T. Buck Construction, Inc.

249 Merrow Road, Auburn, Maine 04210-8319
*(207) 783-6223 * (FAX) 783-3970*

Cofferdam Plan

Vermont Agency of Transportation

Bridge rehabilitation in the town of Jamaica, VT

ER BHF 013-1(16)

STATE OF VERMONT
ERIC T. CALDERWOOD
NO. 8711
Structural
LICENSED
PROFESSIONAL ENGINEER

Submitted: 3/29/13

REVISED PER COMMENTS: 4/22/13

COFFERDAM CONSTRUCTION SEQUANCE

1) **Install filter curtain across river near station 52+00**
2) **Install sand bag/Sheet pile containment cofferdam around excavation in general conformance with sketch C-1**
    a. **The top of the containment cofferdam shall have an elevation at least 672.7 (Q2.33 elevation).**

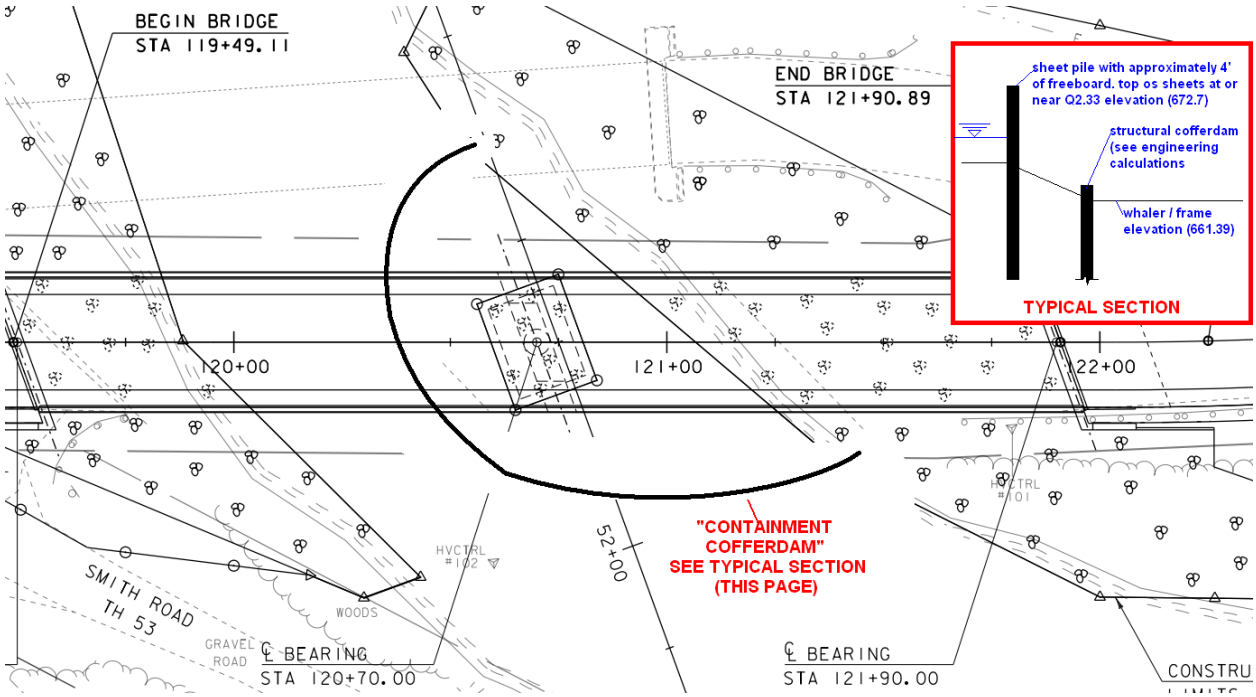

SKETCH C-1

3) **Install access road / crane pad from Abutment 2 area down to pier location.**
    a. **Begin at station 122+00 at elevation near 683 and end at station 120+90 at elevation near 666.0. the slope of the access road will be close to 16%**
    b. **The access road shall be stabilized with existing rip rap**

4) **Install Sheet pile cofferdam**

a. **Pre-excavate trench around perimeter of cofferdam.**

i. **T Buck will utilize a Cat 345D to excavate in front of the installation of the sheet pile.**

ii. **Install frame as template for driving sheets. Elevation of frame will be near 661.39.**

b. **Install sheets in trench in conjunction with pre-excavation. See Sketch C-2**

i. **Sheets will be installed using a Movax attachment on a CAT 328 excavator.**

1. **Sheets will be installed in trench created by the CAT 345D**
2. **Sheets will be vibrated into final location by vibro hammer attached to crane. The borings indicate a very dense silty material located below the footing.**

ii. **See structural cofferdam plan. Stamped by Eric Calderwood of Calderwood Engineering.**

iii. **Top of structural sheet pile should be near than elevation 665.5 (ground elevation of Boring B-104)**

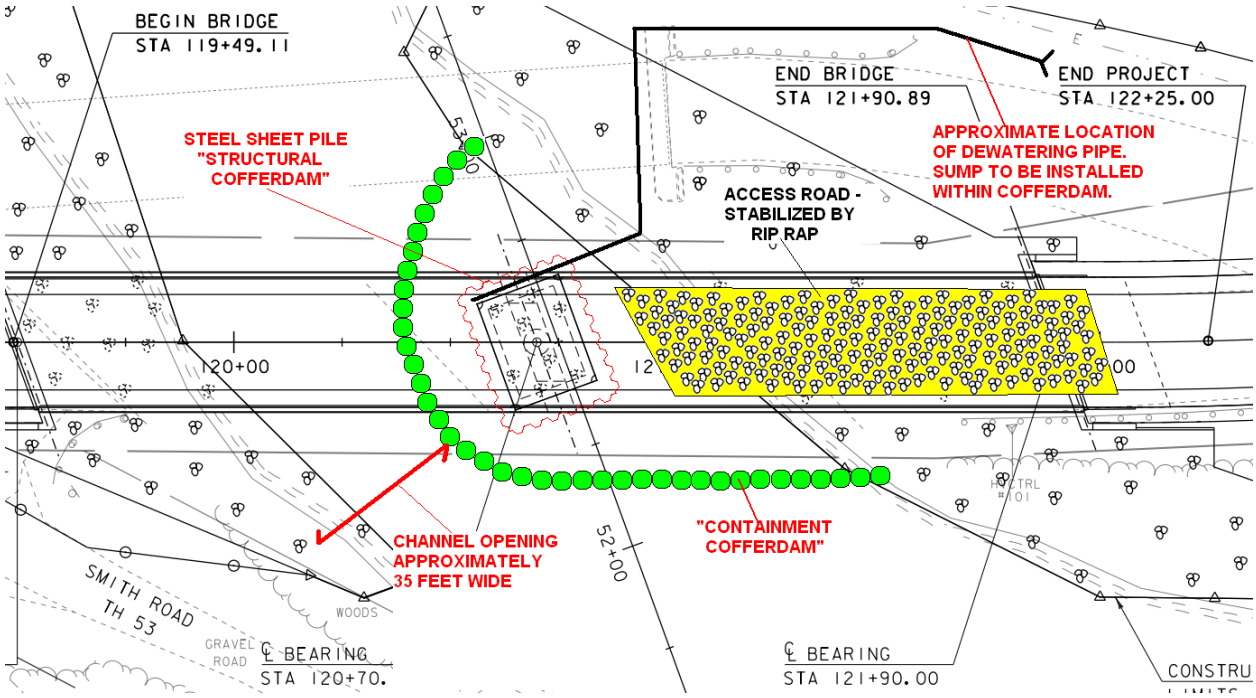

SKETCH C-2

c. **Continue excavation of cofferdam to elevation near 652.0**

d. **Install 12" of crushed stone base**

e. **Drive pile in cofferdam**

5) **Construct Pier**
    a. **Establish sedimentation pond for dewatering purposes.**
        i. **Two 4” pumps will be used as needed in sump holes located within the cofferdam to maintain water level while forming concrete**
    b. **Form / place / strip footing of pier to elevation 658.5**
    c. **Form / place / strip pier stem to elevation 678.5**
    d. **Backfill footing and pier stem using specified materials**

6) **Remove Cofferdam**
    a. **Remove frame prior to finish backfilling**
    b. **Extract sheets using Movax attachment on CAT 328**
    c. **Remove sand bags / sheet pile from river**
        i. **Reinstall filter curtain if necessary before removing containment cofferdam**
    d. **Excavate / shape slope back to Abutment 2 and install type IV stone as specified**

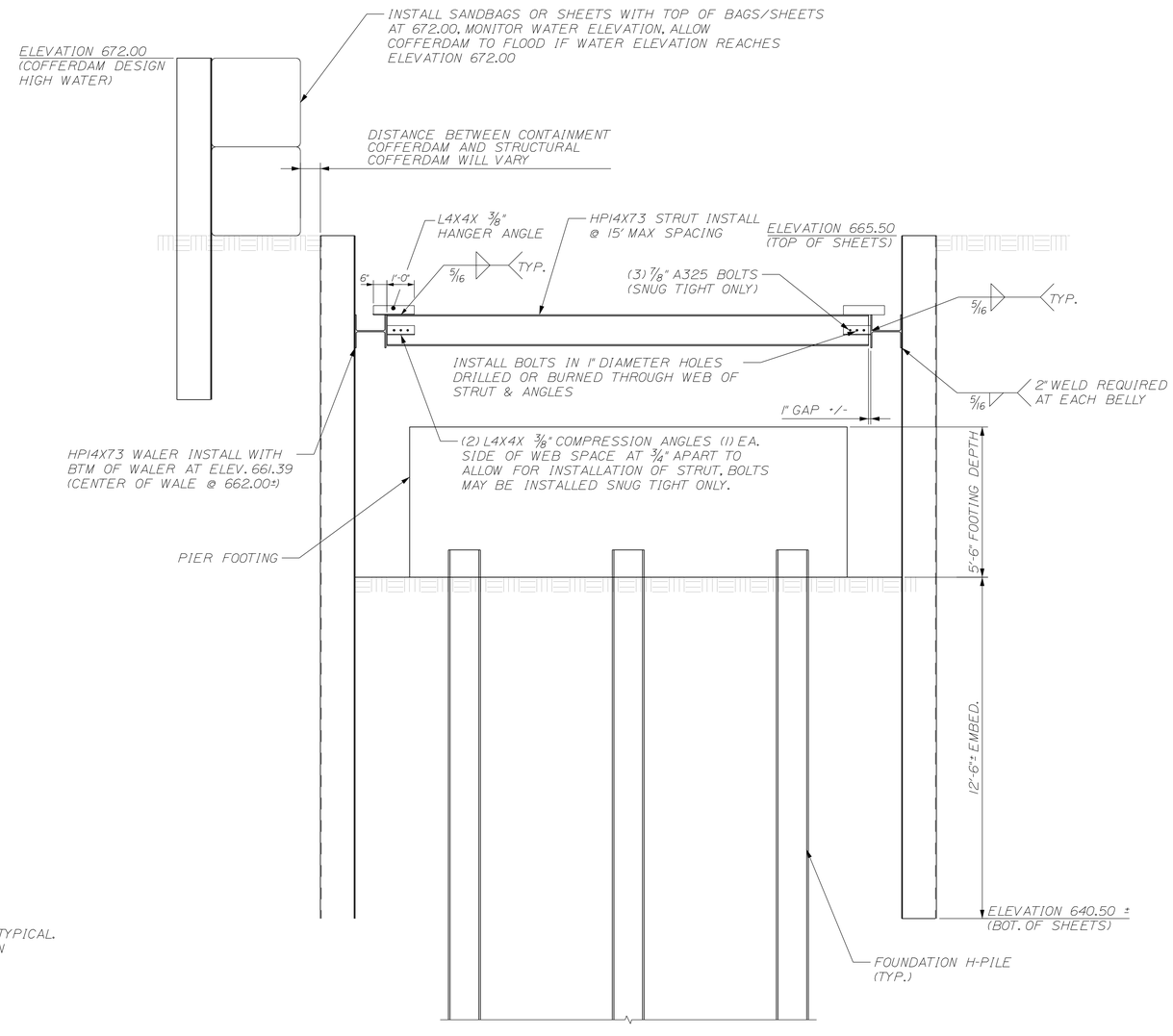

COFFERDAM SECTION

3/8" = 1'-0"

NOTE: STRUT MAY BE WELDED OR BOLTED. BOLTED OPTION SHOWN. SEE DETAILS FOR EACH OPTION ON SHT 2

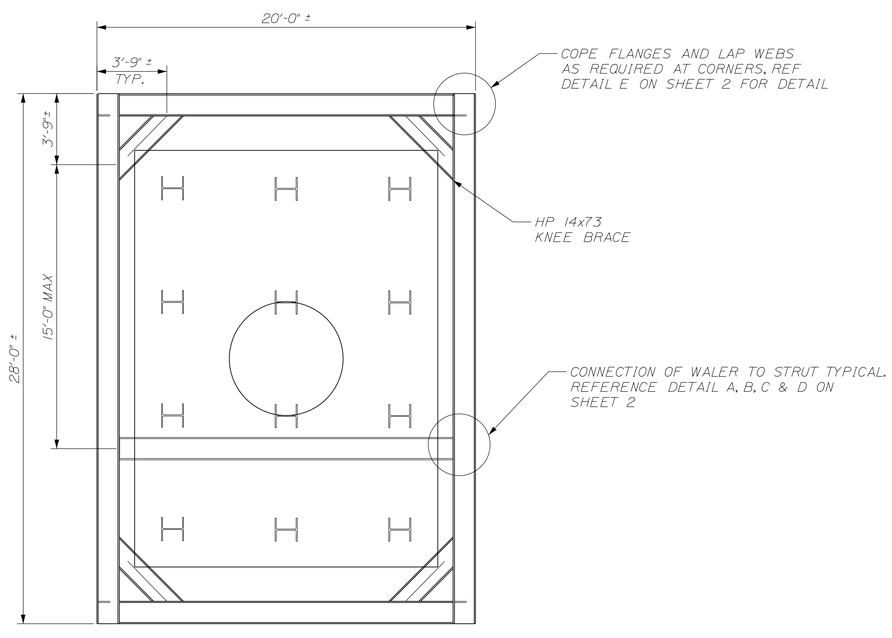

COFFERDAM PLAN VIEW

1/4" = 1'-0"

STRUT MAY BE MOVED AS LONG AS THE UNBRACED LENGTH OF THE WALER DOES NOT EXCEED 15'.

CALDERWOOD ENGINEERING, ETC.
STRUCTURAL ENGINEERING • DETAILING SERVICES
222 RIVER RD, RICHMOND, ME 04357 PH/FX (207)737-2007/(207) 737-2008

PREPARED FOR:
T. BUCK CONSTRUCTION

JAMAICA CEE 091-BR-12

STATE OF MAINE
ERIC T. CALDERWOOD
NO. 8711
STRUCTURAL
LICENSED
PROFESSIONAL ENGINEER

P.E. NUMBER 8711

DATE JAN. 2013

	BY	DATE
DESIGN-DETAILED	GNM	JAN. 12
CHECKED-REVIEWED		
REVISIONS 1		
REVISIONS 2		
REVISIONS 3		
REVISIONS 4		
FIELD CHANGES		

JAMAICA COFFERDAM DETAILS

COFFERDAM PLAN & SECTION

SHEET NUMBER

1

CALDERWOOD ENGINEERING
222 RIVER ROAD
RICHMOND, ME 04357
PH. (207) 737-2007 FAX (207) 737-2008

Filename: ...\091-BR-12_JAMAICA COFFERDAM.dwg Group: Structures Division Username: common Date:3/28/2013

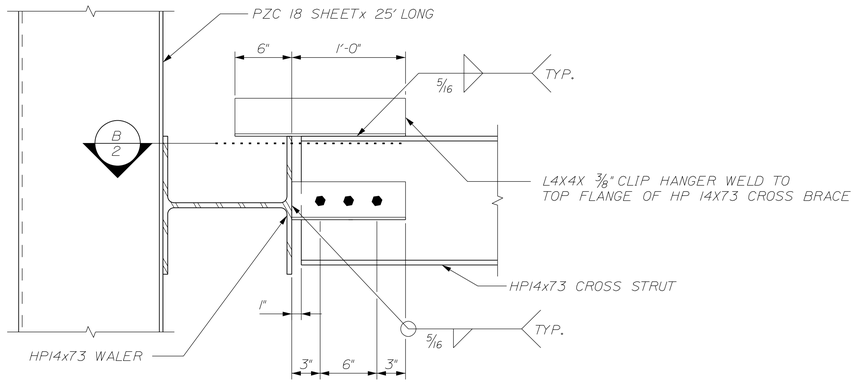

DETAIL A ON SHT 2
BOLTED CONNECTION OPTION

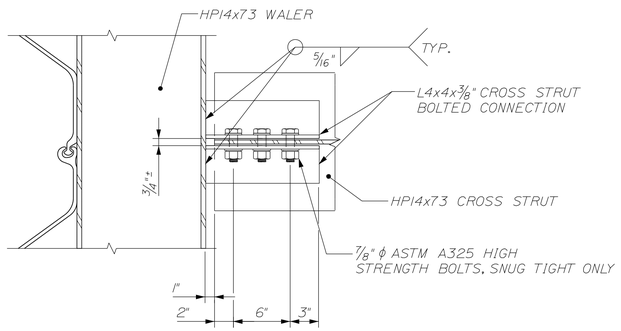

SECTION B ON SHT 2
BOLTED CONNECTION OPTION

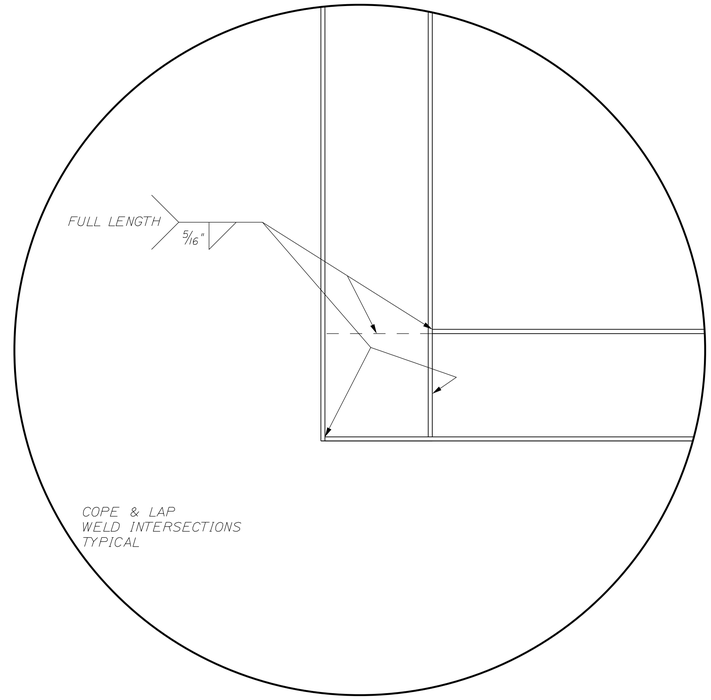

DETAIL E ON SHEET 2 (TYPICAL CORNER CONNECTIONS

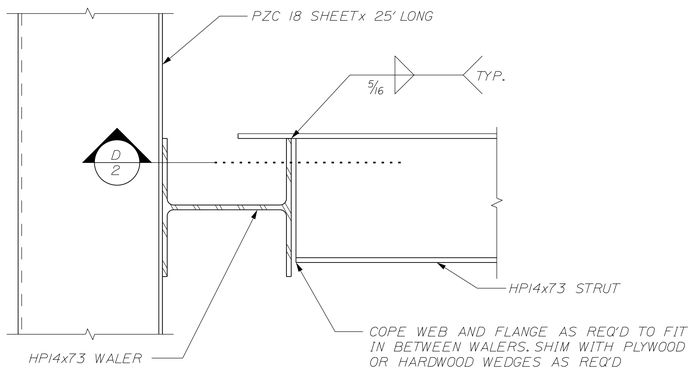

DETAIL C ON SHT 2
WELDED CONNECTION OPTION

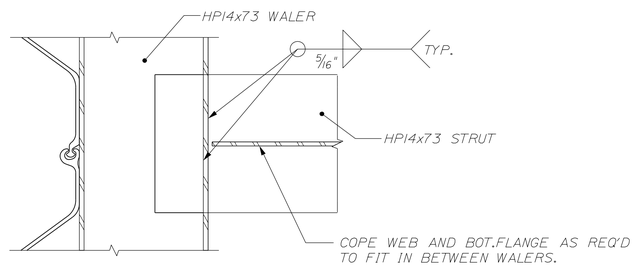

SECTION D ON SHT 2
WELDED CONNECTION OPTION

GENERAL NOTES

1. All H-Pile to be Grade 50 Material

2. ALL WELDING SHALL BE DONE BY CERTIFIED WELDERS QUALIFIED IN THE PROCEDURE AND PROCESS REQUIRED.

3. ALL ELECTRODES SHALL BE E70XX

4. ALL BOLTS SHALL BE ASTM A325

5. ALL ANGLE AND PLATE STEEL SHALL BE ASTM A36.

6. THESE DETAILS HAVE BEEN DEVELOPED FOR THE SOLE USE OF T BUCK CONSTRUCTION INC. FOR THE CONSTRUCTION OF THE PIER ON THE VERMONT AGENCY OF TRANSPORTATION JAMAICA PROJECT ER-BRF-013-1(16) ANY OTHER USE OF THESE DETAILS WITHOUT THE EXPRESSED WRITTEN CONSENT OF T BUCK CONSTRUCTION, INC AND CALDERWOOD ENGINEERING IS STRICTLY PROHIBITED.

7. THESE DETAILS ARE INTENDED TO BE WORKED WITH THE CONTRACT DOCUMENTS FOR THE JAMAICA PROJECT BY VERMONT AGENCY OF TRANSPORTATION LISTED IN NOTE #6 AND ARE NOT INTENDED TO BE WORKED ALONE.

8. REPORT ANY DISCREPANCY BETWEEN THESE PLANS AND ACTUAL OBSERVED FIELD CONDITIONS TO THE COFFERDAM ENGINEER OF RECORD IMMEDIATELY. DO NOT PROCEED WITH ANY DEPENDENT WORK UNTIL ANY SUCH REPORTED DISCREPANCY IS CORRECTED TO THE SATISFACTION OF THE COFFERDAM ENGINEER OF RECORD

9. STRUTS ARE INTENDED TO BE IN PLACE DURING EXCAVATION WITHIN THE COFFER, AND AT ALL TIMES ONCE THE FOOTING IS PLACED AND THE COFFERDAM PUMPED. SPACING OF CROSS STRUTS SHALL NOT EXCEED THE 15' AS SHOWN HEREIN. REMOVAL OF THE STRUTS SHALL BE ALLOWED ONCE THE COFFERDAM IS FILLED WITH SOIL UP TO OR BEYOND EL. 659.5. DUE TO SOIL PRESSURE AND STRESS ON BOLTS, CROSS STRUTS AND OR CONNECTION ANGLES MAY NEED TO BE CUT OFF TO ALLOW REMOVAL.

CALDERWOOD ENGINEERING, ETC.
STRUCTURAL ENGINEERING • DETAILING SERVICES
222 RIVER RD, RICHMOND, ME 04357 PH/FX (207)737-2007/(207) 737-2008

PREPARED FOR:
T. BUCK CONSTRUCTION

JAMAICA CEE 091-BR-12

STATE OF VERMONT
ERIC T. CALDERWOOD
NO. 8739
STRUCTURAL
LICENSED
PROFESSIONAL ENGINEER

P.E. NUMBER 8739
DATE MON. 20YYD

	BY	DATE
DESIGN-DETAILED	GNM	JAN. 12
CHECKED-REVIEWED		
REVISIONS 1		
REVISIONS 2		
REVISIONS 3		
REVISIONS 4		
FIELD CHANGES		

JAMAICA COFFERDAM DETAILS

COFFERDAM DETAILS

SHEET NUMBER
2

CALDERWOOD ENGINEERING
222 RIVER ROAD
RICHMOND, ME 04357
PH. (207) 737-2007 FAX (207) 737-2008

Filename: ...\091-BR-12_JAMAICA COFFERDAM.dgn Structures Division Username: common Date:3/28/2013

Cofferdam Design Calculations
For
Jamaica

Jamaica, VT
Vermont Agency of Transportation
Project ER-BRF-013-1(16)
CEE 091-BR-12

STATE OF VERMONT
ERIC T. CALDERWOOD
1/14/13
NO. 9711
Structural
LICENSED
PROFESSIONAL ENGINEER

Prepared for:

T Buck Construction

By:
Calderwood Engineering etc
January 14th, 2013

CALDERWOOD ENGINEERING ETC, LLC
222 RIVER ROAD
RICHMOND, ME 04357
PH. (207) 737-2007 FAX (207) 737-2008
www.calderwoodengineering.com

JOB 091-bc-12
SHEET NO. 1 OF 22
CALCULATED BY GNM DATE 1/13
CHECKED BY DATE
SCALE

Check Soil inside Cofferdam is enough to resist Hydrostatic Pressure

Top of Water EL. = 672.0'
Top of Ground EL. = 665.5'
Bottom of Footing EL. = 653.0'

Use $\gamma_{H_2O} = 62.4\ lbs/ft^3$ $\gamma_{soil} = 120\ lbs/ft^3$

Consider Soil inside Cofferdam to be Saturated

$\gamma_{soil\ sat} = 100\ lbs/ft^3$

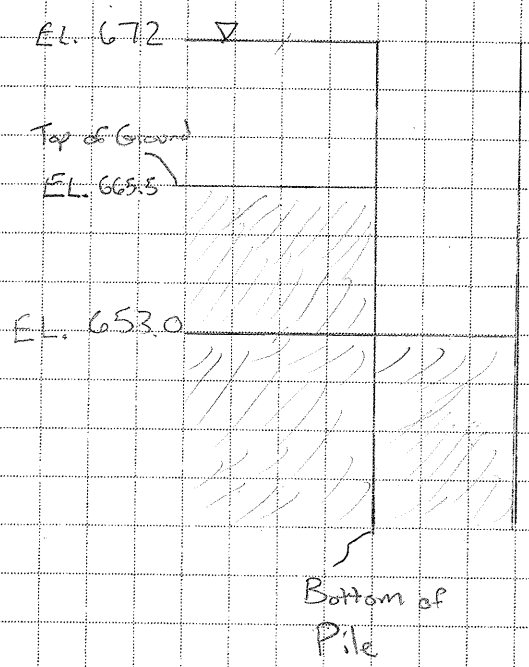

Soil Wt must Resist
EL. 672 - EL. 653.0 = 19 ft of Head

$(62.4\ lbs/ft)(19\ ft) = 1185.6\ lbs$

Depth of Soil Req'd
$= 1185.6\ lbs / 100\ lbs/ft = 11.9\ ft$ of Soil

∴ Bottom of Sheets Must Reach to
EL 653 - 11.9 = 641.1' (Min)

2/22

Table 3-2
Ratio of ϕ/δ (After Allen, Duncan, and Snacio 1988)

Soil Type	Steel	Wood	Concrete
Sand	$\delta/\phi = 0.54$	$\delta/\phi = 0.76$	$\delta/\phi = 0.76$
Silt & Clay	$\delta/\phi = 0.54$	$\delta/\phi = 0.55$	$\delta/\phi = 0.50$

Table 3-3
Values of δ for Various Interfaces
(after U.S. Department of the Navy 1982)

Soil Type	δ (deg)
(a) Steel sheet piles	
Clean gravel, gravel sand mixtures, well-graded rockfill with spalls	22
Clean sand, silty sand-gravel mixture, single-size hard rockfill	17 Use
Silty sand, gravel or sand mixed with silt or clay	14
Fine sandy silt, nonplastic silt	11
(b) Concrete sheet piles	
Clean gravel, gravel sand mixtures, well-graded rockfill with spalls	22-26
Clean sand, silty sand-gravel mixture, single-size hard rockfill	17-22
Silty sand, gravel or sand mixed with silt or clay	17
Fine sandy silt, nonplastic silt	14

Table 3-4
Correlation of Undrained Shear Strength of Clay (q_u=2c)

Consistency	qu (psf)	SPT (blows/ft)	Saturated Unit Weight (psf)
Very Soft	0-500	0-2	<100-110
Soft	500-1,000	3-4	100-120
Medium	1,000-2,000	5-8	110-125
Stiff	2,000-4,000	9-16	115-130
Very Stiff	4,000-8,000	16-32	120-140
Hard	>8,000	>32	>130

(5) Since an undrained condition may be expected to occur under "fast" loading in the field, it represents a "short-term" condition; in time, drainage will occur, and the drained strength will govern (the "long-term" condition). To model these conditions in the laboratory, three types of tests are generally used; unconsolidated undrained (Q or UU), consolidated undrained (R or CU), and consolidated drained (S or CD). Undrained shear strength in the laboratory is determined from either Q or R tests and drained shear strength is established from S tests or from consolidated undrained tests with pore pressure measurements ($\bar{R}$).

(6) The undrained shear strength, S_u, of a normally consolidated clay is usually expressed by only a cohesion intercept; and it is labeled c_u to indicate that ϕ was taken as zero. c_u decreases dramatically with water content; therefore, in design it is common to consider the fully saturated condition even if a clay is partly saturated in the field. Typical undrained shear strength values are presented in Table 3-4. S_u increases with depth (or effective stress) and this is commonly expressed with the ratio "S_u/p" (p denotes the effective vertical stress). This ratio correlates roughly with plasticity index and overconsolidation ratio (Figures 3-2, 3-3, respectively). The undrained shear strength of many overconsolidated soils is further complicated due to the presence of fissures; this leads to a lower field strength than tests on small laboratory samples indicate.

(7) The drained shear strength of normally consolidated clays is similar to that of loose sands ($c' = O$), except that ϕ is generally lower. An empirical correlation of the effective angle of internal friction, ϕ', with plasticity index for normally consolidated clays is shown in Figure 3-4. The drained shear strength of over-consolidated clays is similar to that of dense sands (again with lower ϕ'), where there is a peak strength (c' nonzero) and a "residual" shear strength ($c' = O$).

(8) The general approach in solving problems involving clay is that, unless the choice is obvious, both undrained and drained conditions are analyzed separately. The more critical condition governs the design. Total stresses are used in an analysis with undrained shear strength (since pore pressures are "included" in the undrained shear strength) and effective stresses in a drained case; thus such analyses are usually called total and effective stress analyses, respectively.

(9) At low stress levels, such as near the top of a wall, the undrained strength is greater than the drained

FROM USACE EM1110-2-2504

$\phi \approx 28 + n/4$

w/ $\delta = 17°$ Use $\phi = 32°$ $\beta = 0°$ 3/22

$\delta/\phi = 17/32 = 0.531$ $R = 0.746$

$K_p = 8 \times R = (8)(0.746) = 5.97$

REDUCTION FACTOR (R) OF K_p FOR VARIOUS RATIOS OF $-\delta/\phi$

ϕ \ δ/ϕ	−0.7	−0.6	−0.5	−0.4	−0.3	−0.2	−0.1	−0.0
10	.978	.962	.946	.929	.912	.898	.881	.864
15	.961	.934	.907	.881	.854	.830	.803	.775
20	.939	.901	.862	.824	.787	.752	.716	.678
25	.912	.860	.808	.759	.711	.666	.620	.574
30	.878	.811	.746	.686	.627	.574	.520	.467
35	.836	.752	.674	.603	.536	.475	.417	.362
40	.783	.682	.592	.512	.439	.375	.316	.262
45	.718	.600	.500	.414	.339	.276	.221	.174

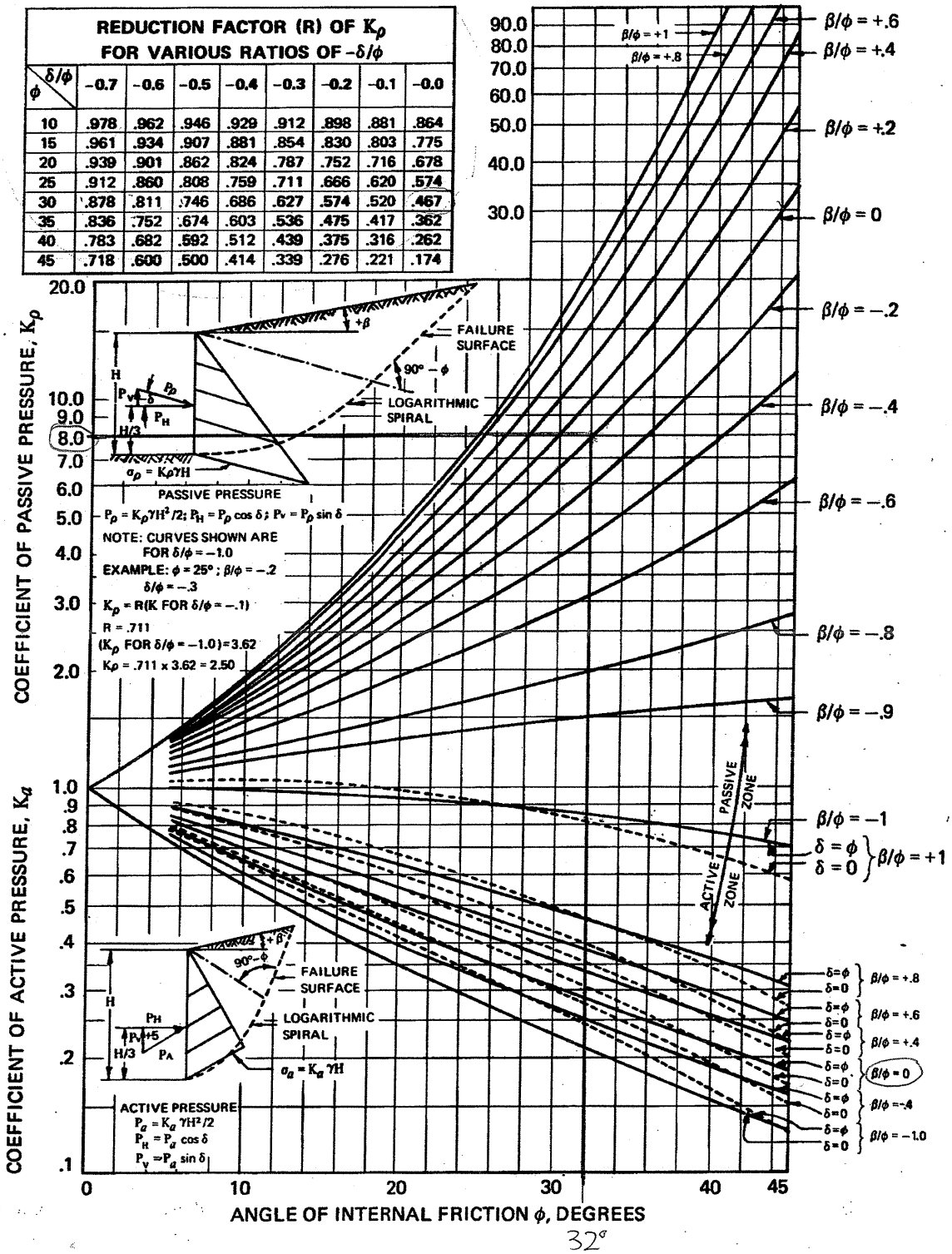

Fig. 5(a) — Active and passive coefficients with wall friction (sloping backfill) (after Caquot and Kerisel[21])

$K_a = 0.30$

CALDERWOOD ENGINEERING ETC, LLC
222 RIVER ROAD
RICHMOND, ME 04357
PH. (207) 737-2007 FAX (207) 737-2008
www.calderwoodengineering.com

Check Sheet Stability

Hydrostatic Water Pressure → Starts EL. 672.0

$62.4^{lbs}/ft^3$ (")

Active Soil Pressure → Starts @ EL. 665.5

$P = K_a \gamma_{soil}$ $K_a = 0.3$ $\gamma_{soil} = 120^{lbs}/ft^3 - 62.4^{lbs}/ft^3 = 57.6^{lbs}/ft^3$

$P = (0.3)(57.6^{lbs}/ft^3) = 17.3^{lbs}/ft^3$

$P_H = P\cos\delta = 17.3^{lbs}/ft^3 \cos 17 = 16.5^{lbs}/ft$

Passive Soil Pressure → Starts @ EL 653.0

$P = K_{net}\gamma_{soil}$ $K_{net} = 5.97 - 0.3 = 5.67$ $\gamma_{soil} = 57.6^{lbs}/ft^3$

$P = (5.67)(57.6) = 326.6^{lbs}/ft^3$

$P_H = P\cos\delta = (326.6)(\cos 17) = 312.3^{lbs}/ft^3$

Hydro Pressure @ (Ground) Level (EL. 665.5)

$(62.4^{lbs}/ft)(EL.\ 672 - 665.5) = 405.6^{lbs}/ft^2$

Pressure From EL. 665.5 to EL. 653.0 (Bottom of Footing)

$[(62.4^{lbs}/ft^3) + (16.5^{lbs}/ft)](1/2)(665.5-653)^2 + (405.6)(665.5-653) = 11234.1^{lbs}/ft$

At EL. 653.0 Hydrostatic Pressure is 0 (No Hydro Differential Pressure)
Pressure will Reduce @ rate = $312.3^{lbs}/ft^3$ to the end of the sheet.

CALDERWOOD ENGINEERING ETC, LLC
222 RIVER ROAD
RICHMOND, ME 04357
PH. (207) 737-2007 FAX (207) 737-2008
www.calderwoodengineering.com

From Multiple Iterations The Rebar's Reaction At Strut Located 3.5 ft from the top of the Shaft

$R = 9,860.5$ lbs/ft

Look At Shaft As Simply Supported Between the Passive Earth Pressure and the Reaction @ Strut.

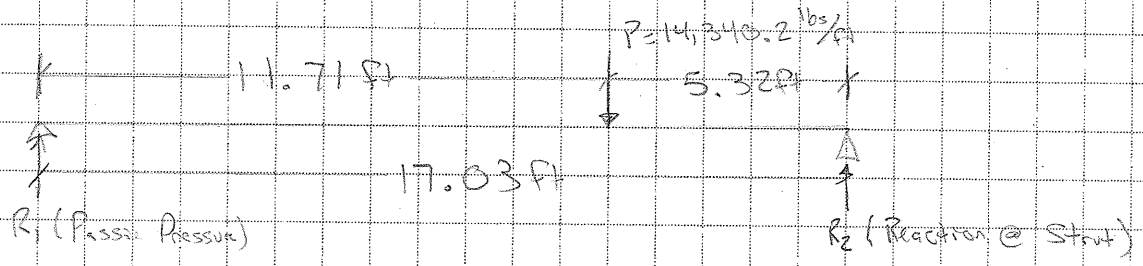

$\Sigma M_{R_1} = 0 \rightarrow (14,340.2 \text{ lbs/ft})(11.71 \text{ ft}) - R_2(17.03 \text{ ft}) = 0$

$R_2 = 9,860.5$ lbs/ft

$\Sigma F_y = 0 \rightarrow R_1 - 14,340.2 + 9,860.5 = 0$

$R_1 = 4,479.7$ lbs/ft

Check Depth of Passive Pressure to Attain R_1

$4,479.7 \text{ lbs/ft} = \frac{1}{2}(3,123 \text{ lbs/ft}^3)(z)^2$

$z = 5.36$ ft

The Resultant will Act $(2)(5.36)/3 = 3.57$ ft Below Pt of Zero Shear

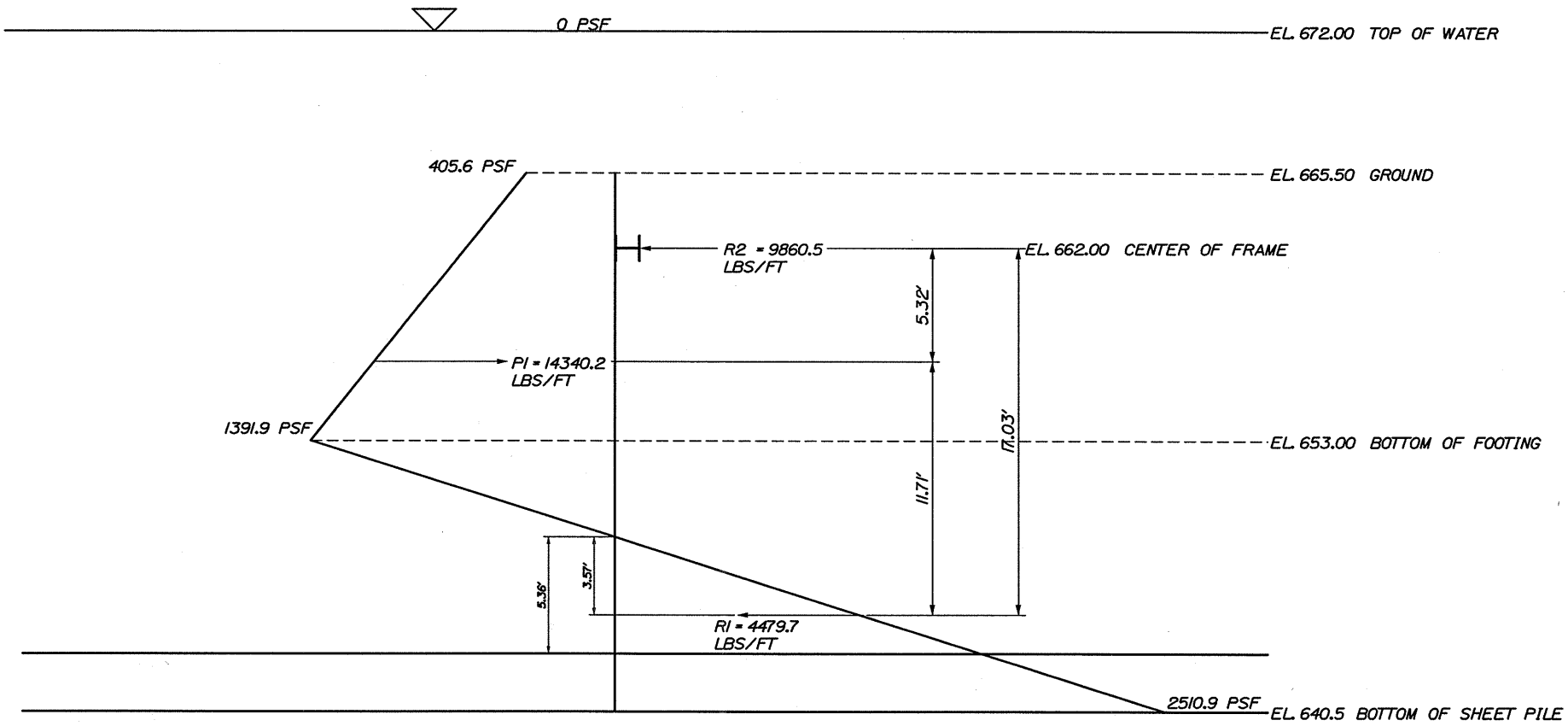
0 PSF
EL. 672.00 TOP OF WATER
405.6 PSF
EL. 665.50 GROUND
R2 = 9860.5
LBS/FT
EL. 662.00 CENTER OF FRAME
5.32'
P1 = 14340.2
LBS/FT
1391.9 PSF
17.03'
EL. 653.00 BOTTOM OF FOOTING
11.71'
5.36'
3.57'
R1 = 4479.7
LBS/FT
2510.9 PSF
EL. 640.5 BOTTOM OF SHEET PILE

9/22

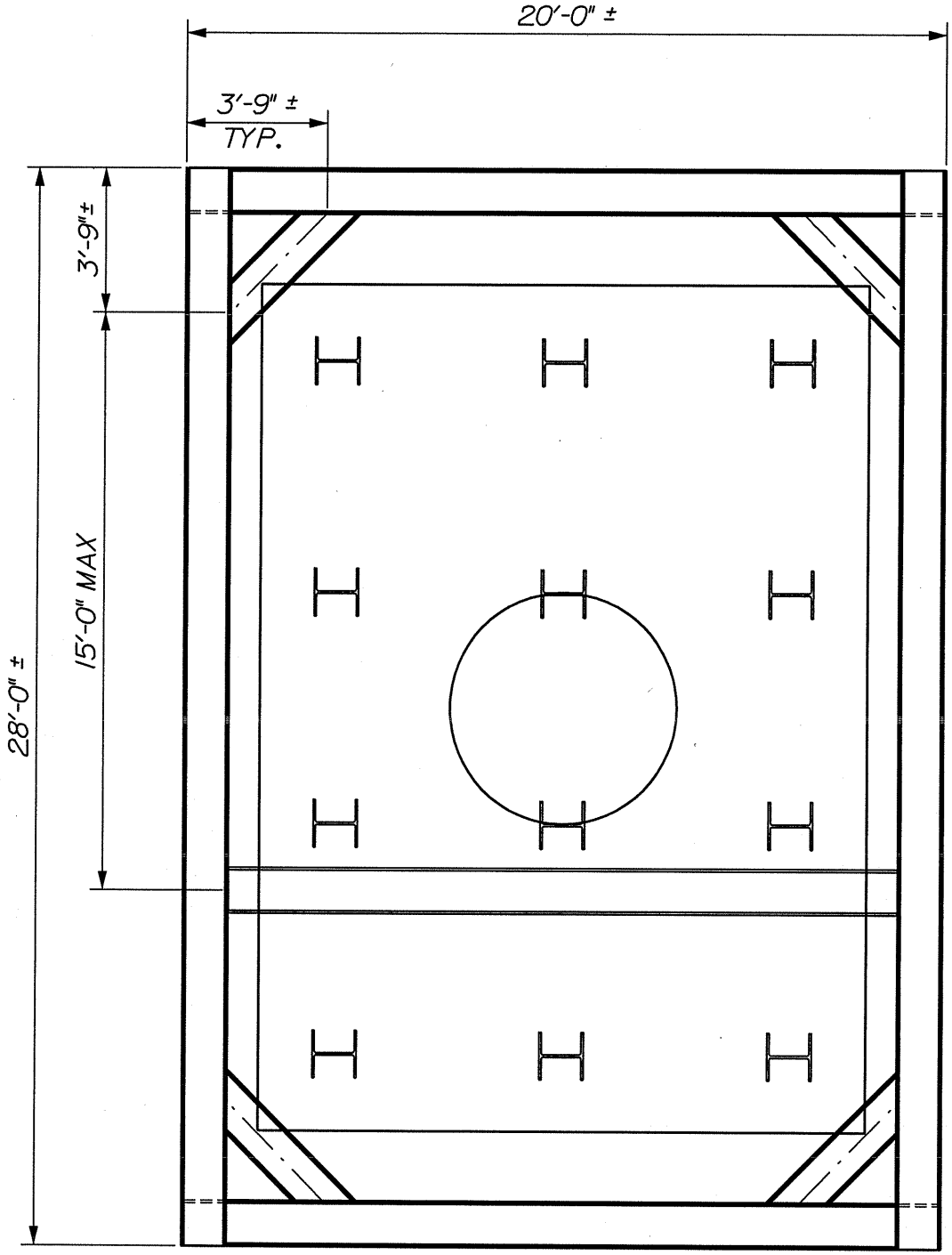

STRUT MAY BE MOVED AS LONG AS THE UNBRACED LENGTH OF THE WALER DOES NOT EXCEED 15'.

BEAMBOY V2.2 REPORT

Frame Bending and Reactions

BEAM PROPERTIES

Beam Length = 28 ft.
Moment of Inertia = 729 in^4
Modulus of Elasticity = 29000000 psi
Distance From Neutral Axis to Furthest Fiber = 7 in.

LOAD CONFIGURATION

Point Loads

Distributed Loads

Start=9860 lb./ft., x=0 ft.; End=9860 lb./ft., x=28 ft.

Moments

Supports

Simple support; 0 ft., Reaction=-25000 lb. R_1
Simple support; 3.75 ft., Reaction=136000 lb. R_2
Simple support; 18.8 ft., Reaction=132000 lb. R_3
Simple support; 24.2 ft., Reaction=9680 lb. R_4
Simple support; 28 ft., Reaction=23000 lb. R_5

Max Compression in 20' Water

$P = (15ft/2 + 3.5ft)(9{,}860\ lbs/ft) = 108{,}460\ lbs = 108.46^k$

MAXIMUM VALUES

Maximum Bending Moment = -163000 lb.-ft. at x=3.75 ft.
Maximum Bending Stress = 18.8 ksi at x=3.75 ft.
Maximum Deflection = -0.165 in. at x=11.3 ft.
Maximum Slope = 0.151 degrees at x=16.2 ft.

$M_u = 163^{k\text{-}ft} = 1956^{k\text{-}in}$

(Bending Moment in 28'-0" Frame Member)

1/15/2013

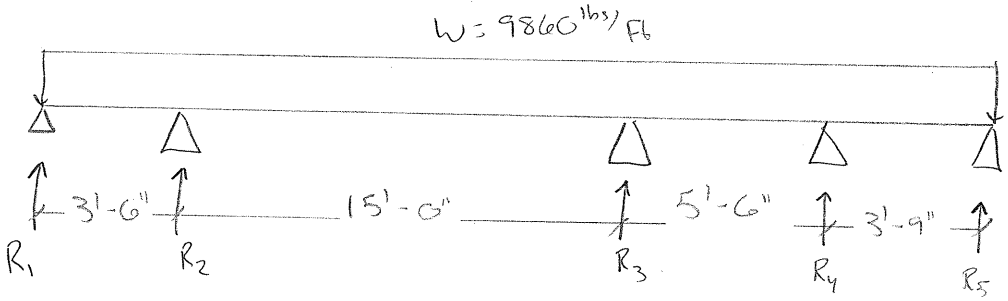

BEAMBOY V2.2 REPORT

Frame Bending and Reactions

BEAM PROPERTIES

Beam Length = 20 ft.
Moment of Inertia = 729 in^4
Modulus of Elasticity = 29000000 psi
Distance From Neutral Axis to Furthest Fiber = 7 in.

LOAD CONFIGURATION

Point Loads

Distributed Loads

Start=9860 lb./ft., x=0 ft.; End=9860 lb./ft., x=20 ft.

Moments

Supports

Simple support; 0 ft., Reaction=-10800 lb.
Simple support; 3.75 ft., Reaction=109000 lb.
Simple support; 16.2 ft., Reaction=109000 lb.
Simple support; 20 ft., Reaction=-10800 lb.

Max Axial Load Seen by 28'-0" Water

(9860 lbs/ft)(10 ft) = 98.6 k (This is because the knee brace transfers the reaction to the water)

MAXIMUM VALUES

Maximum Bending Moment = -110000 lb.-ft. at x=16.2 ft.
Maximum Bending Stress = 12.7 ksi at x=16.2 ft.
Maximum Deflection = -0.0808 in. at x=10 ft.
Maximum Slope = -0.0881 degrees at x=5.9 ft.

$M_u = 110.0^{k\text{-}ft} = 1320.0^{k\text{-}in}$

Bending Moment in 20 ft Frame Member

1/15/2013

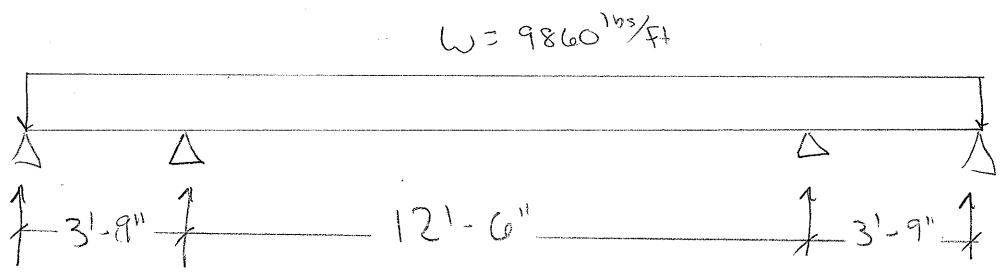

CALDERWOOD ENGINEERING ETC, LLC
222 RIVER ROAD
RICHMOND, ME 04357
PH. (207) 737-2007 FAX (207) 737-2008
www.calderwoodengineering.com

Look @ Frame in Bending

$M_{max} = 1956^{k\text{-}in}$ (Along 28'-0" Side)

$l_b = 15\,ft$ (Along 26'-0" Side)

$L_b = 15\,ft = 180\,in$

Try Using HP 14x73 for Frame, Grade 50 $F_y = 50^{ksi}$

$d = 13.6\,in$ $t_f = 0.505\,in$ $b_f = 14.6\,in$ $t_w = 0.505\,in$ $S = 107\,in^3$

$$L_c = \min\begin{cases} \dfrac{76\,b_f}{\sqrt{F_y}} = \dfrac{(76)(14.6)}{\sqrt{50}} = 156.9\,in \leftarrow \text{Controls} \\ \dfrac{20{,}000}{(d/A_f)F_y} = \dfrac{20{,}000}{(13.6/(14.6)(0.505))\,50} = 216.9\,in \end{cases}$$

F1-2 (AISC 9th)

$A_f = t_f b_f = (0.505\,in)(14.6) = 7.37\,in^2$

1/3 depth of Compression flange $= \dfrac{d-(2)t_f}{6} = \dfrac{(13.6)-2(0.505)}{6} = 2.10\,in$

$A_T = 7.37\,in^2 + (2.10\,in)(0.505\,in) = 8.43\,in^2$

$I = \dfrac{(0.505)(14.6)^3}{12} + \dfrac{(2.10)(0.505)^3}{2} = 131.0\,in^4$ (Moment of Inertia of top flange and 1/3 web depth in Compression in the y-axis)

$r_T = \sqrt{I/A} = \sqrt{131.0/8.43} = 3.94\,in$

$l/r_T = 180/3.94 = 45.7$

$\sqrt{\dfrac{102\times10^3}{50}} = 45.2 < l/r_T < \sqrt{\dfrac{510\times10^3}{50}} = 101$ AISC 9th (F1-6)

CALDERWOOD ENGINEERING ETC, LLC
222 RIVER ROAD
RICHMOND, ME 04357
PH. (207) 737-2007 FAX (207) 737-2008
www.calderwoodengineering.com

Since $\sqrt{\frac{12\times10^3}{F_y}} < \ell_d/r_T \leq \sqrt{\frac{510\times10^3}{F_y}}$

Use (F1-6)

$$F_b = \left[\frac{2}{3} - \frac{F_y(\ell_d/r_T)^2}{1530\times10^3}\right]F_y \leq 0.6F_y \qquad (F1\text{-}6)$$

$$F_b = \left[\frac{2}{3} - \frac{(50)(43.7)^2}{1530\times10^3}\right]50 = 29.9^{ksi}$$

OR

$$F_b = \frac{12\times10^3}{\ell d/A_f} \leq 0.6F_y \qquad (F1\text{-}8) \qquad 0.6(50) = 30^{ksi}$$

$$\frac{12\times10^3}{(180)(36)/7.5} = 36.1^{ksi} > 30^{ksi}$$

$\therefore F_b = 29.9^{ksi}$ Controls

$$f_b = M_u/S = \frac{1950^{k\text{-}in}}{107^{in^3}} = 18.28^{ksi} < 29.9^{ksi} \checkmark \text{ ok}$$

Capacity of Steel Columns

(per AISC 9th Ed) HP 14x73

F_y 50 ksi r_{xx} 5.84 in

C_C 106.9987 r_{yy} 3.49 in

	xx	xx	xx	kℓ/r	F_a	Axial	YY	YY	YY	kℓ/r	F_a	Axial
area	k	ℓ	r				k	ℓ	r			
21.4	1	10	5.84	1.712329	29.88855	639.6149	1	10	3.49	2.86533	29.80967	637.927
21.4	1	20	5.84	3.424658	29.77032	637.0848	1	20	3.49	5.730659	29.60061	633.453
21.4	1	30	5.84	5.136986	29.64544	634.4123	1	30	3.49	8.595989	29.37338	628.5903
21.4	1	40	5.84	6.849315	29.51403	631.6002	1	40	3.49	11.46132	29.12854	623.3508
21.4	1	50	5.84	8.561644	29.37621	628.6509	1	50	3.49	14.32665	28.86663	617.7458
21.4	1	60	5.84	10.27397	29.2321	625.567	1	60	3.49	17.19198	28.58814	611.7861
21.4	1	70	5.84	11.9863	29.08182	622.3509	1	70	3.49	20.05731	28.29355	605.4821
21.4	1	80	5.84	13.69863	28.92547	619.005	1	80	3.49	22.92264	27.98334	598.8434
21.4	1	90	5.84	15.41096	28.76316	615.5317	1	90	3.49	25.78797	27.65791	591.8794
21.4	1	100	5.84	17.12329	28.595	611.9331	1	100	3.49	28.6533	27.31769	584.5986
21.4	1	110	5.84	18.83562	28.42109	608.2114	1	110	3.49	31.51862	26.96305	577.0093
21.4	1	120	5.84	20.54795	28.24153	604.3688	1	120	3.49	34.38395	26.59434	569.1189
21.4	1	130	5.84	22.26027	28.05641	600.4073	1	130	3.49	37.24928	26.21189	560.9345
21.4	1	140	5.84	23.9726	27.86583	596.3288	1	140	3.49	40.11461	25.81601	552.4625
21.4	1	150	5.84	25.68493	27.66987	592.1353	1	150	3.49	42.97994	25.40695	543.7088
21.4	1	160	5.84	27.39726	27.46863	587.8286	1	160	3.49	45.84527	24.98498	534.6786
21.4	1	170	5.84	29.10959	27.26217	583.4105	1	170	3.49	48.7106	24.55031	525.3767
21.4	1	180	5.84	30.82192	27.05059	578.8826	1	180	3.49	51.57593	24.10314	515.8072

$P_{allow} = 515.8^k$

Use $P = 108.46^k$, Conservative since this Compression load is on 20' Frame Member

$f_a = 24.1^{ksi}$

$f_a = 108.46 / 21.4^{in^2} = 5.07^{ksi} < F_a$ ✓ ok

CALDERWOOD ENGINEERING ETC, LLC
222 RIVER ROAD
RICHMOND, ME 04357
PH. (207) 737-2007 FAX (207) 737-2008
www.calderwoodengineering.com

Check HP 14x73 in Combine Axial + Bending

$F_a = 24.1^{ksi}$ $F_b = 29.9^{ksi}$

$f_a = 5.07^{ksi}$ $f_b = 18.28^{ksi}$

$f_a / F_a = 5.07 / 24.1 = 0.21 > 0.15$

∴ Check EQ H1-1 + H1-2

$F'_e = \frac{12\pi^2 E}{23(Kl/r)^2}$ Use $K = 1.0$ $l = 180 in$ $r = r_y = 3.49 in$

$Kl/r = 180/3.49 = 51.6$

$F'_e = \frac{(12)\pi^2(29{,}000)}{23(51.6)^2} = 56.1^{ksi}$

$\frac{f_a}{F_a} + \frac{f_b}{\left(1 - \frac{f_a}{F'_{ex}}\right)F_b} \leq 1.0 = 0.21 + \frac{18.28}{\left(1 - \frac{5.07}{56.1}\right)29.9} = 0.882 < 1.0$ (H1-1) ✓

$\frac{f_a}{0.6F_y} + \frac{f_b}{F_b} = \frac{5.07^{ksi}}{(0.6)(50)} + \frac{18.28}{29.9} = 0.78 < 1.0$ ✓ ok

∴ Use HP 14x73 for Frame members. The max moment and Axial Compression used looked @ on a single member w/ max unbraced length which do not all occur on the same member ∴ Conservative

CALDERWOOD ENGINEERING ETC, LLC
222 RIVER ROAD
RICHMOND, ME 04357
PH. (207) 737-2007 FAX (207) 737-2008
www.calderwoodengineering.com

Look @ Interior Strut In Compression

Try Using HP 14x73

Conservatively Take Lb = 20 ft = 240 in

Worst Case, Interior Strut Centered, Trib width = 10'-3" = 10.25 ft

$P = (9860\ lbs/ft)(10.25\ ft) = 101{,}065\ lbs = 101.1^k$

$C_c = \sqrt{\frac{2\pi^2(29{,}000)}{50}} = 107\ in$

$r_x = 5.84\ in$ $r_y = 3.49\ in$ Use $K = 1.0$

$Kl/r = 240/3.49 = 68.8 < C_c$

$\therefore F_a = \frac{\left[1 - \frac{68.8^2}{2(107)^2}\right]50}{5/3 + \frac{3(68.8)}{8(107)} - \frac{(68.8)^3}{8(107)^3}} = \frac{39.66}{1.87} = 21.2\ ksi$

$f_a = P/A = \frac{101.1^k}{21.4\ in^2} = 4.72\ ksi < 21.2\ ksi$ ✓ ok in Compression

$\therefore$ Ok to Use HP 14x73 As Strut Member.

Knee Braces ok by Inspection

Try Connecting Interior Strut by Bolting (3) 7/8" ϕ Bolt to (2) L4x4x3/8

Capacity of Steel Columns

(per AISC 9th Ed)

L 4x4x3/8

F_y 36 ksi r_{zz} 0.788 in

C_c 126.0992 r_{yy} 1.52 in

	ZZ	ZZ	ZZ	kl/r	F_a	Axial	YY	YY	YY	kl/r	F_a	Axial
area	k	l	r				k	l	r			
5.72	1	1	0.788	1.269036	21.55011	123.2666	1	1	1.52	0.657895	21.57438	123.4055
5.72	1	2	0.788	2.538071	21.49828	122.9702	1	2	1.52	1.315789	21.54824	123.2559
5.72	1	3	0.788	3.807107	21.44453	122.6627	1	3	1.52	1.973684	21.52157	123.1034
5.72	1	4	0.788	5.076142	21.38888	122.3444	1	4	1.52	2.631579	21.49438	122.9479
5.72	1	5	0.788	6.345178	21.33135	122.0153	1	5	1.52	3.289474	21.46668	122.7894
5.72	1	6	0.788	7.614213	21.27197	121.6757	1	6	1.52	3.947368	21.43847	122.628
5.72	1	7	0.788	8.883249	21.21076	121.3255	1	7	1.52	4.605263	21.40974	122.4637
5.72	1	8	0.788	10.15228	21.14774	120.965	1	8	1.52	5.263158	21.38052	122.2965
5.72	1	9	0.788	11.42132	21.08292	120.5943	1	9	1.52	5.921053	21.35078	122.1265
5.72	1	10	0.788	12.69036	21.01634	120.2135	1	10	1.52	6.578947	21.32055	121.9535
5.72	1	11	0.788	13.95939	20.94801	119.8226	1	11	1.52	7.236842	21.28982	121.7778
5.72	1	12	0.788	15.22843	20.87795	119.4219	1	12	1.52	7.894737	21.2586	121.5992

$P_{allowable}$ = 119.4" Per Angle

Max Compression Strut See's P = 101.1" < 119.4" ✓ Ok to Use L4x4x3/8" Angle

CALDERWOOD ENGINEERING ETC, LLC
222 RIVER ROAD
RICHMOND, ME 04357
PH. (207) 737-2007 FAX (207) 737-2008
www.calderwoodengineering.com

Check (3) 7/8" Ø Bolts in Shear (for Bolted Connection option) of Strut

$P = 101.1^k$

Table J3.2 → for A325 bolts w/ threads included

$F_v = 21.0^{ksi}$

$A = \pi d^2/4 = \frac{\pi(0.875)^2}{4} = 0.601 \text{ in}^2$

$P = 101.1^k/3 \text{ bolts} = 33.7^k/\text{bolt}$, but Bolts are in double shear $= 16.85^k$

$f_v = 16.85^k/0.601 \text{ in}^2 = 28.0^{ksi} > 21^{ksi}$, but Angle Also welded to top of Strut will Carry Load

W/ 5/16" Fillet Weld Across Length of Leg on Both Sides

$A = (0.707)(5/16)(2)(4 \text{ in}) = 1.77 \text{ in}^2$

F_v for weld $= 0.3 \times E70_{xx} = 21^{ksi}$

Say load Evenly Distributes Between (3) bolts + weld

$A = (3)(0.601 \text{ in}^2)(2) + 1.77 \text{ in}^2 = 5.38 \text{ in}^2$

Double Shear

$f_v = P/A = 101.1^k/5.38 \text{ in}^2 = 18.8^{ksi} < 21^{ksi}$ for both bolts and weld.

∴ Bolts and Weld are OK in Shear. Check Bearing

CALDERWOOD ENGINEERING ETC, LLC
222 RIVER ROAD
RICHMOND, ME 04357
PH. (207) 737-2007 FAX (207) 737-2008
www.calderwoodengineering.com

Check Bolts in Bearing

$F_p = 1.2 F_u$, Bolts Bearing on A36 Steel Angles, Use $F_u = 58^{ksi}$

$F_p = 1.2(58^{ksi}) = 69.6^{ksi}$

$A_{bear} = \phi_{bolt} \times$ Length Bearing Per AISC 9th §3.3

$A_{bear} = (0.875\,in)(3 - \frac{1}{2}(0.875)) = 2.24\,in^2$ per Angle

$f_p = P/A = 101.1^k / 2.24\,in^2 = 45.1^{ksi} < 69.6^{ksi}$ ✓ ok

Check Bearing on Web of Steel, Grade 50 Steel (A572)

$F_u = 65^{ksi}$

$F_p = 1.2(65^{ksi}) = 78^{ksi}$

$A_{bear} = (0.875)(2 - \frac{1}{2}(0.875)) = 1.37\,in^2$

$f_p = P/A = 101.1^k / 1.37\,in^2 = 73.8^{ksi} < 78^{ksi}$ ✓ ok

∴ Ok to Use (3) 7/8" ϕ A325 Bolts Connecting (2) L4x4x3/8" Angles to web of Steel.

CALDERWOOD ENGINEERING ETC, LLC
222 RIVER ROAD
RICHMOND, ME 04357
PH. (207) 737-2007 FAX (207) 737-2008
www.calderwoodengineering.com

Check Weld For Welded Option

Use P = 101.1^k On the Strut.

Using 5/16" Fillet weld Across top flange of the Strut.

L = 14.6 in x 2 sides = 29.2 in

A = (0.707)(5/16)(29.2 in) = 6.45 in^2

F_v = 0.3x Nominal Weld Strength Per Table J2.5
Use E70xx

F_v = (0.3)(70 ksi) = 21 ksi

F_v = P/A = 101.1^k/6.45 in^2 = 15.7 ksi < 21 ksi ✓ ok

Also, Shim between waller + strut to create bearing condition.

BEAMBOY V2.2 REPORT

Sheet Pile

BEAM PROPERTIES

Beam Length = 17 ft.
Moment of Inertia = 256 in^4
Modulus of Elasticity = 29000000 psi
Distance From Neutral Axis to Furthest Fiber = 7.5 in.

LOAD CONFIGURATION

Point Loads

Distributed Loads

Start=1390 lb./ft., x=4.46 ft.; End=406 lb./ft., x=17 ft.

Moments

Supports

Cantilever support; 0 ft., Reaction=7340 lb., 269000 lb.-in.

$M = 269{,}000^{lb\text{-}in} = 269^{k\text{-}in} \approx 268.8^{k\text{-}in}$

Simple support; 13.5 ft., Reaction=7020 lb.

$\therefore$ Use

$M_u = 269^{k\text{-}in}$

MAXIMUM VALUES

Maximum Bending Moment = -22400 lb.-ft. at x=0 ft.

$M_u = 22.4^{k\text{-}ft} = 268.8^{k\text{-}in}$

Maximum Bending Stress = 7900 psi at x=0 ft.
Maximum Deflection = -0.0408 in. at x=7.6 ft.
Maximum Slope = 0.0497 degrees at x=12.9 ft.

1/11/2013

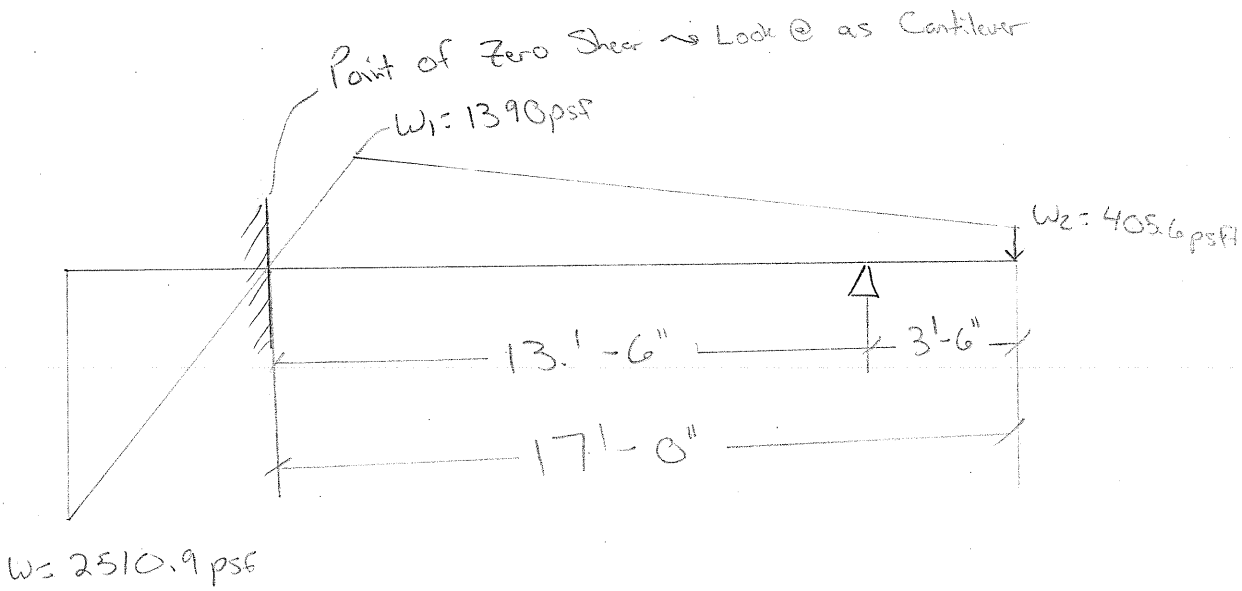

CALDERWOOD ENGINEERING ETC, LLC
222 RIVER ROAD
RICHMOND, ME 04357
PH. (207) 737-2007 FAX (207) 737-2008
www.calderwoodengineering.com

Look @ Req'D Section For Sheets

Look @ Sheets From Point of Zero Shear Upwards to find the Maximum Moment in the Sheet.

$M_u = 269.0^{k\text{-}in}/ft$

Use Grade 50 Steel, Per USS Steel Sheet Piling Design Manual

$F_b = 32{,}000^{psi} = 32.0^{ksi}$

$S = M_u/F_b \rightarrow S_{req'd} = \frac{269.0^{k\text{-}in}}{32^{ksi}} = 8.4^{in^3}$

∴ Use Sheet Pile w/ Section Mod $\geq 8.5^{in^3}$

PZC Section Modulus = 69.8^{in^3} For Sheet, each Steel is 25in wide

For 25in Section the Section Mod $\geq (8.5^{in^3})(25/12) = 17.7^{in^3} < 69.8^{in^3}$

Ok to Use PZC 18 ✓

Try Back Filling Cofferdam to EL. 659.5 After the Footing is Cast and Removing Frame

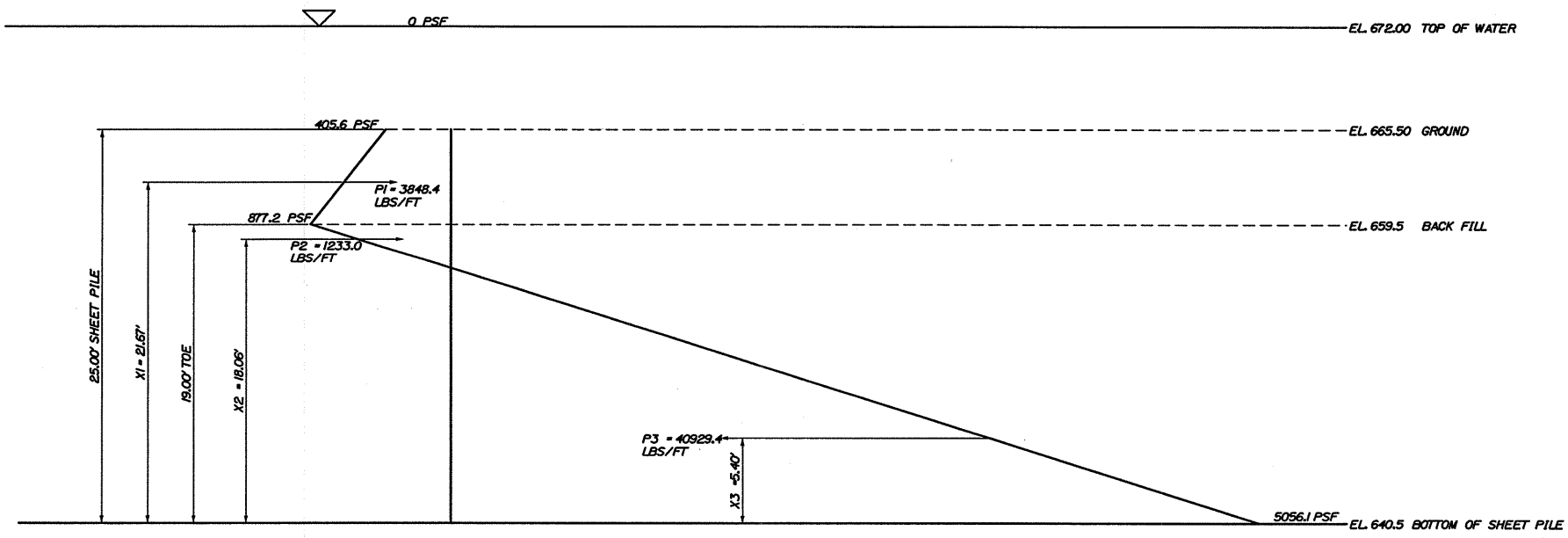

SUM MO = 105.7 K-FT
SUM MR = 221.0 K-FT
F.S. = 2.09 >1.5 ✓

BACK FILL UP TO EL. 659.5
AND REMOVE FRAME

21/23

	(lbs/ft)	(k/ft)	Moment Arm (ft)	Moment (k-ft)
P1	3848.4	3.85	21.67	83.39
P2	1233	1.23	18.06	22.27

Overturning Moment (k-ft)	105.66

	(lbs/ft)	(k/ft)	Moment Arm (ft)	Moment (k-ft)
P3	40929.4	40.93	5.4	221.02

Restoring Moment (k-ft)	221.02

Overturning F.S
2.09

>1.5

F.S. > 1.5

∴ It is ok to Backfill Cofferdam to EL. 659.5' and then Remove Frame.

CALDERWOOD ENGINEERING ETC, LLC
222 RIVER ROAD
RICHMOND, ME 04357
PH. (207) 737-2007 FAX (207) 737-2008
www.calderwoodengineering.com

JOB 091-BR-12 JAMAICA VT
SHEET NO. 1A OF 2A
CALCULATED BY ETC DATE 4/13
CHECKED BY DATE
SCALE

$K_{net} = 5.97 - 0.30 = K_p - K_a = 5.67$ (FROM PREV. COMPS)

$\gamma_{SUB} = 57.6$ PCF (FROM PREV. COMPS)

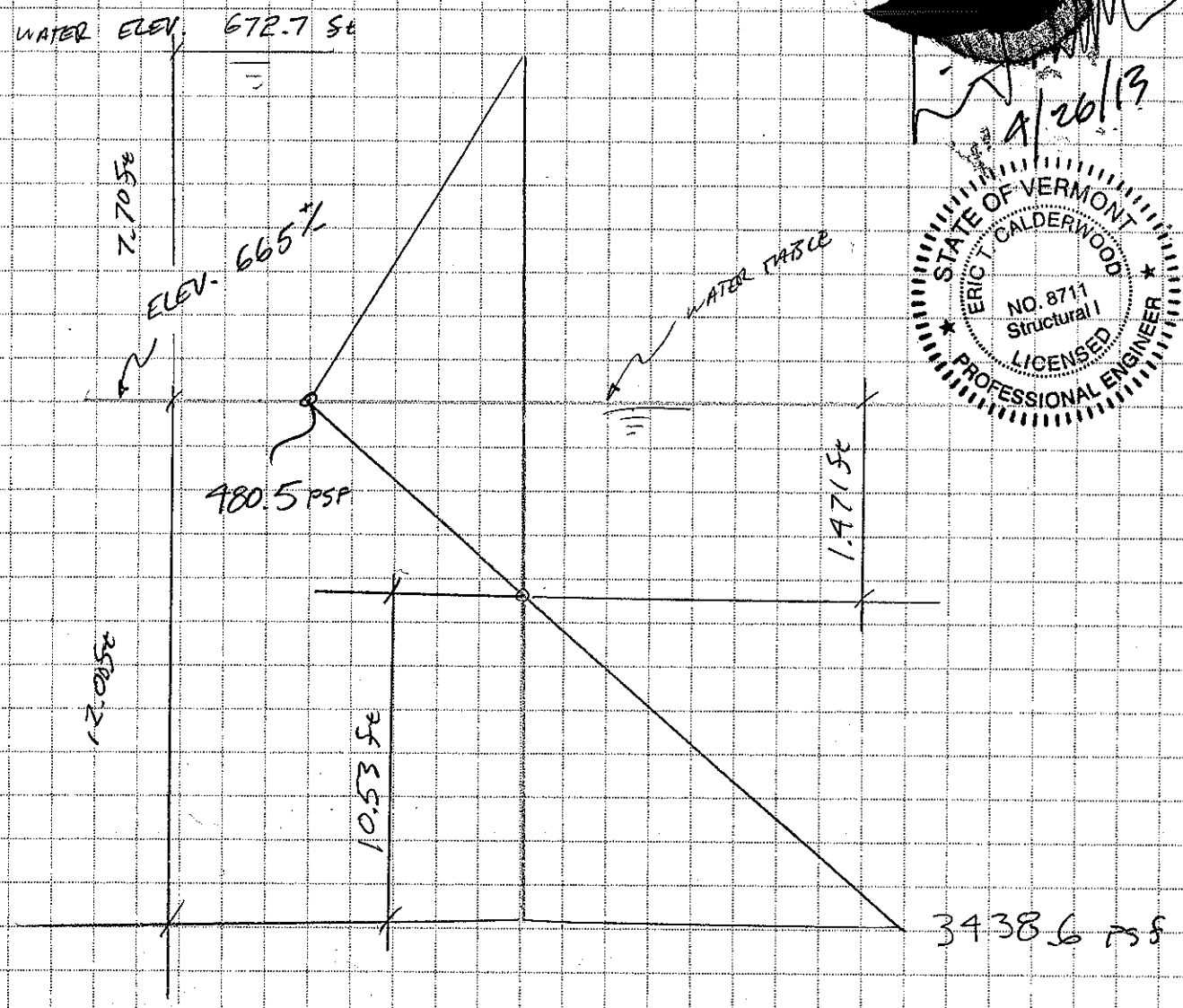

4/26/13

STATE OF VERMONT
ERIC T. CALDERWOOD
NO. 8711
Structural I
LICENSED
PROFESSIONAL ENGINEER

CALDERWOOD ENGINEERING ETC, LLC
222 RIVER ROAD
RICHMOND, ME 04357
PH. (207) 737-2007 FAX (207) 737-2008
www.calderwoodengineering.com

JOB 091-BR-12 JAMAICA VT
SHEET NO. 2A OF 2A
CALCULATED BY ETC DATE 4/13
CHECKED BY DATE
SCALE

$$M_{OT} = 480.5\,psf * \tfrac{1}{2} * 7.70\,ft * (7.70\,ft/3 + 12.0\,ft)$$
$$+ 480.5\,psf * \tfrac{1}{2} * 1.471\,ft * (1.471\,ft * \tfrac{2}{3} + 10.53\,ft)$$

$$= 31{,}015.2\ lb\text{-}ft / ft \quad (\text{ABOUT TOE})$$

$$M_{RESTRAINING} = 3438.6\,psf * \tfrac{1}{2} * 10.53\,ft * (10.53\,ft/3)$$
$$= 63{,}545.8\ lb\text{-}ft/FT \quad (\text{ABOUT TOE})$$

$$F.S. = 63.55 / 31.02 = 2.05 \geq 1.5 \therefore$$

O.K.

12 ft TOE IS SUFFICIEN TO RESIST A 7.70 ft HEAD DIFFERENTIAL IN HYDROSTATIC PRESSURE

STRUCTURAL MOMENT (MAX) IS LOCATED @ THE POINT OF ZERO SHEAR

BY DEFINITION THIS IS HIGHER THAN THE SHEET TOE

$$\therefore M_u < 31{,}015.2\ lb\text{-}ft * \frac{12\ IN/FT}{1000\ LBS/K} = 372.18\ k\text{-}in/FT$$

PZC 13 SHEETS $S = 24.2\ in^3/FT$

PZ 22 SHEETS $S = 18.1\ in^3/FT$

$$f_b \leq \frac{372.56\ k\text{-}in/FT}{18.1\ in^3/FT} = 20.56\ ksi \leq 0.6F_y$$

$\therefore$ O.K.

"NON-STRUCTURAL" COFFER O.K.