S.D. Ireland Companies
Precast Division

193 Industrial Ave. Williston, VT 05495
P.O. Box 2286 South Burlington, VT 05407
p: 802-863-6222 f: 802-860-1528
www.sdireland.com

Attention:	Sam Anderson	Date:	2/13/2015
Company:	Peckham Road Corp.	Job Name:	Bridport STP CULV (29)
Address:	375 Bay Rd. Suite 100	Job Number:	#15428
City, St, Zip:	Queensbury, NY 12804	Regarding:	BR#2 Box Culvert Submittal
Ph: / Fax:	518-792-3157		

WE ARE SENDING: [ ] Quote [x] Details [ ] Other: _____

[x] Submittals [ ] Prints [ ] Plans [ ] Specifications

[ ] Copy Of Letter [ ] Change Order [ ] Samples [ ] Revised Submittals

Copies	Date	Pages	Description
1	2/13/2015	1	Cover Page
1	2/12/2015	8	S.D.Ireland Stamped Drawings
1		1	Precast Mix Design
1		11	Misc component details

These Are Submitted as Checked Below:

[x] For Approval [ ] Approved as Submitted [ ] Resubmit __ Copies for Approval

[ ] For Your Use [ ] Approved as Noted [ ] Submit__ Copies for Distribution

[ ] As Requested [ ] Returned for Corrections [ ] Return __ Corrected Prints

[ ] For Review and Comment [ ] Prints Returned After Loan to Us

[ ] For Bids Due: _____ [ ] Other:

Notes/Remarks:

Sam,

Please pass on for approvals.

Thank you.

Eric Barendse x265

APPROVED: Approval of drawings and/or procedures indicates concurrence with the information presented and does not relieve the Contractor or Fabricator of compliance with all specifications and code requirements	
APPROVED AS NOTED	
REVISE AND RESUBMIT	X
NOT REVIEWED	

Date: 3/09/2015

By: Michael J. Chenette

This review by Stantec Consulting Services Inc. is for the sole purpose of ascertaining conformance with the general design concept. This review shall not mean that Stantec Consulting Services Inc approves the detail design inherent in the shop drawings, responsibility for which shall remain with the Contractor. Submitting same, and such review shall not relieve the Contractor of his responsibility for errors or omissions in the shop drawing or of his responsibility for meeting all requirements of the Contract Documents. The contractor is responsible for dimensions to be confirmed and correlated at the job site, for information that pertains solely to the fabrication processes or to techniques of construction and installation and for coordination of the work of all subtrades.

Copy To: _____

Signed: Eric Barendse

If enclosures are not as noted, kindly notify us at once.

Proposed Bridge Improvement Project

Bridport STP CULV(29)

Bridge #2

Concrete:

Mix Designation: P60TER
1. Specified Mix Design - 5000 PSI
2. Proposed Mix Design - 6000 PSI
3. Striping Strength - 3000 PSI
4. Handling Strength - 3000 PSI
5. Shipping Strength - 5000 PSI
6. Install Strength - 5000 PSI
7. Traffic Loading - 5000 PSI

Fabrication Tolerances:
1. Width ±1/4"
2. Height ±1/4"
3. Length ±1/2"
4. Rebar Cover 2" Min. (Unless Noted Otherwise)
5. Rebar Spacing ±1"
6. Rebar Clearance ±1/4"
7. Insert Placement ±1/4"

Design Notes:
1. Design is in accordance w/ ASTM C1577, PCI MNL135, VAOT540 & AASHTO 2012 LRFD bridge design specs fifth edition
2. Any conflict between tolerances listed above shall result in the usage of the stricter tolerance
3. Design live load = HL-93
4. Materials and manufacturing shall conform to ASTM C1433
5. Earth Cover: ± 15'-0"

Installation:

1. Sub Base for Box Culvert / Cut Off Walls to be Compacted and Level
2. Precast Cut Off Walls + Wing Walls to be installed
3. All Elevations are to be Checked and Verified they Match Those of Plan Set
4. Begin Sequence of Installing All Box Culvert Sections
5. Clean Granular Backfill for structures used for Backfill of Footers & of Box Culvert so water can reach weep holes if applicable
6. Fill all Lifting Holes, Bolt Pockets and Box Culvert grooves and seams w/ non-shrink grout. Applied by Site Contractor.
7. ASTM C1675-11 Box culvert installation guidelines shall be followed.

Reinforcing:

General Notes:
1. Reinforing Steel -
   a. Precast box sections, headwalls, wing walls, & cut off walls shall be level I uncoated bar ASTM A615

2. Materials and manufacturing shall conform to ASTM C1433

Tolerances:
1. Spacing ±1"
2. Clearance ±1/4"

Lap Lengths:
1. Per AASHTO 5.11.2.1.1 & 5.11.5.3.1

Joint Treatment:

Vertical Seams:
Per VTrans approved product list 780.02
Overhead & vertical concrete repair mortar
Applied by site contractor

Horizontal Seams / Grout:
Per VTrans approved product list 707.03
Mortar, type IV
Applied by site contractor

APPROVED: Approval of drawings and/or procedures indicates concurrence with the information presented and does not relieve the Contractor or Fabricator of compliance with all specifications and code requirements		Stantec
APPROVED AS NOTED		
REVISE AND RESUBMIT	X	
NOT REVIEWED		
Date: 3/09/2015		
By: Michael J. Chenette		

This review by Stantec Consulting Services Inc. is for the sole purpose of ascertaining conformance with the general design concept. This review shall not mean that Stantec Consulting Services Inc approves the detail design inherent in the shop drawings, responsibility for which shall remain with the Contractor. Submitting same, and such review shall not relieve the Contractor of his responsibility for errors or omissions in the shop drawing or of his responsibility for meeting all requirements of the Contract Documents. The contractor is responsible for dimensions to be confirmed and correlated at the job site, for information that pertains solely to the fabrication processes or to techniques of construction and installation and for coordination of the work of all subtrades.

Waterproofing:

1. Silane sealer applied in precast yard on all exposed surfaces (headwalls and top of wingwalls.)

Miscellaneous:

1. All bolt pocket hardware & wingwall hardware to be uncoated, black steel & shall remain in place.
2. All exposed edges of concrete shall be chamfered.
3. Concrete leveling pad for the cutoff walls is to be poured on site by the site contractor.

Legend:

(A) 3"Ø PVC Sleeve

(B) 4"Ø PVC Sleeve

(C) Mechanical Bolt Pocket (A.L. Patterson w/ 1"Ø Coil Rod)

(D) Oxford A750-7 Lifting Device

(E) 1"Ø x 12" CX-9 Coil Loop Insert

(F) 1 1/2" x 3 1/2" Continuous Keyway

(G) Solid Lines Indicate ¾" Chamfer

(H) ⅜" FI 64 Ferrule Insert

2/12/15

STATE OF VERMONT
GARY K. MUNKELT
NO. 6291
REGISTERED
PROFESSIONAL ENGINEER

STRUCTURAL DESIGN ONLY

Gary K. Munkelt & Associates
Structural Consulting Engineers
1100 Welsh Rd, Suite 190
North Wales, PA 19454
Ph:215-855-8710 F:215-855-8716

CONTRACTORS VISPE:

PRECAST CONCRETE BOX CULVERT SHOP DRAWINGS (SDI JOB #15428)

SUPERVISOR: E. Barendse
DETAILER: I. ADAMS
CHECKER: E. Barendse
ENGINEER: G. K. Munkelt

PROJECT NAME: Bridport
PROJECT #: CULV(29) Br.#2
LOCATION: Bridport, VT

Peckham Road Corp.
1557 St. Rt. 9, #3
Lake George, NY 12845
Ph: (518) 747-3353

FABRICATOR:
193 INDUSTRIAL AVE.
WILLISTON, VT 05495
Ph: (802) 658-0201

SD Ireland PRECAST

02/12/15 | COVER_PAGE | 1_OF_8

Table of Units				
Name	Qty	Length	Vol.(CY)	Wt.(lbs.)*
BC-1A*	1	6'-6¾"	12.17	50,000
BC-1B	1	6'-6¾"	9.11	37,500
BC-2A	8	6'-6¾"	9.11	37,500
BC-2B	8	6'-6¾"	9.11	37,500
BC-3A*	1	6'-6¾"	12.17	50,000
BC-3B	1	6'-6¾"	9.11	37,500
WW-1	1	11'-0"	10.94	45,000
WW-2	1	12'-0"	11.81	48,500
WW-3A	1	7'-6"	10.35	42,500
WW-3B	1	7'-0"	9.78	40,100
WW-4A	1	8'-0"	10.80	44,250
WW-4B	1	8'-0"	10.38	42,600
CW-1	1	22'-0"	2.24	9,000
CW-2	1	22'-0"	2.24	9,000

* Headwall Included in BC-1A and BC-3A

Plan View

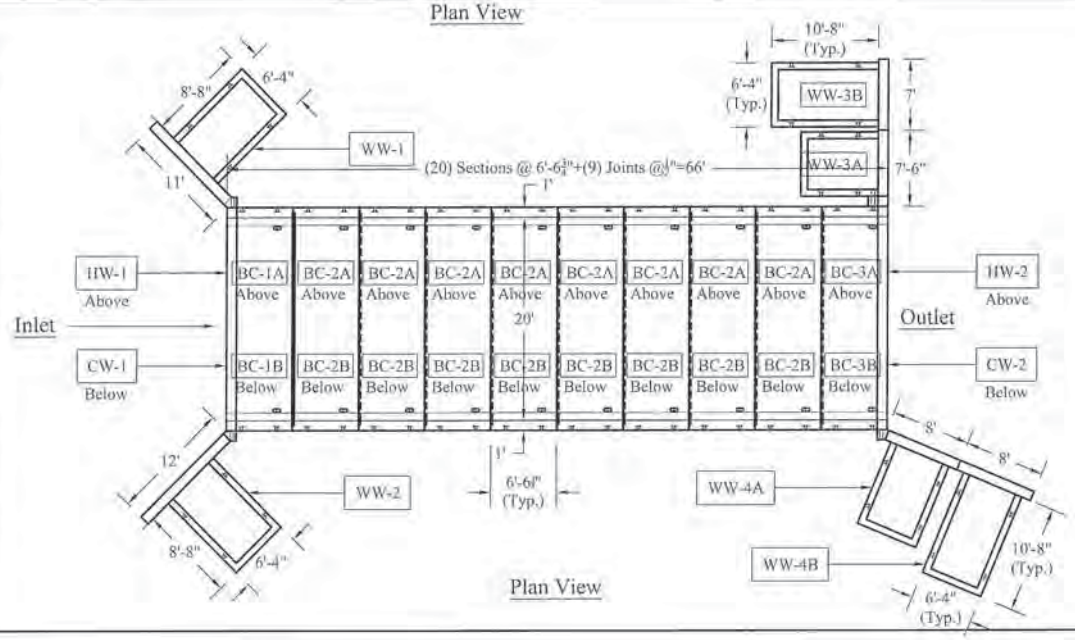

Plan View

Culvert Specifications	
Inside Dimensions	10'-0"x20'-0"
Waterway Area	160 Sq. Ft.
Top Slab Thickness	15"
Side Wall Thickness	12"
Bottom Slab Thickness	15"

APPROVED: Approval of drawings and or procedures indicates concurrence with the information presented and does not relieve the Contractor or Fabricator of compliance with all specifications and code requirements

APPROVED AS NOTED

REVISE AND RESUBMIT X

NOT REVIEWED

Date: 3/09/2015

by: Michael J. Chenette

This review by Stantec Consulting Services Inc. is for the sole purpose of ascertaining conformance with the general design concept. This review shall not mean that Stantec Consulting Services Inc. approves the detail design inherent in the shop drawings, responsibility for which shall remain with the Contractor. Submitting same, and such review shall not relieve the Contractor of his responsibility for errors or omissions in the shop drawings or of his responsibility for meeting all requirements of the Contract Documents. The contractor is responsible for dimensions to be confirmed and correlated at the job site, for information that pertains solely to the fabrication processes or to techniques of construction and installation, and for coordination of the work of all trades.

Stantec

Provide elevations for WW1 and WW3

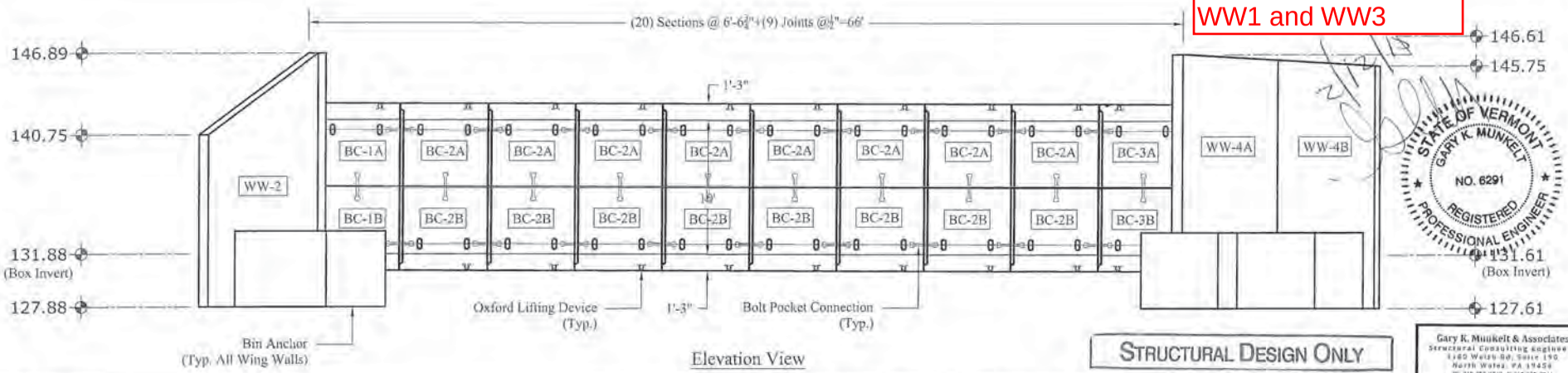

Elevation View

STATE OF VERMONT
GARY K. MUNKELT
NO. 6291
REGISTERED PROFESSIONAL ENGINEER

STRUCTURAL DESIGN ONLY

Gary K. Munkelt & Associates
Structural Consulting Engineers
1180 Welsh Rd, Suite 150
North Wales, PA 19454
Ph 215-855-9713, F 215-855-9714

CONTRACTORS VISPE:

PRECAST CONCRETE BOX CULVERT SHOP DRAWINGS (SDI JOB #15428)

SUPERVISOR: E. Barendse
DETAILER: I. ADAMS
CHECKER: E. Barendse
ENGINEER: G. K. Munkelt

PROJECT NAME: Bridport
PROJECT #: CULV(29) Br.#2
LOCATION: Bridport, VT

Peckham Road Corp.
1557 St. Rt. 9, #3
Lake George, NY 12845
Ph: (518) 747-3353

FABRICATOR:
193 INDUSTRIAL AVE.
WILLISTON, VT 05495
Ph: (802) 658-0201

SD Ireland PRECAST

02/12/15 | PLAN_ELEVATION | 2_OF_8

BC-1A Detail

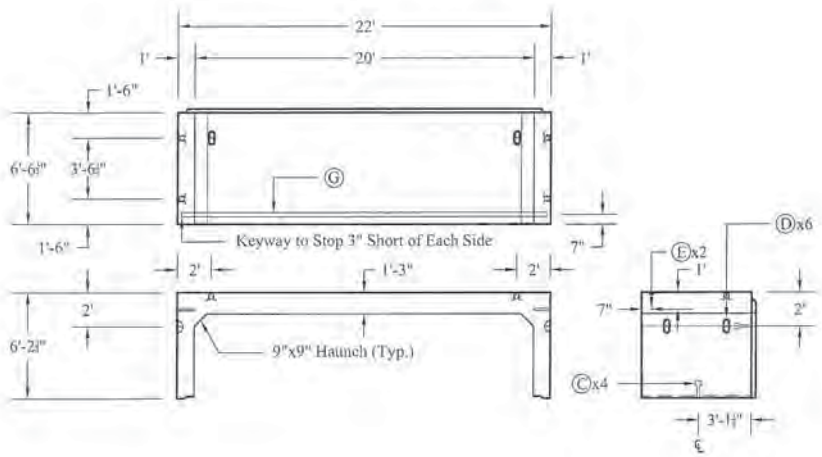

BC-2A Detail

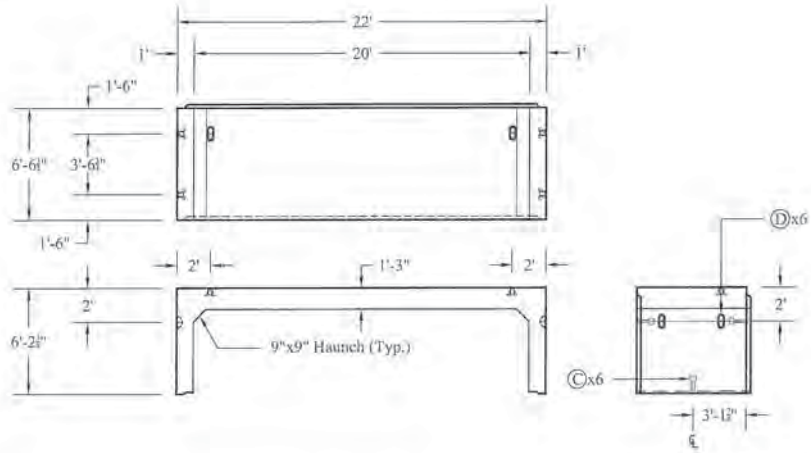

STRUCTURAL DESIGN ONLY

BC-3A Detail

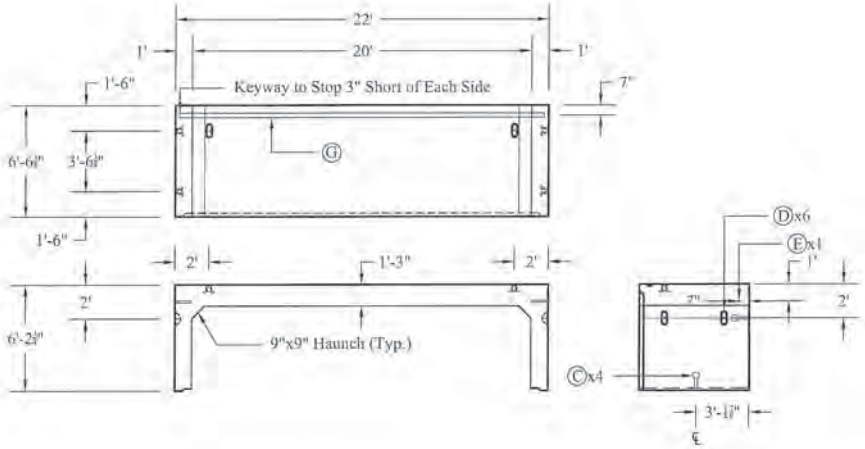

APPROVED: Approval of drawings and/or procedures indicates concurrence with the information presented and does not relieve the Contractor or Fabricator of compliance with all specifications and code requirements.		Stantec
APPROVED AS NOTED		
REVISE AND RESUBMIT	X	
NOT REVIEWED		
Date: 3/09/2015		
By: Michael J. Chenette		
This review by Stantec Consulting Services Inc. is for the sole purpose of ascertaining conformance with the general design concept. This review shall not mean that Stantec Consulting Services Inc approves the detail design inherent in the shop drawings, responsibility for which shall remain with the Contractor. Submitting same, and such review shall not relieve the Contractor of his responsibility for errors or omissions in the shop drawing or of his responsibility for meeting all requirements of the Contract Documents. The contractor is responsible for dimensions to be confirmed and correlated at the job site, for information that pertains solely to the fabrication processes or to techniques of construction and installation and for coordination of the work of all subcontractors.		

Box Secion Reinforcement Detail

Rebar Schedule

Mark	Size	Max Spacing	Length	Type	A	B	
As1	#4	8"	94½"	Bent	24"	70¼"	
As2	#7	4"	262"	Str	262"		
As4	#4	8"	70¼"	Str	70¼"		
As5	#5	8"	74½"	Str	74½"		
As6	#5	8"	74½"	Str	74½"		
As7	#4	8"	262"	Str	262"		
As8	#4	12"	74½"	Str	74½"		

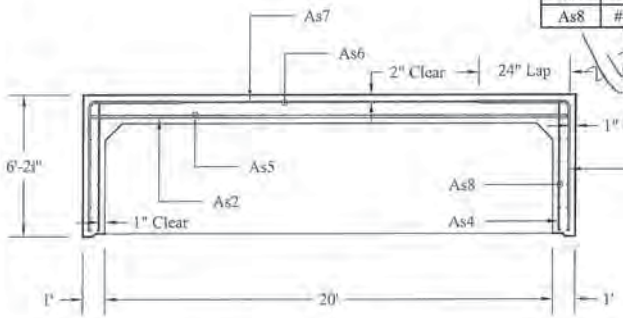

STATE OF VERMONT
GARY K. MUNKELT
NO. 6291
REGISTERED
PROFESSIONAL ENGINEER

Gary K. Munkelt & Associates
Structural Consulting Engineers
1180 Welsh Rd, Suite 190
North Wales, PA 19454
Ph 215-855-9713 F 215-855-9714

CONTRACTORS VISPE:

Ⓐ 3"Ø PVC Sleeve
Ⓑ 4"Ø PVC Sleeve
Ⓒ Mechanical Bolt Pocket (A.L. Patterson w/ 1"Ø Coil Rod)
Ⓓ Oxford A250/7 Lifting Device
Ⓔ 1"Ø x 12" LX19 Coil Loop Insert
Ⓕ 1 1/2" x 3 1/2" Continuous Keyway
Ⓖ Solid Lines Indicate ½" Chamfer
Ⓗ 8" T1.6-1 Tongue Insert

PRECAST CONCRETE BOX CULVERT SHOP DRAWINGS (SDI JOB #15428)		Peckham Road Corp. 1557 St. Rt. 9, #3 Lake George, NY 12845 Ph: (518) 747-3353	FABRICATOR: 193 INDUSTRIAL AVE. WILLISTON, VT 05495 Ph: (802) 658-0201
SUPERVISOR: E. Barendse	PROJECT NAME: Bridport		
DETAILER: I. ADAMS	PROJECT #: CULV(29) Br.#2		
CHECKER: E. Barendse	LOCATION: Bridport, VT		
ENGINEER: G. K. Munkelt		02/12/15	BOX_SECTIONS_1 — 3_OF_8

SD Ireland PRECAST

BC-1B Detail

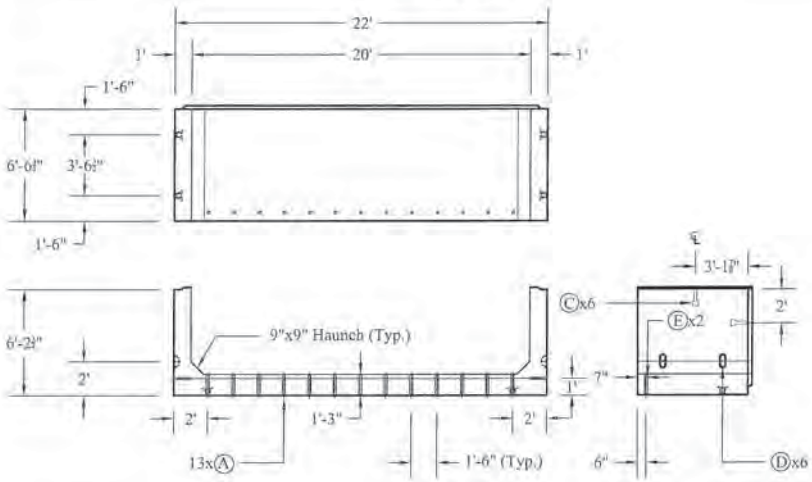

BC-2B Detail

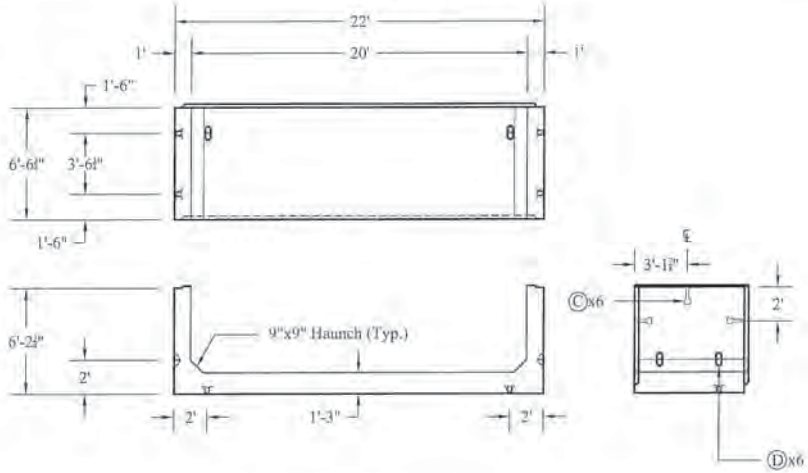

BC-3B Detail

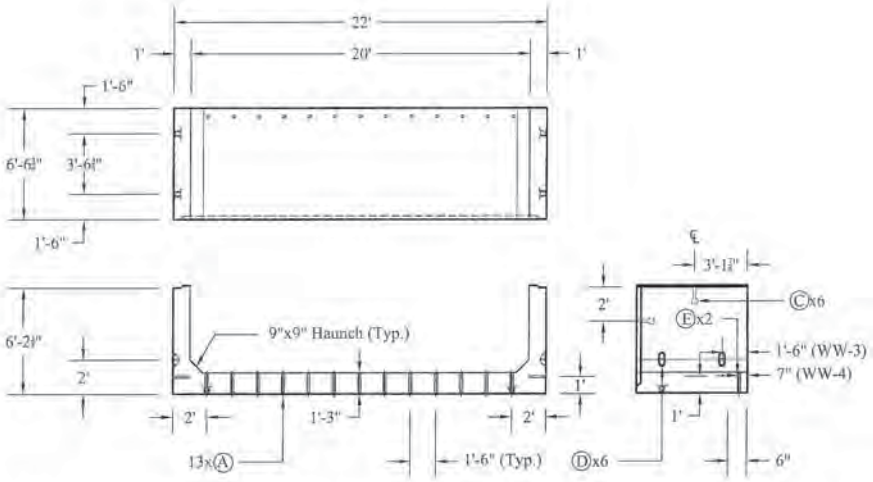

APPROVED: Approval of drawings and/or procedures indicates concurrence with the information presented and does not relieve the Contractor or Fabricator of compliance with all specifications and code requirements		Stantec
APPROVED AS NOTED		
REVISE AND RESUBMIT	X	
NOT REVIEWED		
Date: 3/09/2015		
By: Michael J. Chenette		
This review by Stantec Consulting Services Inc. is for the sole purpose of ascertaining conformance with the general design concept. This review shall not mean that Stantec Consulting Services Inc approves the detail design inherent in the shop drawings, responsibility for which shall remain with the Contractor. Submitting same, and such review shall not relieve the Contractor of his responsibility for errors or omissions in the shop drawing or of his responsibility for meeting all requirements of the Contract Documents. The contractor is responsible for dimensions to be confirmed and correlated at the jobsite, for information that pertains solely to the fabrication processes or to techniques of construction and installation and for coordination of the work of all subtrades.		

Box Secion Reinforcement Detail

Rebar Schedule

Mark	Size	Max Spacing	Length	Type	A	B	
As1	#4	8"	94¼"	Bent	24"	70¼"	
As3	#7	6"	262"	Str	262"		
As4	#4	8"	70¼"	Str	70¼"		
As6	#5	8"	74¼"	Str	74¼"		
As7	#4	8"	262"	Str	262"		
As8	#4	12"	74¼"	Str	74¼"		

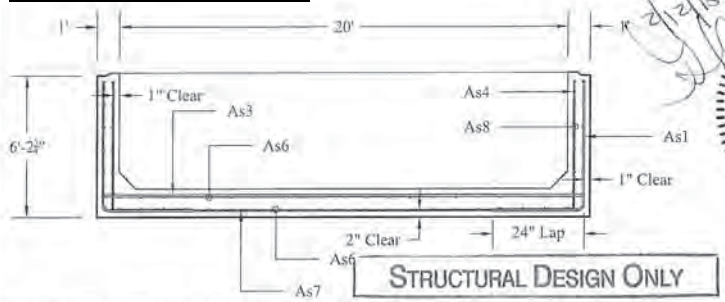

STATE OF VERMONT
GARY K. MUNKELT
NO. 6291
REGISTERED PROFESSIONAL ENGINEER

2/12/15

STRUCTURAL DESIGN ONLY

Gary K. Munkelt & Associates
Structural Consulting Engineers
1100 Walsh Rd. Suite 190
North Wales, PA 19454
Ph 215-855-8718 F 215-855-8714

CONTRACTORS VISPE

Ⓐ 1"Ø PVC Sleeve
Ⓑ 4"Ø PVC Sleeve
Ⓒ Mechanical Bolt Pocket (A.L. Patterson w/ 1"Ø Coil Rod)
Ⓓ Oxford A750-7 Lifting Device
Ⓔ 1"Ø x 12" CX-8 Coil Loop Insert
Ⓕ 1 1/2" x 3 1/2" Continuous Keyway
Ⓖ Solid Cross Inflexible 3/4" Chamfer
Ⓗ 2" FI-84 Ferrule Insert

PRECAST CONCRETE BOX CULVERT SHOP DRAWINGS (SDI JOB #15428)		Peckham Road Corp. 1557 St. Rt. 9, #3 Lake George, NY 12845 Ph: (518) 747-3353	FABRICATOR: 193 INDUSTRIAL AVE. WILLISTON, VT 05495 Ph: (802) 658-0201	SD Ireland PRECAST
SUPERVISOR: E. Barendse	PROJECT NAME: Bridport			
DETAILER: I. ADAMS	PROJECT #: CULV(29) Br.#2			
CHECKER: E. Barendse	LOCATION: Bridport, VT			
ENGINEER: G. K. Munkelt		02/12/15	BOX_SECTIONS_2	4_OF_8

WW-1 Detail

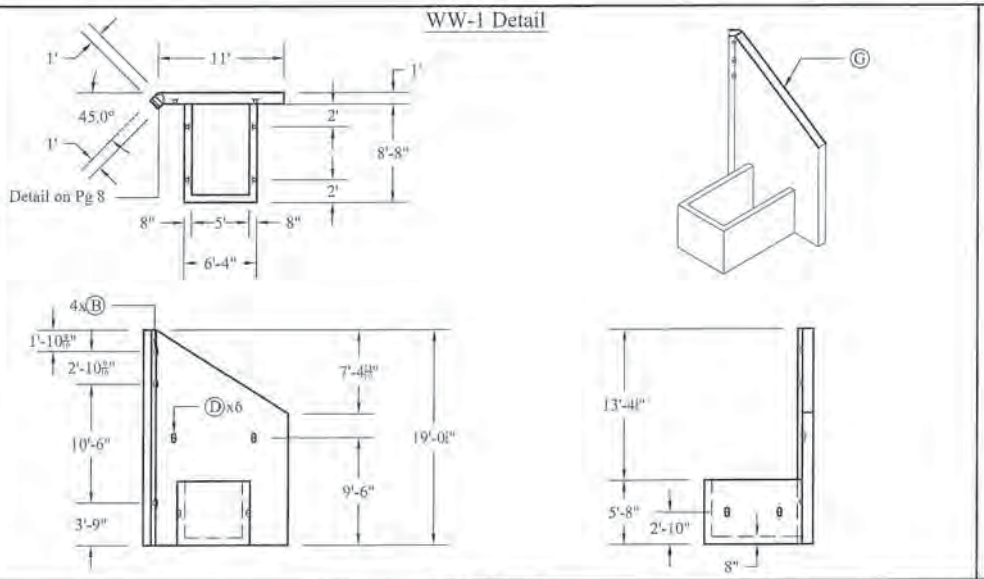

WW-3A Detail

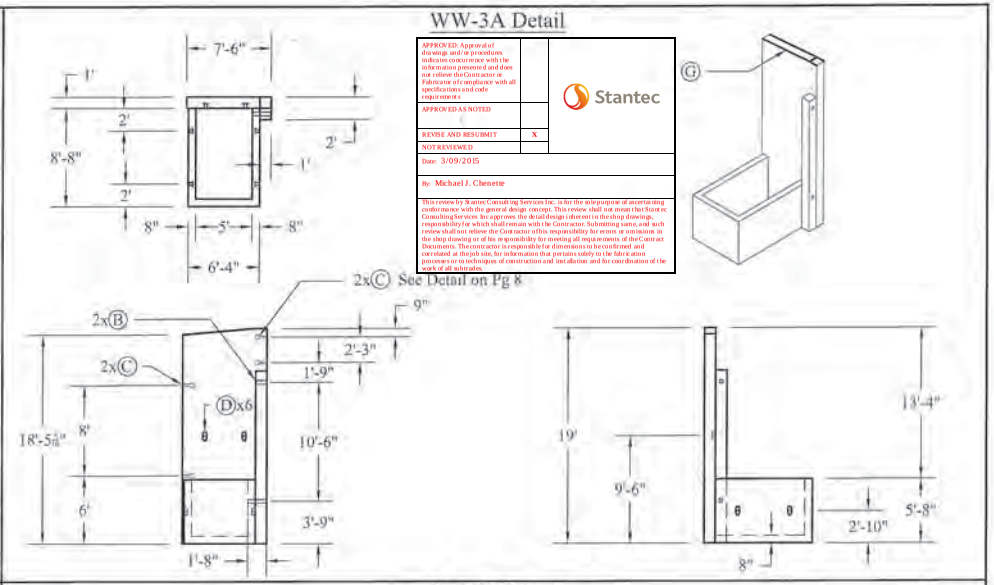

APPROVED: Approval of drawings and/or procedures indicates conformance with the information presented and does not relieve the Contractor or Fabricator of compliance with all specifications and code requirements.

APPROVED AS NOTED

REVISE AND RESUBMIT X

NOT REVIEWED

Date: 3/09/2015

By: Michael J. Chenette

Stantec

This review by Stantec Consulting Services Inc. is for the sole purpose of ascertaining conformance with the general design concept. This review shall not mean that Stantec Consulting Services Inc. agrees to the detail design inherent in the shop drawings, responsibility for which shall remain with the Contractor. Submitting same, and such review shall not relieve the Contractor of his responsibility for errors or omissions in the shop drawing or of his responsibility for meeting all requirements of the Contract Documents. The contractor is responsible for dimensions to be confirmed and correlated at the job site, for information that pertains solely to the fabrication processes or to techniques of construction and installation and for coordination of the work of all subcrafts.

WW-2 Detail

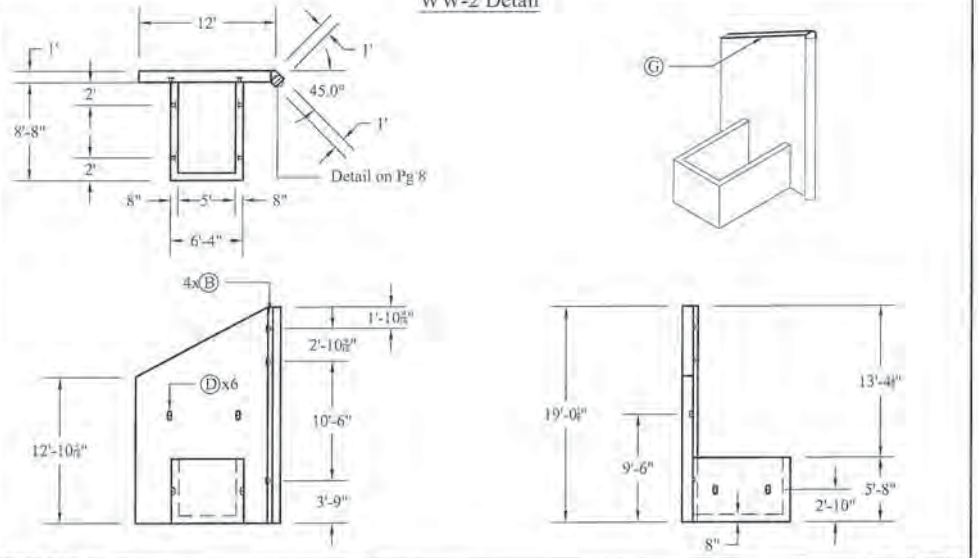

WW-3B Detail

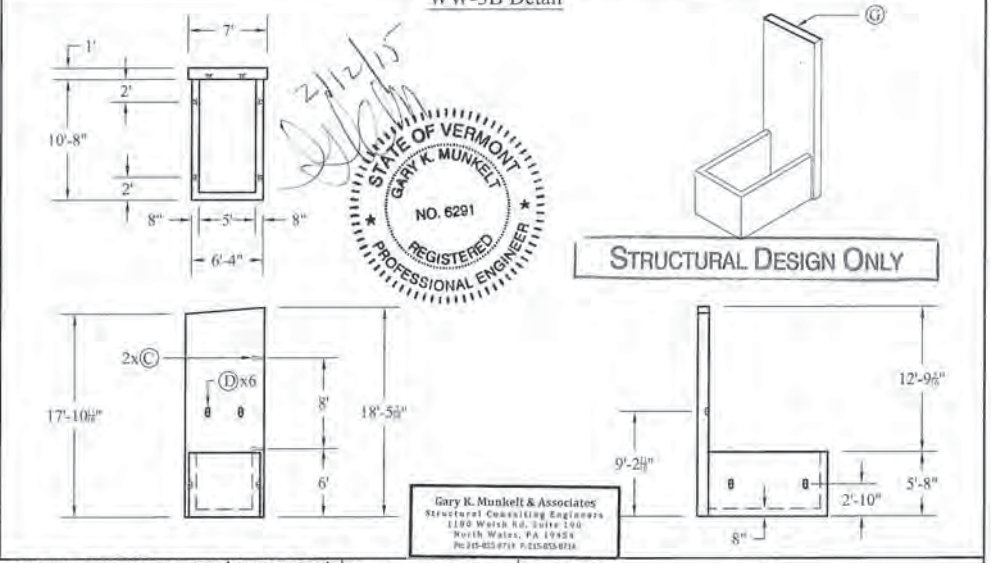

2/12/15

STATE OF VERMONT
GARY K. MUNKELT
NO. 6291
REGISTERED
PROFESSIONAL ENGINEER

STRUCTURAL DESIGN ONLY

Gary K. Munkelt & Associates
Structural Consulting Engineers
1180 Welsh Rd., Suite 100
North Wales, PA 19454
Ph: 215-853-6719 F: 215-853-6714

CONTRACTORS VISPE:

- (A) 3"Ø PVC Sleeve
- (B) 4"Ø PVC Sleeve
- (C) Mechanical Bolt Pocket (A.L. Patterson w/ 1"Ø Coil Rod)
- (D) Oxford A750-7 Lifting Device
- (E) 1"Ø x 12" CX-8 Coil Loop Insert
- (F) 1 1/2" x 1 1/2" Continuous Keyway
- (G) Solid Lines Indicate 3/4" Chamfer
- (H) 3/4" Ø FI 64 Formit Insert

PRECAST CONCRETE BOX CULVERT SHOP DRAWINGS (SDI JOB #15428)	
SUPERVISOR: E. Barendse	PROJECT NAME: Bridport
DETAILER: I. ADAMS	PROJECT #: CULV(29) Br.#2
CHECKER: E. Barendse	LOCATION: Bridport, VT
ENGINEER: G. K. Munkelt	

Peckham Road Corp.
1557 St. Rt. 9, #3
Lake George, NY 12845
Ph: (518) 747-3353

FABRICATOR:
193 INDUSTRIAL AVE.
WILLISTON, VT 05495
Ph: (802) 658-0201

SD Ireland PRECAST

02/12/15 | WING_WALLS_1 | 5_OF_8

This angle appears wrong, should be 67.5

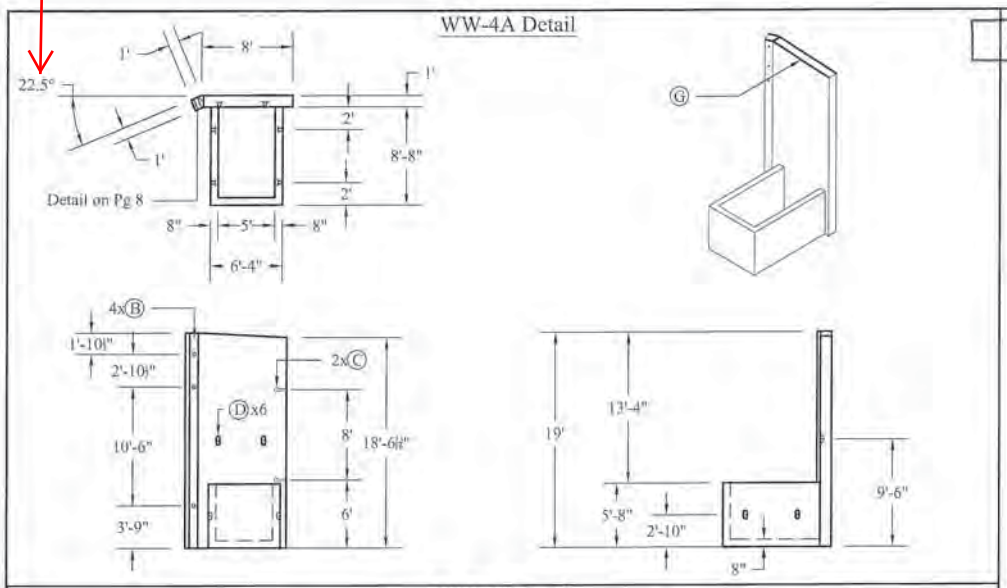

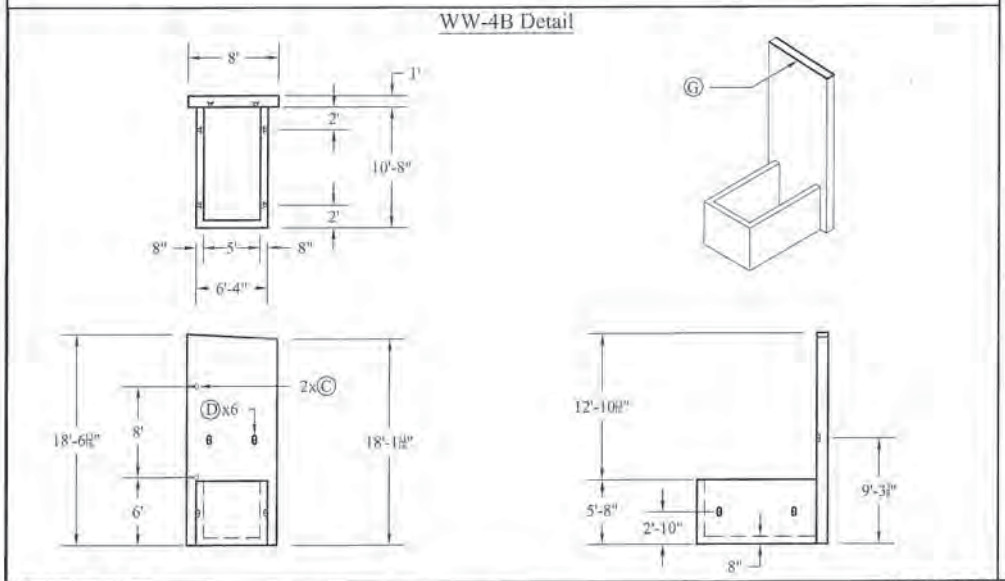

STRUCTURAL DESIGN ONLY

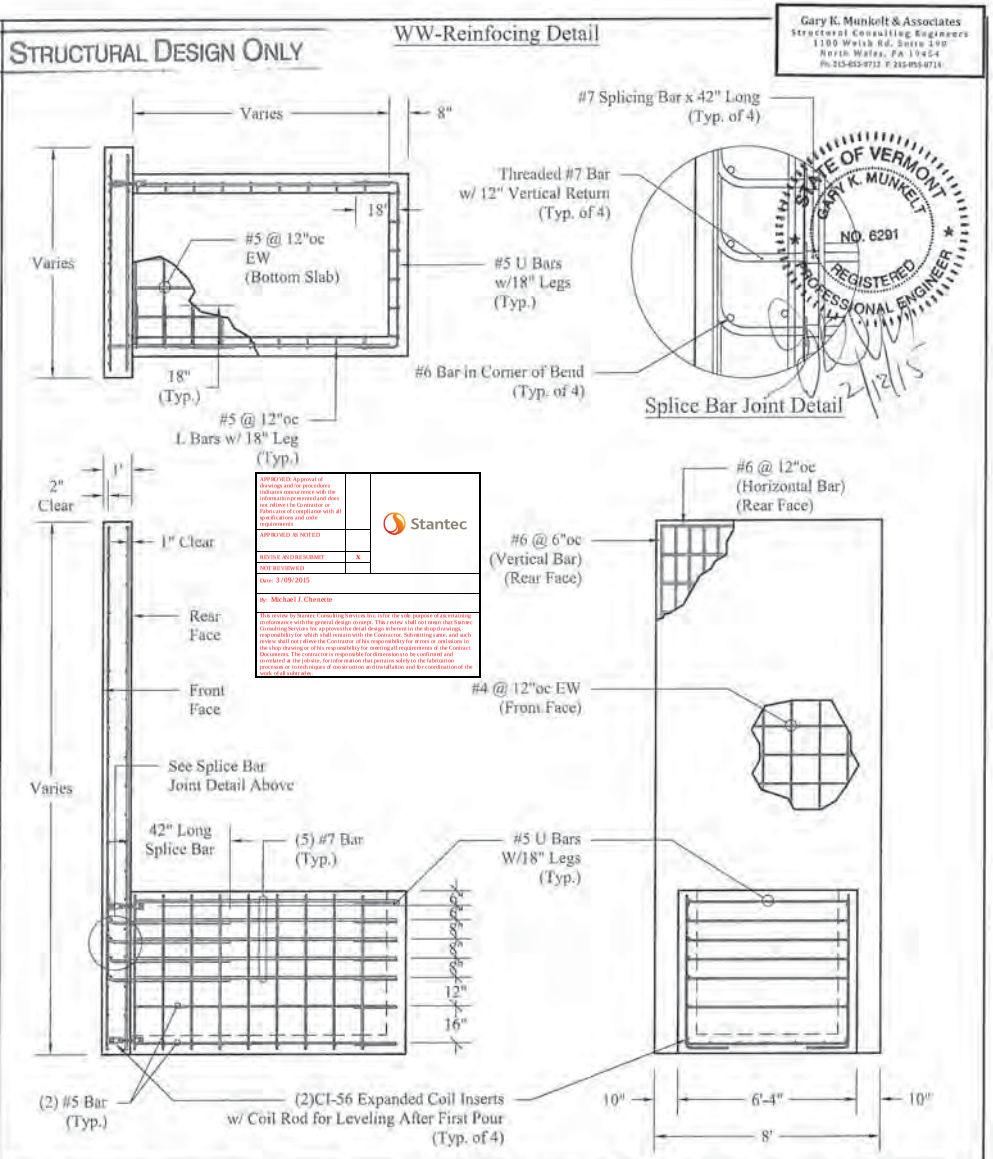

Stantec

APPROVED: Approval of drawings and/or procedures indicates concurrence with the information presented and does not relieve the Contractor or fabricator of compliance with all specifications and code requirements.

APPROVED AS NOTED

REVISE AND RESUBMIT X

NOT REVIEWED

Date: 3/09/2015

By: Michael J. Chenette

This review by Stantec Consulting Services Inc. is for the sole purpose of ascertaining conformance with the general design concept. This review shall not mean that Stantec Consulting Services Inc approves the detail design inherent in the shop drawings, responsibility for which shall remain with the Contractor. Submitting same, and such review shall not relieve the Contractor of his responsibility for errors or omissions in the shop drawings or his responsibility for meeting all requirements of the Contract Documents. This review is not to be construed as approving a deviation from the Contract Documents a the process, for information that pertains solely to the fabrication processes or to methods of construction and installation and for coordination of the work of all subcontrac.

Gary K. Munkelt & Associates
Structural Consulting Engineers
1100 Welsh Rd. Suite 100
North Wales, PA 19454
Ph: 215-653-8712 F: 215-953-8714

STATE OF VERMONT
GARY K. MUNKELT
NO. 6291
REGISTERED PROFESSIONAL ENGINEER
2/12/15

CONTRACTORS VISPE:

Ⓐ 3"Ø PVC Sleeve
Ⓑ 4"Ø PVC Sleeve
Ⓒ Mechanical Bolt Pocket (A.L. Patterson w/ 1"Ø Coil Rod)
Ⓓ Dayton A750-3 Lifting Device
Ⓔ 1"Ø x 12" CX-9 Coil Loop Insert
Ⓕ 1 1/2" x 1 1/2" Continuous Keyway
Ⓖ Solid Lexan Indicator 3/4" Chamfer
Ⓗ 3" Ø 1-64 Formed Inserts

PRECAST CONCRETE BOX CULVERT SHOP DRAWINGS (SDI JOB #15428)

SUPERVISOR: E. Barendse
DETAILER: I. ADAMS
CHECKER: E. Barendse
ENGINEER: G. K. Munkelt

PROJECT NAME: Bridport
PROJECT #: CULV(29) Br.#2
LOCATION: Bridport, VT

Peckham Road Corp.
1557 St. Rt. 9, #3
Lake George, NY 12845
Ph: (518) 747-3353

FABRICATOR:
193 INDUSTRIAL AVE.
WILLISTON, VT 05495
Ph: (802) 658-0201

SD Ireland PRECAST

02/12/15 | WING_WALLS_2 | 6_OF_8

Headwall 1 Detail

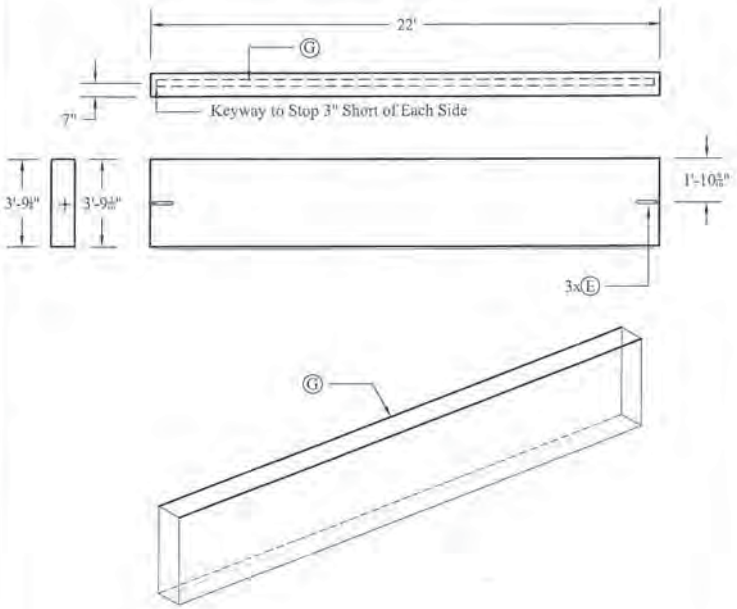

Headwall 2 Detail

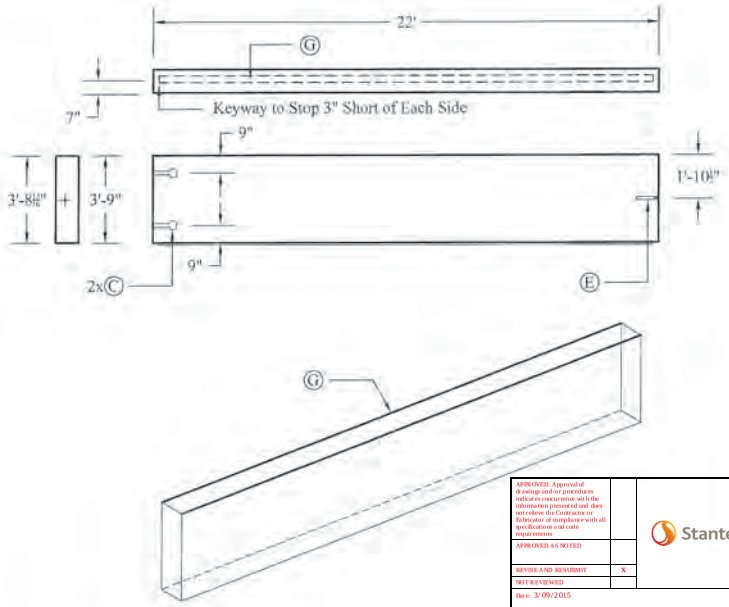

Headwall Reinforcing

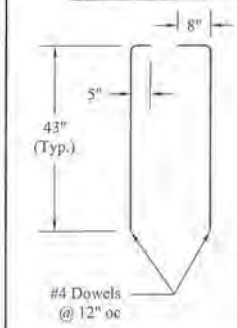

Cutoff Wall Reinforcing

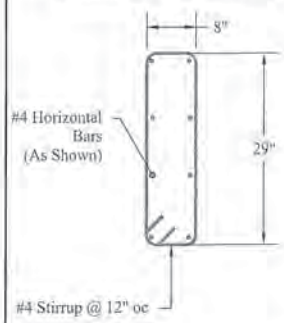

APPROVED: Approval of drawings and/or procedures indicates concurrence with the information presented and does not relieve the Contractor or Subcontractor of compliance with all specifications and code requirements		Stantec
APPROVED AS NOTED		
REVISE AND RESUBMIT	X	
NOT REVIEWED		
Date: 3/09/2015		
By: Michael J. Chenette		

This review by Stantec Consulting Services Inc. is for the sole purpose of ascertaining conformance with the general design concept. This review shall not mean that Stantec Consulting Services Inc. approves the detail design inherent in the shop drawings, responsibility for which shall remain with the Contractor. Submitting same, and such review shall not relieve the Contractor of his responsibility for errors or omissions in the shop drawings or his responsibility for meeting all requirements of the Contract Documents. The contractor is responsible for dimensions to be confirmed and correlated at the job site, for information that pertains solely to the fabrication processes or to techniques of construction and installation and for coordination of the work of all subtrades.

CW-1/2 Detail

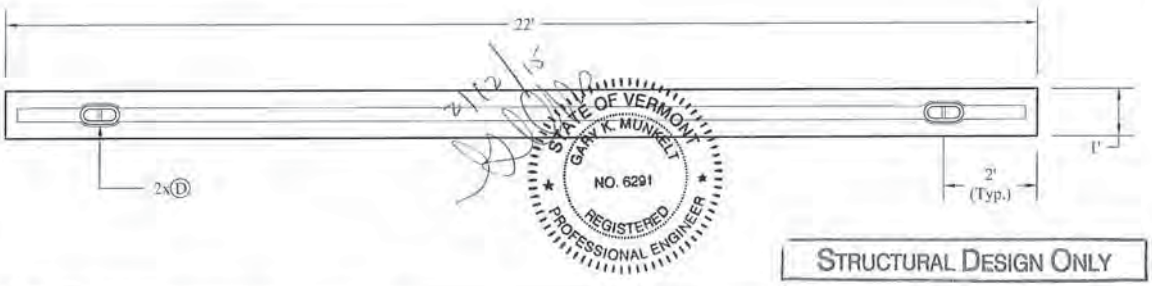

STRUCTURAL DESIGN ONLY

CW-1 Detail

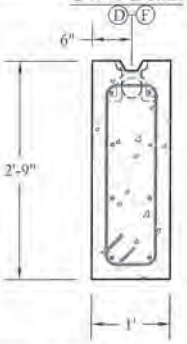

CW-2 Detail

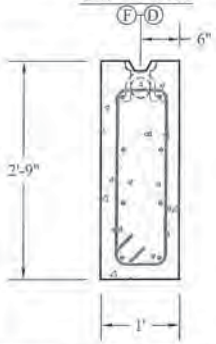

CONTRACTORS VTSPEC:

- A 3"Ø PVC Sleeve
- B 4"Ø PVC Sleeve
- C Mechanical Bolt Pocket (A.L. Patterson w/ 1"Ø Coil Rod)
- D Oxford A750-7 Lifting Device
- E 1"Ø x 12" EX-9 Coil Loop Inserts
- F 1 1/2" x 3 1/2" Commander Keyway
- G Solid Lines Indicate 3/4" Chamfer
- H 3/4" H-64 Female Insert

Gary K. Munkelt & Associates
Structural Consulting Engineers
1180 Welsh Rd. Suite 190
North Wales, PA 19454
Ph 215-855-8713 F 215-855-8714

PRECAST CONCRETE BOX CULVERT SHOP DRAWINGS (SDI JOB #15428)	
SUPERVISOR: E. Barendse	PROJECT NAME: Bridport
DETAILER: I. ADAMS	PROJECT #: CULV(29) Br.#2
CHECKER: E. Barendse	LOCATION: Bridport, VT
ENGINEER: G. K. Munkelt	

Peckham Road Corp.
1557 St. Rt. 9, #3
Lake George, NY 12845
Ph: (518) 747-3353

FABRICATOR:
193 INDUSTRIAL AVE.
WILLISTON, VT 05495
Ph: (802) 658-0201

SD Ireland PRECAST

02/12/15 | HW_CW_DETAILS | 7_OF_8

CW to BC Connection Detail

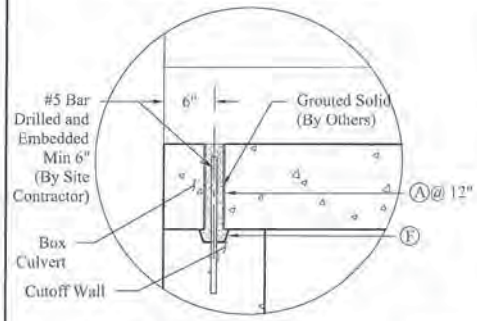

WW to BC Connection Detail

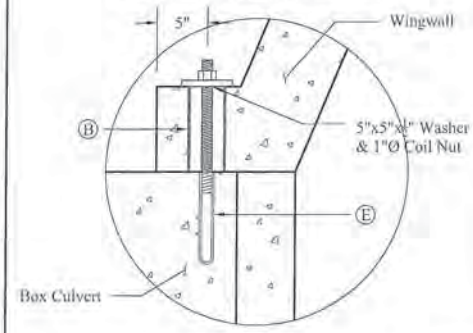

WW Sleeve Blockout Elevation Detail

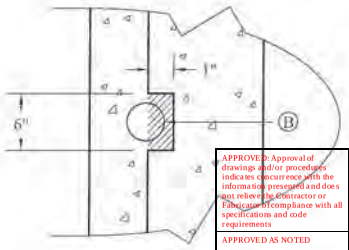

WW Sleeve Reinfrocement Detail

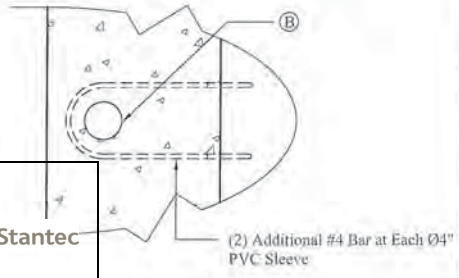

APPROVED: Approval of drawings and/or procedures indicates concurrence with the information presented and does not relieve the Contractor or Fabricator of compliance with all specifications and code requirements

APPROVED AS NOTED

REVISE AND RESUBMIT X

NOT REVIEWED

Date: 3/09/2015

By: Michael J. Chenette

This review by Stantec Consulting Services Inc. is for the sole purpose of ascertaining conformance with the general design concept. This review shall not mean that Stantec Consulting Services Inc approves the detail design inherent in the shop drawings, responsibility for which shall remain with the Contractor. Submitting same, and such review shall not relieve the Contractor of his responsibility for errors or omissions in the shop drawing or of his responsibility for meeting all requirements of the Contract Documents. The contractor is responsible for dimensions to be confirmed and correlated at the job site, for information that pertains solely to the fabrication processes or to techniques of construction and installation and for coordination of the work of all subtrades.

Bolt Pocket Connection Detail

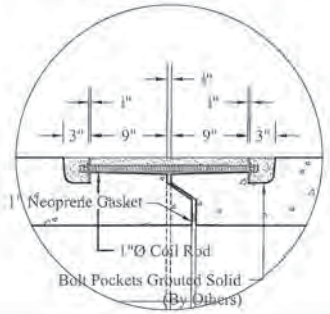

HW to BC Connection Detail

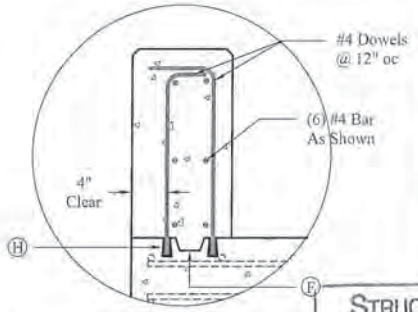

WW Sleeve Blockout Plan Detail

WW Angle Reinforcing Detail

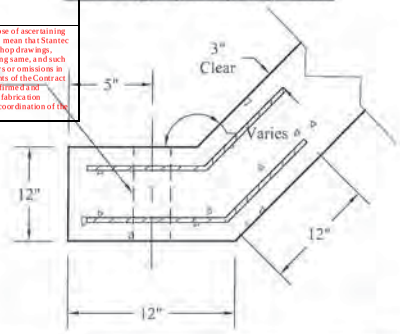

STRUCTURAL DESIGN ONLY

Keyway Connection Detail

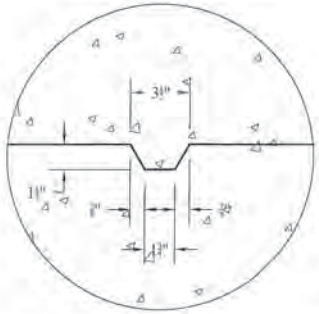

BC Horizontal Shear Key Detail

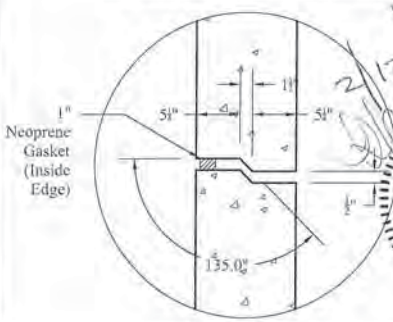

2/12/15

STATE OF VERMONT
GARY K. MUNKELT
NO. 6291
REGISTERED PROFESSIONAL ENGINEER

BC Vertical Shear Key Detail

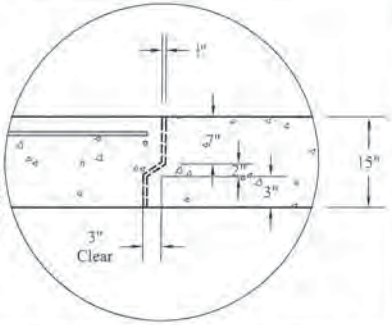

WW-3A to HW-2 Connection Detail

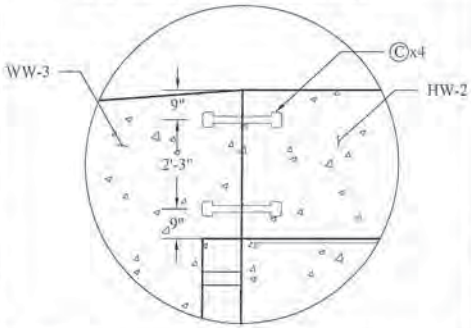

CONTRACTORS VISPE:

Ⓐ 3"Ø PVC Sleeve
Ⓑ 4"Ø PVC Sleeve
Ⓒ Mechanical Bolt Pocket (A.L. Patterson w/ 1"Ø Coil Rod)
Ⓓ Oxford A750-7 Lifting Device
Ⓔ 1"Ø x 12" CX-9 Coil Loop Insert
Ⓕ 1 1/2" x 3 1/2" Continuous Keyway
Ⓖ Solid Lines Indicate ¾" Chamfer
Ⓗ 2" Fiber Formulations

Gary K. Munkelt & Associates
Structural Consulting Engineers
1100 Welsh Rd. Suite 190
North Wales, PA 19454
Ph 215-822-8712 F 215-855-8714

PRECAST CONCRETE BOX CULVERT SHOP DRAWINGS (SDI JOB #15428)

SUPERVISOR: E. Barendse
DETAILER: I. ADAMS
CHECKER: E. Barendse
ENGINEER: G. K. Munkelt

PROJECT NAME: Bridport
PROJECT #: CULV(29) Br.#2
LOCATION: Bridport, VT

Peckham Road Corp.
1557 St. Rt. 9, #3
Lake George, NY 12845
Ph: (518) 747-3353

FABRICATOR:
193 INDUSTRIAL AVE.
WILLISTON, VT 05495
Ph: (802) 658-0201

SD Ireland PRECAST

02/12/15 | CONNECTION_DETAILS | 8_OF_8

S.D. Ireland
Concrete Construction Corporation
802-863-6222 • Fax: 802-860-1528
www.sdireland.com

CONCRETE MIX DESIGN

6000 psi

SCC

SDI MIX CODE: P60TER

DATE: March 28, 2014 **PLANT:** Burlington/Williston, VT

PROJECT: **General DOT Precast - 2014**

FINE AGGREGATE:
ASTM C 33

Source:	Hinesburg Sand & Gravel
Specific Gravity:	2.67 (Abs.: 1.3%)
Fineness Modulus:	≥ 2.6

COARSE AGGREGATE:
ASTM C 33

Source:	S.D. Ireland, Brownell Quarry
Specific Gravity:	2.80 (Abs.: 0.30%)
Description	3/4" 100% Crushed Stone (Size #67)

CEMENT: Ternary Blend Cement; Lefarge North America Lakes and Seaway Re St. Constant, Quebec (Sp. Gvty. 3.02)

ADMIXTURES: Water Reducer (HRWR): Glenium 7500; BASF
Air Entraining Agent: Darex II AEA; Grace Concrete Chemicals

CONSTITUENTS (LBS. /YD³)

		Abs.Vol.
Coarse Aggregate (SSD)	1750	10.02
Fine Aggregate (SSD)	1017	6.10
Cement	800	4.25
Water	304.6	4.88
Air Content (Entrained)	6.5%	1.75
Total	3872	27.00ft³

MIX PROPERTIES

Water Cement Ratios: 0.38
Entrained Air Content: 5.0 % – 9.0%
Dry Unit Weight: 144.2 ± pcf
Spread: 20" to 28"
VSI ≤ 1

***ADMIXTURE(S) DOSEAGE (OZ. /YD³)**

Glenium 7500 (HRWR)	56 - 64
Darex II AEA	2.8

Approved by James Wild, VAOT Composite Materials Engineer 7/17/14

*Admixture dosage rates are subject to change.

BREAK HISTORY±

24-HR.	3400 PSI
7-DAYS	6000 PSI
28-DAYS	6700 PSI

Fax to:	Customer		Approved/Notes	Pennsylvania Insert Corp
Fax#	Project			PO Box 199 Spring City PA 19475 tel: 610-948-9688 fax: 610-948-4975
From	Job#	Ship Date		
Date	PA Insert Quote/Order#	Page _____ of _____		email: sales@pennsylvaniainsert.com web: www.pennsylvaniainsert.com

BOLT POCKET FORMER (for up to 1" bolt)

- Made from durable Urethane for reusability
- Ribbed construction increases strength
- *Replacable 1/4" Threaded Inserts
- **1/4" Galvanized Steel Plate Standard
- Available with magnets to attach to form

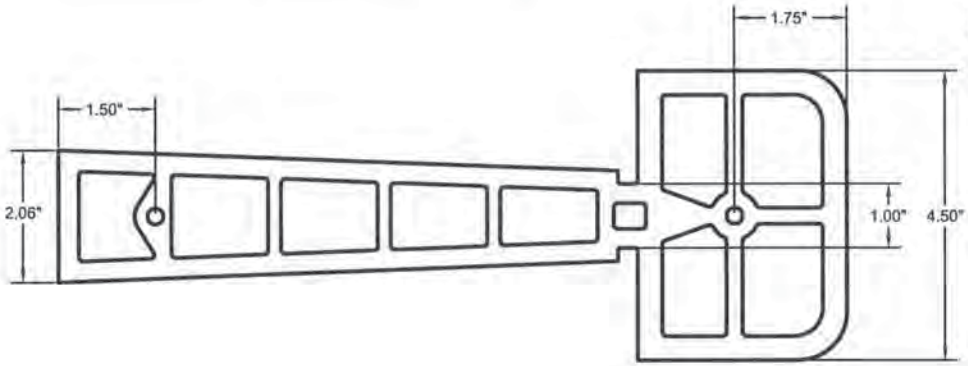

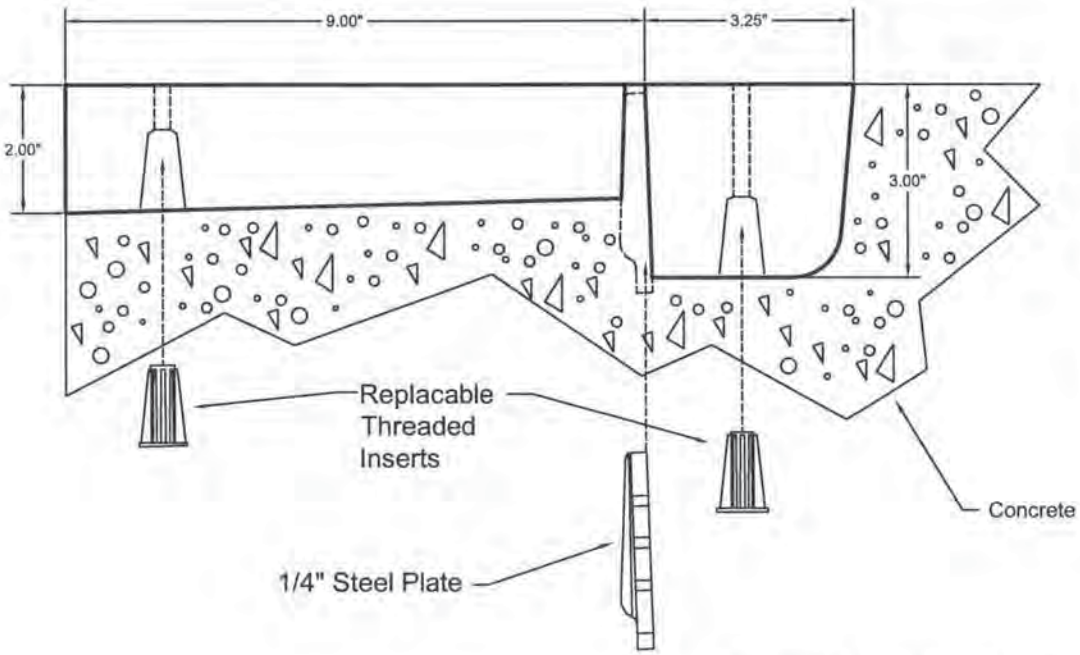

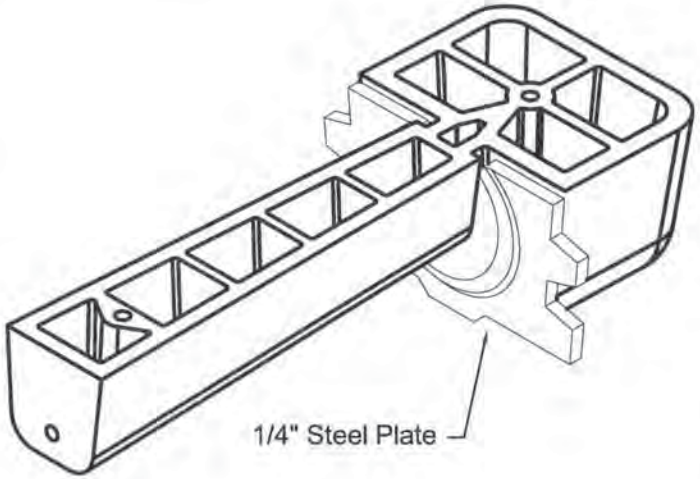

*Threaded Inserts sold separately (Part Number 1200)

**Steel Plate stays in concrete, sold separately (Part Number 4024)

06/03/04

OXFORD Industrial Technologies, LLC

PO Box 736 ▪ Stevenson, CT 06491
www.oxfordtechusa.com
Phone: (203) 268-6030
Fax: (203) 445-1240
info@oxfordtechusa.com

Oxford Lift System®

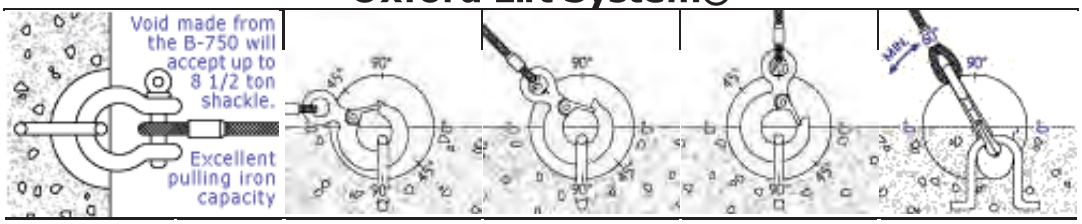

Anchor Product Code	Slab Min. Inches	Safe Working Load @ 90 degree Shear-0 degree Pull	Safe Working Load @ 90 degree Shear-45 degree Pull	Safe Working Load @ 90 degree Tension-90 degree Pull	Safe Working Load @ 90 degree Shear-60 degree Pull
A 500-3	4.00"	4,500	4,000	3,500	4,000
A 500-4	5.00"	8,000	5,500	4,000	5,000
A 500-5	6.00"	10,500	6,500	5,000	5,500
A 750-5	6.00"	12,500	8,000	7,000	7,000
A 750-7	8.00"	15,000	12,500	10,000	10,000

Note: Safe Working Load provides a factor of safety of approximately 4:1

Test Results are based on a minimum concrete compressive strength of 4,000 psi.

<back next>

Home | B-500 & B-750 | S-150 | S-300 | Lift Anchor & Order Form | Concrete Products
Pull Iron Capacity | Anchors & Accessories | Toggle-Lok | Insert/Lift Anchor | Grid-Lok/ Rebar Chair | Helpful Calculations COMING SOON!

Coil Lifting Insert Accessories

(2060) CN-5 COIL NUT

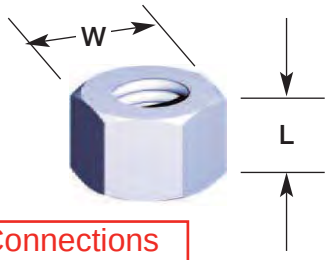

The CN-5 Standard Coil Nut is manufactured from hex stock and is available in 1/2" through 1-1/2" diameters. Dimensions are displayed in the table.

The Standard Coil Nut safe working loads are based on an approximate 5:1 safety factor for lifting applications.

Coil Nut for WingWall Connections

NOTE: Coil Nut – Heavy page 86

CN-5 STANDARD COIL NUT DATA									
Bolt Size		Safe Work Load (Tension)				Nut Length L		Width Across Flats W	
		One CN-5		Two CN-5 or One CN-25					
in.	mm	lbs.	kN	lbs.	kN	in.	mm	in.	mm
1/2	13	1800	8	3600	16	1/2	13	7/8	22
3/4	19	3600	16	7200	32	5/8	15	1 1/8	28
1	25	7200	32	15,000	67	1	25	1 5/8	41
1 1/4	32	10,800	48	22,500	100	1 1/4	32	2	50
1/1/2	38	16,200	72	27,000	120	1 1/2	38	2 3/8	60

Table is based on a 5:1 safety factor for lifting applications.

1) Note that in order to achieve the published safe working loads of Coil Bolts, Coil Rods, etc., two (2) Standard Coil Nuts tightly locked together are required when using the Standard Coil Nut.

To Order, Specify: quantity, name and bolt diameter.

(2062) CN-25 COIL NUT – HEAVY

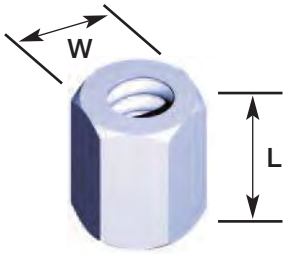

The CN-25 Heavy Coil Nut is manufactured from hex stock like the Standard Coil Nut, but is of sufficient length to develop the safe working load required for heavy form tying systems and precast lifting applications.

The Heavy Coil Nut safe working loads are based on an approximate 5:1 safety factor for lifting applications.

CN-25 HEAVY COIL NUT DATA							
Bolt Size		Safe Work Load (Tension)		Nut Length L		Width Across Flats W	
		Two CN-5 or One CN-25					
in.	mm	lbs.	kN	in.	mm	in.	mm
1/2"	13	3600	16	1	25	7/8	28
3/4"	19	7200	32	1 1/2	38	1 1/8	28
1"	25	15,000	67	2	50	1 5/8	41
1 1/4"	32	22,500	100	2 1/2	64	2	50

Table is based on a 5:1 safety factor for lifting applications.

To Order, Specify: quantity, name and bolt diameter.

Coil Lifting Insert Accessories

(2080) CW-4 FLAT WASHER

The CW-4 Flat Washers are manufactured from high carbon flat steel plate and are designed to provide the required bearing against the form members. Flat Washers are available in many sizes in both standard and heavy versions. Refer to the table for dimensions and safe working loads.

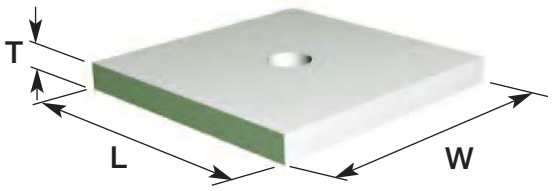

Flat Washer Safe working loads are based on an approximate 5:1 safety factor for lifting applications.

CW-4 FLAT WASHER DATA								
Bolt Size		Type	T		L		W	
in.	mm		in.	mm	in.	mm	in.	mm
1/2	13	Standard	1/4	6	4	100	3	75
3/4	19	Standard	1/4	6	4	100	5	125
1	25	Standard	1/2	13	5	125	5	125
1 1/4	32	Standard	1/2	13	5	125	5	125
1 1/2	38	Standard	3/4	19	5	125	5	125
1/2	13	Heavy	1/4	6	4	100	5	125
3/4	19	Heavy	1/2	13	5	125	5	125
1	25	Heavy	3/	19	7	175	7	175
1 1/4	32	Heavy	3/4	19	7	175	7	175
1 1/2	38	Heavy	3/4	19	7	175	7	175

To Order, Specify: quantity, name and bolt diameter.

Coil Rod and Plate Washer for WingWall Connections

(2102) CR-4 COIL ROD

CR-4 Continuous Coil Rod is manufactured and stocked in 12'-0" lengths. Special lengths are available up to 20'-0".

Requires minimum two (2) Standard CN-5 Coil Nuts or one (1) Heavy CN-25 Coil Nut to develop full safe work load. Minimum coil thread penetration is same as shown for coil bolts. See Table on page 88 to assure minimum coil penetration. May be cut with carborundum blades without thread damage. Do not use cutting torch to cut coil rod.

CR-4 HI-STRENGTH CONTINUOUS COIL ROD SELECTION TABLE					
Bolt Diameter		Safe Work Load			
		Tension		Shear	
In.	mm.	lbs.	kN.	lbs.	kN.
1/2	13	3600	16	2400	11
3/4	19	7200	32	4800	21
1	25	15000	67	10000	44
1-1/4	32	24000	107	16000	71
1-1/2	38	28000	124	18000	83

Table is based on a 5:1 safety factor for lifting applications.

To Order, Specify: quantity, name, bolt diameter and length.

Male Dowel Bars for Headwalls

Table 3, "Basic Development Length of Standard Hooks for Grade 60 Rebar" identifies basic development lengths of hooked rebar embedded in various specified compressive strength normal weight concrete.

Table 4, "Recommended DB-SAE-3 Headed Splicer and Dowel-in Sizes", displays information pertaining to splices utilizing the DB-SAE-3 Headed Splicer shown in the detail below.

Table 5, "Reinforcing Steel Data", shows the ASTM Standards for reinforcing bars.

Rebar Size	NORMAL WEIGHT CONCRETE (psi)		
	3,000	4,000	5,000
#3	8.2	7.1	6.4
#4	11.0	9.5	8.5
#5	13.7	11.9	10.6
#6	16.4	14.2	12.7
#7	19.2	16.6	14.8
#8	21.9	19.0	17.0
#9	24.7	21.4	19.1
#10	27.8	24.1	21.6
#11	30.9	26.8	23.9
#14	37.1	32.1	28.7
#18	49.4	42.8	38.3

Table 3: Basic Development Length of Standard Hooks for Grade 60 Rebar

System Thread Size	DB-SAE-3 Headed Splicer	Embed Length (12D)	Load Capacity	
			1.25 P_y	1.6 Py
5/8"-11unc	#4	6"	15,000	19,200
3/4"-10unc	#5	7-1/2"	23,250	29,760
7/8"-9unc	#6	9"	33,000	42,400
1"-8unc	#7	10-1/2"	45,000	57,600
1-1/8"-8un	#8	12"	59,250	75,840

Table 4: Recommended DB-SAE-3 Headed Splicer Sizes - Grade 60 Rebar

Bar Size Designation	Weight (lbs. per ft.)	Nominal Diameter	
		Diameter (in)	Cross-Section Area (sq. in.)
#4	0.668	0.500	0.20
#5	1.043	0.625	0.31
#6	1.502	0.750	0.44
#7	2.044	0.875	0.60
#8	2.670	1.000	0.79
#9	3.400	1.128	1.00
#10	4.303	1.270	1.27
#11	5.313	1.410	1.56

Table 5: ASTM Standard Rebar Data

Development ℓ_{dh} of Standard Hooks

$$\ell_{hb} = \frac{1200 d_b}{\sqrt{f'_c}}$$

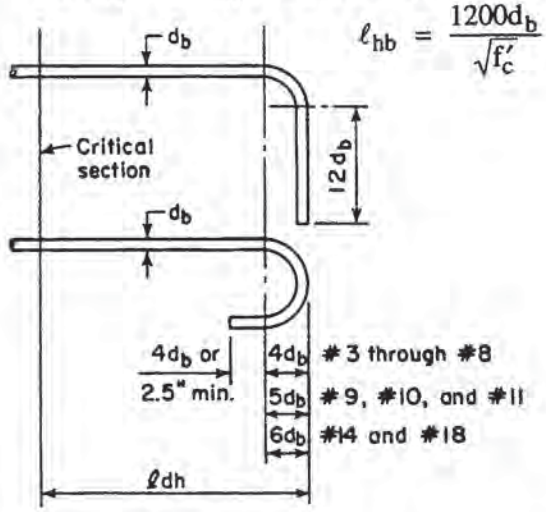

The details displayed show a few of the many, many applications where the versatile Dayton Richmond Dowel Bar Splicer System can be used.

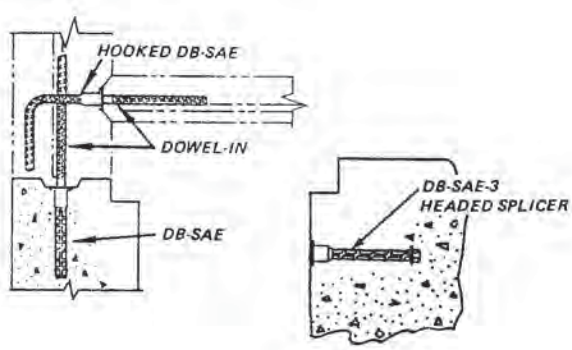

Inserts for Wingwall Connections

Coil Lifting Inserts

CRISS-CROSS COIL INSERT – STRAIGHT (2178)

The Criss-Cross Coil Insert – Straight (2178) is a high strength four strut insert ideally suited for precast concrete edge lift applications. The four strut design and high safe working loads make this insert a good, safe choice for preventing panel failures. The The Criss-Cross Coil Insert – Straight is available in plain or hot dip galvanize finish.

To Order, Specify: quantity, name, bolt diameter, length (L dimension) and finish.

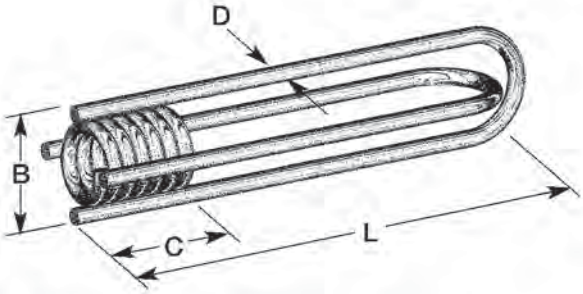

CRISS-CROSS COIL INSERT - STRAIGHT DATA

Bolt Diameter		Insert Length L		Minimum Slab Thickness		Safe Work Load for Edge Lift Tension		Safe Work Load for Edge Lift Shear		Minimum Corner Distance		B		Coil Length C		Wire Diameter D	
in.	mm	in.	mm	in.	mm	lbs.	kN	lbs.	kN	in.	mm	in.	mm	in.	mm	in.	mm
3/4"	19	9"	229	4"	100	3700	16.4	1500	6.7	24"	600	1 11/16"	43	1 5/8"	41	.306"	7.8
3/4"	19	12"	305	4"	100	4600	20.4	1500	6.7	24"	600	1 11/16"	43	1 5/8"	41	.306"	7.8
1"	25	9"	229	5 1/2"	140	4500	20.0	2000	8.9	24"	600	2 1/8"	54	2 1/16"	52	.306"	7.8
1"	25	12"	305	5 1/2"	140	6500	28.9	2500	11.1	24"	600	2 1/8"	54	2 1/16"	52	.306"	7.8
1"	25	9"	229	5 1/2"	140	4500	20.0	2000	8.9	24"	600	2 1/8"	54	2 1/16"	52	.375"	9.5
1"	25	12"	305	5 1/2"	140	6500	28.9	2500	11.1	24"	600	2 1/8"	54	2 1/16"	52	.375"	9.5
1 1/4"	32	9"	229	6"	150	4700	20.9	3500	15.6	24"	600	2 1/2"	63	2 1/16"	52	.440"	11.2
1 1/4"	32	12"	305	6"	150	7500	33.3	3500	15.6	24"	600	2 1/2"	63	2 1/16"	52	.440"	11.2

Table is based on minimum concrete strength of 3,000 psi and a 4:1 safety factor.
Inserts must have a 1/2" setback from the surface of the concrete and sufficient coil penetration by the lifting bolt. See minimum bolt penetration information on page 87.

THIN SLAB COIL INSERT (2185)

The Thin Slab Coil Insert (2185) is a four strut insert fabricated with a wire coil and four deformed (ribbed) wire legs. This insert is applicable for face lift handling of precast panels, slabs and other similar types of precast elements. The Thin Slab Coil Insert is available in plain or hot dip galvanize finish.

To Order, Specify: quantity, name, bolt diameter and finish.

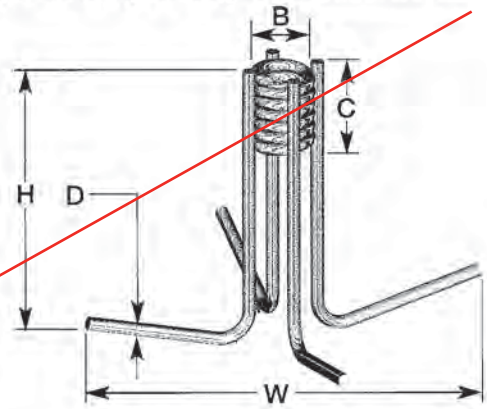

THIN SLAB COIL INSERT DATA

Bolt Diameter		Insert Height H		Safe Work Load (Tension		B		Coil Length C		Wire Diameter D		W		Minimum Edge Distance	
in.	mm	in.	mm	lbs.	kN	in.	mm	in.	mm	in.	mm	in.	mm	in.	mm
3/4"	19	3"	76	2500	11.1	1 5/8"	41	1 3/4"	44	.306"	7.8	7 1/8"	181	9"	230
1"	25	4"	100	3500	15.6	1 7/8"	47	2 1/16"	52	.306"	7.8	9 1/2"	241	12"	305
1 1/4"	31	4"	100	4000	17.8	2 1/4"	57	2 1/16"	52	.375"	9.5	9 3/4"	248	12"	305
1 1/2"	38	4"	100	4000	17.8	2 1/2"	63	2 1/16"	52	.375"	9.5	10"	254	12"	305

Table is based on minimum concrete strength of 3,000 psi and a 4:1 safety factor.
Inserts must have a 1/2" setback from the surface of the concrete and sufficient coil penetration by the lifting bolt. See minimum bolt penetration information on page 87.

FI-42: FLARED LOOP FERRULE INSERT

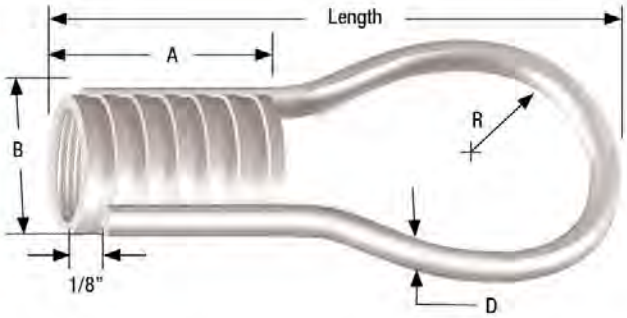

Fabricated by welding a looped strut to a closed-end ferrule, this versatile insert is commonly used to make structural connections and to suspend pipes and other mechanical equipment. Available in 3/8", 1/2", 5/8", 3/4", 7/8" and 1" sizes. Insert available in plated finish.

*Standard inserts not designed for use with hot dip galvanized bolts.

FLARED LOOP FERRULE INSERT DIMENSIONS AND LOAD CHART

Part Number	Bolt Diameter (N.C. Thread)	Threads per Inch (N.C.)	Length	A	B	R	Wire Diameter D	Insert Ultimate Mechanical Capacity (lbs)	In-Concrete Capacity. 3:1 SWL: Min. Edge Distance	In-Concrete Capacity. 3:1 SWL: Tension (lbs)
FI4238P	3/8"	16	2-3/4"	1-1/4"	1"	9/16"	0.243"	6,000	5"	2,000
12P	1/2"	13	2-3/4"	1-3/8"	1-1/8"	9/16"	0.243"	6,000	5"	2,000
FI4258P	5/8"	11	3-1/2"	1-5/8"	1-3/8"	13/16"	0.262"	6,900	5"	2,300
FI4234P	3/4"	10	3-1/2"	1-5/8"	1-5/8"	13/16"	0.262"	7,500	5"	2,500
FI4278P	7/8"	9	6"	1-5/8"	2-1/16"	1-3/8"	0.375"	15,900	8"	5,300
FI421P	1"	8	6"	1-5/8"	2-1/16"	1-3/8"	0.375"	15,900	8"	5,300

Inserts for headwalls

- Safe Working Load is based on 3,000 psi concrete and insert setback 1/2" from the concrete surface.
- Minimum spacing of inserts is 2 x (edge distance).

FI-64: STRAIGHT LOOP FERRULE INSERT

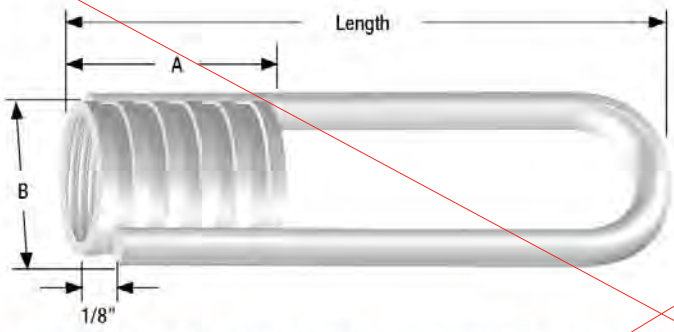

The Straight Loop Ferrule Insert is typically used to attach a precast wall panel to a building frame, as well as to provide attachment of other structural elements that may be required. Available in 1/2", 5/8", 3/4" and 1" sizes. Insert available in plated finish.

*Standard inserts not designed for use with hot dip galvanized bolts.

STRAIGHT LOOP FERRULE INSERT DIMENSIONS AND LOAD CHART

Part Number	Bolt Diameter	Threads per Inch (N.C.)	Length	A	B	Wire Diameter D	Insert Ultimate Mechanical Capacity (lbs)	In-Concrete Capacity. 3:1 SWL: Min. Edge Distance	In-Concrete Capacity. 3:1 SWL: Tension (lbs)
FI64124P	1/2"	13	4-1/8"	1-3/8"	1-1/8"	0.225"	9,000	5"	3,000
FI64126P	1/2"	13	6-1/8"	1-3/8"	1-1/4"	0.306"	15,000	8"	5,000
FI64584P	5/8"	11	4-1/8"	1-5/8"	1-1/4"	0.225"	9,000	5"	3,000
FI64586P	5/8"	11	6-1/8"	1-5/8"	1-5/8"	0.375"	15,000	8"	5,000
FI64344P	3/4"	10	4-1/8"	1-5/8"	1-3/8"	0.225"	9,000	5"	3,000
FI64346P	3/4"	10	6-1/8"	1-5/8"	1-3/4"	0.375"	15,000	9"	5,000
FI6416P	1"	8	6-1/8"	1-5/8"	2-1/8"	0.375"	15,000	9"	5,000

- Safe Working Load is based on 3,000 psi concrete and insert setback 1/2" from the concrete surface.
- Minimum spacing of inserts is 2 x (edge distance).

BASF
The Chemical Company

Technical Data Guide

7 | 07 19 16
Water Repellents

Sealer for exposed surfaces

MasterProtect® H 440 HZ

Breathable, solvent-based, silane penetrating water-repellent sealer

FORMERLY HYDROZO® SILANE 40 VOC

PACKAGING
– 5 gallon (18.9 L) pails
– 53 gallon (201 L) drums

COLOR
Clear

YIELD
Poured in place and precast concrete: 125–225 ft^2/gal (3.1–5.5 m^2/L)

Coverage may vary greatly with porosity of the substrate; extremely porous substrates may require 2 coats. Perform test panels to ensure desired results and coverage rates.

STORAGE
Store in unopened containers in a clean, dry area between 35 and 110° F (2 and 43° C).

SHELF LIFE
18 months when properly stored

VOC CONTENT
Less than 600 g/L less water and exempt solvents

DESCRIPTION
MasterProtect H 440 HZ is a breathable, solvent-based, water repellent sealer containing 40% alkylakoxysilane.

PRODUCT HIGHLIGHTS
- 40% silane
- Excellent depth of penetration
- Water repellent which helps to protect from damage caused by chloride intrusion, extends life of structures
- Solvent based,excellent for cold-weather applications
- Breathability allows interior moisture to escape without damaging sealer
- Does not alter surface appearance
- Surface sealer helps reduce efflorescence, atmospheric staining, and mildew

APPLICATIONS
- Horizontal
- Exterior
- Above grade
- Parking decks
- Bridges
- Stadiums

SUBSTRATES
- Concrete
  - precast
  - prestressed
  - poured in place

HOW TO APPLY
SURFACE PREPARATION
1. Verify substrate has properly cured. Concrete should obtain 80% of design strength, typically achieved within 14–28 days.
2. Clean all surfaces of all sand, surface dust and dirt, oil, grease, chemical films and coatings, and other contaminants prior to application. Power wash, sandblast, or shotblast as necessary to achieve the desired surface condition.
3. Air, material, and surface temperatures should be 40° F (4° C) or higher during application. Do not apply sealer when temperatures are expected to fall below 20° F (-7° C) within 12 hours or when rain is expected within 4 hours following the application. MasterProtect H 440 HZ may be applied to slightly damp surfaces.
4. Caulking and sealant work may be done before or after the application of the sealer. Allow sealant to cure fully cured before application of Master Protect H 440 HZ. Following the application, remove excess product that might pond on a concave sealant joint.

APPLICATION
1. Test a small area of the surface (generally a 5 by 5 ft [1.5 by 1.5 m] section) before starting general application of any clear penetrating sealer to ensure desired performance results, aesthetics and coverage rates. Allow 5–7 days for the product to fully react before evaluating. Contact Technical Service for details.

Technical Data

Composition

MasterProtect H 440 HZ is an alcohol-based alkylalkoxysilane product.

Typical Properties

PROPERTY	VALUE
Active alkylalkoxysilane content, % by weight	> 40
Penetration, in (mm), average depth, depending upon substrate	0.20 (5)
Surface appearance after application	Unchanged

Test Data

PROPERTY	RESULTS	TEST METHOD
Flash point, ° F (° C)	53 (12)	SETA, IPA
Waterproofing after abrasion, %, at 225 ft^2/gal (5.6 m^2/L)	88.4	Alberta Transportation and Utilities Type 1B
Resistance to chloride, lb/yd^3		
Criteria of 1.5 at ½"	< 0.2	
Criteria of 0.75 at 1"	< 0.00	
Water weight gain, % reduction, at 200 ft^2/gal (5 m^2/L)	86 – exceeds criteria	NCHRP 244 Series II-cube test
Absorbed chloride, % reduction, at 200 ft^2/gal (5 m^2/L)	92 – exceeds criteria	NCHRP 244 Series II-cube test
Absorbed chloride, % reduction, at 200 ft^2/gal (5 m^2/L)	99 – exceeds criteria	NCHRP 244 Series IV - Southern climate
Moisture-vapor transmission rate, %	102	OHD-L-35

Test results are averages obtained under laboratory conditions. Reasonable variations can be expected.

2. Stir material thoroughly before and during application.
3. Apply to saturation using low-pressure non-atomizing spray or pouring, followed by a squeegee or a broom for even distribution.

DRYING TIME

Typical drying time for MasterProtect H 440 HZ is 4 hours at 70° F (21° C) and 50% relative humidity. Cooler temperatures or higher relative humidity can extend the drying time.

CLEAN UP

Clean equipment with xylene or MasterSeal 990.

FOR BEST PERFORMANCE

- Do not apply during inclement weather or when inclement weather is anticipated within 12 hours.
- Protect asphalt-based products, such as roofing materials, plastic products, shrubbery, and plant life from overspray.
- Take caution with specially coated glass. Test small areas before application to ensure the product does not discolor the coating.
- To prevent damage to nearby shrubbery and landscaping, cover or protect with drop cloth.
- Paint line striping after the application of the sealer.
- Plastic windows will turn opaque when sprayed with this product.
- Variations in the texture and porosity of the substrate will affect the coverage and performance of the product.
- MasterProtect H 440 HZ will not inhibit water penetration through unsound or cracked surfaces, or surfaces with defective flashing, caulking, or structural waterproofing.
- Make certain the most current versions of product data sheet and SDS are being used; visit master-builders-solutions.basf.us to verify the most current version.
- Proper application is the responsibility of the user. Field visits by BASF personnel are for the purpose of making technical recommendations only and are not for supervising or providing quality control on the jobsite.

HEALTH, SAFETY AND ENVIRONMENTAL

Read, understand and follow all Safety Data Sheets and product label information for this product prior to use. The SDS can be obtained by visiting www.master-builders-solutions.basf.us, e-mailing your request to basfbscst@basf.com or calling 1(800)433-9517. Use only as directed.
For medical emergencies only, call ChemTrec® 1(800)424-9300.

LIMITED WARRANTY NOTICE

BASF warrants this product to be free from manufacturing defects and to meet the technical properties on the current Technical Data Guide, if used as directed within shelf life. Satisfactory results depend not only on quality products but also upon many factors beyond our control. BASF MAKES NO OTHER WARRANTY OR GUARANTEE, EXPRESS OR IMPLIED, INCLUDING WARRANTIES OF MERCHANTABILITY OR FITNESS FOR A PARTICULAR PURPOSE WITH RESPECT TO ITS PRODUCTS. The sole and exclusive remedy of Purchaser for any claim concerning this product, including but not limited to, claims alleging breach of warranty, negligence, strict liability or otherwise, is the replacement of product or refund of the purchase price, at the sole option of BASF. Any claims concerning this product must be received in writing within one (1) year from the date of shipment and any claims not presented within that period are waived by Purchaser. BASF WILL NOT BE RESPONSIBLE FOR ANY SPECIAL, INCIDENTAL, CONSEQUENTIAL (INCLUDING LOST PROFITS) OR PUNITIVE DAMAGES OF ANY KIND.

Purchaser must determine the suitability of the products for the intended use and assumes all risks and liabilities in connection therewith. This information and all further technical advice are based on BASF's present knowledge and experience. However, BASF assumes no liability for providing such information and advice including the extent to which such information and advice may relate to existing third party intellectual property rights, especially patent rights, nor shall any legal relationship be created by or arise from the provision of such information and advice. BASF reserves the right to make any changes according to technological progress or further developments. The Purchaser of the Product(s) must test the product(s) for suitability for the intended application and purpose before proceeding with a full application of the product(s). Performance of the product described herein should be verified by testing and carried out by qualified experts.

CELLULAR JOINT FILLER

sealer between each culvert section

CLOSED-CELL GASKET MATERIAL

What It Is

CLOSED CELL JOINT FILLER is a flexible, compressible material that easily fills difficult joints in concrete pipes and structures. Whether glued onto the joint or placed between the structures, it quickly conforms to the joint profile. CLOSED CELL JOINT FILLER can be supplied as cut and spliced gaskets or as bulk material for field fabrication of gaskets. It has excellent compressibility and is resistant to weather, ozone, acids, and alkalis.

1" x 1" (25 x 25 mm)
25 FT. (7.6 m) ROLLS

1" x 2" (25 x 50 mm)
25 FT. (7.6 m) ROLLS

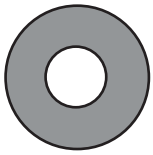

ROUND 3/8" (10 mm) WALL
250 FT. (76.2 m) ROLLS

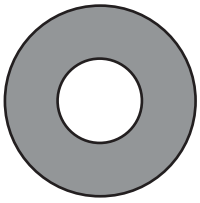

ROUND 1/2" (13 mm) WALL
250 FT. (76.2 m) ROLLS

Why It's Better

- Works with Round, Elliptical, and Arch Pipe.
- Works with Box Culverts and Manholes.
- Available in 25' (7.6 m) or 250' (76.2 m) rolls, or by the foot.
- Also available as cut and spliced gaskets.
- Manufactured of high-quality synthetic rubber.
- Easily compresses to fill irregular joints.
- Clean and easy to use.
- May be used in place of trowelable sealants.
- Easily cut and spliced in the field or in your yard.
- May be glued directly to the joint.

How It Performs

CLOSED CELL JOINT FILLER MATERIAL *meets or exceeds all requirements of:*

ASTM D-1056 - *Flexible Cellular Materials - Sponge or Expanded Rubber*

RECTANGULAR CROSS-SECTIONS
are made from a Neoprene/EPDM Blend.

CIRCULAR TUBING CROSS-SECTIONS
are made from a Nitrile/PVC blend.

Typical Physical Properties

Color	Black
Compression Deflection (psi)	5 - 9
Tensile Strength (psi Min.)	30
Elongation (%Min.)	125
Resilience - Bashore (% rebound Average) (1/2" thickness @ 72ºF)	25 - 40
Shore 00 Durometer	45 - 60
Density (pcf) average	5.5 - 7.5
Water Absorption by Weight (Max.)	10%
Temperature Range (F)	
Low (Flex without cracking)	-70
High (Continuous)	150
High (Intermittent)	200
Heat Aging (7 days @ 158ºF)	
Lineal Shrinkage (Max.)	10%

Scan (or click) Here To View More Info On This Product On The Web!

Press-Seal believes all information is accurate as of its publication date. Information, specifications, and prices are all subject to change without notice. Press-Seal is not responsible for any inadvertent errors. Copyright 2012.

PRESS-SEAL GASKET CORPORATION
Protecting Our Planet's Clean Water Supply
Press-Seal Gasket is an ISO 9001:2008 Registered & ISO 14001:2004 Compliant Company

Phone: 800-348-7325
Fax: (260) 436-1908
Email: sales @press-seal.com
Web: www.press-seal.com

Made in USA

VERSION 1.14