Box Culvert Section Stripping Detail

Weight = 35,285 lbs

W_{ALLOW} = RATED CAPACITY

W_{LL} = LIVE LOAD APPLIED

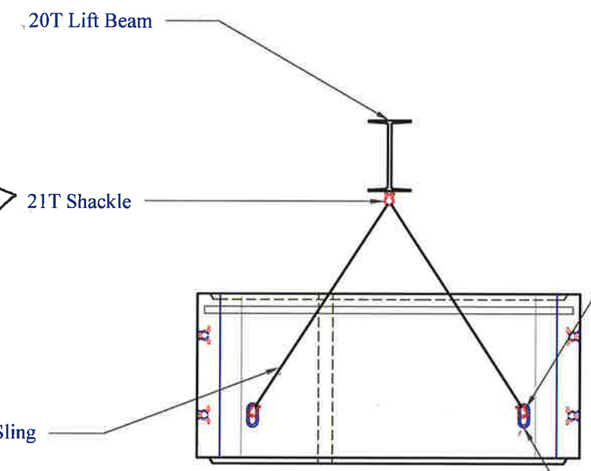

W_{ALLOW} = 42000 lb
W_{LL} = 35285 lb

W_{ALLOW} = 25000 lb/SHACKLE
W_{LL} = 8821 lb/SHACKLE

W_{ALLOW} = 19600 lb
W_{LL} = 8821 lb

W_{ALLOW} = 15000 lb
W_{LL} = 8821 lb

STATE OF VERMONT
GARY K. MUNKELT
NO. 6291
REGISTERED
PROFESSIONAL ENGINEER

STRUCTURAL DESIGN ONLY

CONTRACTORS VTSPE:		Rev.	Date	By	Description

PRECAST CONCRETE BOX CULVERT SHOP DRAWINGS (SDI JOB #15428)

SUPERVISOR: E. Barendse
DETAILER: I. ADAMS
CHECKER: E. Barendse
ENGINEER: G. K. Munkelt

PROJECT NAME: Bridport
PROJECT #: CULV(29) Br.#5
LOCATION: Bridport, VT

Peckham Road Corp.
1557 St. Rt. 9, #3
Lake George, NY 12845
Ph: (518) 747-3353

FABRICATOR:
193 INDUSTRIAL AVE.
WILLISTON, VT 05495
Ph: (802) 658-0201

SD Ireland PRECAST

04/30/15 | LIFTING_DETAILS | 1_OF_3

Box Culvert Section Lifting Detail

Weight = 35,285 lbs

W_{ALLOW} = RATED CAPACITY
W_{LL} = LIVE LOAD APPLIED

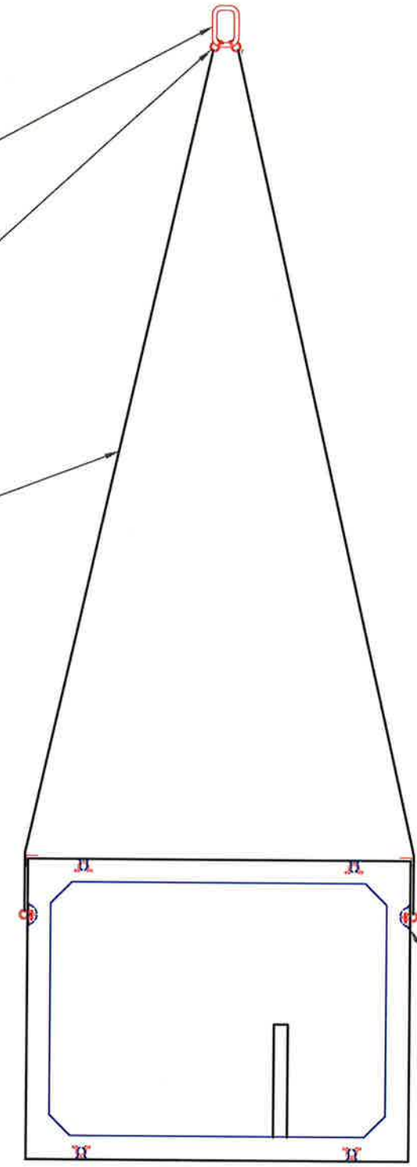

(1) Masterlink 55.5T
W_{ALLOW} = 111000 lb
W_{LL} = 35285 lb

(2) 35T Shackle
W_{ALLOW} = 70000 lb
W_{LL} = 17650 lb

(4) 1" Wire Rope Slings
W_{ALLOW} = 19600 lb
W_{LL} = 8821 lb

(4) 12.5T Shackle
W_{ALLOW} = 25000 lb
W_{LL} = 8821 lb

Oxford A750 Lifting Device
W_{ALLOW} = 15000 lb.
W_{LL} = 8821 lb

5/7/15

STATE OF VERMONT
GARY K. MUNKELT
NO. 8291
REGISTERED
PROFESSIONAL ENGINEER

STRUCTURAL DESIGN ONLY

CONTRACTORS VTSPE:		Rev.	Date	By	Description
	A B C				

PRECAST CONCRETE BOX CULVERT SHOP DRAWINGS (SDI JOB #15428)

SUPERVISOR: E. Barendse
DETAILER: I. ADAMS
CHECKER: E. Barendse
ENGINEER: G. K. Munkelt

PROJECT NAME: Bridport
PROJECT #: CULV(29) Br.#5
LOCATION: Bridport, VT

Peckham Road Corp.
1557 St. Rt. 9, #3
Lake George, NY 12845
Ph: (518) 747-3353

FABRICATOR:
193 INDUSTRIAL AVE.
WILLISTON, VT 05495
Ph: (802) 658-0201

SD Ireland PRECAST

04/30/15 | LIFTING_DETAILS | 2_OF_3

Box Culvert End Section Lifting Detail

Weight = 29,530 lbs

W_{ALLOW} = RATED CAPACITY

W_{LL} = LIVE LOAD APPLIED

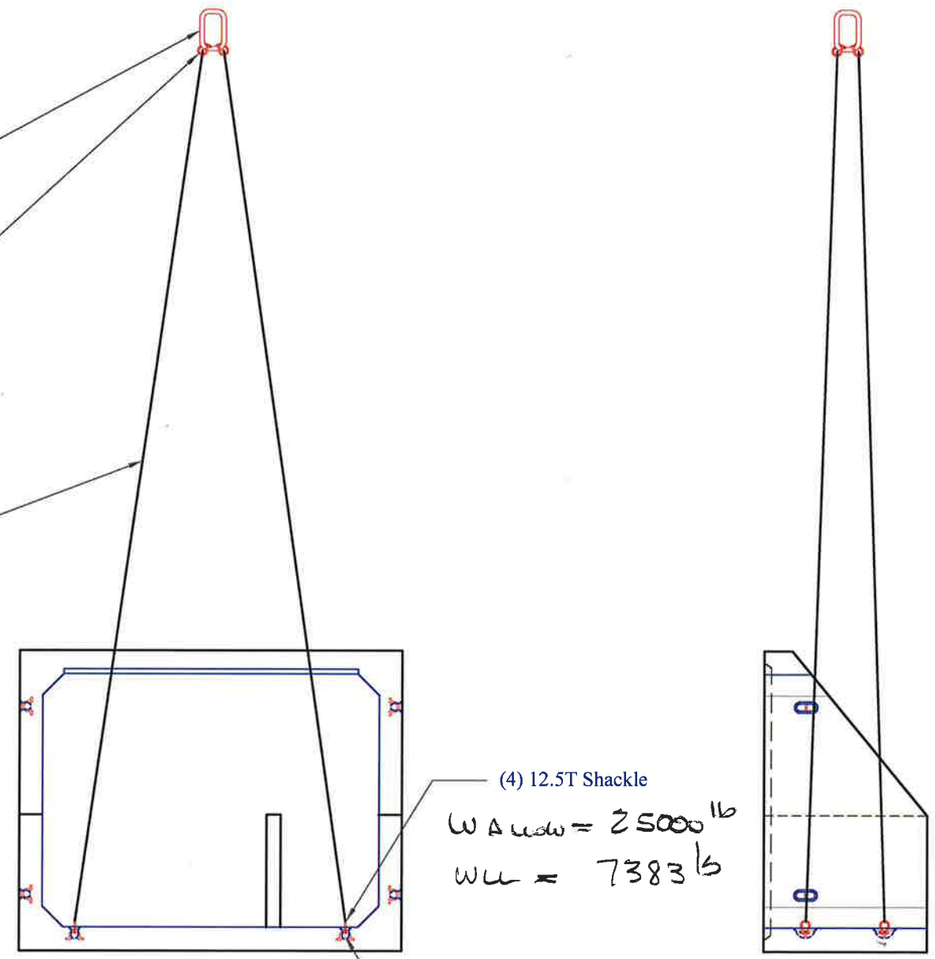

W_{ALLOW} = 111000 lb
W_{LL} = 29530 lb

W_{ALLOW} = 70000 lb
W_{LL} = 14765 lb

W_{ALLOW} = 19600 lb
W_{LL} = 7383 lb

W_{ALLOW} = 25000 lb
W_{LL} = 7383 lb

W_{ALLOW} = 15000 lb
W_{LL} = 7383 lb

STRUCTURAL DESIGN ONLY

5/7/15

STATE OF VERMONT
GARY K. MUNKELT
NO. 6291
REGISTERED
PROFESSIONAL ENGINEER

CONTRACTORS VTSPE:		Rev.	Date	By	Description

PRECAST CONCRETE BOX CULVERT SHOP DRAWINGS (SDI JOB #15428)

SUPERVISOR: E. Barendse
DETAILER: I. ADAMS
CHECKER: E. Barendse
ENGINEER: G. K. Munkelt

PROJECT NAME: Bridport
PROJECT #: CULV(29) Br.#5
LOCATION: Bridport, VT

Peckham Road Corp.
1557 St. Rt. 9, #3
Lake George, NY 12845
Ph: (518) 747-3353

FABRICATOR:
193 INDUSTRIAL AVE.
WILLISTON, VT 05495
Ph: (802) 658-0201

SD Ireland PRECAST

04/30/15 | LIFTING_DETAILS | 3_OF_3