Telephone 215-855-8713 FAX 215-855-8714

GARY K. MUNKELT & ASSOCIATES

Consulting Engineers
Precast Concrete, Structural, Civil

1180 Welsh Rd. Suite 190 North Wales, PA 19454

PROJECT: DESIGN PRECAST CONCRETE BOX CULVERT
12'-0" SPAN x 9'-0" RISE

CLIENT: S. D. IRELAND COMPANIES
WILLISTON, VT

JOB: BRIDGE NO. 5 (STA 22 + 80.82)
STATE OF VERMONT PROJECT – STP. CULV 29
BRIDPORT, VT

5/7/15

TABLE OF CONTENTS

Title	Sheet
General Specifications	2
Description of Product	3 - 8
Calculations – Box Culvert	9 - 37
Appendix A: Headwall Calculation	
Appendix B: Cutoff Wall Calculation	
Appendix C: Loads on Soil	
Appendix D: Design Inlet & Outlet Box Section	

STATE OF VERMONT
GARY K. MUNKELT
NO. 6291
REGISTERED
PROFESSIONAL ENGINEER

Revised: 05/07/15
Revised: 03/26/15
Dated: 02/12/15

GKM Job No. 150216

GENERAL SPECIFICATIONS

1. Precast Concrete shall be designed to obtain a strength of 5,000 psi in 28 days. Material shall meet requirements of ACI 318.

2. Reinforcing steel for rebar shall be Grade 60 (obtain yield strength of 60,000 psi) and meet requirements of ASTM A615. Reinforcing steel for welded wire fabric shall be Grade 65 (obtain yield strength of 65,000 psi) and meet requirements of A185.

3. Weight of Concrete – 150b/ft^3

4. Weight of Soil – 120 lb/ft^3

5. AASHTO HL-93 live load at surface.

6. Top slab is 2.00 ft. maximum below grade.

7. Soil is assumed to have properties such that Ka = 0.33

REFERENCES

1. ASTM C 1577-10 titled "Standard Specification for Precast Reinforced Concrete Monolithic Box Sections for Culverts, Storm Drains, and Sewers Designed According to AASHTO LRFD".

2. ACI 318-10 titled "Building Code Requirements for Reinforced Concrete".

3. AASHTO LRFD Bridge Design Specifications 2012 Edition.

4. BRASS-CULVERT Version 2.3.0 by Wyoming Department of Transportation

Proposed Bridge Improvement Project

Bridport STP CULV(29)

Bridge #5

Concrete:

Mix Designation: P60TER
1. Specified Mix Design - 5000 PSI
2. Proposed Mix Design - 6000 PSI
3. Striping Strength - 3000 PSI
4. Handling Strength - 3000 PSI
5. Shipping Strength - 5000 PSI
6. Install Strength - 5000 PSI
7. Traffic Loading - 5000 PSI

Fabrication Tolerances:
1. Width ±1/4"
2. Height ±1/4"
3. Length ±1/2"
4. Rebar Cover 2" Min. (Unless Noted Otherwise)
5. Rebar Spacing ±1"
6. Rebar Clearance ±1/4"
7. Insert Placement ±1/4"

Design Notes:
1. Design is in accordance w/ ASTM C1577, PCI MNL135, VAOT540 & AASHTO 2012 LRFD bridge design specs fifth edition
2. Any conflict between tolerances listed above shall result in the usage of the stricter tolerance
3. Design live load = HL-93
4. Materials and manufacturing shall conform to ASTM C1433
5. Earth Cover: ±1'-9" Soil Cover

Installation:

1. Sub Base for Box Culvert / Cut Off Walls to be Compacted and Level
2. Precast Cut Off Walls + Wing Walls to be installed
3. All Elevations are to be Checked and Verified they Match Those of Plan Set
4. Begin Sequence of Installing All Box Culvert Sections
5. Clean Granular Backfill for structures used for Backfill of Footers & of Box Culvert so water can reach weep holes if applicable
6. Fill all Lifting Holes, Bolt Pockets and Box Culvert grooves and seams w/ non-shrink grout. Applied by Site Contractor.
7. ASTM C1675-11 Box culvert installation guidelines shall be followed.

Reinforcing:

General Notes:
1. Reinforing Steel -
   a. Precast box sections, headwalls, wing walls, & cut off walls shall be level I uncoated bar ASTM A615
2. Materials and manufacturing shall conform to ASTM C1433

Tolerances:
1. Spacing ±1"
2. Clearance +1/4"

Lap Lengths:
1. Per AASHTO 5.11.2.1.1 & 5.11.5.3.1

Joint Treatment:

Vertical Seams:
Per VTrans approved product list 780.02
Overhead & vertical concrete repair mortar
Applied by site contractor

Horizontal Seams / Grout:
Per VTrans approved product list 707.03
Mortar, type IV
Applied by site contractor

Waterproofing:

1. Silane sealer applied in precast yard on all exposed surfaces (headwalls and top of wingwalls.)

Miscellaneous:

1. All bolt pocket hardware & wingwall hardware to be uncoated, black steel & shall remain in place.
2. All exposed edges of concrete shall be chamfered.
3. Concrete leveling pad for the cutoff walls is to be poured on site by the site contractor.
4. All lift anchors and embedded items will be made in America.

Legend:

- (A) 3"Ø PVC Sleeve
- (B) 4"Ø PVC Sleeve
- (C) Mechanical Bolt Pocket (w/ 1"Ø Coil Rod)
- (D) Oxford A750-7 Lifting Device - Allow 6" movement to avoid rebar conflict
- (E) 1 1/2" x 3 1/2" Continuous Keyway
- (F) Solid Lines Indicate ¾" Chamfer
- (G) ½" FX-5 Ferrule Loop Insert

3 of 37

CONTRACTORS VTSPE:	Rev.	Date	By	Description
	1	05/06/15	IBA	Changes per Redesign

PRECAST CONCRETE BOX CULVERT SHOP DRAWINGS (SDI JOB #15428)

SUPERVISOR: E. Barendse
DETAILER: I. ADAMS
CHECKER: E. Barendse
ENGINEER: G. K. Munkelt

PROJECT NAME: Bridport
PROJECT #: CULV(29) Br.#5
LOCATION: Bridport, VT

Peckham Road Corp.
1557 St. Rt. 9, #3
Lake George, NY 12845
Ph: (518) 747-3353

FABRICATOR:
193 INDUSTRIAL AVE.
WILLISTON, VT 05495
Ph: (802) 658-0201

SD Ireland PRECAST

04/20/15 | COVER PAGE | 1 OF 6

Plan View

Table of Units				
Name	Qty	Length	Vol.(CY)	Wt.(lbs.)*
BC-1	1	5'-9$\frac{7}{8}$"	7.38	29,530
BC-2A*	1	5'-9$\frac{7}{8}$"	9.38	37,510
BC-2B	5	5'-9$\frac{7}{8}$"	8.82	35,285
BC-2C*	1	5'-9$\frac{7}{8}$"	9.38	37,510
BC-3	1	5'-9$\frac{7}{8}$"	7.38	29,530
CW-1	1	13'-8"	1.60	6,410
CW-2	1	13'-8"	1.60	6,410

* Headwall Included in BC-2A and BC-2C

Note: Baffle weight included in all BC sections

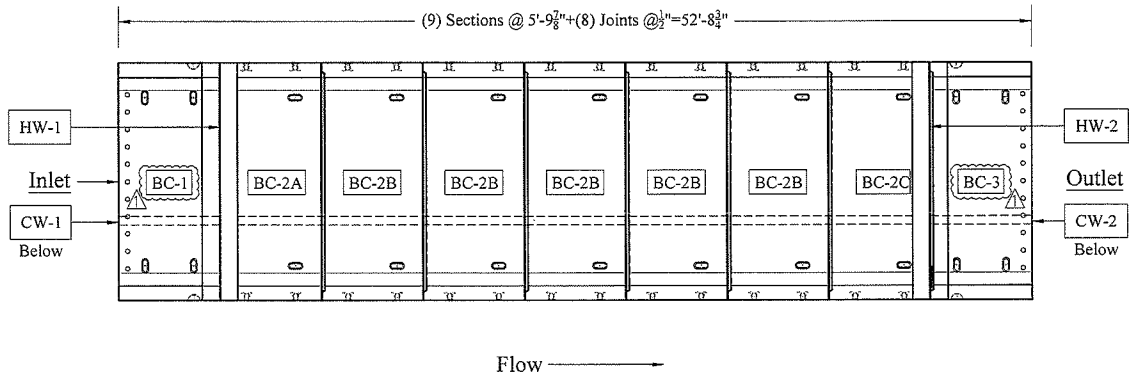

Culvert Specifications	
Inside Dimensions	12'-0"Wx9'-0"H
Waterway Area	76 Sq. Ft.
Top Slab Thickness	10"
Side Wall Thickness	10"
Bottom Slab Thickness	10"

Section View

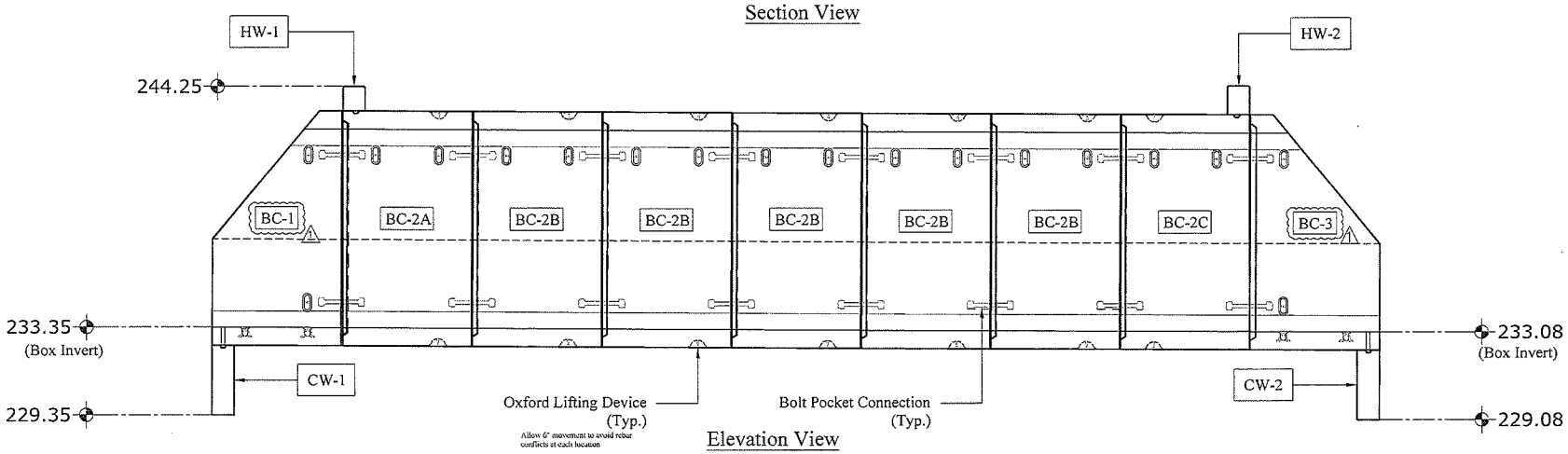

Elevation View

4 of 37

CONTRACTORS VTSPE:	Rev.	Date	By	Description
	1	05/06/15	IBA	Changes per Redesign

PRECAST CONCRETE BOX CULVERT SHOP DRAWINGS (SDI JOB #15428)

SUPERVISOR: E. Barendse
DETAILER: I. ADAMS
CHECKER: E. Barendse
ENGINEER: G. K. Munkelt

PROJECT NAME: Bridport
PROJECT #: CULV(29) Br.#5
LOCATION: Bridport, VT

Peckham Road Corp.
1557 St. Rt. 9, #3
Lake George, NY 12845
Ph: (518) 747-3353

FABRICATOR:
193 INDUSTRIAL AVE.
WILLISTON, VT 05495
Ph: (802) 658-0201

SD Ireland PRECAST

04/20/15 | PLAN ELEVATION | 2 OF 6

BC-2A Detail

Note: See Sh. 8 for Additional Details

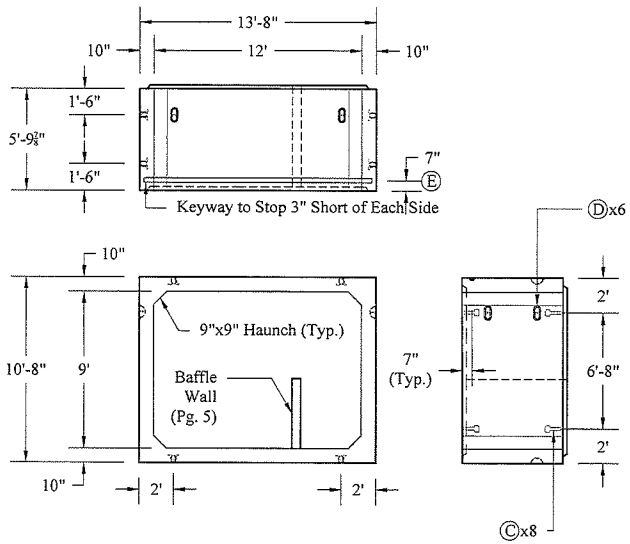

BC-2B Detail

Note: See Sh. 8 for Additional Details

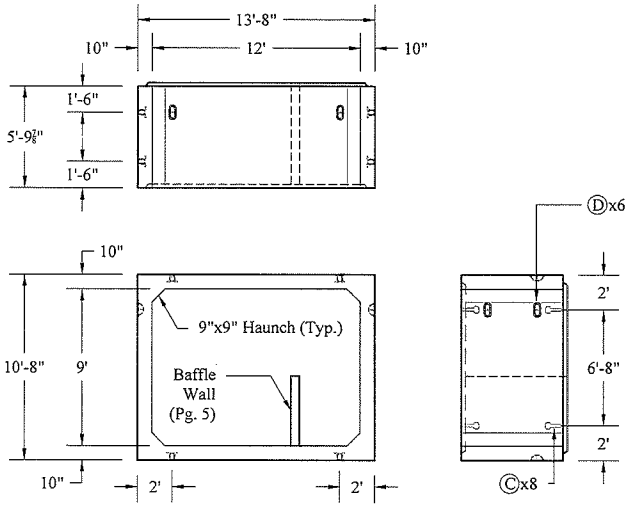

BC-2C Detail

Note: See Sh. 8 for Additional Details

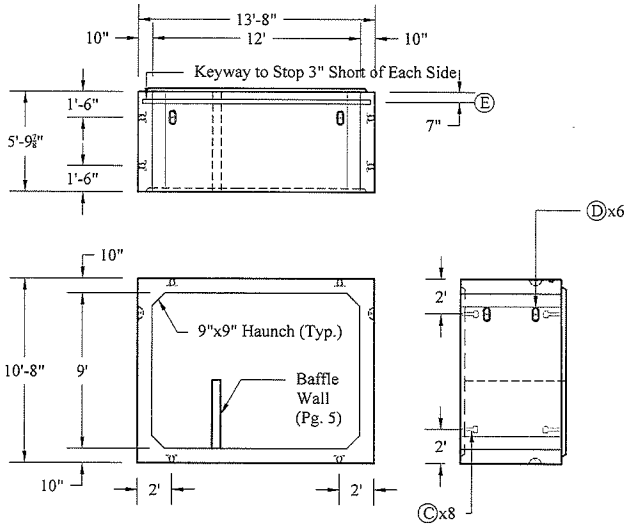

Box Section Reinforcement Detail

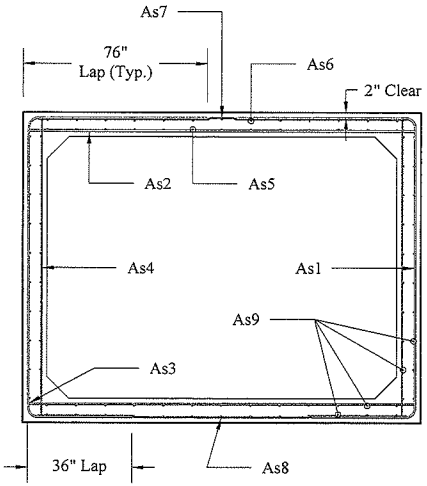

Rebar Schedule

Mark	Size	Max Spacing	Length	Type	A	B	
As1	#5	6"	236"	Bent	36"	124"	76"
As2	#5	5"	160"	Str	160"		
As3	#5	6"	160"	Str	160"		
As4	#4	9"	124"	Str	124"		
As5	#5	10"	65"	Str	65"		
As6	#4	9"	65"	Str	65"		
As7	#4	9"	160"	Str	160"		
As8	#4	9"	160"	Str	160"		
As9	#4	12"	65"	Str	65"		

Notes: 2" Clear Typical Unless Noted Otherwise

5 of 37

CONTRACTORS VTSPE:
- Ⓐ 3"Ø PVC Sleeve
- Ⓑ 4"Ø PVC Sleeve
- Ⓒ Mechanical Bolt Pocket (w/ 1"Ø Coil Rod)
- Ⓓ Oxford A750-7 Lifting Device
- Ⓔ 1 1/2" x 3 1/2" Continuous Keyway
- Ⓕ Solid Lines Indicate ¾" Chamfer
- Ⓖ ½" FX-5 Ferrule Loop Insert

Rev.	Date	By	Description
1	05/06/15	IBA	Changes per Redesign

PRECAST CONCRETE BOX CULVERT SHOP DRAWINGS (SDI JOB #15428)

SUPERVISOR: E. Barendse
DETAILER: I. ADAMS
CHECKER: E. Barendse
ENGINEER: G. K. Munkelt

PROJECT NAME: Bridport
PROJECT #: CULV(29) Br.#5
LOCATION: Bridport, VT

Peckham Road Corp.
1557 St. Rt. 9, #3
Lake George, NY 12845
Ph: (518) 747-3353

FABRICATOR:
193 INDUSTRIAL AVE.
WILLISTON, VT 05495
Ph: (802) 658-0201

SD Ireland PRECAST

04/20/15 | BOX SECTIONS 1 | 3 OF 6

BC-1 Detail

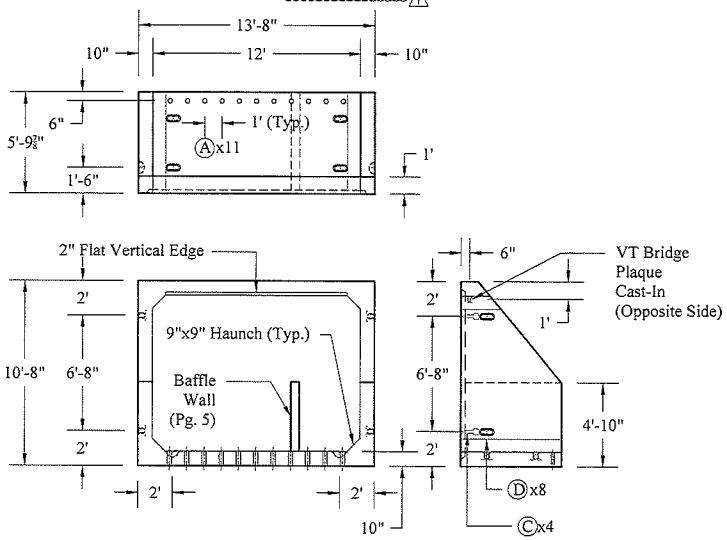

End Box Section Reinforcement Detail

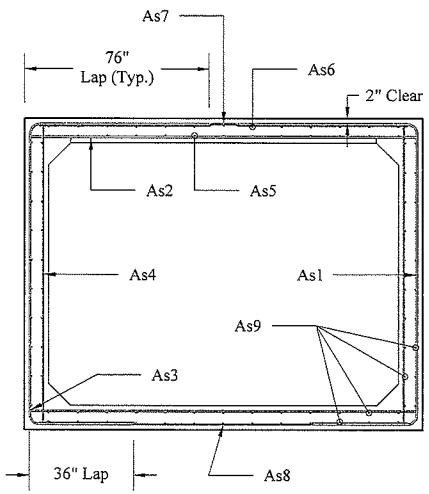

Rebar Schedule

Mark	Size	Max Spacing	Length	Type	A	B	
As1	#5	6"	Varies	Bent	36"	Vrs	76"
As2	#5	5"	160"	Str	160"		
As3	#5	6"	160"	Str	160"		
As4	#4	9"	Varies	Str	Vrs		
As5	#5	10"	Varies	Str	Vrs		
As6	#4	9"	Varies	Str	Vrs		
As7	#4	9"	160"	Str	160"		
As8	#4	9"	160"	Str	160"		
As9	#4	12"	Varies	Str	Vrs		

Notes: 2" Clear Typical Unless Noted Otherwise

BC-3 Detail

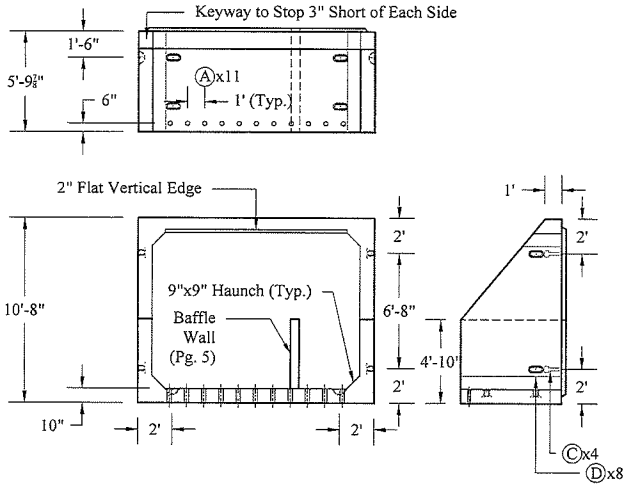

Baffle Wall Detail

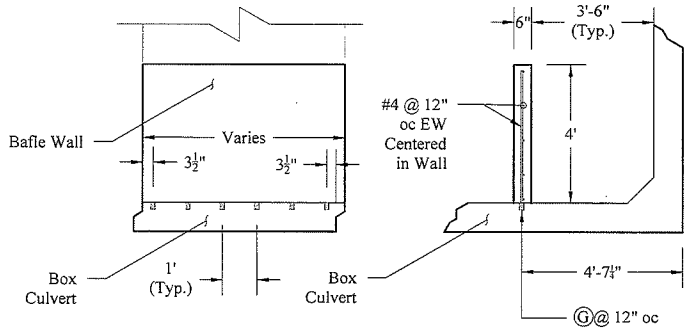

Side Elevation

Front Elevation

6 of 37

CONTRACTORS VISPE:
- Ⓐ 3"Ø PVC Sleeve
- Ⓑ 4"Ø PVC Sleeve
- Ⓒ Mechanical Bolt Pocket (w/ 1"Ø Coil Rod)
- Ⓓ Oxford A750-7 Lifting Device
- Ⓔ 1 1/2" x 3 1/2" Continuous Keyway
- Ⓕ Solid Lines Indicate ¾" Chamfer
- Ⓖ ½" FX-5 Ferrule Loop Insert

Rev.	Date	By	Description
1	05/06/15	IBA	Changes per Redesign

PRECAST CONCRETE BOX CULVERT SHOP DRAWINGS (SDI JOB #15428)

SUPERVISOR: E. Barendse
DETAILER: I. ADAMS
CHECKER: E. Barendse
ENGINEER: G. K. Munkelt

PROJECT NAME: Bridport
PROJECT #: CULV(29) Br.#5
LOCATION: Bridport, VT

Peckham Road Corp.
1557 St. Rt. 9, #3
Lake George, NY 12845
Ph: (518) 747-3353

FABRICATOR:
193 INDUSTRIAL AVE.
WILLISTON, VT 05495
Ph: (802) 658-0201

SD Ireland PRECAST

04/20/15 | WING WALLS 1 | 4 OF 6

CW-1/2 Detail

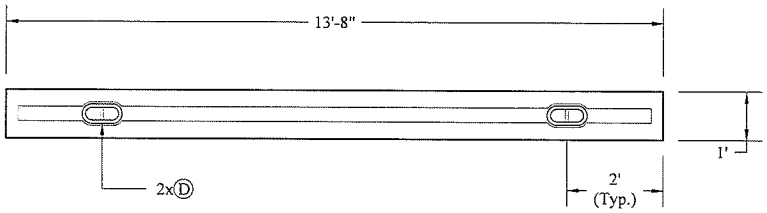

Headwall 1 Detail

(See Reinforcing Details on Sheet 7)

Note: - Secondary Pour
- Not Battered

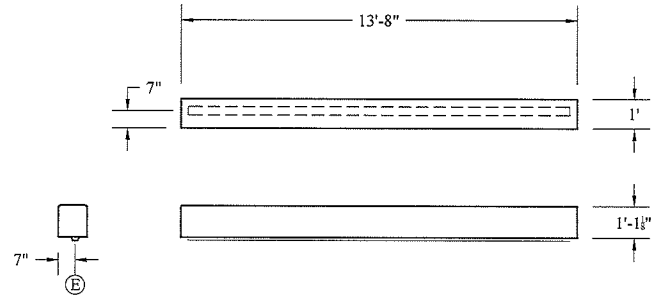

Cutoff Wall Reinforcement Detail

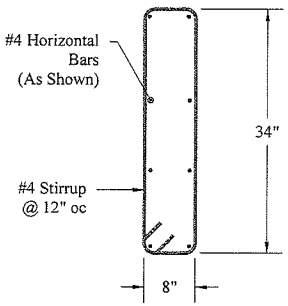

CW-1 Detail

Note: 2" Clear Cover

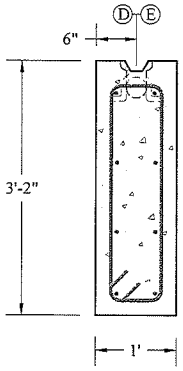

CW-2 Detail

Note: 2" Clear Cover

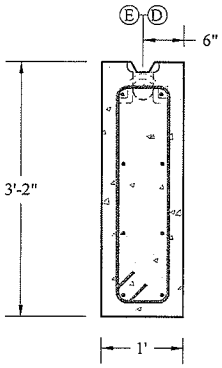

7 of 37

CONTRACTORS VISPE:
- (A) 3"Ø PVC Sleeve
- (B) 4"Ø PVC Sleeve
- (C) Mechanical Bolt Pocket (w/ 1"Ø Coil Rod)
- (D) Oxford A750-7 Lifting Device
- (E) 1 1/2" x 3 1/2" Continuous Keyway
- (F) Solid Lines Indicate ¾" Chamfer
- (G) ½" FX-5 Ferrule Loop Insert

Rev.	Date	By	Description
1	05/06/15	IBA	Changes per Redesign

PRECAST CONCRETE BOX CULVERT SHOP DRAWINGS (SDI JOB #15428)

SUPERVISOR: E. Barendse
DETAILER: I. ADAMS
CHECKER: E. Barendse
ENGINEER: G. K. Munkelt

PROJECT NAME: Bridport
PROJECT #: CULV(29) Br.#5
LOCATION: Bridport, VT

Peckham Road Corp.
1557 St. Rt. 9, #3
Lake George, NY 12845
Ph: (518) 747-3353

FABRICATOR:
193 INDUSTRIAL AVE.
WILLISTON, VT 05495
Ph: (802) 658-0201

SD Ireland PRECAST

04/20/15 | HW CW DETAILS | 5 OF 6

HW - Rebar Schedule						
Mark	Size	Max Spacing	Length	Type	A	B
As1	#4	12"	14"	Bent	5"	9"
As2	#4	12"	17"	Bent	8"	9"
As3	#4	12"	17"	Bent	5"	12"
As4	#4	12"	20"	Bent	8"	12"

HW to BC Connection Detail

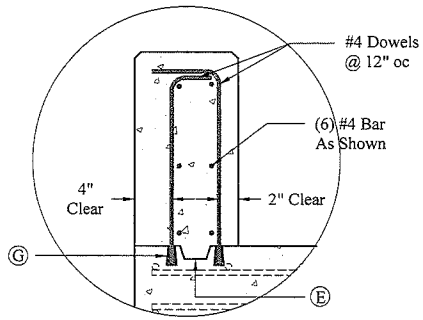

Bolt Pocket Connection Detail -Ⓒ

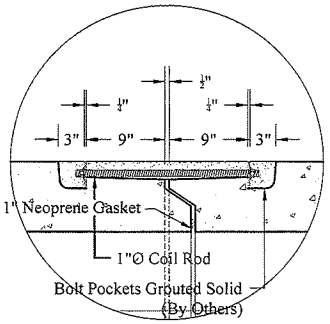

Headwall 2 Detail

(See Reinforcing Details on Sheet 7)

Note: - Secondary Pour
- Not Battered

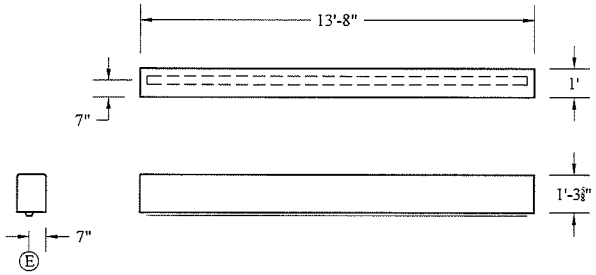

HW-1 Reinforcement Detail

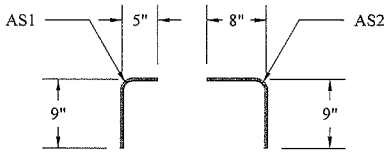

Keyway Connection Detail -Ⓔ

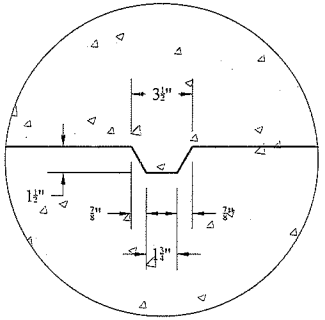

Headwall 2 Detail

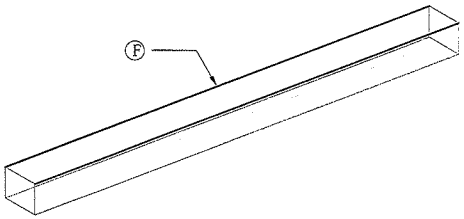

HW-2 Reinforcement Detail

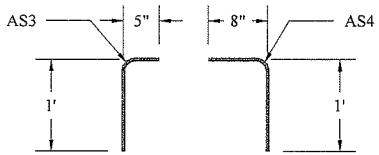

CW to BC Connection Detail

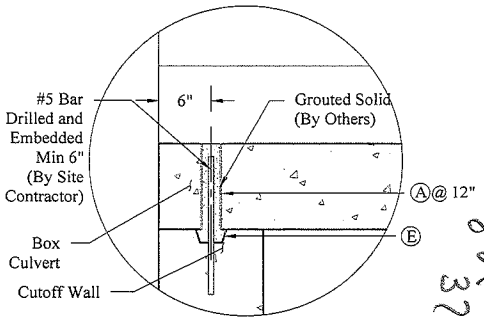

8 of 32

CONTRACTORS VTSPE:

- Ⓐ 3"Ø PVC Sleeve
- Ⓑ 4"Ø PVC Sleeve
- Ⓒ Mechanical Bolt Pocket (w/ 1"Ø Coil Rod)
- Ⓓ Oxford A750-7 Lifting Device
- Ⓔ 1 1/2" x 3 1/2" Continuous Keyway
- Ⓕ Solid Lines Indicate 3/4" Chamfer
- Ⓖ 1/4" FX-5 Ferrule Loop Insert

Rev.	Date	By	Description
1	05/06/15	IBA	Changes per Redesign

PRECAST CONCRETE BOX CULVERT SHOP DRAWINGS (SDI JOB #15428)

SUPERVISOR: E. Barendse
DETAILER: I. ADAMS
CHECKER: E. Barendse
ENGINEER: G. K. Munkelt

PROJECT NAME: Bridport
PROJECT #: CULV(29) Br.#5
LOCATION: Bridport, VT

Peckham Road Corp.
1557 St. Rt. 9, #3
Lake George, NY 12845
Ph: (518) 747-3353

FABRICATOR:
193 INDUSTRIAL AVE.
WILLISTON, VT 05495
Ph: (802) 658-0201

SD Ireland PRECAST

04/20/15

CONNECTION DETAILS

6 OF 6

BRASS-CULVERT

```
                    BRASS-CULVERT(LRFD)  Version 2.3.0

 DATE :  3/24/2015        TIME : 13:24:50

 Input Filename                   : C:\BRASS\CULVERT\Examples\SD Ireland - Bridport 5 - Revised 3-24-15.DAT
 Output Filename                  : C:\BRASS\CULVERT\Examples\SD Ireland - Bridport 5 - Revised 3-24-15.xml
 Output Filename for Live Loads   : C:\BRASS\CULVERT\Examples\SD Ireland - Bridport 5 - Revised 3-24-15_LL.OUT

 The following filenames may be used in this run
 Live Load Influence Values       File name : C:\BRASS\CULVERT\Examples\SD Ireland - Bridport 5 - Revised 3-24-15_INF.OUT
 Drawing                          File name : C:\BRASS\CULVERT\Examples\SD Ireland - Bridport 5 - Revised 3-24-15.drw
 Live Load Influence Ordinates    File name : C:\BRASS\CULVERT\Examples\SD Ireland - Bridport 5 - Revised 3-24-15.ill
 Live Load Actions (w/o DF or IM) File name : C:\BRASS\CULVERT\Examples\SD Ireland - Bridport 5 - Revised 3-24-15.oll
 Intermediate Computations        File name : C:\BRASS\CULVERT\Examples\SD Ireland - Bridport 5 - Revised 3-24-15.ooo
 Data Modelling                   File name : C:\BRASS\CULVERT\Examples\SD Ireland - Bridport 5 - Revised 3-24-15.tmp

COMMENTS            THIS FILE WAS CREATED BY THE BRASS-CULVERT GUI.
COMMENTS            DO NOT EDIT THIS FILE!
COMMENTS           JOB DESCRIPTION:
TITLE              S.D. IRELAND - BRIDPORT
STRUCTID           12-0 X 9-0
AGENCY
COMMENTS
UNITSIN            US
UNITSOUT           US
COMMENTS           ANALYSIS CONTROL:
TYPE               PC
FUNCT              DESREV
LRFR               NO
IRELEASE           NO
IDSN               LRFD
KBASE              FULL
KHACH              YES
EPOXY              NO
EDGE-STRIP         NO
LRFD-SHEAR         0
DNEG               0.0000
COMMENTS           OUTPUT CONTROL:
MTEN               YES
IBSH               NO
IINFN              NO
LIVELO             NO
DEFAULTS           YES
LOOPS              NO
INTERMEDIATE       NO
COMMENTS           MATERIAL PROPERTIES:
FCONC              5000.000
CE                 4074280.000
CWGT               150.000
ZEE                98.000
EXP_FACTOR         0.750
EWGT               120.000
AWGT               145.000
FYST               60000.000
CN                 7.1178
COMMENTS           BOX GEOMETRY:


NBOX               1
NSPAN              12.0000
NHITE              9.0000
LENG               5.8200
BWIDTH             41.0000
CBWIDTH            36.0000
TSLAB              10.0000
KFXTS              F
BSLAB              10.0000
KFXBS              F
WALLR              10.0000
KFXW               F
COMMENTS           SKEW:
CSKEW              0.0000
COMMENTS           HAUNCHES:
TFILT              9.0000
BFILT              9.0000
COMMENTS           CONCRETE COVER:
COVS               2.0000
COVB               2.0000
```

```
COVW              2.0000
COVIN             2.0000
COMMENTS          DEAD LOADS:
PRESS             60.000
PMIN              30.000
PWAT              0.000
NFILL             1.9900
NWEAR             0.0000
FILLFA            1.1500
SIFACT            1.1500
COMMENTS          LIVE LOADS:
LVLD              HL-93-TRUCK
LVLD              HL-93-TANDEM
LVLD              HL-93-LANE
LVOMT             YES
LLPATCH           PL
SURCH_USE         YES
NLANES            0
LIMIT_DIST        NO
LRFDDF            YES
COMMENTS          REBAR REVIEW:


DESREV            YES
TCBSZ             5
TCBSP             6.0000
BCBSZ             5
BCBSP             6.0000
TSIFTSZ           5
TSIFTSP           5.0000
TSOFTSZ           4
TSOFTSP           9.0000
BSIFTSZ           5
BSIFTSP           6.0000
BSOFTSZ           4
BSOFTSP           9.0000
EWIFVSZ           4
EWIFVSP           9.0000
EWOFVSZ           5
EWOFVSP           6.0000

End of Input File No.  1
==================================================================================================
```

```
Note:
    The following list of variables are used in the
       application.  They are shown in US units because
       that is the internal computational mode.

    The first set are the variables defaulted
       from input and the second set are system
       variables.
```

```
Units
USSI_UNITS:      Input Units                          =      US
USSI_UNITS_OU:   Output Units                         =      US
```

```
Design Variables
LRFDDF:  Use LRFD method for bot slab load distrib.   =       T
CUTYPE:  Precast(PC) or Cast in Place(CIP) Culvert    =      PC
IDSN:    Design Method                                =    LRFD
FUNCT:   Design (DESIGN) or Design Review (DESREV)    =  DESREV
IRELEASE:Moment Continuity Released (@ end of walls)  =       F
DNEG:    Distance to Neg. Moment Computation Point    =    0.00
```

```
Output Control Variables
MTEN:    Output Moment-Shears                         =       T
IINFN:   Output Influence Line                        =       F
IBSH:    Output Bar Schedule                          =       F
```

Standard Load Variables

LVLD:	Live Load Vehicle Name	=	HL-93-TRUCK
LVLD:	Live Load Vehicle Name	=	HL-93-TANDEM
LVLD:	Live Load Vehicle Name	=	HL-93-LANE
LVOMT:	Neglect LL for Fill > 8Ft & Fill > Span	=	T

Uniform Dead Load Variable

EDLU:	Extra Uniform Dead Load (Lbs/Ft)	=	0.0
NWEAR:	Thickness of Wearing Surface (in)	=	0.0

Concentrated Dead Load Variables

EDLC1:	Extra Concentrated Dead Load (Lbs)	=	0.0
EDLX1:	Position of Load from CL of Left Wall (Ft)	=	0.0
EDLC2:	Extra Concentrated Dead Load (Lbs)	=	0.0
EDLX2:	Position of Load from CL of Left Wall (Ft)	=	0.0
EDLC3:	Extra Concentrated Dead Load (Lbs)	=	0.0
EDLX3:	Position of Load from CL of Left Wall (Ft)	=	0.0

Soil and Water Pressure Variables

SURCH:	Depth of Surcharge	=	2.0
PRESS:	Maximum Soil Equiv. Fluid Pressure(Pcf)	=	60.0
PMIN:	Minimum Soil Equiv. Fluid Pressure(Pcf)	=	30.0
PWAT:	Internal Water Pressure	=	0.0

Geometry - Box Dimension Variables

NBOX:	Number of Boxes (1 TO 4)	=	1
NSPAN:	Clear Span (Ft)	=	12.0
NHITE:	Clear Height (Ft)	=	9.0
NFILL:	Design Fill Measured from Top of Top Slab(Ft)	=	2.0
LENG:	Section length(PC)-Culvert Length(CIP)(Ft)	=	5.8

Geometry - Slab Thickness Variables

TSLAB:	Thickness of top Slab (In)	=	10.0
BSLAB:	Thickness of Bottom Slab(In)	=	10.0
WALLR:	Thickness of Exterior Wall (In)	=	10.0

Geometry - Skew and Haunch Variables

LSKEW:	Left End Skew Angle(Deg)	=	90.0
RSKEW:	Right End Skew Angle (Deg)	=	90.0
CSKEW:	Culvert Skew Angle (Deg)	=	0.0
TFILT:	Top Haunch (In)	=	9.0
BFILT:	Bottom Haunch (In)	=	9.0
KHACH:	Haunches used in Analysis (YES/NO)	=	YES

Geometry - Clear Concrete Cover

COVS:	Exterior Concrete Cover Top Slab (In)	=	2.0
COVB:	Exterior Concrete Cover Bottom Slab (In)	=	2.0
COVW:	Exterior Concrete Cover Walls (In)	=	2.0
COVIN:	Interior Concrete Cover (In)	=	2.0

Material Properties Variables

EWGT:	Weight of Soil (Pcf)	=	120.0
FYST:	Yield Strength of Reinf. Steel (Psi)	=	60000.0
FSTL:	Allowable Stress of Reinf. Steel(Psi)(ASD)	=	36000.0
FCONC:	Compressive Strength of Concrete (Psi)	=	5000.0
FSHR:	Shear in Concrete (Psi)(ASD)	=	0.0
FSTIR:	Allowable Stress in Stirrups (Psi)(ASD)	=	0.0
CWGT:	Weight of Concrete (Pcf)	=	150.0
AWGT:	Weight of Wearing Surface (Pcf)	=	145.0

ZEE:	Crack Width Parameter from AASHTO	=	98.0
CN:	Modular Ratio of Concrete	=	7.1
CE:	Modulus of Elasticity of Concrete(ksi)	=	4074.3
ZEE:	Crack Width Parameter from AASHTO	=	1.0
CN:	Modular Ratio of Concrete	=	0.9
CE:	Modulus of Elasticity of Concrete(ksi)	=	

Service-I load and resistance factors

EV: Vertical Earth Pressure max-min	1.00	1.00
DC: Components max-min	1.00	1.00
DW: Wearing Surfaces max-min	1.00	1.00
EH: Horizontal Earth Pressure At-Rest	1.00	
LS: Live load surcharge	1.00	
WA: Water load and stream pressure	1.00	
LL: Vehicular live load	1.00	

Strength-I load and resistance factors

EV: Vertical Earth Pressure max-min	1.30	0.90
DC: Components max-min	1.25	0.90
DW: Wearing Surfaces max-min	1.50	0.65
EH: Horizontal Earth Pressure At-Rest	1.35	
LS: Live load surcharge	1.75	
WA: Water load and stream pressure	1.00	
LL: Vehicular live load	1.75	

Strength-II load and resistance factors

EV: Vertical Earth Pressure max-min	1.30	0.90
DC: Components max-min	1.25	0.90
DW: Wearing Surfaces max-min	1.50	0.65
EH: Horizontal Earth Pressure At-Rest	1.35	
LS: Live load surcharge	1.35	
WA: Water load and stream pressure	1.00	
LL: Vehicular live load	1.35	

Fatigue load and resistance factors

EV: Vertical Earth Pressure max-min	0.00	0.00
DC: Components max-min	0.00	0.00
DW: Wearing Surfaces max-min	0.00	0.00
EH: Horizontal Earth Pressure At-Rest	0.00	
LS: Live load surcharge	0.75	
WA: Water load and stream pressure	0.00	
LL: Vehicular live load	0.75	

B1:	Ratio Depth Compressive Zone AASHTO 5.7.2.2	=	0.85
BB:	Factor Load Factor Po and Pb AASHTO	=	0.80
BETAD:	Dead Load Multiplier for Load Factor	=	1.0000
BETAL:	Live Load Multiplier for Load Factor	=	0.0000
PHIMOM:	Phi Factor for Moment	=	1.0000
PHISHR:	Phi Factor for Shear	=	0.9000
GAMMA:	Load Factor Actions Multiplier	=	1.3000

IFATIG:	Check Fatigue	=	F
IHAUCH:	Code for Considering Haunch in Analysis	=	F
ILES5:	Code for Span Less Than 5 ft	=	F
ISHR:	Code for Shear Stress Check	=	F

KBASE:	Bottom Slab Support Code(FULL,FIXED,HINGED)	=	FULL
LDPASS:	Bypass Live Load if no vehicle input	=	F
LONGB:	Longitudinal Bar Code	=	F
MESSGE:	Code for Message Printout	=	T

JOB DESCRIPTION

Title : S.D. IRELAND - BRIDPORT
Structure ID :
Agency name :

Input units : US
Output units : US

ANALYSIS CONTROL

Construction Type	Design/ Review	Moment Continuity Released	Bottom Slab Support Code	Negative Moment Position
PRECAST	DESREV	NO	FULL	0.00

Consider Haunches in Analysis : YES
Perform Edge Beam reinforcement computations : NO
Use epoxy coated bars in top mat of reinforcement: NO
in top slab

Design Method	Limit State Load and Resistance Factors Ductility	Redundant	Operations
LOAD & R	1.0000	1.0000	1.00

OUTPUT CONTROLS

Drawing File: NO
Actions at tenth Points: YES
Bar Schedule: NO
Live Load Influence Ordinates: NO
Live Load Actions Envelope: NO
Default Output: YES
Intermediate Design Iteration Computations: NO
Intermediate Computations NO

MATERIAL PROPERTIES

Concrete f'c (Psi)	Concrete Ec (Psi)	Crack Width Gamma E (Kip/in)	Steel Fy (Psi)	Steel n
5000.	4074280.	0.75	60000.	7.12

Note:
1. The concrete unit weight used for the Ec computation is 5 pcf less than used for load computations

2. The crack width coefficient is the coefficient in Eq. 5.7.3.4-2 for the crack width parameter Z

Unit Weights

Concrete (Pcf)	Soil Fill (Pcf)	Wearing Surface (Pcf)
150.	120.	145.

Note:
1. The soil structure interaction factor has been entered by the user. The value of 1.15 will be used.

BOX GEOMETRY

Culvert Cells	Span Length (Ft)	Clear Height (Ft)	Centerline Length (Ft)
SINGLE	12.00	9.00	5.82

Bridge Width (Ft)	Clear Bridge Width (Ft)	Number of Traffic Lanes
41.00	36.00	3

Slab and Wall Information

Top Slab (In)	Bottom Slab (In)	Exterior Wall (In)	Interior Wall (In)
10.00 Fixed	10.00 Fixed	10.00 Fixed	0.00 n/a

LIVE LOADS

Vehicle Designation
HL-93-TRUCK
HL-93-TANDEM
HL-93-LANE

Live Load Control: YES
(Neglect Live Load if fill is greater than 8 ft.
and fill is greater than culvert span)

Tire application model: patch load
Live Load Surcharge: 2.0 Ft

DEAD LOADS

Concentrated Loads

Wgt. (Kips)	Dis. (Ft)	Wgt. (Kips)	Dis. (Ft)	Wgt. (Kips)	Dis. (Ft)
0.0	0.0	0.0	0.0	0.0	0.0

Soil Pressure Max (Pcf)	Soil Pressure Min (Pcf)	Water Density (Pcf)
60.0	30.0	0.0

Uniform Load (plf)	Wearing Surface Thickness (in)	Fill Height (Ft)
0.0	0.00	1.99

SKEW

Skew Left (Deg)	Skew Right (Deg)	Skew Center (Deg)
90.0	90.0	0.0

HAUNCHES

Top Haunch Height (In)	Bottom Haunch Height (In)
9.0	9.0

CONCRETE COVER to face of bar

Top Slab (In)	Bottom Slab (In)	Exterior Wall (In)	Interior Wall (In)
2.00	2.00	2.00	2.00

Bar sizes and spacings with computed areas of steel

```
Areas of steel are in in2/ft

                                Top slab
LEFT SIDE                        CENTER                          RIGHT SIDE
area  0.6200 in2                 area  0.7440 in2                area  0.6200 in2
size  5 spaced at   6.00 in.     size  5 spaced at   5.00 in.    size  5 spaced at   6.00 in.
*****************************************************************************

 Exterior wall
TOP
area  0.6200 in2
size  5 spaced at   6.00 in.


OUTSIDE FACE
area  0.6200 in2
size  5 spaced at   6.00 in.

INSIDE FACE
area  0.2667 in2
size  4 spaced at   9.00 in.


BOTTOM
area  0.6200 in2
size  5 spaced at   6.00 in.
*****************************************************************************

                               Bottom slab
LEFT SIDE                        CENTER                          RIGHT SIDE
area  0.6200 in2                 area  0.6200 in2                area  0.6200 in2
size  5 spaced at   6.00 in.     size  5 spaced at   6.00 in.    size  5 spaced at   6.00 in.

EXTERIOR WALL Minimum Thickness Based on Cover and Layer Clearance
AASHTO LRFD Section 5.10.3.1 (minimum thickness)
Equation 2 = exterior wall cover plus the diameter of two #6 bars and
two #4 bars plus  the inside wall/slab cover plus 1 in clearance

Required Thickness is   8.00 Inches
```

LRFD Live Load Distribution Factor Computation

Input Values

Depth of Fill	= 1.99	ft.
Span Length	= 12.00	ft.
Truck Gage	= 6.00	ft.
Soil Distribution Factor	= 1.15	
Tire Patch Width	= 20.00	in.
Bridge Width	= 41.00	ft.
Lay Length	= 5.82	ft.

Compute Strip Width by 4.6.2.10.2-1

E = 96 + 1.44 S ft
E = 96 + 1.44 (12.00 ft.)
E = 9.44 ft.

Controlling Distribution Factor

Final Strip Width = 9.44 ft.

Final Distribution Factor = 1/Final Strip Width = **0.106** Lanes per ft. of width

Multiple Presence Factor = 1.20

Distribution Factor * Multiple Presence Factor = **0.127**

Notes:

1. Only the one lane loaded case is considered. The one lane loaded multiple presence factor is used. See 12.11.2.1, 3.6.1.3.3, and 4.6.2.10.
2. Lane loads are not applied. See 3.6.1.3.3. This applies to all approximate strip methods.
3. The distribution factor for fills of 2 feet or greater is bounded by the distribution factor computed in 4.6.2.10. See 3.6.1.2.6.

Number of cells	=	1	
Top Slab thickness	=	10.0000	In.
Bottom Slab thickness	=	10.0000	In.
Exterior Wall thickness	=	10.0000	In.
Design Span(c-c walls)	=	12.8333	Ft.
Design Height(c-c slabs)	=	9.8333	Ft.
Fill Height(top of slab)	=	1.9900	Ft.
Wearing surface thickness	=	0.0000	In.
Loads based on 1 foot unit width			
Soil Structure Interaction Factor	=	1.1500	
Earth Weight for fill computations	=	0.1380	Kcf ← 140 pcf
Weight of Fill without wearing surface	=	0.2746	Klf
Weight of Wearing Surface	=	0.0000	Klf
Weight of Top Slab	=	0.1250	Klf
Weight of Extra Uniform Dead Load	=	0.0000	Klf
Uniform Dead Load on Top Slab	=	0.3996	Klf
Weight of Walls divided by culvert width	=	0.1646	Klf
Uniform Dead Load on Bottom Slab	=	0.5643	Klf
Soil pressure at center of top slab	=	0.1444	Klf
Soil pressure at center of bottom slab	=	0.7344	Klf ←
Soil pressure due to live load surcharge	=	0.0820	Klf
Impact Factor on Top Slab & Walls	=	0.2479	
Impact Factor on Bottom Slab	=	0.0000	
Axle Load Distribution Factor on:			
Top Slab & Walls	=	0.0000	
on Bottom Slab	=	0.0000	

Note:

1. The weight of the walls is computed by taking the interior wall thickness plus twice the exterior wall thickness and multiplying by the clear height of the culvert and the weight of concrete. That result is divided by the span length times the number of cells plus the wall thicknesses.

2. The soil pressure computations use the fill height and the culvert height for appropriate values for lateral earth pressures. Wearing surface, fill height, and slab thickness are used in vertical dead load computations.

3. The distribution width and associated distribution factor for the top slab is computed according to AASHTO LRFD 4.6.2.10 for fill depth less than 2 ft. and AASHTO LRFD 3.6.1.2.6 for fill depths over 2 ft. Also, see 3.6.1.3.3.

For a HL-93-TRUCK Vehicle
Description AASHTO LRFD HL-93 Design Truck (US)
The Number of axles = 3

Axle Weights (kips)	Spacing (ft)
8.00	14.000

	32.00	14.000
	32.00	0.000
	---	---
Totals	72.00	28.000

For a HL-93-TRUCK Vehicle
Description AASHTO LRFD HL-93 Design Truck (US)

The number of simulated axles based on fill = 3

The number of simulated axles is calculated based on the longitudinal distribution length of each axle divided by the simulated axle spacing of 1 foot and the simulated axle weights are calculated by dividing the vehicle axle weights by the number of simulated axles per vehicle axle.

	Truck facing backwards		Truck facing forward	
	Axle wts. (kips)	Spacing (ft)	Axle wts. (kips)	Spacing (ft)
	8.00	0.000	32.00	0.000
	32.00	14.000	32.00	14.000
	32.00	14.000	8.00	14.000
	---	---	---	---
Totals	72.00	28.000	72.00	28.000

Note: Impact or distribution is not included in the above table.

Current Live Load: HL-93-TRUCK

Unfactored MOMENTS (per unit design width)
due to Dead and Live Loads including Distribution and Impact

M-PT	Dead Load Kft	Soil Press (Max) Kft	Soil Press (Min) Kft	Surch Hgt. Kft	Water Press (Max) Kft	LIVE LOADS Pos Kft	Neg Kft
EXTERIOR WALL BOTTOM							
1- 0	-4.64	-1.62	-0.81	-0.29	0.00	0.00	-3.68
1- 1	-4.46	0.65	0.33	0.07	0.00	0.00	-3.32
1- 2	-4.28	2.27	1.14	0.35	0.00	0.00	-3.21
1- 3	-4.10	3.29	1.65	0.55	0.00	0.00	-3.43
1- 4	-3.92	3.77	1.89	0.67	0.00	0.00	-3.71
1- 5	-3.74	3.77	1.89	0.70	0.00	0.00	-3.98
1- 6	-3.57	3.35	1.68	0.67	0.00	0.00	-4.26
1- 7	-3.39	2.56	1.28	0.55	0.00	0.00	-4.53
1- 8	-3.21	1.46	0.73	0.35	0.00	0.00	-4.81
1- 9	-3.03	0.10	0.05	0.07	0.00	0.22	-5.09
1-10	-2.85	-1.45	-0.73	-0.29	0.00	0.66	-5.36
EXTERIOR WALL TOP							
TOP SLAB LEFT SIDE							
2- 0	-2.85	-1.45	-0.73	-0.29	0.00	0.66	-5.36
2- 1	0.11	-1.45	-0.73	-0.29	0.00	3.66	-1.66
2- 2	2.42	-1.45	-0.72	-0.29	0.00	6.64	0.00
2- 3	4.06	-1.45	-0.72	-0.29	0.00	9.12	0.00
2- 4	5.05	-1.45	-0.72	-0.29	0.00	10.76	0.00
2- 5	5.38	-1.44	-0.72	-0.29	0.00	11.31	0.00
2- 6	5.05	-1.44	-0.72	-0.29	0.00	10.75	0.00
2- 7	4.07	-1.44	-0.72	-0.29	0.00	9.14	0.00
2- 8	2.42	-1.44	-0.72	-0.29	0.00	6.65	0.00
2- 9	0.12	-1.44	-0.72	-0.29	0.00	3.66	-1.67
2-10	-2.84	-1.43	-0.72	-0.29	0.00	0.67	-5.37

TOP SLAB RIGHT SIDE

BOTTOM SLAB LEFT SIDE

4- 0	-4.64	-1.62	-0.81	-0.29	0.00	0.00	-3.68
4- 1	-0.46	-1.62	-0.81	-0.29	0.00	0.31	-0.74
4- 2	2.79	-1.62	-0.81	-0.29	0.00	2.53	0.00
4- 3	5.12	-1.62	-0.81	-0.29	0.00	4.12	0.00
4- 4	6.51	-1.63	-0.81	-0.29	0.00	5.06	0.00
4- 5	6.97	-1.63	-0.81	-0.29	0.00	5.38	0.00
4- 6	6.51	-1.63	-0.82	-0.29	0.00	5.07	0.00
4- 7	5.11	-1.63	-0.82	-0.29	0.00	4.12	0.00
4- 8	2.79	-1.63	-0.82	-0.29	0.00	2.54	0.00
4- 9	-0.46	-1.64	-0.82	-0.29	0.00	0.32	-0.77
4-10	-4.65	-1.64	-0.82	-0.29	0.00	0.00	-3.71

BOTTOM SLAB RIGHT SIDE

Current Live Load: HL-93-TRUCK

Unfactored SHEARS (per unit design width)
due to Dead and Live Loads including Distribution and Impact

M-PT	Dead Load K	Soil Press (Max) K	Soil Press (Min) K	Surch Hgt. K	Water Press (Max) K	LIVE LOADS Pos K	Neg K
EXTERIOR WALL BOTTOM							
1- 0	0.18	2.66	1.33	0.40	0.00	0.43	-0.28
1- 1	0.18	1.97	0.98	0.32	0.00	0.43	-0.28
1- 2	0.18	1.33	0.67	0.24	0.00	0.43	-0.28
1- 3	0.18	0.76	0.38	0.16	0.00	0.43	-0.28
1- 4	0.18	0.24	0.12	0.08	0.00	0.43	-0.28
1- 5	0.18	-0.23	-0.11	0.00	0.00	0.43	-0.28
1- 6	0.18	-0.63	-0.31	-0.08	0.00	0.43	-0.28
1- 7	0.18	-0.97	-0.49	-0.16	0.00	0.43	-0.28
1- 8	0.18	-1.26	-0.63	-0.24	0.00	0.43	-0.28
1- 9	0.18	-1.49	-0.74	-0.32	0.00	0.43	-0.28
1-10	0.18	-1.66	-0.83	-0.40	0.00	0.43	-0.28
EXTERIOR WALL TOP							
TOP SLAB LEFT SIDE							
2- 0	2.56	0.00	0.00	0.00	0.00	5.05	0.00
2- 1	2.05	0.00	0.00	0.00	0.00	4.47	-0.35
2- 2	1.54	0.00	0.00	0.00	0.00	3.97	-0.80
2- 3	1.03	0.00	0.00	0.00	0.00	3.40	-1.33
2- 4	0.51	0.00	0.00	0.00	0.00	2.80	-1.92
2- 5	0.00	0.00	0.00	0.00	0.00	2.19	-2.53
2- 6	-0.51	0.00	0.00	0.00	0.00	1.58	-3.14
2- 7	-1.03	0.00	0.00	0.00	0.00	1.03	-3.73
2- 8	-1.54	0.00	0.00	0.00	0.00	0.54	-4.26
2- 9	-2.05	0.00	0.00	0.00	0.00	0.17	-4.71
2-10	-2.56	0.00	0.00	0.00	0.00	0.00	-5.06
TOP SLAB RIGHT SIDE							
BOTTOM SLAB LEFT SIDE							
4- 0	3.62	0.00	0.00	0.00	0.00	2.60	0.00
4- 1	2.90	0.00	0.00	0.00	0.00	2.09	0.00
4- 2	2.17	0.00	0.00	0.00	0.00	1.58	0.00
4- 3	1.45	0.00	0.00	0.00	0.00	1.08	0.00
4- 4	0.72	0.00	0.00	0.00	0.00	0.57	0.00
4- 5	0.00	0.00	0.00	0.00	0.00	0.06	-0.06
4- 6	-0.72	0.00	0.00	0.00	0.00	0.00	-0.57
4- 7	-1.45	0.00	0.00	0.00	0.00	0.00	-1.08
4- 8	-2.17	0.00	0.00	0.00	0.00	0.00	-1.58
4- 9	-2.90	0.00	0.00	0.00	0.00	0.00	-2.09
4-10	-3.62	0.00	0.00	0.00	0.00	0.00	-2.60
BOTTOM SLAB RIGHT SIDE							

Current Live Load: HL-93-TRUCK

Unfactored AXIAL FORCES (per unit design width)
due to Dead and Live Loads including Distribution and Impact

M-PT	Dead Load K	Soil Press (Max) K	Soil Press (Min) K	Surch Hgt. K	Water Press (Max) K	LIVE LOADS Pos K	Neg K
EXTERIOR WALL BOTTOM							
1- 0	-2.56	0.00	0.00	0.00	0.00	0.00	-4.97
1- 1	-2.56	0.00	0.00	0.00	0.00	0.00	-4.97
1- 2	-2.56	0.00	0.00	0.00	0.00	0.00	-4.97
1- 3	-2.56	0.00	0.00	0.00	0.00	0.00	-4.97
1- 4	-2.56	0.00	0.00	0.00	0.00	0.00	-4.97
1- 5	-2.56	0.00	0.00	0.00	0.00	0.00	-4.97
1- 6	-2.56	0.00	0.00	0.00	0.00	0.00	-4.97
1- 7	-2.56	0.00	0.00	0.00	0.00	0.00	-4.97
1- 8	-2.56	0.00	0.00	0.00	0.00	0.00	-4.97
1- 9	-2.56	0.00	0.00	0.00	0.00	0.00	-4.97
1-10	-2.56	0.00	0.00	0.00	0.00	0.00	-4.97
EXTERIOR WALL TOP							
TOP SLAB LEFT SIDE							
2- 0	0.18	-1.66	-0.83	-0.40	0.00	0.42	-0.28
2- 1	0.18	-1.66	-0.83	-0.40	0.00	0.42	-0.28
2- 2	0.18	-1.66	-0.83	-0.40	0.00	0.42	-0.28
2- 3	0.18	-1.66	-0.83	-0.40	0.00	0.42	-0.28
2- 4	0.18	-1.66	-0.83	-0.40	0.00	0.42	-0.28
2- 5	0.18	-1.66	-0.83	-0.40	0.00	0.42	-0.28
2- 6	0.18	-1.66	-0.83	-0.40	0.00	0.42	-0.28
2- 7	0.18	-1.66	-0.83	-0.40	0.00	0.42	-0.28
2- 8	0.18	-1.66	-0.83	-0.40	0.00	0.42	-0.28
2- 9	0.18	-1.66	-0.83	-0.40	0.00	0.42	-0.28
2-10	0.18	-1.66	-0.83	-0.40	0.00	0.42	-0.28
TOP SLAB RIGHT SIDE							
BOTTOM SLAB LEFT SIDE							
4- 0	-0.18	-2.66	-1.33	-0.40	0.00	0.28	-0.42
4- 1	-0.18	-2.66	-1.33	-0.40	0.00	0.28	-0.42
4- 2	-0.18	-2.66	-1.33	-0.40	0.00	0.28	-0.42
4- 3	-0.18	-2.66	-1.33	-0.40	0.00	0.28	-0.42
4- 4	-0.18	-2.66	-1.33	-0.40	0.00	0.28	-0.42
4- 5	-0.18	-2.66	-1.33	-0.40	0.00	0.28	-0.42
4- 6	-0.18	-2.66	-1.33	-0.40	0.00	0.28	-0.42
4- 7	-0.18	-2.66	-1.33	-0.40	0.00	0.28	-0.42
4- 8	-0.18	-2.66	-1.33	-0.40	0.00	0.28	-0.42
4- 9	-0.18	-2.66	-1.33	-0.40	0.00	0.28	-0.42
4-10	-0.18	-2.66	-1.33	-0.40	0.00	0.28	-0.42
BOTTOM SLAB RIGHT SIDE							

Factors for Ductility 1.00
Redundancy 1.00
Operations 1.00

Fatigue Checks

$f_s <= f_f = 24 - 0.33 f_{min}$ (5.5.3.2-1)

where:

f_s = actual stress range in the reinforcement

f_f = maximum allowable stress range

Member	Location	f_{min} (kip)	f_f (kip)	f_s (kip)	Result
EXTERIOR WALL	Top	-104.297	24034.42	11903.27	Pass
TOP SLAB	Left	-1038.682	23657.23	4000.04	Pass
TOP SLAB	Middle -	-1038.682	23657.23	4017.35	Pass
BOTTOM SLAB	Left	-1038.682	23657.23	1172.65	Pass
BOTTOM SLAB	Middle -	-1038.682	23657.23	1203.28	Pass

LRFD Crack Control Computation

Current Vehicle: AASHTO LRFD HL-93 Design Truck (US)

Location	γ_e	h (in.)	d_c (in.)	β_s	Max Spacing ()	Current Spacing (in.)	Allowable Stress ()	Actual Stress (kip)
Top slab, outside corner	$0.8*f_r > f_c$, therefore no check necessary.							
Top slab, inside face	0.75000000	10.00000000	2.00000000	1.35714281	7.27288294	5.00000000	42.98246384	34.31616592
Top slab, outside face	$0.8*f_r > f_c$, therefore no check necessary.							
Bottom slab, outside corner	$0.8*f_r > f_c$, therefore no check necessary.							
Bottom slab, inside face	0.75000000	10.00000000	2.00000000	1.35714281	9.05658627	6.00000000	38.68421173	29.62812042
Bottom slab, outside face	$0.8*f_r > f_c$, therefore no check necessary.							
Ext. wall, outside face	$0.8*f_r > f_c$, therefore no check necessary.							
Ext. wall, inside face	$0.8*f_r > f_c$, therefore no check necessary.							

```
Lateral Distribution Steel:
  Span Length                              =   12.833 feet
  Percentage of main reinforcement required =  27.915% , less than or equal to 50%
  Main reinforcement area (top slab)       =    0.744 in^2
  Required lateral distribution area       =    0.208 in^2
  Main reinforcement area (bottom slab)    =    0.620 in^2
  Required lateral distribution area       =    0.173 in^2
  Because the required area is less than the minimum, an area of steel of   0.200 in^2 is used.


 Bar sizes and spacings with computed areas of steel

 Areas of steel are in in2/ft

                              Top slab
LEFT SIDE                      CENTER                          RIGHT SIDE
area  0.6200 in2               area  0.7440 in2                area  0.6200 in2
size  5 spaced at   6.00 in.   size  5 spaced at   5.00 in.   size  5 spaced at   6.00 in.
*****************************************************************************

 Exterior wall
TOP
area  0.6200 in2
size  5 spaced at   6.00 in.


OUTSIDE FACE
area  0.6200 in2
size  5 spaced at   6.00 in.

INSIDE FACE
area  0.2667 in2
size  4 spaced at   9.00 in.


BOTTOM
area  0.6200 in2
size  5 spaced at   6.00 in.
*****************************************************************************

                              Bottom slab
LEFT SIDE                      CENTER                          RIGHT SIDE
area  0.6200 in2               area  0.6200 in2                area  0.6200 in2
size  5 spaced at   6.00 in.   size  5 spaced at   6.00 in.   size  5 spaced at   6.00 in.
```

Serviceability, Fatigue, and Other Checks

Based on crack control check
AASHTO 5.7.3.4 LRFD

Slenderness check on walls passed
Eccentricity check on walls passed

Reinforcing Bar Stresses Sizes and Spacing

Note: Bar stresses are based on bending and axial stress only
Stresses are in ksi
Area of steel in square inches per ft
Spacing and H and V legs are in inches

Bar Mark	Description
A1	Top Corner Outside face Max Neg Moment
A100	Top Slab Inside face Max Pos Moment
A300	Top Slab Outside face Max Neg Moment Interior support
A2	Bottom Corner Outside face Max Neg Moment
A200	Bottom Slab Inside face Max Pos Moment
A400	Bottom Slab Outside face Max Neg Moment Interior support
B2	Exterior Wall Outside face Max Neg Moment
B1	Exterior Wall Inside face Max Pos Moment
B3	Interior Wall Both faces

Bar Type	Fs Act. (Ksi)	Fs All. (Ksi)	Area steel Input (In2)	Area steel Provided (In2)	Size US Bars	Spacing (In)	H (In)
A1	10.00	0.00	0.6200	0.6200	5	6.0	75
A2	9.65	34.32	0.6200	0.6200	5	6.0	36
A100	34.32	42.98	0.7440	0.7440	5	5.0	
A200	29.63	38.68	0.6200	0.6200	5	6.0	
B1	4.31	29.63	0.2667	0.2667	4	9.0	
B2	15.00	29.63	0.6200	0.6200	5	6.0	

Notes:

1. Area of steel is the maximum required for all limit states. The strength computations are shown in the results at critical sections table.

2. Design thickness shown in the following table is based on the appropriate cover minus half the diameter of the bar in the above table or one-half the diameter of a #6 bar. The actual half bar diameter is used once the steel has been selected and the #6 bar is used in design iterations.

3. For a Design review run the actual bar stresses shown can be the stress at either side of a member corner or the stress at the middle of the slab for a multiple cell group. The required As is actual in a Design review.

4. If the user wishes to ignore crack control the allowable steel stress is set at 0.95 Fy. This limit will likely not control the design, but it if should, this will control yielding under service loads.

Output at Critical Sections (per unit design width)

Member No. = 1 EXTERIOR WALL

Thickness = 10.00 (in)
Clear cover at end = 2.00 (in)
Clear cover at middle = 2.00 (in)
Bar diameter (bot) = 0.62 (in)
Bar diameter (mid+) = 0.50 (in)
Bar diameter (mid-) = 0.62 (in)
Bar diameter (top) = 0.62 (in)

	Moment Kft	Coin. Axial Force Kips	Shear Force Kips	Shear Cap Kips	Resistance Po Cap Kips	Mu Cap Kft	Mbal Cap Kft	Pbal Cap Kips	Steel Area In2	Mom. Cap Kft	Des. Thk in	Design Ratio
BOT	-8.9	11.0	4.0	23.1	380.5	22.7	46.0	118.7	0.6200	23.0	7.69	n/a
MID	3.9	11.0	0.7	33.0	368.8	10.1	42.4	136.9	0.2667	10.3	7.75	0.4
MID-	-7.0	11.0	0.7	28.0	380.5	22.7	46.0	118.7	0.6200	23.0	7.69	n/a
TOP	-11.3	11.0	2.9	21.5	380.5	22.7	46.0	118.7	0.6200	23.0	7.69	n/a

Member No. = 2 TOP SLAB

Thickness = 10.00 (in)
Clear cover at end = 2.00 (in)
Clear cover at middle = 2.00 (in)
Bar diameter (lt) = 0.62 (in)
Bar diameter (mid) = 0.62 (in)
Bar diameter (rt) = 0.62 (in)

LT	-6.1	3.3	9.9	20.0	380.5	22.7	46.0	118.7	0.6200	22.8	7.69	n/a
MID	22.7	3.3	3.8	14.6	384.6	27.0	47.4	112.8	0.7440	27.0	7.69	0.8
RT	-6.1	3.3	9.9	13.2	380.5	22.7	46.0	118.7	0.6200	22.8	7.69	n/a

Member No. = 4 BOTTOM SLAB

Thickness = 10.00 (in)
Clear cover at end = 2.00 (in)
Clear cover at middle = 2.00 (in)
Bar diameter (lt) = 0.62 (in)
Bar diameter (mid) = 0.62 (in)
Bar diameter (rt) = 0.62 (in)

LT	-5.2	5.2	6.5	23.2	380.5	22.7	46.0	118.7	0.6200	22.8	7.69	n/a
MID	13.6	5.2	0.1	19.4	380.5	22.7	46.0	118.7	0.6200	22.8	7.69	0.6
RT	-5.3	5.2	6.5	16.7	380.5	22.7	46.0	118.7	0.6200	22.8	7.69	n/a

Warnings:

1. For exterior corners, BRASS-CULVERT does not perform a check on both the exterior wall and top or bottom slab. BRASS-CULVERT only checks the location that it has determined requires a greater area of steel. Because of this, BRASS-CULVERT may check one location for a particular culvert (e.g. top of the wall) and a different location (e.g. left end of top slab) for the same culvert with a different depth of fill.

2. If the flexural resistance is zero and rebar has been entered, it could be due to the axial load being higher than the tensile capacity of the rebar provide. For example, the axial load is greater than the area of steel times the yield strength of the bars.

Notes:

1. Flexure rating value of n/a indicates no live load effect on the member

2. SS value adjacent to steel area indicates a simply supported culvert and a steel area is not required

3. AASHTO LRFD Sec. 5.7.4 with 94-99 Interims
   Po -- Axial capacity at zero eccentricity (no moment)
   Mu -- Flexural Capacity without an axial load
   Pbal -- Axial load at balanced strain
   Mbal -- Moment at balanced state of strain

4. Coin. is the coincident axial force

5. The plane of computation for shear is a "d" distance from the face of the supporting member

6. The plane of computation for moment if haunches are used is based on AASHTO 8.8.2

7. The plane of computation for moment if haunches are not used is based on the user input

8. An asterisk next to the Design Moment indicates the Moment is greater than the All Mom. Value

9. An asterisk next to the Shear Value indicates the Shear is greater than the Allowable Shear

10. Rating factors computations consider the effect of axial force. The Allowable Moment value is used with the maximum soil pressure.

11. The load combinations and envelope of critical action combinations are shown in the C:\BRASS\CULVERT\Examples\SD Ireland - Bridport 5 - Revised 3-24-15.ooo file.

12. For fills less than 2.0 feet, Article 5.14.4.1 applies, and shear is assumed to adequate because the section has been designed for moment.

Factored Actions for Load and Resistance Factor Design at Tenth Points (per unit design width)

M-Pt	+Moment (Kft)	-Moment (Kft)	+A.F. (Kips)	-A.F. (Kips)	+Shear (Kips)	-Shear (Kips)
EXTERIOR WALL BOTTOM						
1- 0	-5.142	-13.344	-1.637	-11.027	5.215	2.013
1- 1	-1.839	-9.288	-1.637	-11.026	4.138	1.389
1- 2	0.944	-7.467	-1.637	-11.026	3.140	0.818
1- 3	2.784	-6.777	-1.637	-11.026	2.220	0.298
1- 4	3.758	-6.659	-1.637	-11.026	1.378	-0.169
1- 5	3.942	-6.978	-1.637	-11.026	0.715	-0.685
1- 6	3.414	-7.680	-1.637	-11.026	0.353	-1.370
1- 7	2.251	-8.713	-1.637	-11.026	0.042	-1.977
1- 8	0.529	-10.025	-1.637	-11.026	-0.216	-2.506
1- 9	-1.286	-11.566	-1.637	-11.026	-0.422	-2.956
1-10	-2.629	-14.446	-1.637	-11.027	-0.576	-3.328
EXTERIOR WALL TOP						
TOP SLAB LEFT SIDE						
2- 0	-2.629	-14.446	-1.384	-3.276	11.167	1.636
2- 1	4.546	-5.295	-1.334	-3.326	9.689	0.693
2- 2	11.854	-0.919	-1.334	-3.326	8.347	-0.417
2- 3	17.706	0.000	-1.334	-3.326	6.888	-1.677
2- 4	21.465	0.000	-1.334	-3.326	5.364	-3.030
2- 5	22.731	0.000	-1.334	-3.326	3.827	-4.421
2- 6	21.470	0.000	-1.334	-3.326	2.449	-5.960
2- 7	17.754	0.000	-1.334	-3.326	1.145	-7.454
2- 8	11.907	-0.900	-1.334	-3.326	-0.035	-8.849
2- 9	4.582	-5.283	-1.334	-3.326	-1.013	-10.112
2-10	-2.576	-14.428	-1.384	-3.276	-1.632	-11.192
TOP SLAB RIGHT SIDE						
BOTTOM SLAB LEFT SIDE						
4- 0	-5.142	-13.344	-3.213	-5.205	7.842	2.305
4- 1	-1.939	-4.409	-3.213	-5.205	6.295	1.844
4- 2	4.782	-0.911	-3.263	-5.155	4.748	1.382
4- 3	9.667	0.000	-3.263	-5.155	3.201	0.921
4- 4	12.588	0.000	-3.263	-5.155	1.654	0.459
4- 5	13.560	0.000	-3.263	-5.155	0.107	-0.111
4- 6	12.586	0.000	-3.263	-5.155	-0.463	-1.658
4- 7	9.661	0.000	-3.263	-5.155	-0.925	-3.205
4- 8	4.774	-0.930	-3.263	-5.155	-1.386	-4.752
4- 9	-1.952	-4.484	-3.213	-5.205	-1.848	-6.299
4-10	-5.173	-13.428	-3.213	-5.205	-2.310	-7.846
BOTTOM SLAB RIGHT SIDE						

Output complete for a HL-93-TRUCK vehicle

LRFD Live Load Distribution Factor Computation

Input Values

Depth of Fill	= 1.99	ft.
Span Length	= 12.00	ft.
Truck Gage	= 6.00	ft.
Soil Distribution Factor	= 1.15	
Tire Patch Width	= 20.00	in.
Bridge Width	= 41.00	ft.
Lay Length	= 5.82	ft.

Compute Strip Width by 4.6.2.10.2-1

E = 96 + 1.44 S ft
E = 96 + 1.44 (12.00 ft.)
E = 9.44 ft.

Controlling Distribution Factor

Final Strip Width = 9.44 ft.

Final Distribution Factor = 1/Final Strip Width = **0.106** Lanes per ft. of width

Multiple Presence Factor = 1.20

Distribution Factor * Multiple Presence Factor = **0.127**

Notes:

1. Only the one lane loaded case is considered. The one lane loaded multiple presence factor is used. See 12.11.2.1, 3.6.1.3.3, and 4.6.2.10.
2. Lane loads are not applied. See 3.6.1.3.3. This applies to all approximate strip methods.
3. The distribution factor for fills of 2 feet or greater is bounded by the distribution factor computed in 4.6.2.10. See 3.6.1.2.6.

```
For a HL-93-TANDEM              Vehicle
Description AASHTO LRFD HL-93 Design Tandem (US)
The Number of axles =    2

   Axle Weights      Spacing
         (kips)        (ft)

         25.00        4.000
         25.00        0.000

        ------       ------
Totals   50.00        4.000
```

```
For a HL-93-TANDEM Vehicle
Description AASHTO LRFD HL-93 Design Tandem (US)

The number of simulated axles based on fill =    2

The number of simulated axles is calculated based
on the longitudinal distribution length of each axle
divided by the simulated axle spacing of 1 foot
and the simulated axle weights are calculated by
dividing the vehicle axle weights by the number of
simulated axles per vehicle axle.


    Truck facing backwards      Truck facing forward
```

	Axle wts. (kips)	Spacing (ft)	Axle wts. (kips)	Spacing (ft)
	25.00	0.000	25.00	0.000
	25.00	4.000	25.00	4.000
Totals	50.00	4.000	50.00	4.000

Note: Impact or distribution is not included in the above table.

Current Live Load: HL-93-TANDEM

Unfactored MOMENTS (per unit design width)
due to Dead and Live Loads including Distribution and Impact

M-PT	Dead Load Kft	Soil Press (Max) Kft	Soil Press (Min) Kft	Surch Hgt. Kft	Water Press (Max) Kft	LIVE LOADS Pos Kft	Neg Kft
EXTERIOR WALL BOTTOM							
1- 0	-4.64	-1.62	-0.81	-0.29	0.00	0.00	-5.39
1- 1	-4.46	0.65	0.33	0.07	0.00	0.00	-5.05
1- 2	-4.28	2.27	1.14	0.35	0.00	0.00	-4.95
1- 3	-4.10	3.29	1.65	0.55	0.00	0.00	-5.19
1- 4	-3.92	3.77	1.89	0.67	0.00	0.00	-5.47
1- 5	-3.74	3.77	1.89	0.70	0.00	0.00	-5.76
1- 6	-3.57	3.35	1.68	0.67	0.00	0.00	-6.04
1- 7	-3.39	2.56	1.28	0.55	0.00	0.00	-6.33
1- 8	-3.21	1.46	0.73	0.35	0.00	0.00	-6.62
1- 9	-3.03	0.10	0.05	0.07	0.00	0.11	-6.90
1-10	-2.85	-1.45	-0.73	-0.29	0.00	0.44	-7.19
EXTERIOR WALL TOP							
TOP SLAB LEFT SIDE							
2- 0	-2.85	-1.45	-0.73	-0.29	0.00	0.44	-7.19
2- 1	0.11	-1.45	-0.73	-0.29	0.00	2.86	-1.87
2- 2	2.42	-1.45	-0.72	-0.29	0.00	6.12	0.00
2- 3	4.06	-1.45	-0.72	-0.29	0.00	9.45	0.00
2- 4	5.05	-1.45	-0.72	-0.29	0.00	11.24	0.00
2- 5	5.38	-1.44	-0.72	-0.29	0.00	11.45	0.00
2- 6	5.05	-1.44	-0.72	-0.29	0.00	11.38	0.00
2- 7	4.07	-1.44	-0.72	-0.29	0.00	9.67	0.00
2- 8	2.42	-1.44	-0.72	-0.29	0.00	6.36	0.00
2- 9	0.12	-1.44	-0.72	-0.29	0.00	2.61	-1.88
2-10	-2.84	-1.43	-0.72	-0.29	0.00	0.53	-7.22
TOP SLAB RIGHT SIDE							
BOTTOM SLAB LEFT SIDE							
4- 0	-4.64	-1.62	-0.81	-0.29	0.00	0.00	-5.39
4- 1	-0.46	-1.62	-0.81	-0.29	0.00	0.23	-0.76
4- 2	2.79	-1.62	-0.81	-0.29	0.00	3.75	0.00
4- 3	5.12	-1.62	-0.81	-0.29	0.00	6.26	0.00
4- 4	6.51	-1.63	-0.81	-0.29	0.00	7.76	0.00
4- 5	6.97	-1.63	-0.81	-0.29	0.00	8.26	0.00
4- 6	6.51	-1.63	-0.82	-0.29	0.00	7.76	0.00
4- 7	5.11	-1.63	-0.82	-0.29	0.00	6.26	0.00
4- 8	2.79	-1.63	-0.82	-0.29	0.00	3.76	0.00
4- 9	-0.46	-1.64	-0.82	-0.29	0.00	0.24	-0.75
4-10	-4.65	-1.64	-0.82	-0.29	0.00	0.00	-5.38
BOTTOM SLAB RIGHT SIDE							

Current Live Load: HL-93-TANDEM

Unfactored SHEARS (per unit design width)
due to Dead and Live Loads including Distribution and Impact

M-PT	Dead Load	Soil Press (Max)	Soil Press (Min)	Surch Hgt.	Water Press (Max)	LIVE LOADS Pos	Neg

	K	K	K	K	K	K	K
EXTERIOR WALL BOTTOM							
1- 0	0.18	2.66	1.33	0.40	0.00	0.35	-0.29
1- 1	0.18	1.97	0.98	0.32	0.00	0.35	-0.29
1- 2	0.18	1.33	0.67	0.24	0.00	0.35	-0.29
1- 3	0.18	0.76	0.38	0.16	0.00	0.35	-0.29
1- 4	0.18	0.24	0.12	0.08	0.00	0.35	-0.29
1- 5	0.18	-0.23	-0.11	0.00	0.00	0.35	-0.29
1- 6	0.18	-0.63	-0.31	-0.08	0.00	0.35	-0.29
1- 7	0.18	-0.97	-0.49	-0.16	0.00	0.35	-0.29
1- 8	0.18	-1.26	-0.63	-0.24	0.00	0.35	-0.29
1- 9	0.18	-1.49	-0.74	-0.32	0.00	0.35	-0.29
1-10	0.18	-1.66	-0.83	-0.40	0.00	0.35	-0.29
EXTERIOR WALL TOP							
TOP SLAB LEFT SIDE							
2- 0	2.56	0.00	0.00	0.00	0.00	6.74	0.00
2- 1	2.05	0.00	0.00	0.00	0.00	5.59	-0.28
2- 2	1.54	0.00	0.00	0.00	0.00	4.71	-0.63
2- 3	1.03	0.00	0.00	0.00	0.00	3.80	-1.04
2- 4	0.51	0.00	0.00	0.00	0.00	2.90	-1.74
2- 5	0.00	0.00	0.00	0.00	0.00	2.05	-2.56
2- 6	-0.51	0.00	0.00	0.00	0.00	1.37	-3.44
2- 7	-1.03	0.00	0.00	0.00	0.00	0.83	-4.36
2- 8	-1.54	0.00	0.00	0.00	0.00	0.45	-5.25
2- 9	-2.05	0.00	0.00	0.00	0.00	0.13	-6.08
2-10	-2.56	0.00	0.00	0.00	0.00	0.00	-6.82
TOP SLAB RIGHT SIDE							
BOTTOM SLAB LEFT SIDE							
4- 0	3.62	0.00	0.00	0.00	0.00	4.02	0.00
4- 1	2.90	0.00	0.00	0.00	0.00	3.23	0.00
4- 2	2.17	0.00	0.00	0.00	0.00	2.44	0.00
4- 3	1.45	0.00	0.00	0.00	0.00	1.64	0.00
4- 4	0.72	0.00	0.00	0.00	0.00	0.85	0.00
4- 5	0.00	0.00	0.00	0.00	0.00	0.06	-0.06
4- 6	-0.72	0.00	0.00	0.00	0.00	0.00	-0.85
4- 7	-1.45	0.00	0.00	0.00	0.00	0.00	-1.64
4- 8	-2.17	0.00	0.00	0.00	0.00	0.00	-2.44
4- 9	-2.90	0.00	0.00	0.00	0.00	0.00	-3.23
4-10	-3.62	0.00	0.00	0.00	0.00	0.00	-4.02
BOTTOM SLAB RIGHT SIDE							

Current Live Load: HL-93-TANDEM

Unfactored AXIAL FORCES (per unit design width)
due to Dead and Live Loads including Distribution and Impact

M-PT	Dead Load	Soil Press (Max)	Soil Press (Min)	Surch Hgt.	Water Press (Max)	LIVE Pos	LOADS Neg
	K	K	K	K	K	K	K
EXTERIOR WALL BOTTOM							
1- 0	-2.56	0.00	0.00	0.00	0.00	0.00	-6.74
1- 1	-2.56	0.00	0.00	0.00	0.00	0.00	-6.74
1- 2	-2.56	0.00	0.00	0.00	0.00	0.00	-6.74
1- 3	-2.56	0.00	0.00	0.00	0.00	0.00	-6.74
1- 4	-2.56	0.00	0.00	0.00	0.00	0.00	-6.74
1- 5	-2.56	0.00	0.00	0.00	0.00	0.00	-6.74
1- 6	-2.56	0.00	0.00	0.00	0.00	0.00	-6.74
1- 7	-2.56	0.00	0.00	0.00	0.00	0.00	-6.74
1- 8	-2.56	0.00	0.00	0.00	0.00	0.00	-6.74
1- 9	-2.56	0.00	0.00	0.00	0.00	0.00	-6.74
1-10	-2.56	0.00	0.00	0.00	0.00	0.00	-6.74
EXTERIOR WALL TOP							
TOP SLAB LEFT SIDE							
2- 0	0.18	-1.66	-0.83	-0.40	0.00	0.31	-0.29
2- 1	0.18	-1.66	-0.83	-0.40	0.00	0.31	-0.29
2- 2	0.18	-1.66	-0.83	-0.40	0.00	0.31	-0.29
2- 3	0.18	-1.66	-0.83	-0.40	0.00	0.31	-0.29
2- 4	0.18	-1.66	-0.83	-0.40	0.00	0.31	-0.29
2- 5	0.18	-1.66	-0.83	-0.40	0.00	0.31	-0.29
2- 6	0.18	-1.66	-0.83	-0.40	0.00	0.31	-0.29
2- 7	0.18	-1.66	-0.83	-0.40	0.00	0.31	-0.29
2- 8	0.18	-1.66	-0.83	-0.40	0.00	0.31	-0.29
2- 9	0.18	-1.66	-0.83	-0.40	0.00	0.31	-0.29
2-10	0.18	-1.66	-0.83	-0.40	0.00	0.31	-0.29

```
TOP SLAB RIGHT SIDE

BOTTOM SLAB LEFT SIDE
    4- 0   -0.18   -2.66   -1.33   -0.40    0.00    0.29   -0.31
    4- 1   -0.18   -2.66   -1.33   -0.40    0.00    0.29   -0.31
    4- 2   -0.18   -2.66   -1.33   -0.40    0.00    0.29   -0.31
    4- 3   -0.18   -2.66   -1.33   -0.40    0.00    0.29   -0.31
    4- 4   -0.18   -2.66   -1.33   -0.40    0.00    0.29   -0.31
    4- 5   -0.18   -2.66   -1.33   -0.40    0.00    0.29   -0.31
    4- 6   -0.18   -2.66   -1.33   -0.40    0.00    0.29   -0.31
    4- 7   -0.18   -2.66   -1.33   -0.40    0.00    0.29   -0.31
    4- 8   -0.18   -2.66   -1.33   -0.40    0.00    0.29   -0.31
    4- 9   -0.18   -2.66   -1.33   -0.40    0.00    0.29   -0.31
    4-10   -0.18   -2.66   -1.33   -0.40    0.00    0.29   -0.31
BOTTOM SLAB RIGHT SIDE


Factors for Ductility   1.00
            Redundancy  1.00
            Operations  1.00
```

Fatigue Checks

$f_s <= f_f = 24 - 0.33f_{min}$ (5.5.3.2-1)

where:

f_s = actual stress range in the reinforcement

f_f = maximum allowable stress range

Member	Location	f_{min} (kip)	f_f (kip)	f_s (kip)	Result
EXTERIOR WALL	Top	-52.549	24017.34	16515.18	Pass
TOP SLAB	Left	-1433.147	23527.06	4504.86	Pass
TOP SLAB	Middle -	-1433.147	23527.06	4542.30	Pass
BOTTOM SLAB	Left	-1433.147	23527.06	1162.77	Pass
BOTTOM SLAB	Middle -	-1433.147	23527.06	1131.81	Pass

LRFD Crack Control Computation

Current Vehicle: AASHTO LRFD HL-93 Design Tandem (US)

Location	γ_e	h (in.)	d_c (in.)	β_s	Max Spacing ()	Current Spacing (in.)	Allowable Stress ()	Actual Stress (kip)
Top slab, outside corner	$0.8*f_r > f_c$, therefore no check necessary.							
Top slab, inside face	0.75000000	10.00000000	2.00000000	1.35714281	7.17388058	5.00000000	42.98246384	34.62021255
Top slab, outside face	$0.8*f_r > f_c$, therefore no check necessary.							
Bottom slab, outside corner	$0.8*f_r > f_c$, therefore no check necessary.							
Bottom slab, inside face	0.75000000	10.00000000	2.00000000	1.35714281	6.44635963	6.00000000	38.68421173	37.03128433
Bottom slab, outside face	$0.8*f_r > f_c$, therefore no check necessary.							
Ext. wall, outside face	0.75000000	10.00000000	2.00000000	1.35714281	15.78255653	6.00000000	38.68421173	19.55470848
Ext. wall, inside face	$0.8*f_r > f_c$, therefore no check necessary.							

```
Lateral Distribution Steel:
  Span Length                                  =   12.833 feet
  Percentage of main reinforcement required =   27.915% , less than or equal to 50%
  Main reinforcement area (top slab)           =    0.744 in^2
  Required lateral distribution area           =    0.208 in^2
  Main reinforcement area (bottom slab)        =    0.620 in^2
  Required lateral distribution area           =    0.173 in^2
  Because the required area is less than the minimum, an area of steel of   0.200 in^2 is used.


 Bar sizes and spacings with computed areas of steel

 Areas of steel are in in2/ft

                                Top slab
LEFT SIDE                        CENTER                          RIGHT SIDE
area  0.6200 in2                 area  0.7440 in2                area  0.6200 in2
size  5 spaced at   6.00 in.     size  5 spaced at   5.00 in.    size  5 spaced at   6.00 in.
*****************************************************************************

 Exterior wall
TOP
area  0.6200 in2
size  5 spaced at   6.00 in.


OUTSIDE FACE
area  0.6200 in2
size  5 spaced at   6.00 in.

INSIDE FACE
area  0.2667 in2
size  4 spaced at   9.00 in.


BOTTOM
area  0.6200 in2
size  5 spaced at   6.00 in.
*****************************************************************************

                               Bottom slab
LEFT SIDE                        CENTER                          RIGHT SIDE
area  0.6200 in2                 area  0.6200 in2                area  0.6200 in2
size  5 spaced at   6.00 in.     size  5 spaced at   6.00 in.    size  5 spaced at   6.00 in.
```

Serviceability, Fatigue, and Other Checks

```
Based on crack control check
AASHTO 5.7.3.4 LRFD

Slenderness check on walls passed
Eccentricity check on walls passed
```

Reinforcing Bar Stresses Sizes and Spacing

```
Note: Bar stresses are based on bending and axial stress only
      Stresses are in ksi
      Area of steel in square inches per ft
      Spacing and H and V legs are in inches

 Bar Mark              Description
 A1            Top Corner Outside face Max Neg Moment
 A100          Top Slab Inside face  Max Pos Moment
 A300          Top Slab Outside face Max Neg Moment Interior support
 A2            Bottom Corner Outside face Max Neg Moment
 A200          Bottom Slab Inside face  Max Pos Moment
```

A400 Bottom Slab Outside face Max Neg Moment Interior support
B2 Exterior Wall Outside face Max Neg Moment
B1 Exterior Wall Inside face Max Pos Moment
B3 Interior Wall Both faces

Bar Type	Fs Act. (Ksi)	Fs All. (Ksi)	Area steel Input (In2)	Area steel Provided (In2)	Size US Bars	Spacing (In)	H (In)
A1	10.91	29.63	0.6200	0.6200	5	6.0	75
A2	10.09	34.62	0.6200	0.6200	5	6.0	36
A100	34.62	42.98	0.7440	0.7440	5	5.0	
A200	37.03	38.68	0.6200	0.6200	5	6.0	
B1	4.31	19.55	0.2667	0.2667	4	9.0	
B2	19.55	38.68	0.6200	0.6200	5	6.0	

Output at Critical Sections (per unit design width)

Member No. = 1 EXTERIOR WALL
Thickness = 10.00 (in)
Clear cover at end = 2.00 (in)
Clear cover at middle = 2.00 (in)
Bar diameter (bot) = 0.62 (in)
Bar diameter (mid+) = 0.50 (in)
Bar diameter (mid-) = 0.62 (in)
Bar diameter (top) = 0.62 (in)

	Moment Kft	Coin. Axial Force Kips	Shear Force Kips	Shear Cap Kips	Resistance Po Cap Kips	Mu Cap Kft	Mbal Cap Kft	Pbal Cap Kips	Steel Area In2	Mom. Cap Kft	Des. Thk in	Design Ratio
BOT	-12.0	14.1	3.9	21.4	380.5	22.7	46.0	118.7	0.6200	23.2	7.69	n/a
MID	3.9	14.1	0.6	39.3	368.8	10.1	42.4	136.9	0.2667	10.5	7.75	0.4
MID-	-10.1	14.1	0.7	25.4	380.5	22.7	46.0	118.7	0.6200	23.2	7.69	n/a
TOP	-14.5	14.1	2.9	19.9	380.5	22.7	46.0	118.7	0.6200	23.2	7.69	n/a

Member No. = 2 TOP SLAB
Thickness = 10.00 (in)
Clear cover at end = 2.00 (in)
Clear cover at middle = 2.00 (in)
Bar diameter (lt) = 0.62 (in)
Bar diameter (mid) = 0.62 (in)
Bar diameter (rt) = 0.62 (in)

LT	-6.8	3.3	12.0	18.2	380.5	22.7	46.0	118.7	0.6200	22.8	7.69	n/a
MID	23.0	3.3	3.6	14.6	384.6	27.0	47.4	112.8	0.7440	27.0	7.69	0.8
RT	-6.8	3.3	12.0	11.5	380.5	22.7	46.0	118.7	0.6200	22.8	7.69	n/a

Member No. = 4 BOTTOM SLAB
Thickness = 10.00 (in)
Clear cover at end = 2.00 (in)
Clear cover at middle = 2.00 (in)
Bar diameter (lt) = 0.62 (in)
Bar diameter (mid) = 0.62 (in)
Bar diameter (rt) = 0.62 (in)

LT	-5.5	5.0	8.6	21.6	380.5	22.7	46.0	118.7	0.6200	22.8	7.69	n/a
MID	18.6	5.0	0.1	16.3	380.5	22.7	46.0	118.7	0.6200	22.8	7.69	0.8
RT	-5.5	5.0	8.6	15.0	380.5	22.7	46.0	118.7	0.6200	22.8	7.69	n/a

Warnings:

1. For exterior corners, BRASS-CULVERT does not perform a check on both the exterior wall and top or bottom slab. BRASS-CULVERT only checks the location that it has determined requires a greater area of steel. Because of this, BRASS-CULVERT may check one location for a particular culvert (e.g. top of the wall) and a different location (e.g. left end of top slab) for the same culvert with a different depth of fill.

2. If the flexural resistance is zero and rebar has been entered, it could be due to the axial load being higher than the tensile capacity of the rebar provide. For example, the axial load is greater than the area of steel times the yield strength of the bars.

Factored Actions for Load and Resistance Factor Design at Tenth Points (per unit design width)

M-Pt	+Moment (Kft)	-Moment (Kft)	+A.F. (Kips)	-A.F. (Kips)	+Shear (Kips)	-Shear (Kips)
EXTERIOR WALL BOTTOM						
1- 0	-5.142	-16.343	-1.637	-14.138	5.082	1.997
1- 1	-1.839	-12.301	-1.637	-14.137	4.005	1.373
1- 2	0.944	-10.510	-1.637	-14.137	3.006	0.801
1- 3	2.784	-9.857	-1.637	-14.137	2.086	0.282
1- 4	3.758	-9.748	-1.637	-14.137	1.244	-0.186
1- 5	3.942	-10.086	-1.637	-14.137	0.582	-0.702
1- 6	3.414	-10.807	-1.637	-14.137	0.219	-1.387
1- 7	2.251	-11.858	-1.637	-14.137	-0.092	-1.994
1- 8	0.529	-13.190	-1.637	-14.137	-0.350	-2.523
1- 9	-1.479	-14.750	-1.637	-14.137	-0.556	-2.973
1-10	-3.007	-17.643	-1.637	-14.138	-0.710	-3.345
EXTERIOR WALL TOP						
TOP SLAB LEFT SIDE						
2- 0	-3.007	-17.643	-1.582	-3.292	14.138	1.636
2- 1	3.145	-5.661	-1.533	-3.341	11.644	0.827
2- 2	10.951	-0.919	-1.533	-3.341	9.652	-0.116
2- 3	18.284	0.000	-1.533	-3.341	7.593	-1.173
2- 4	22.314	0.000	-1.533	-3.341	5.551	-2.723
2- 5	22.979	0.000	-1.533	-3.341	3.599	-4.484
2- 6	22.561	0.000	-1.533	-3.341	2.078	-6.492
2- 7	18.671	0.000	-1.533	-3.341	0.806	-8.555
2- 8	11.392	-0.900	-1.533	-3.341	-0.199	-10.577
2- 9	2.744	-5.659	-1.533	-3.341	-1.077	-12.504
2-10	-2.825	-17.661	-1.582	-3.292	-1.632	-14.257
TOP SLAB RIGHT SIDE						
BOTTOM SLAB LEFT SIDE						
4- 0	-5.142	-16.343	-3.198	-5.006	10.332	2.305
4- 1	-2.074	-4.439	-3.198	-5.006	8.285	1.844
4- 2	6.912	-0.911	-3.247	-4.957	6.239	1.382
4- 3	13.411	0.000	-3.247	-4.957	4.192	0.921
4- 4	17.306	0.000	-3.247	-4.957	2.145	0.459
4- 5	18.605	0.000	-3.247	-4.957	0.099	-0.102
4- 6	17.307	0.000	-3.247	-4.957	-0.463	-2.149
4- 7	13.405	0.000	-3.247	-4.957	-0.925	-4.195
4- 8	6.908	-0.930	-3.247	-4.957	-1.386	-6.242
4- 9	-2.086	-4.441	-3.198	-5.006	-1.848	-8.289
4-10	-5.173	-16.361	-3.198	-5.006	-2.310	-10.335
BOTTOM SLAB RIGHT SIDE						

Output complete for a HL-93-TANDEM vehicle

LRFD Live Load Distribution Factor Computation

Input Values

Depth of Fill	= 1.99	ft.
Span Length	= 12.00	ft.
Truck Gage	= 6.00	ft.
Soil Distribution Factor	= 1.15	
Tire Patch Width	= 20.00	in.
Bridge Width	= 41.00	ft.
Lay Length	= 5.82	ft.

Compute Strip Width by 4.6.2.10.2-1

E = 96 + 1.44 S ft
E = 96 + 1.44 (12.00 ft.)
E = 9.44 ft.

Controlling Distribution Factor

Final Strip Width = 9.44 ft.

Final Distribution Factor = 1/Final Strip Width = **0.106** Lanes per ft. of width

Multiple Presence Factor = 1.20

Distribution Factor * Multiple Presence Factor = **0.127**

Notes:

1. Only the one lane loaded case is considered. The one lane loaded multiple presence factor is used. See 12.11.2.1, 3.6.1.3.3, and 4.6.2.10.
2. Lane loads are not applied. See 3.6.1.3.3. This applies to all approximate strip methods.
3. The distribution factor for fills of 2 feet or greater is bounded by the distribution factor computed in 4.6.2.10. See 3.6.1.2.6.

```
For a HL-93-LANE                Vehicle
Description AASHTO LRFD HL-93 Design Lane (US)
The Number of axles =    0

   Axle Weights     Spacing
         (kips)       (ft)

        ------      ------
Totals    0.00       0.000
```

```
For a HL-93-LANE   Vehicle
Description AASHTO LRFD HL-93 Design Lane (US)

The number of simulated axles based on fill =    1

The number of simulated axles is calculated based
on the longitudinal distribution length of each axle
divided by the simulated axle spacing of 1 foot
and the simulated axle weights are calculated by
dividing the vehicle axle weights by the number of
simulated axles per vehicle axle.


    Truck facing backwards      Truck facing forward
        Axle wts.   Spacing       Axle wts.   Spacing
        (kips)        (ft)        (kips)        (ft)
          0.00       0.000         0.00        0.000

       -------     -------      -------     -------
Totals    0.00       0.000         0.00        0.000

Note: Impact or distribution is not included in the above table.
```

Current Live Load: HL-93-LANE

Unfactored MOMENTS (per unit design width)
due to Dead and Live Loads including Distribution and Impact

M-PT	Dead Load Kft	Soil Press (Max) Kft	Soil Press (Min) Kft	Surch Hgt. Kft	Water Press (Max) Kft	LIVE LOADS Pos Kft	Neg Kft
EXTERIOR WALL BOTTOM							
1- 0	-4.64	-1.62	-0.81	-0.29	0.00	0.00	0.00
1- 1	-4.46	0.65	0.33	0.07	0.00	0.00	0.00
1- 2	-4.28	2.27	1.14	0.35	0.00	0.00	0.00
1- 3	-4.10	3.29	1.65	0.55	0.00	0.00	0.00
1- 4	-3.92	3.77	1.89	0.67	0.00	0.00	0.00
1- 5	-3.74	3.77	1.89	0.70	0.00	0.00	0.00
1- 6	-3.57	3.35	1.68	0.67	0.00	0.00	0.00
1- 7	-3.39	2.56	1.28	0.55	0.00	0.00	0.00
1- 8	-3.21	1.46	0.73	0.35	0.00	0.00	0.00
1- 9	-3.03	0.10	0.05	0.07	0.00	0.00	0.00
1-10	-2.85	-1.45	-0.73	-0.29	0.00	0.00	0.00
EXTERIOR WALL TOP							
TOP SLAB LEFT SIDE							
2- 0	-2.85	-1.45	-0.73	-0.29	0.00	0.00	0.00
2- 1	0.11	-1.45	-0.73	-0.29	0.00	0.00	0.00
2- 2	2.42	-1.45	-0.72	-0.29	0.00	0.00	0.00
2- 3	4.06	-1.45	-0.72	-0.29	0.00	0.00	0.00
2- 4	5.05	-1.45	-0.72	-0.29	0.00	0.00	0.00
2- 5	5.38	-1.44	-0.72	-0.29	0.00	0.00	0.00
2- 6	5.05	-1.44	-0.72	-0.29	0.00	0.00	0.00
2- 7	4.07	-1.44	-0.72	-0.29	0.00	0.00	0.00
2- 8	2.42	-1.44	-0.72	-0.29	0.00	0.00	0.00
2- 9	0.12	-1.44	-0.72	-0.29	0.00	0.00	0.00
2-10	-2.84	-1.43	-0.72	-0.29	0.00	0.00	0.00
TOP SLAB RIGHT SIDE							
BOTTOM SLAB LEFT SIDE							
4- 0	-4.64	-1.62	-0.81	-0.29	0.00	0.00	0.00
4- 1	-0.46	-1.62	-0.81	-0.29	0.00	0.00	0.00
4- 2	2.79	-1.62	-0.81	-0.29	0.00	0.00	0.00
4- 3	5.12	-1.62	-0.81	-0.29	0.00	0.00	0.00
4- 4	6.51	-1.63	-0.81	-0.29	0.00	0.00	0.00
4- 5	6.97	-1.63	-0.81	-0.29	0.00	0.00	0.00
4- 6	6.51	-1.63	-0.82	-0.29	0.00	0.00	0.00
4- 7	5.11	-1.63	-0.82	-0.29	0.00	0.00	0.00
4- 8	2.79	-1.63	-0.82	-0.29	0.00	0.00	0.00
4- 9	-0.46	-1.64	-0.82	-0.29	0.00	0.00	0.00
4-10	-4.65	-1.64	-0.82	-0.29	0.00	0.00	0.00
BOTTOM SLAB RIGHT SIDE							

Current Live Load: HL-93-LANE

Unfactored SHEARS (per unit design width)
due to Dead and Live Loads including Distribution and Impact

M-PT	Dead Load K	Soil Press (Max) K	Soil Press (Min) K	Surch Hgt. K	Water Press (Max) K	LIVE LOADS Pos K	Neg K
EXTERIOR WALL BOTTOM							
1- 0	0.18	2.66	1.33	0.40	0.00	0.00	0.00
1- 1	0.18	1.97	0.98	0.32	0.00	0.00	0.00
1- 2	0.18	1.33	0.67	0.24	0.00	0.00	0.00
1- 3	0.18	0.76	0.38	0.16	0.00	0.00	0.00
1- 4	0.18	0.24	0.12	0.08	0.00	0.00	0.00
1- 5	0.18	-0.23	-0.11	0.00	0.00	0.00	0.00
1- 6	0.18	-0.63	-0.31	-0.08	0.00	0.00	0.00
1- 7	0.18	-0.97	-0.49	-0.16	0.00	0.00	0.00
1- 8	0.18	-1.26	-0.63	-0.24	0.00	0.00	0.00
1- 9	0.18	-1.49	-0.74	-0.32	0.00	0.00	0.00
1-10	0.18	-1.66	-0.83	-0.40	0.00	0.00	0.00
EXTERIOR WALL TOP							
TOP SLAB LEFT SIDE							
2- 0	2.56	0.00	0.00	0.00	0.00	0.00	0.00

2- 1	2.05	0.00	0.00	0.00	0.00	0.00	0.00
2- 2	1.54	0.00	0.00	0.00	0.00	0.00	0.00
2- 3	1.03	0.00	0.00	0.00	0.00	0.00	0.00
2- 4	0.51	0.00	0.00	0.00	0.00	0.00	0.00
2- 5	0.00	0.00	0.00	0.00	0.00	0.00	0.00
2- 6	-0.51	0.00	0.00	0.00	0.00	0.00	0.00
2- 7	-1.03	0.00	0.00	0.00	0.00	0.00	0.00
2- 8	-1.54	0.00	0.00	0.00	0.00	0.00	0.00
2- 9	-2.05	0.00	0.00	0.00	0.00	0.00	0.00
2-10	-2.56	0.00	0.00	0.00	0.00	0.00	0.00

TOP SLAB RIGHT SIDE

BOTTOM SLAB LEFT SIDE

4- 0	3.62	0.00	0.00	0.00	0.00	0.00	0.00
4- 1	2.90	0.00	0.00	0.00	0.00	0.00	0.00
4- 2	2.17	0.00	0.00	0.00	0.00	0.00	0.00
4- 3	1.45	0.00	0.00	0.00	0.00	0.00	0.00
4- 4	0.72	0.00	0.00	0.00	0.00	0.00	0.00
4- 5	0.00	0.00	0.00	0.00	0.00	0.00	0.00
4- 6	-0.72	0.00	0.00	0.00	0.00	0.00	0.00
4- 7	-1.45	0.00	0.00	0.00	0.00	0.00	0.00
4- 8	-2.17	0.00	0.00	0.00	0.00	0.00	0.00
4- 9	-2.90	0.00	0.00	0.00	0.00	0.00	0.00
4-10	-3.62	0.00	0.00	0.00	0.00	0.00	0.00

BOTTOM SLAB RIGHT SIDE

Current Live Load: HL-93-LANE

Unfactored AXIAL FORCES (per unit design width)
due to Dead and Live Loads including Distribution and Impact

M-PT	Dead Load K	Soil Press (Max) K	Soil Press (Min) K	Surch Hgt. K	Water Press (Max) K	LIVE LOADS Pos K	Neg K

EXTERIOR WALL BOTTOM

1- 0	-2.56	0.00	0.00	0.00	0.00	0.00	0.00
1- 1	-2.56	0.00	0.00	0.00	0.00	0.00	0.00
1- 2	-2.56	0.00	0.00	0.00	0.00	0.00	0.00
1- 3	-2.56	0.00	0.00	0.00	0.00	0.00	0.00
1- 4	-2.56	0.00	0.00	0.00	0.00	0.00	0.00
1- 5	-2.56	0.00	0.00	0.00	0.00	0.00	0.00
1- 6	-2.56	0.00	0.00	0.00	0.00	0.00	0.00
1- 7	-2.56	0.00	0.00	0.00	0.00	0.00	0.00
1- 8	-2.56	0.00	0.00	0.00	0.00	0.00	0.00
1- 9	-2.56	0.00	0.00	0.00	0.00	0.00	0.00
1-10	-2.56	0.00	0.00	0.00	0.00	0.00	0.00

EXTERIOR WALL TOP

TOP SLAB LEFT SIDE

2- 0	0.18	-1.66	-0.83	-0.40	0.00	0.00	0.00
2- 1	0.18	-1.66	-0.83	-0.40	0.00	0.00	0.00
2- 2	0.18	-1.66	-0.83	-0.40	0.00	0.00	0.00
2- 3	0.18	-1.66	-0.83	-0.40	0.00	0.00	0.00
2- 4	0.18	-1.66	-0.83	-0.40	0.00	0.00	0.00
2- 5	0.18	-1.66	-0.83	-0.40	0.00	0.00	0.00
2- 6	0.18	-1.66	-0.83	-0.40	0.00	0.00	0.00
2- 7	0.18	-1.66	-0.83	-0.40	0.00	0.00	0.00
2- 8	0.18	-1.66	-0.83	-0.40	0.00	0.00	0.00
2- 9	0.18	-1.66	-0.83	-0.40	0.00	0.00	0.00
2-10	0.18	-1.66	-0.83	-0.40	0.00	0.00	0.00

TOP SLAB RIGHT SIDE

BOTTOM SLAB LEFT SIDE

4- 0	-0.18	-2.66	-1.33	-0.40	0.00	0.00	0.00
4- 1	-0.18	-2.66	-1.33	-0.40	0.00	0.00	0.00
4- 2	-0.18	-2.66	-1.33	-0.40	0.00	0.00	0.00
4- 3	-0.18	-2.66	-1.33	-0.40	0.00	0.00	0.00
4- 4	-0.18	-2.66	-1.33	-0.40	0.00	0.00	0.00
4- 5	-0.18	-2.66	-1.33	-0.40	0.00	0.00	0.00
4- 6	-0.18	-2.66	-1.33	-0.40	0.00	0.00	0.00
4- 7	-0.18	-2.66	-1.33	-0.40	0.00	0.00	0.00
4- 8	-0.18	-2.66	-1.33	-0.40	0.00	0.00	0.00
4- 9	-0.18	-2.66	-1.33	-0.40	0.00	0.00	0.00
4-10	-0.18	-2.66	-1.33	-0.40	0.00	0.00	0.00

BOTTOM SLAB RIGHT SIDE

Factors for Ductility 1.00

```
Redundancy  1.00
Operations  1.00
```

No Fatigue Checks Required for this Live Load

LRFD Crack Control Computation

Current Vehicle: AASHTO LRFD HL-93 Design Lane (US)

Location	γ_e	h (in.)	d_c (in.)	β_s	Max Spacing ()	Current Spacing (in.)	Allowable Stress ()	Actual Stress (kip)
Top slab, outside corner	$0.8*f_r > f_c$, therefore no check necessary.							
Top slab, inside face	$0.8*f_r > f_c$, therefore no check necessary.							
Top slab, outside face	$0.8*f_r > f_c$, therefore no check necessary.							
Bottom slab, outside corner	$0.8*f_r > f_c$, therefore no check necessary.							
Bottom slab, inside face	$0.8*f_r > f_c$, therefore no check necessary.							
Bottom slab, outside face	$0.8*f_r > f_c$, therefore no check necessary.							
Ext. wall, outside face	$0.8*f_r > f_c$, therefore no check necessary.							
Ext. wall, inside face	$0.8*f_r > f_c$, therefore no check necessary.							

```
Lateral Distribution Steel:
  Span Length                                =   12.833 feet
  Percentage of main reinforcement required =   27.915% , less than or equal to 50%
  Main reinforcement area (top slab)         =    0.744 in^2
  Required lateral distribution area         =    0.208 in^2
  Main reinforcement area (bottom slab)      =    0.620 in^2
  Required lateral distribution area         =    0.173 in^2
  Because the required area is less than the minimum, an area of steel of   0.200 in^2 is used.

 Bar sizes and spacings with computed areas of steel

 Areas of steel are in in2/ft

                              Top slab
LEFT SIDE                     CENTER                        RIGHT SIDE
area  0.6200 in2              area  0.7440 in2              area  0.6200 in2
size  5 spaced at   6.00 in.  size  5 spaced at   5.00 in.  size  5 spaced at   6.00 in.
*****************************************************************************

 Exterior wall
TOP
area  0.6200 in2
size  5 spaced at   6.00 in.


OUTSIDE FACE
area  0.6200 in2
size  5 spaced at   6.00 in.

INSIDE FACE
area  0.2667 in2
size  4 spaced at   9.00 in.
```

BOTTOM
area 0.6200 in2
size 5 spaced at 6.00 in.
****

Bottom slab

LEFT SIDE	CENTER	RIGHT SIDE
area 0.6200 in2	area 0.6200 in2	area 0.6200 in2
size 5 spaced at 6.00 in.	size 5 spaced at 6.00 in.	size 5 spaced at 6.00 in.

Serviceability, Fatigue, and Other Checks

Based on crack control check
AASHTO 5.7.3.4 LRFD

Slenderness check on walls passed
Eccentricity check on walls passed

Reinforcing Bar Stresses Sizes and Spacing

Note: Bar stresses are based on bending and axial stress only
Stresses are in ksi
Area of steel in square inches per ft
Spacing and H and V legs are in inches

Bar Mark	Description
A1	Top Corner Outside face Max Neg Moment
A100	Top Slab Inside face Max Pos Moment
A300	Top Slab Outside face Max Neg Moment Interior support
A2	Bottom Corner Outside face Max Neg Moment
A200	Bottom Slab Inside face Max Pos Moment
A400	Bottom Slab Outside face Max Neg Moment Interior support
B2	Exterior Wall Outside face Max Neg Moment
B1	Exterior Wall Inside face Max Pos Moment
B3	Interior Wall Both faces

Bar Type	Fs Act. (Ksi)	Fs All. (Ksi)	Area steel Input (In2)	Area steel Provided (In2)	Size US Bars	Spacing (In)	H (In)
A1	4.87	19.55	0.6200	0.6200	5	6.0	75
A2	7.05	19.55	0.6200	0.6200	5	6.0	36
A100	10.01	19.55	0.7440	0.7440	5	5.0	
A200	15.81	19.55	0.6200	0.6200	5	6.0	
B1	4.31	19.55	0.2667	0.2667	4	9.0	
B2	5.23	19.55	0.6200	0.6200	5	6.0	

PAGE 52
DATE 03/24/2015
BRASS-CULVERT(LRFD) Version 2.3.0
S.D. IRELAND - BRIDPORT

Output at Critical Sections (per unit design width)

Member No. = 1 EXTERIOR WALL

Thickness	=	10.00 (in)
Clear cover at end	=	2.00 (in)
Clear cover at middle	=	2.00 (in)
Bar diameter (bot)	=	0.62 (in)
Bar diameter (mid+)	=	0.50 (in)
Bar diameter (mid-)	=	0.62 (in)
Bar diameter (top)	=	0.62 (in)

	Moment Kft	Coin. Axial Force Kips	Shear Force Kips	Shear Cap Kips	Resistance Po Cap Kips	Mu Cap Kft	Mbal Cap Kft	Pbal Cap Kips	Steel Area In2	Mom. Cap Kft	Des. Thk in	Design Ratio
BOT	-3.2	2.3	3.3	26.9	380.5	22.7	46.0	118.7	0.6200	22.7	7.69	n/a
MID	3.9	2.3	0.0	24.4	368.8	10.1	42.4	136.9	0.2667	10.1	7.75	0.4
MID-	-0.2	2.3	0.2	36.2	380.5	22.7	46.0	118.7	0.6200	22.7	7.69	n/a
TOP	-2.5	2.3	2.4	28.8	380.5	22.7	46.0	118.7	0.6200	22.7	7.69	n/a

Member No. = 2 TOP SLAB

Thickness = 10.00 (in)
Clear cover at end = 2.00 (in)
Clear cover at middle = 2.00 (in)
Bar diameter (lt) = 0.62 (in)
Bar diameter (mid) = 0.62 (in)
Bar diameter (rt) = 0.62 (in)

LT	-2.6	2.8	1.9	29.3	380.5	22.7	46.0	118.7	0.6200	22.8	7.69	n/a
MID	2.9	2.8	0.0	31.1	384.6	27.0	47.4	112.8	0.7440	27.0	7.69	0.1
RT	-2.6	2.8	1.9	25.2	380.5	22.7	46.0	118.7	0.6200	22.8	7.69	n/a

Member No. = 4 BOTTOM SLAB

Thickness = 10.00 (in)
Clear cover at end = 2.00 (in)
Clear cover at middle = 2.00 (in)
Bar diameter (lt) = 0.62 (in)
Bar diameter (mid) = 0.62 (in)
Bar diameter (rt) = 0.62 (in)

LT	-3.5	4.5	2.7	28.0	380.5	22.7	46.0	118.7	0.6200	22.8	7.69	n/a
MID	4.1	4.4	0.0	29.6	380.5	22.7	46.0	118.7	0.6200	22.8	7.69	0.2
RT	-3.5	4.5	2.7	23.2	380.5	22.7	46.0	118.7	0.6200	22.8	7.69	n/a

Warnings:

1. For exterior corners, BRASS-CULVERT does not perform a check on both the exterior wall and top or bottom slab. BRASS-CULVERT only checks the location that it has determined requires a greater area of steel. Because of this, BRASS-CULVERT may check one location for a particular culvert (e.g. top of the wall) and a different location (e.g. left end of top slab) for the same culvert with a different depth of fill.

2. If the flexural resistance is zero and rebar has been entered, it could be due to the axial load being higher than the tensile capacity of the rebar provide. For example, the axial load is greater than the area of steel times the yield strength of the bars.

Factored Actions for Load and Resistance Factor Design at Tenth Points (per unit design width)

M-Pt	+Moment (Kft)	-Moment (Kft)	+A.F. (Kips)	-A.F. (Kips)	+Shear (Kips)	-Shear (Kips)
EXTERIOR WALL BOTTOM						
1- 0	-5.142	-6.906	-1.637	-2.335	4.463	2.510
1- 1	-1.839	-3.470	-1.637	-2.334	3.386	1.887
1- 2	0.944	-1.852	-1.637	-2.334	2.388	1.315
1- 3	2.784	-0.769	-1.637	-2.334	1.467	0.796
1- 4	3.758	-0.172	-1.637	-2.334	0.625	0.328
1- 5	3.942	-0.009	-1.637	-2.334	-0.037	-0.188
1- 6	3.414	-0.228	-1.637	-2.334	-0.400	-0.873
1- 7	2.251	-0.778	-1.637	-2.334	-0.710	-1.480
1- 8	0.529	-1.608	-1.637	-2.334	-0.969	-2.009
1- 9	-1.674	-2.666	-1.637	-2.334	-1.175	-2.459
1-10	-3.780	-5.057	-1.637	-2.335	-1.329	-2.831
EXTERIOR WALL TOP						
TOP SLAB LEFT SIDE						
2- 0	-3.780	-5.057	-2.125	-2.782	2.335	1.636
2- 1	-1.858	-2.391	-2.076	-2.831	1.869	1.309
2- 2	0.241	-0.919	-2.076	-2.831	1.402	0.982
2- 3	1.741	0.000	-2.076	-2.831	0.936	0.656
2- 4	2.642	0.000	-2.076	-2.831	0.469	0.329
2- 5	2.945	0.000	-2.076	-2.831	0.003	0.002
2- 6	2.649	0.000	-2.076	-2.831	-0.324	-0.465
2- 7	1.754	0.000	-2.076	-2.831	-0.651	-0.931
2- 8	0.261	-0.900	-2.076	-2.831	-0.978	-1.398
2- 9	-1.831	-2.365	-2.076	-2.831	-1.305	-1.864
2-10	-3.748	-5.024	-2.125	-2.782	-1.632	-2.331
TOP SLAB RIGHT SIDE						
BOTTOM SLAB LEFT SIDE						
4- 0	-5.142	-6.906	-3.708	-4.463	3.291	2.305
4- 1	-2.479	-3.106	-3.708	-4.463	2.633	1.844

4- 2	0.351	-0.911	-3.757	-4.414	1.974	1.382
4- 3	2.461	0.000	-3.757	-4.414	1.315	0.921
4- 4	3.726	0.000	-3.757	-4.414	0.657	0.459
4- 5	4.145	0.000	-3.757	-4.414	-0.002	-0.003
4- 6	3.719	0.000	-3.757	-4.414	-0.463	-0.661
4- 7	2.448	0.000	-3.757	-4.414	-0.925	-1.320
4- 8	0.331	-0.930	-3.757	-4.414	-1.386	-1.979
4- 9	-2.505	-3.133	-3.708	-4.463	-1.848	-2.637
4-10	-5.173	-6.940	-3.708	-4.463	-2.310	-3.296

BOTTOM SLAB RIGHT SIDE

Output complete for a HL-93-LANE vehicle

CALC BY:_____ CHECK BY:_____ APPENDIX A

DATE:_____ REV:_____ PROJECT: 12 x 9

PROBLEM: DESIGN HEADWALL

AASHTO SUGGESTS

$10000\,lb/10\,ft = 1000\,lb/ft$

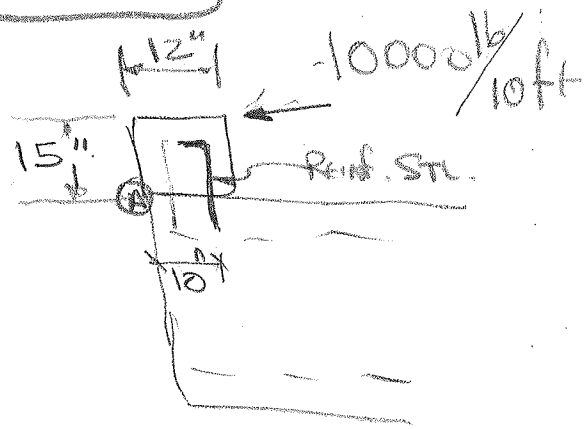

$M^{le}_{A} = 1.7 \times 1000^{lb} \times 1.25^{ft}$

$= 2125\ ft.lb/ft$

FIND ALLOW MOMENT:

$f'_c = 5000\,psi$ $\quad f_y = 60000\,psi$

$b = 12^{in}$ $\quad d = 10^{in}$ $\quad$ USE #4@12"

$A_s = 0.2\,in^2$

TENSION CAPACITY of REBAR

$= 36000^{psi} \times 0.2^{in^2} = 7200\,lb$

$M_{RESISTING} = 0.9 \times 7200^{lb} \times \frac{10^{ft}}{12} = 5400\ ft.lb$

#4 @ 12" ok SINCE 5400 > 2125.

PROBLEM DESIGN CUTOFF WALL

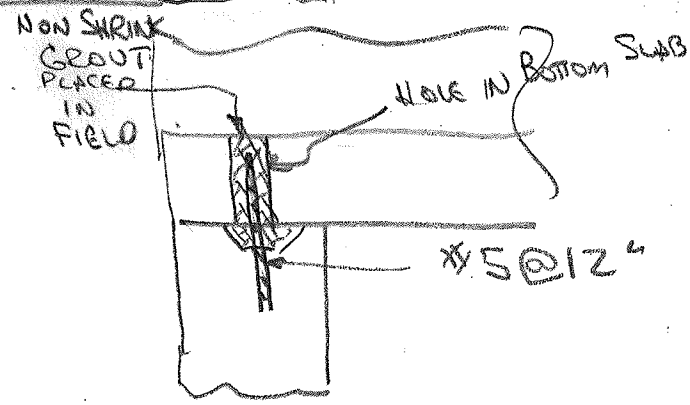

A CUT OFF WALL IS PLACED BELOW BOTTOM SLAB OF BOX CULVERT

THE PURPOSE IS TO PREVENT WATER FROM PASSING UNDER THE CULVERT. THERE IS NO REAL LOAD ON THE CO WALL BECAUSE SOIL WILL BE ON BOTH SIDES OF WALL.

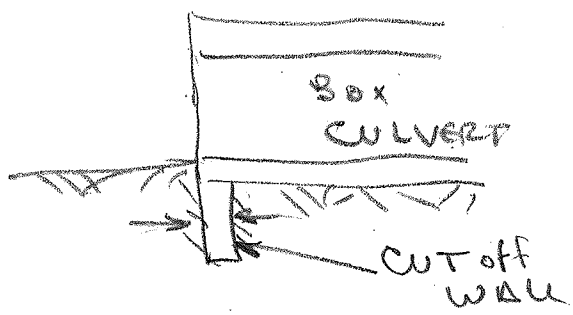

THE CONNECTION WILL ONLY PREVENT RELATIVE MOVEMENT OF WALL / CULVERT SURFACE DURING BACKFILL.

∴ #5 AT 12" CC W. NON SHRINK GROUT WILL BE SATISFACTORY

CALC BY: _____ CHECK BY: _____ APPENDIX C

DATE: _____ REV: _____ PROJECT: BRIDGE No. 5

PROB. DETERMINE LOAD APPLIED TO SOIL

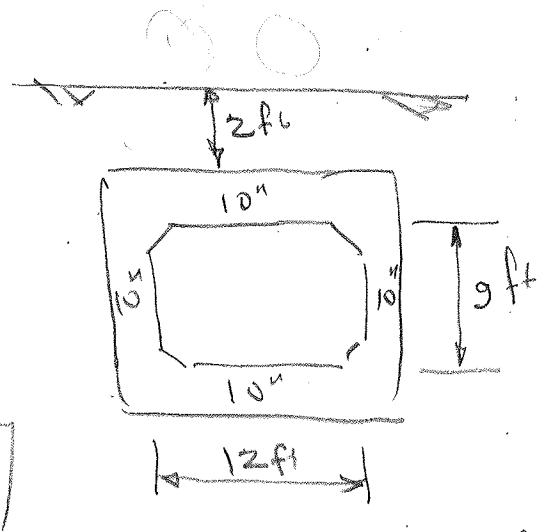

STRENGTH LIMIT STATE LRFD

DL — SOIL $1.3 \times 140^{pcf} \times 2ft = 364.\ psf$

CONC. $\frac{1.25 \times 5850^{lb/ft}}{13.67} = 535.\ psf$

LL $\frac{6714\ lb/ft/AXLE \times 2\ AXLES}{13.67\ ft} = 982.\ psf$

BEARING ON SOIL FOR TANDEM AXLE ± SOIL WT = 140 → 1881. psf

SERVICE LIMIT STATE @ 140 pcf SOIL WT.

DL SOIL — $2ft \times 140^{pcf} = 280\ psf$

CONCRETE — $\frac{5850\ lb/ft}{13.67\ ft} = 428\ psf$

LL $\frac{\left(\frac{6714\ lb/ft/AXLE}{1.75}\right) \times 2\ AXLES}{13.67\ ft} = 561\ psf$

FOR TANDEM AXLE ± SOIL WT = 140 pcf → 1269 psf

CALC BY:_____ CHECK BY: APPENDIX D

DATE:_____ REV:_____ PROJECT:_____

PROBLEM: DESIGN WALLS of INLET & OUTLET SECTIONS

$P_{6.5} = 0.33 \times 120^{pcf} \times 6.5^{ft}$

$= 260.\ psf$

PLAN VIEW

$P^u_{av} = \left(\frac{0+260}{2}\right)^{psf} \times 1.0^{ft} \times 1.7$

$= 221\ lb/ft$

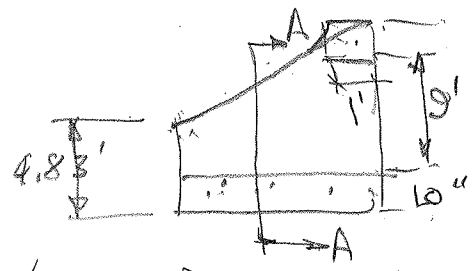

SECTION VIEW

$M^u_{(A)} = \frac{221\ lb/ft \times 6.5^2}{2} = 4700\ ft.lb/ft\ wide$

$V^u_A = 221\ lb/ft \times 6.5^{ft} = 1437.\ lb.$

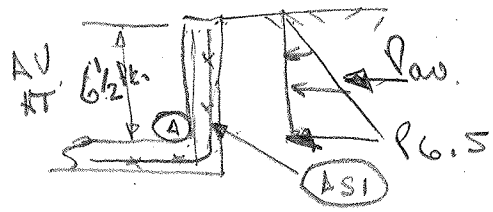

SECTION AA

FIND ALLOW. MOMENT AT (A) $f'_c = 5000\ psi$, $f_y = 60000\ psi$

$b = 12"$ $d = 10 - 2 - 1/2 = 7.5\ in.$

USE #5@6" $A_s = 0.62\ in^2$

$q = \frac{60000}{5000} \times \frac{0.62}{12 \times 7.5} = 0.083$

$\phi M_n = 0.9 \times 12 \times 7.5^2 \times 5000 \times 0.083(1 - 0.59 \times 0.083) \div 12$

$= 19000.\ ft.lb > M_u$ ok

$\phi V_n = 0.85 \times 2\sqrt{5000} \times 12 \times 7.5 = 10819\ lb > V^u$ ok

USE SAME STEEL AS USED IN BOX CULVERT