Proposed Bridge Improvement Project

Bridport STP CULV(29)

Bridge #5

Concrete:

Mix Designation: P60TER

1. Specified Mix Design - 5000 PSI
2. Proposed Mix Design - 6000 PSI
3. Striping Strength - 3000 PSI
4. Handling Strength - 3000 PSI
5. Shipping Strength - 5000 PSI
6. Install Strength - 5000 PSI
7. Traffic Loading - 5000 PSI

Fabrication Tolerances:

1. Width ±1/4"
2. Height ±1/4"
3. Length ±1/2"
4. Rebar Cover 2" Min. (Unless Noted Otherwise)
5. Rebar Spacing ±1"
6. Rebar Clearance ±1/4"
7. Insert Placement ±1/4"

Design Notes:

1. Design is in accordance w/ ASTM C1577, PCI MNL135, VAOT540 & AASHTO 2012 LRFD bridge design specs fifth edition
2. Any conflict between tolerances listed above shall result in the usage of the stricter tolerance
3. Design live load = HL-93
4. Materials and manufacturing shall conform to ASTM C1433
5. Earth Cover: ±1'-9" Soil Cover

Installation:

1. Sub Base for Box Culvert / Cut Off Walls to be Compacted and Level
2. Precast Cut Off Walls + Wing Walls to be installed
3. All Elevations are to be Checked and Verified they Match Those of Plan Set
4. Begin Sequence of Installing All Box Culvert Sections
5. Clean Granular Backfill for structures used for Backfill of Footers & of Box Culvert so water can reach weep holes if applicable
6. Fill all Lifting Holes, Bolt Pockets and Box Culvert grooves and seams w/ non-shrink grout. Applied by Site Contractor.
7. ASTM C1675-11 Box culvert installation guidelines shall be followed.

Reinforcing:

General Notes:

1. Reinforing Steel -
   a. Precast box sections, headwalls, wing walls, & cut off walls shall be level I uncoated bar ASTM A615
2. Materials and manufacturing shall conform to ASTM C1433

Tolerances:

1. Spacing ±1"
2. Clearance +1/4"

Lap Lengths:

1. Per AASHTO 5.11.2.1.1 & 5.11.5.3.1

Joint Treatment:

Vertical Seams:

Per VTrans approved product list 780.02
Overhead & vertical concrete repair mortar
Applied by site contractor

Horizontal Seams / Grout:

Per VTrans approved product list 707.03
Mortar, type IV
Applied by site contractor

Waterproofing:

1. Silane sealer applied in precast yard on all exposed surfaces (headwalls and top of wingwalls.)

Miscellaneous:

1. All bolt pocket hardware & wingwall hardware to be uncoated, black steel & shall remain in place.
2. All exposed edges of concrete shall be chamfered.
3. Concrete leveling pad for the cutoff walls is to be poured on site by the site contractor.
4. All lift anchors and embedded items will be made in America.

Legend:

- (A) 3"Ø PVC Sleeve
- (B) 4"Ø PVC Sleeve
- (C) Mechanical Bolt Pocket (w/ 1"Ø Coil Rod)
- (D) Oxford A750-7 Lifting Device
- (E) 1"Ø x $5\frac{1}{2}$" F56 Coil Loop Insert
- (F) 1 1/2" x 3 1/2" Continuous Keyway
- (G) Solid Lines Indicate $\frac{3}{4}$" Chamfer
- (H) $\frac{5}{8}$" F64 Ferrule Loop Insert

CONTRACTORS VTSPE:	Rev.	Date	By	Description

PRECAST CONCRETE BOX CULVERT SHOP DRAWINGS (SDI JOB #15428)

SUPERVISOR: E. Barendse
DETAILER: I. ADAMS
CHECKER: E. Barendse
ENGINEER: G. K. Munkelt

PROJECT NAME: Bridport
PROJECT #: CULV(29) Br.#5
LOCATION: Bridport, VT

Peckham Road Corp.
1557 St. Rt. 9, #3
Lake George, NY 12845
Ph: (518) 747-3353

FABRICATOR:
193 INDUSTRIAL AVE.
WILLISTON, VT 05495
Ph: (802) 658-0201

SD Ireland PRECAST

04/20/15 | COVER_PAGE | 1_OF_6

Plan View

Table of Units				
Name	Qty	Length	Vol.(CY)	Wt.(lbs.)*
BC-1*	1	5'-9$\frac{7}{8}$"	7.95	31,800
BC-2A	1	5'-9$\frac{7}{8}$"	9.13	36,525
BC-2	5	5'-9$\frac{7}{8}$"	8.81	35,215
BC-2B	1	5'-9$\frac{7}{8}$"	7.95	31,800
BC-3*	1	5'-9$\frac{7}{8}$"	9.13	36,525
WW-1	1	8'-0"	6.69	26,760
WW-2	1	6'-0"	5.57	22,280
WW-3	1	8'-0"	6.82	27,280
WW-4	1	6'-0"	5.51	22,040
CW-1	1	13'-8"	1.69	6,750
CW-2	1	13'-8"	1.69	6,750

* Headwall Included in BC-2A and BC-2C

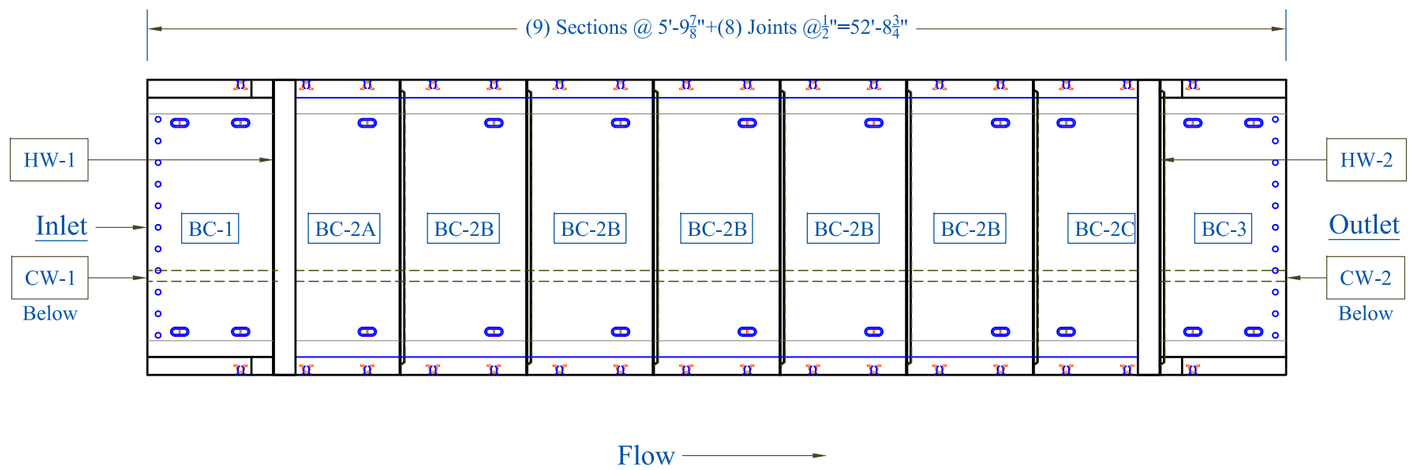

Culvert Specifications

Inside Dimensions	12'-0"Wx9'-0"H
Waterway Area	76 Sq. Ft.
Top Slab Thickness	10"
Side Wall Thickness	10"
Bottom Slab Thickness	10"

Section View

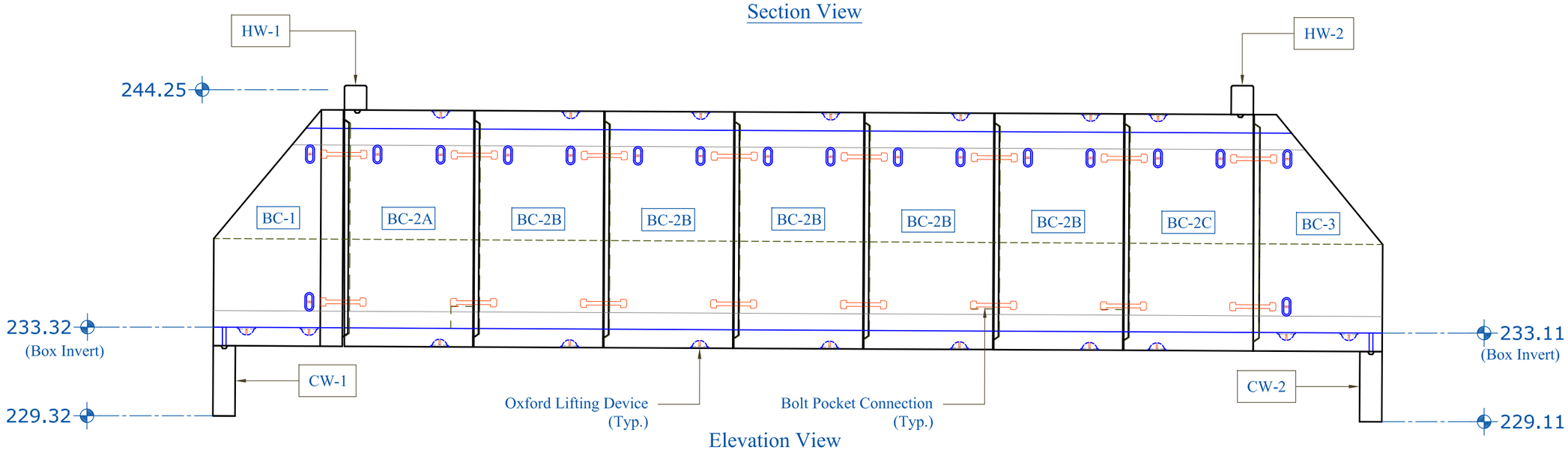

Elevation View

CONTRACTORS VTSPE:	Rev.	Date	By	Description

PRECAST CONCRETE BOX CULVERT SHOP DRAWINGS (SDI JOB #15428)

SUPERVISOR: E. Barendse
DETAILER: I. ADAMS
CHECKER: E. Barendse
ENGINEER: G. K. Munkelt

PROJECT NAME: Bridport
PROJECT #: CULV(29) Br.#5
LOCATION: Bridport, VT

Peckham Road Corp.
1557 St. Rt. 9, #3
Lake George, NY 12845
Ph: (518) 747-3353

FABRICATOR:
193 INDUSTRIAL AVE.
WILLISTON, VT 05495
Ph: (802) 658-0201

SD Ireland PRECAST

04/20/15 | PLAN_ELEVATION | 2_OF_6

BC-2A Detail

Note: See Sh. 8 for Additional Details

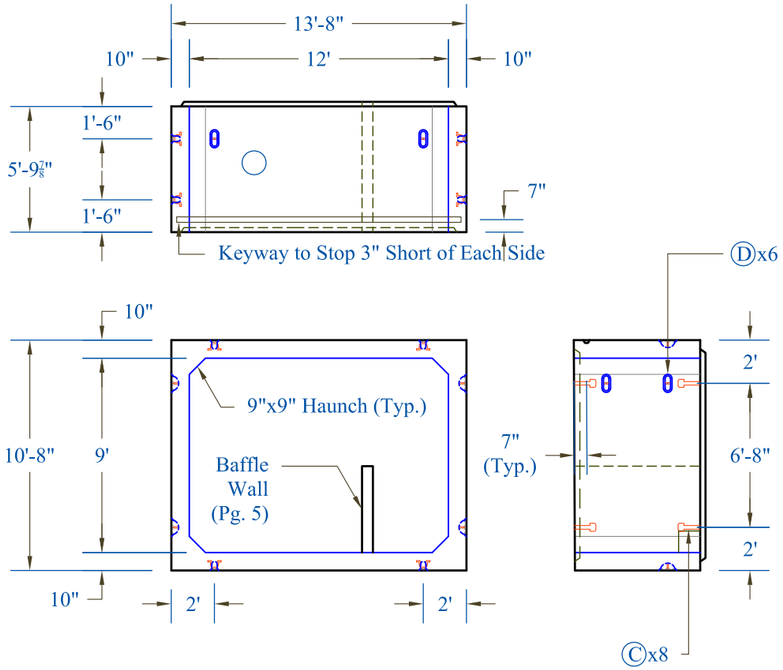

BC-2B Detail

Note: See Sh. 8 for Additional Details

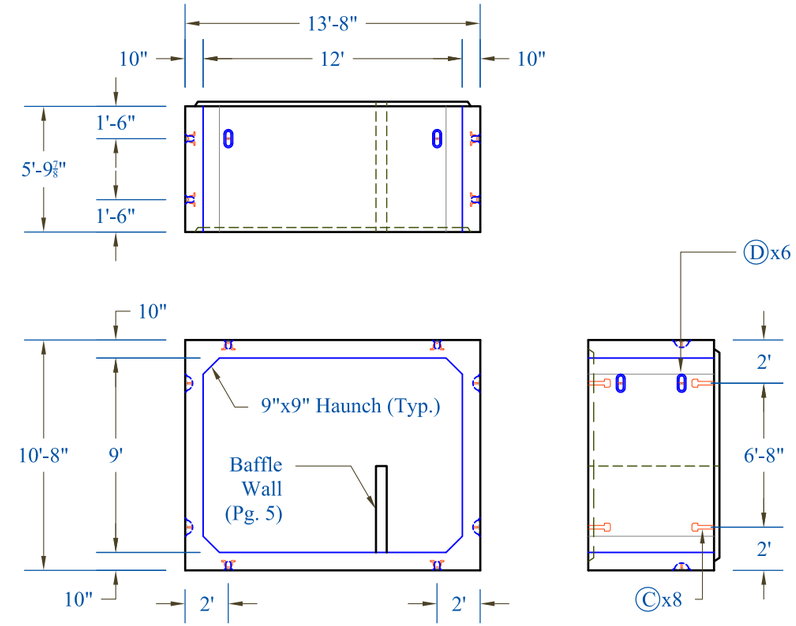

BC-2C Detail

Note: See Sh. 8 for Additional Details

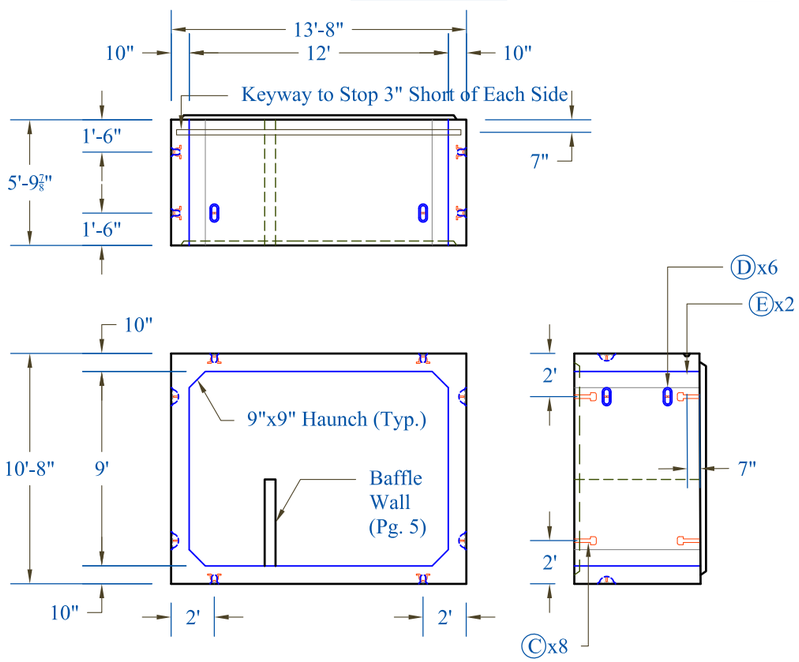

Box Section Reinforcement Detail

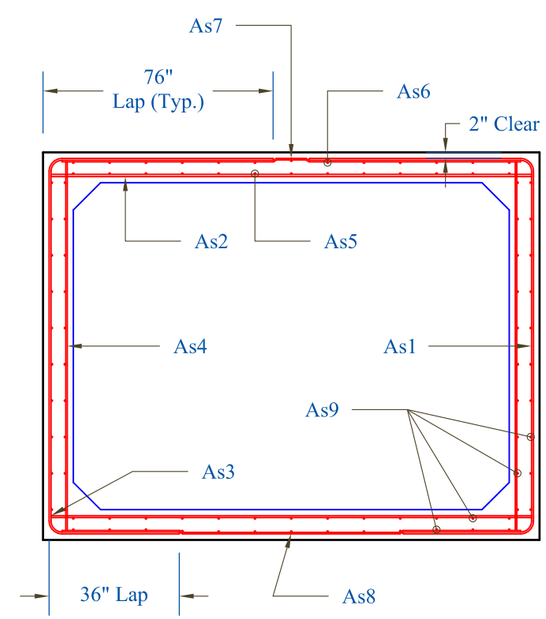

Rebar Schedule							
Mark	Size	Max Spacing	Length	Type	A	B	
As1	#5	6"	236"	Bent	36"	124"	76"
As2	#5	5"	160"	Str	160"		
As3	#5	6"	160"	Str	160"		
As4	#4	9"	124"	Str	124"		
As5	#5	10"	65"	Str	65"		
As6	#4	9"	65"	Str	65"		
As7	#4	9"	160"	Str	160"		
As8	#4	9"	160"	Str	160"		
As9	#4	12"	65"	Str	65"		

Notes: 2" Clear Typical Unless Noted Otherwise

CONTRACTORS VTSPE:

- Ⓐ 3"Ø PVC Sleeve
- Ⓑ 4"Ø PVC Sleeve
- Ⓒ Mechanical Bolt Pocket (w/ 1"Ø Coil Rod)
- Ⓓ Oxford A750-7 Lifting Device
- Ⓔ 1"Øx5½" F56 Coil Loop Insert
- Ⓕ 1 1/2" x 3 1/2" Continuous Keyway
- Ⓖ Solid Lines Indicate ¾" Chamfer
- Ⓗ ⅝" F64 Ferrule Loop Insert

Rev.	Date	By	Description

PRECAST CONCRETE BOX CULVERT SHOP DRAWINGS (SDI JOB #15428)

SUPERVISOR: E. Barendse
DETAILER: I. ADAMS
CHECKER: E. Barendse
ENGINEER: G. K. Munkelt

PROJECT NAME: Bridport
PROJECT #: CULV(29) Br.#5
LOCATION: Bridport, VT

Peckham Road Corp.
1557 St. Rt. 9, #3
Lake George, NY 12845
Ph: (518) 747-3353

FABRICATOR:
193 INDUSTRIAL AVE.
WILLISTON, VT 05495
Ph: (802) 658-0201

SD Ireland PRECAST

04/20/15 | BOX_SECTIONS_1 | 3_OF_6

BC-1 Detail

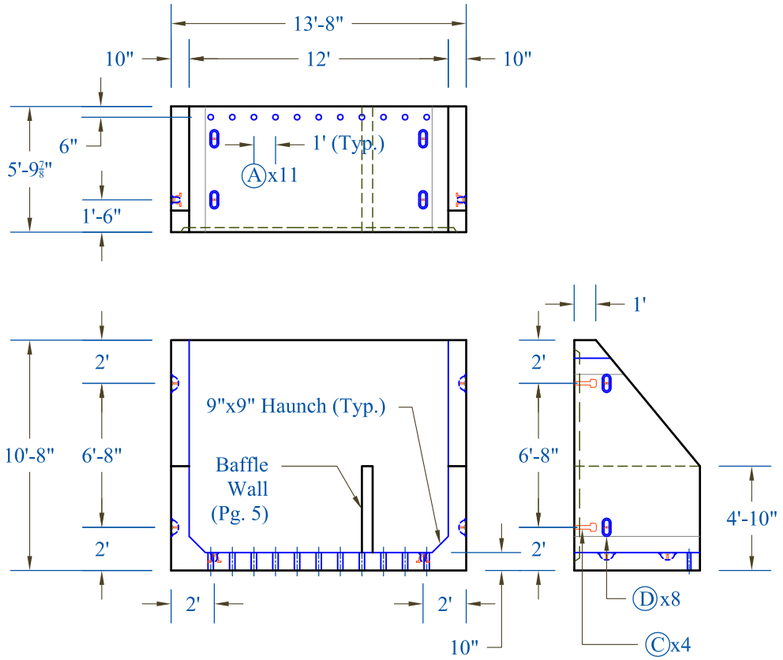

BC-3 Detail

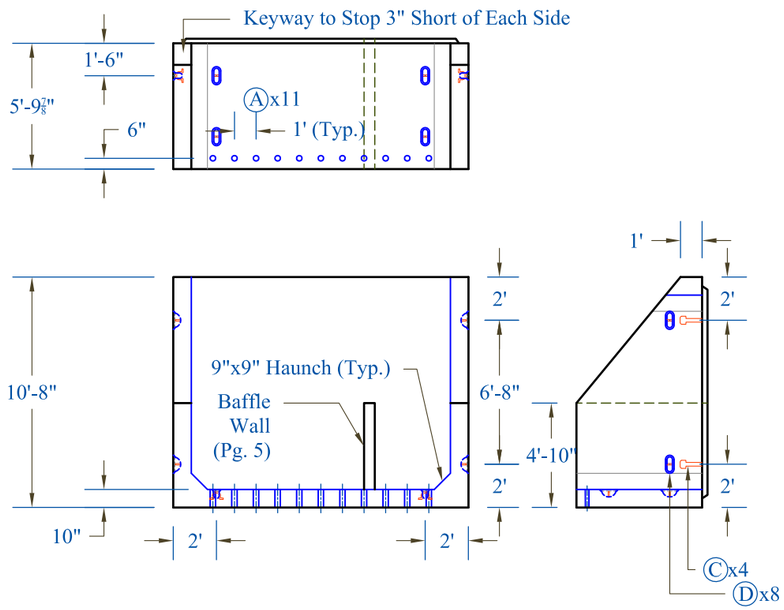

Headwall 1 Detail

(See Reinforcing Details on Sheet 7)

Note: - Secondary Pour
- Not Battered

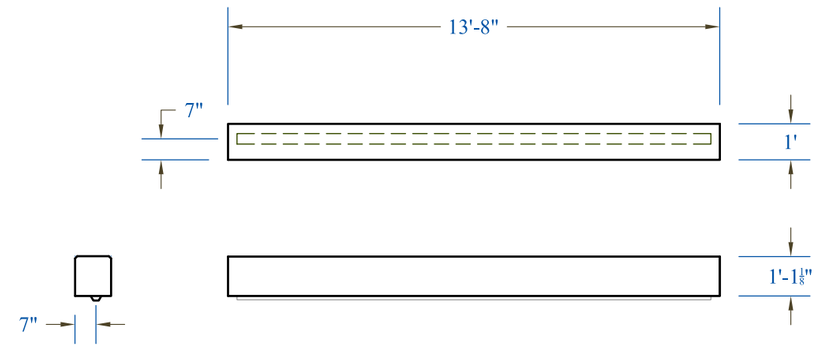

Headwall 2 Detail

(See Reinforcing Details on Sheet 7)

Note: - Secondary Pour
- Not Battered

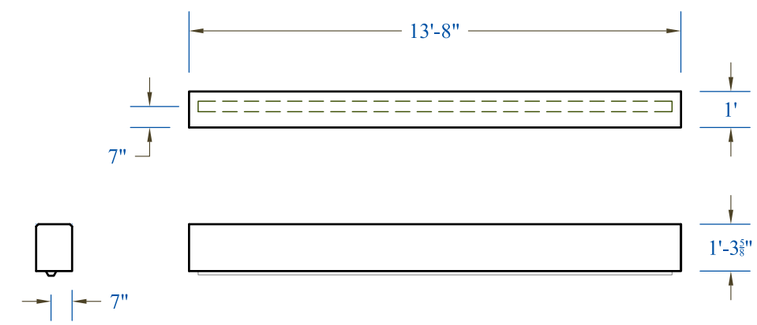

Headwall 2 Detail

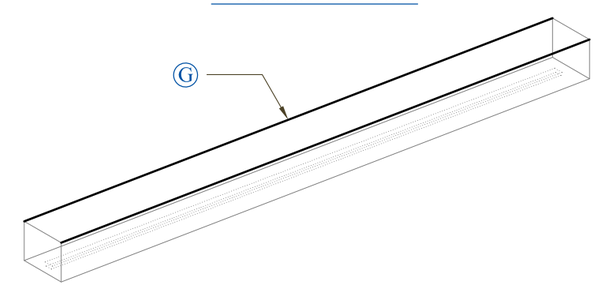

CONTRACTORS VTSPE:

- Ⓐ 3"Ø PVC Sleeve
- Ⓑ 4"Ø PVC Sleeve
- Ⓒ Mechanical Bolt Pocket (w/ 1"Ø Coil Rod)
- Ⓓ Oxford A750-7 Lifting Device
- Ⓔ 1"Øx5½" F56 Coil Loop Insert
- Ⓕ 1 1/2" x 3 1/2" Continuous Keyway
- Ⓖ Solid Lines Indicate ¾" Chamfer
- Ⓗ ⅝" F64 Ferrule Loop Insert

Rev.	Date	By	Description

PRECAST CONCRETE BOX CULVERT SHOP DRAWINGS (SDI JOB #15428)

SUPERVISOR: E. Barendse
DETAILER: I. ADAMS
CHECKER: E. Barendse
ENGINEER: G. K. Munkelt

PROJECT NAME: Bridport
PROJECT #: CULV(29) Br.#5
LOCATION: Bridport, VT

Peckham Road Corp.
1557 St. Rt. 9, #3
Lake George, NY 12845
Ph: (518) 747-3353

FABRICATOR:
193 INDUSTRIAL AVE.
WILLISTON, VT 05495
Ph: (802) 658-0201

SD Ireland PRECAST

04/20/15 | WING_WALLS_1 | 4_OF_6

CW-1/2 Detail

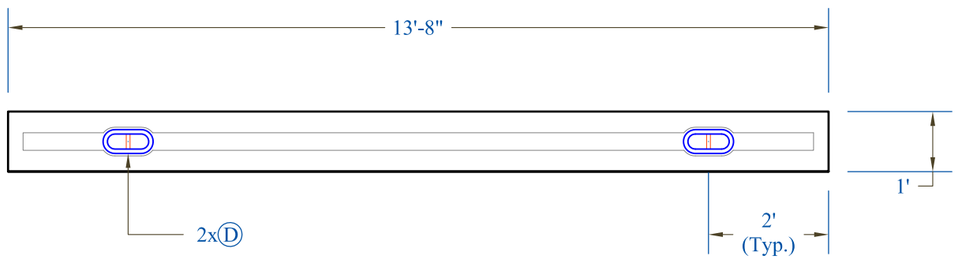

Baffle Wall Detail

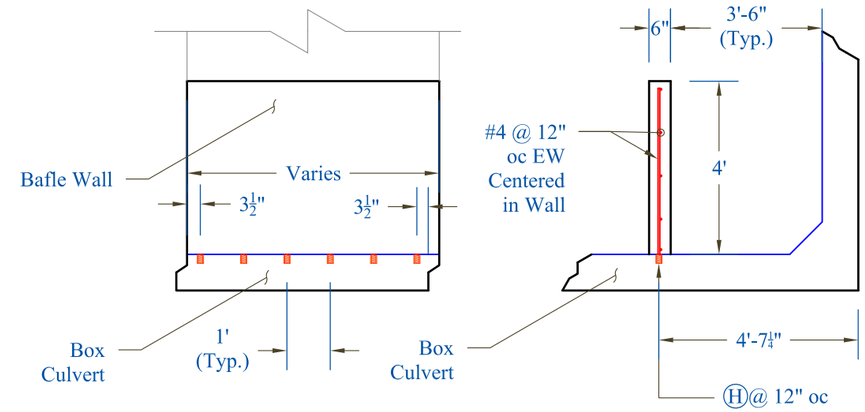

Side Elevation

Front Elevation

Cutoff Wall Reinforcement Detail

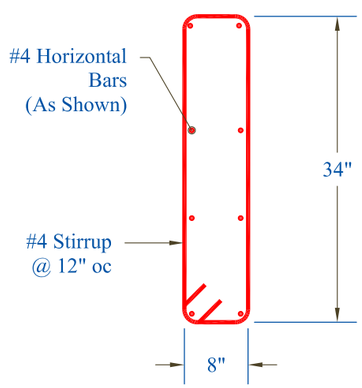

CW-1 Detail

Note: 2" Clear Cover

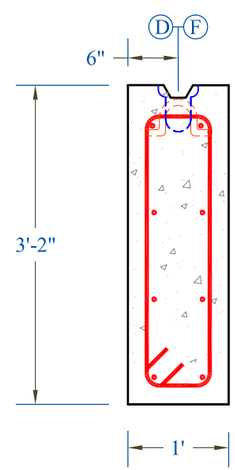

CW-2 Detail

Note: 2" Clear Cover

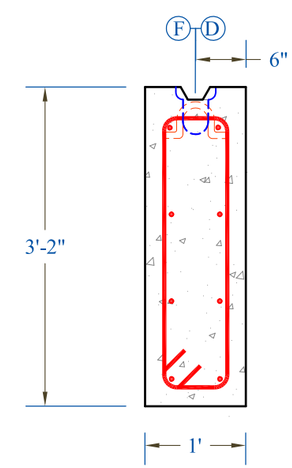

CONTRACTORS VTSPE:

- (A) 3"Ø PVC Sleeve
- (B) 4"Ø PVC Sleeve
- (C) Mechanical Bolt Pocket (w/ 1"Ø Coil Rod)
- (D) Oxford A750-7 Lifting Device
- (E) 1"Øx5½" F56 Coil Loop Insert
- (F) 1 1/2" x 3 1/2" Continuous Keyway
- (G) Solid Lines Indicate ¾" Chamfer
- (H) ⅝" F64 Ferrule Loop Insert

Rev.	Date	By	Description

PRECAST CONCRETE BOX CULVERT SHOP DRAWINGS (SDI JOB #15428)

SUPERVISOR: E. Barendse
DETAILER: I. ADAMS
CHECKER: E. Barendse
ENGINEER: G. K. Munkelt

PROJECT NAME: Bridport
PROJECT #: CULV(29) Br.#5
LOCATION: Bridport, VT

Peckham Road Corp.
1557 St. Rt. 9, #3
Lake George, NY 12845
Ph: (518) 747-3353

FABRICATOR:
193 INDUSTRIAL AVE.
WILLISTON, VT 05495
Ph: (802) 658-0201

SD Ireland PRECAST

04/20/15 | HW_CW_DETAILS | 5_OF_6

BC Vertical Shear Key Detail

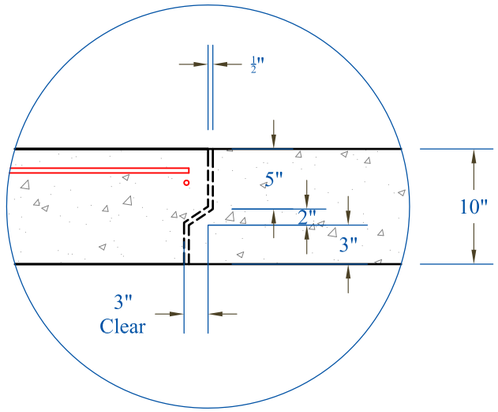

HW to BC Connection Detail

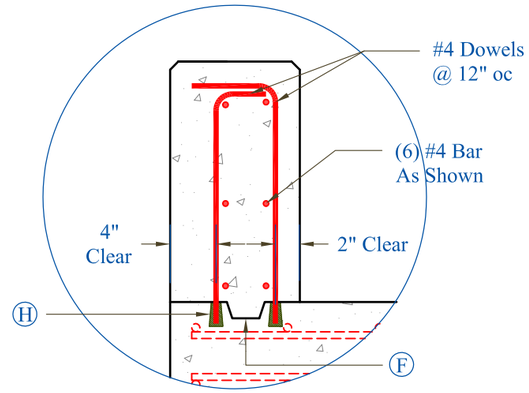

CW to BC Connection Detail

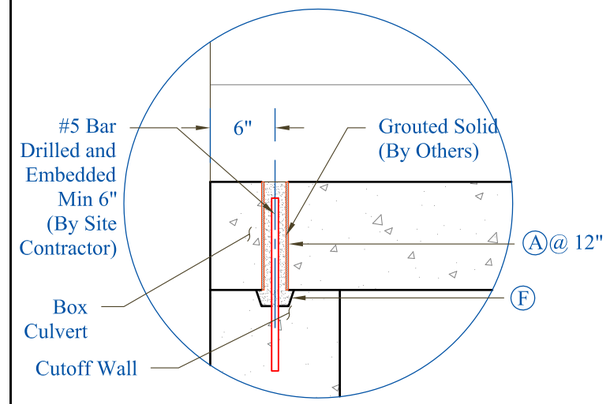

Bolt Pocket Connection Detail - C

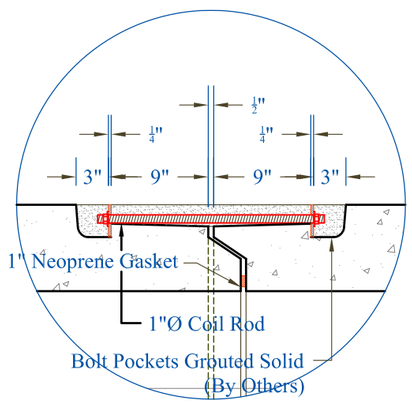

HW-1 Reinforcement Detail

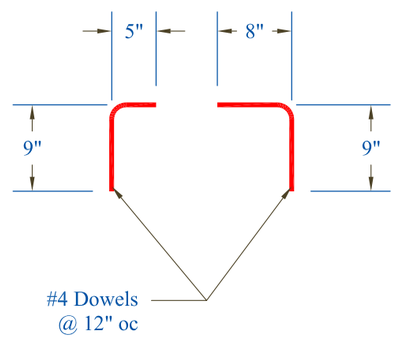

Keyway Connection Detail - F

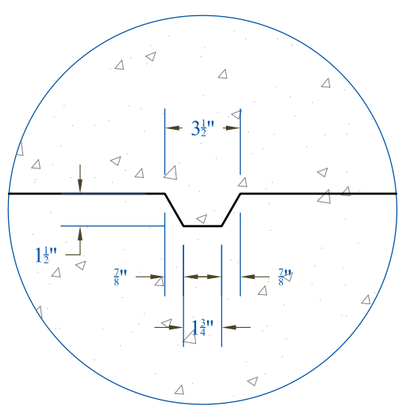

HW-2 Reinforcement Detail

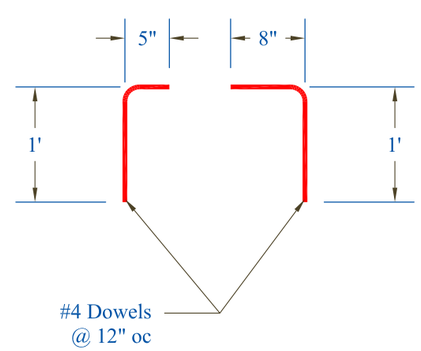

CONTRACTORS VTSPE:

- A 3"Ø PVC Sleeve
- B 4"Ø PVC Sleeve
- C Mechanical Bolt Pocket (w/ 1"Ø Coil Rod)
- D Oxford A750-7 Lifting Device
- E 1"Øx5½" F56 Coil Loop Insert
- F 1 1/2" x 3 1/2" Continuous Keyway
- G Solid Lines Indicate ¾" Chamfer
- H ⅝" F64 Ferrule Loop Insert

Rev.	Date	By	Description

PRECAST CONCRETE BOX CULVERT SHOP DRAWINGS (SDI JOB #15428)

SUPERVISOR: E. Barendse
DETAILER: I. ADAMS
CHECKER: E. Barendse
ENGINEER: G. K. Munkelt

PROJECT NAME: Bridport
PROJECT #: CULV(29) Br.#5
LOCATION: Bridport, VT

Peckham Road Corp.
1557 St. Rt. 9, #3
Lake George, NY 12845
Ph: (518) 747-3353

FABRICATOR:
193 INDUSTRIAL AVE.
WILLISTON, VT 05495
Ph: (802) 658-0201

SD Ireland PRECAST

04/20/15 | CONNECTION_DETAILS | 6_OF_6