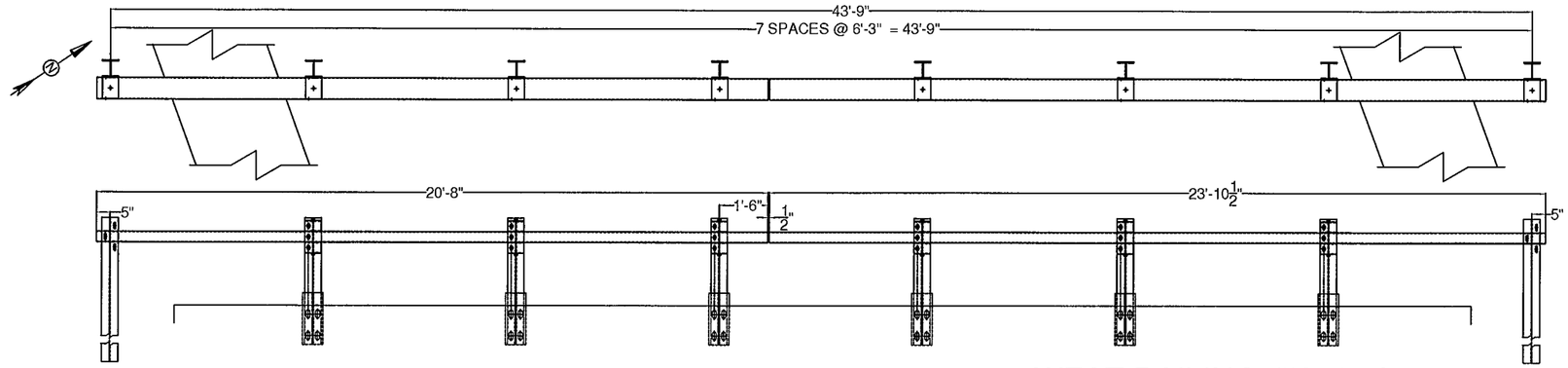

"W" PANEL NOT SHOWN FOR DRAWING CLARITY

WEST RAILING, FACING WEST (EAST RAIL SIMILAR)

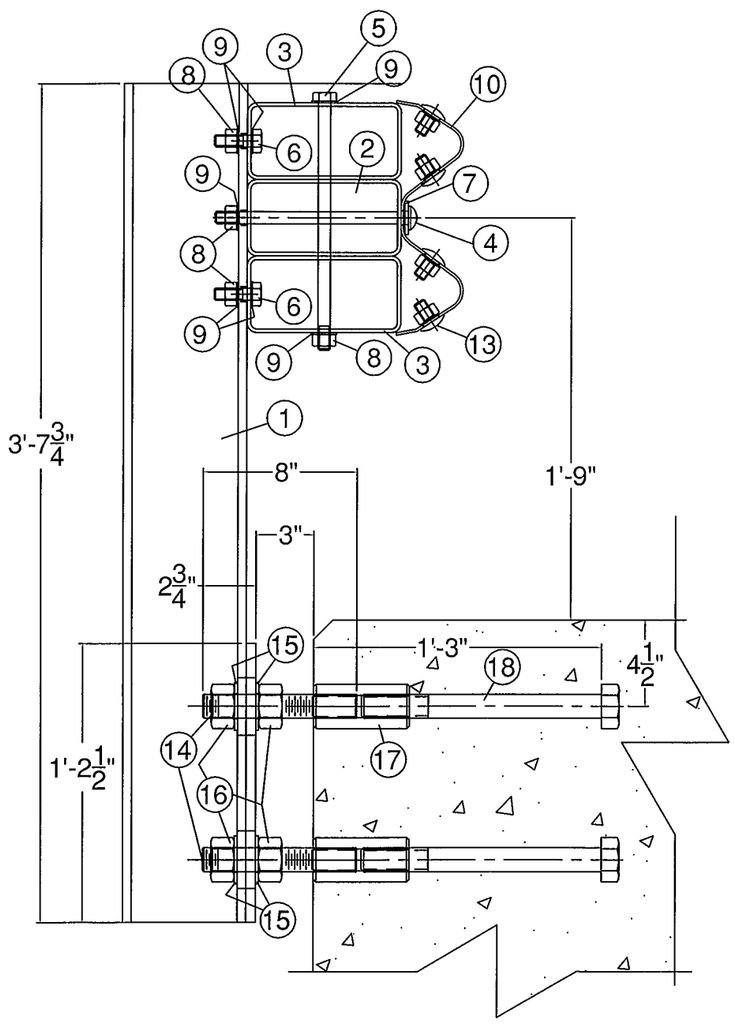

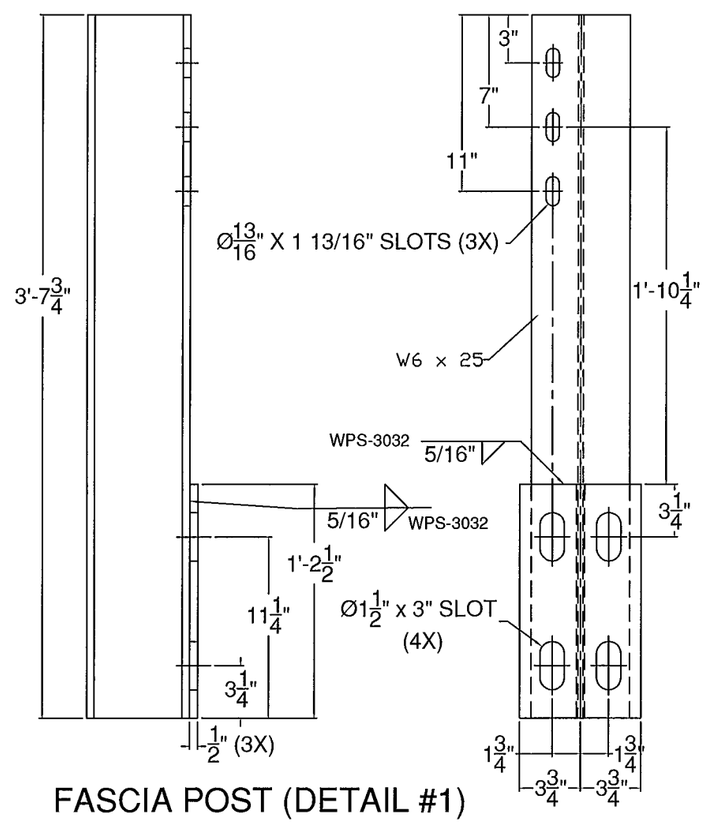

FASCIA POST (DETAIL #1)

BILL OF MATERIAL				
DET#	QTY	PART		ASTM DESIGNATION
1	12	TBD	W6x25, TYPE 1, FASCIA POST @ 3'-7 3/4'	ASTM A572 Gr. 50
2	2	TBD	HSS8x4x3/16' TUBING @ 20'-8'	ASTM A500 Gr. B
2	2	TBD	HSS8x4x3/16' TUBING @ 23'-10 1/2'	ASTM A500 Gr. B
3	32	0033.90045	HSS8x4x3/16' TUBE BLOCKOUT @ 6'	ASTM A500 Gr. B
4	16	0080.05710	5/8'x10' POST BOLT, NUT, & F.W.	ASTM A307
5	16	0080.15595	5/8'x13' HEX BOLT	ASTM A307
6	40	0080.15036	5/8'x2' HEX BOLT	ASTM A307
7	16	0080.15913	3/16'x1 3/4'x3' SPECIAL WASHER	ASTM A36
8	64	0080.15901	5/8' HEX NUT	ASTM A307
9	120	0080.15911	5/8' FLAT WASHER	ASTM A307
10	6	6043.00012	10 GAUGE 'W' BEAM @ 12'-6' C.-C.	AASHTO M180, CLASS B, TYPE II
10	2	6043.00002	10 GAUGE 'W' BEAM @ 6'-3' C.-C.	AASHTO M180, CLASS B, TYPE II
11	4	0033.90301	W6X25 POST @ 6'-0' O.A. (POST #1)	ASTM A572 Gr. 50
* 12	6	-	DELINEATOR - TO BE SUPPLIED BY FR LAFAYETTE	ALUMINUM
13	64	0080.15013	5/8'x1-1/4' SPLICE BOLT (PANEL ASS'Y)	ASTM A307
13	64	0080.15905	5/8'x1-1/4' RECESSED NUT (PANEL ASS'Y)	ASTM A307
14	48	0042.21408	1 1/4'x8' STUD	ASTM A449
15	96	0080.19922	5/16'x2 1/2'x3 1/2' FASCIA PLATE WASHERS	ASTM A572 Gr. 50
16	96	0080.19918	1 1/4' HEX NUT	ASTM A563
17	48	0080.19921	1 1/4' x 5' COUPLER NUT W/ RT. HAND MACH. THD.	ASTM A563
18	48	0042.21412	1 1/4' x 12' MACHINE BOLT, THREAD LEN. @ 3'	ASTM A449
19	2	0033.90074	C7x9.8 CHANNEL SPLICE @ 2'-6 1/2'	ASTM A36

*- SUPPLIED BY OTHERS

NOTES:
1. ALL WORK AND MATERIALS SHALL CONFORM TO SECTION 525.
2. GRIND ALL EDGES TO A MINIMUM RADIUS OF 1/16", PRIOR TO GALVANIZING.
3. ALL POSTS SHALL BE SET NORMAL TO GRADE.
4. SPLICES FOR THE STEEL BEAM GUARDRAIL SHALL LAP IN THE DIRECTION OF TRAFFIC.
5. A RAILING JOINT SPLICE SHALL BE PROVIDED IN ANY RAIL BAY SPANNING THE END OF AN INTEGRAL ABUTMENT BRIDGE AND AT ALL SUPERSTRUCTURE EXPANSION JOINTS.
6. SEE STANDARD DRAWING G-I FOR DETAILS OF DELINEATORS. A DELINEATOR SHALL BE INSTALLED AT 30 FOOT SPACING OR THE NEAREST POST. WHITE IS TO BE INSTALLED ON THE DRIVER'S RIGHT. FOR ONE WAY BRIDGES, YELLOW IS TO BE INSTALLED ON THE DRIVER'S LEFT.
7. THE 1/2" EXPANSION JOINT SHOWN IN THE RAILING ELEVATION IS DESIGNED FOR BRIDGE LENGTHS UP TO 80 FEET, ANY LONGER SPANS WILL HAVE TO BE MODIFIED TO ACCOUNT FOR THEIR MOVEMENT.
8. FOR RADII LESS THAN 950 FEET, HSS8x4 TUBES SHALL BE SHOP BENT TO FIT THE APPLICABLE CURVE.
9. THE MINIMUM DISTANCE FROM THE LAST POST TO THE END OF SLAB IS 1'-6".
10. FERRULES SHALL BE 12L14 COLD DRAWN CARBON STEEL.
11. HOLES IN RAIL FOR RAIL TUBE ATTACHMENT WILL BE SHOP DRILLED. HOLES SHALL BE COATED WITH AN APPROVED ZINC-RICH PAINT PRIOR TO INSTALLATION.
12. THIS RAILING MEETS THE REQUIREMENTS FOR A TL-2 SERVICE LEVEL.

ITEM #: 525.44

SHEET 1 OF 2

STRUCTURAL STEEL TO COMPLY W/ ASTM A6

GALVANIZING TO BE PER ASTM A123, UNLESS OTHERWISE SPECIFIED.

TOLERANCE UNLESS OTHERWISE NOTED:
HOLES - ± 1/32'
FRACTIONS - ± 1/16'
ANGLES - ± 1/2°

BRIDGE RAIL DETAILS SHEET

ROUTE NO: TOWN HIHGHWAY 22, CLASS 3 (CAMELS HUMP ROAD) BRIDGE NO : 30
TOWN OF HUNTINGTON, COUNTY OF CHITTENDEN, VERMONT

R E V	NO.	DATE	DESCRIPTION	BY	R E V	NO.	DATE	DESCRIPTION	BY

ELDERLEE, INC.
OAKS CORNERS, NEW YORK 14518
email: dlong@elderlee.com / epeek@elderlee.com
Tel: 315-789-6670 Fax: 315-789-6615

AISC CERTIFIED FABRICATOR

ORTHOGRAPHIC PROJECTION

DRAWN	D.K.	2/23/16
CHECKED	E.P.	2/24/16
APPROVED	D.L.	2/24/16
SCALE	SCHEMATIC	
DRAWING NO.	FR LaFAYETTE-HUNTINGTON	

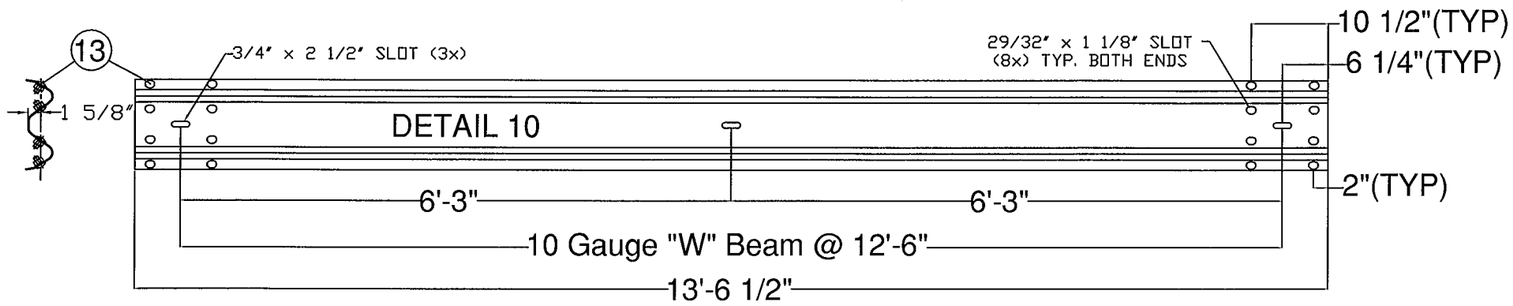

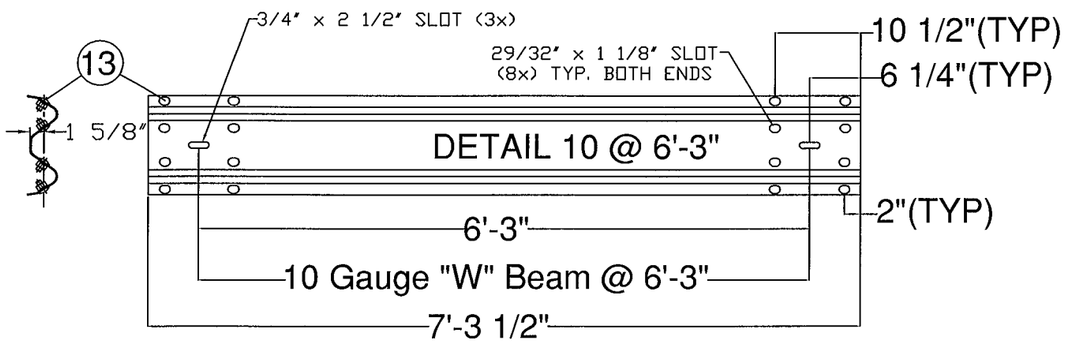

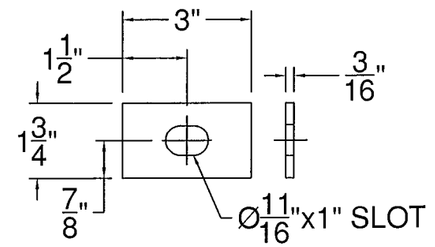

SPECIAL WASHER (DETAIL #7)

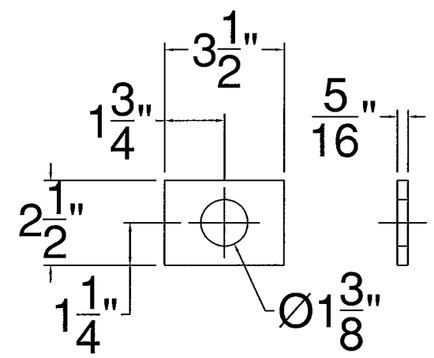

FASCIA PLATE WASHER (DETAIL #15)

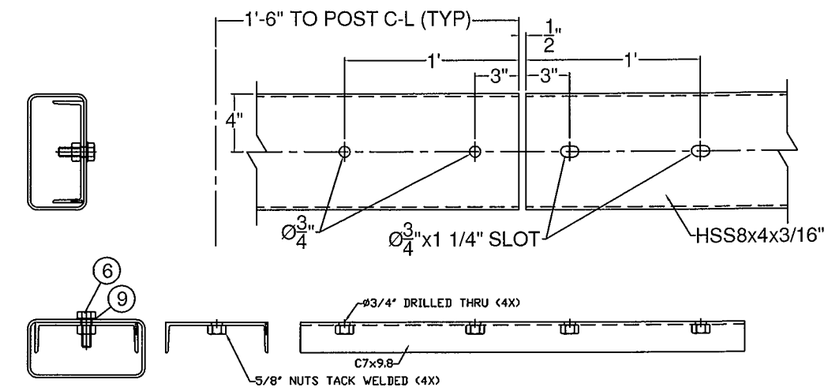

SPLICE (DETAIL #19)

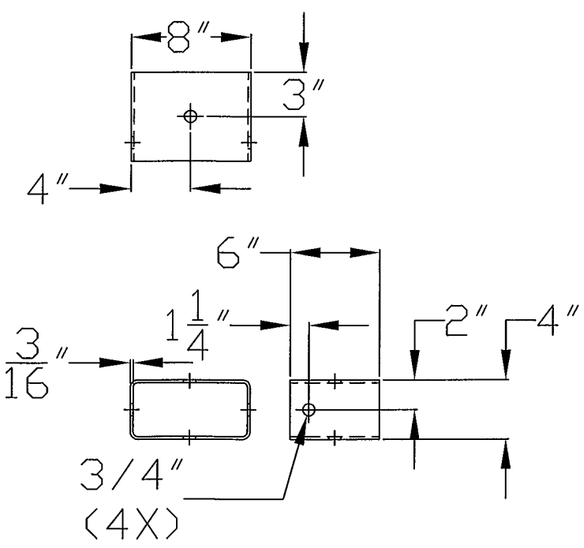

BLOCK OUT (DETAIL #3)

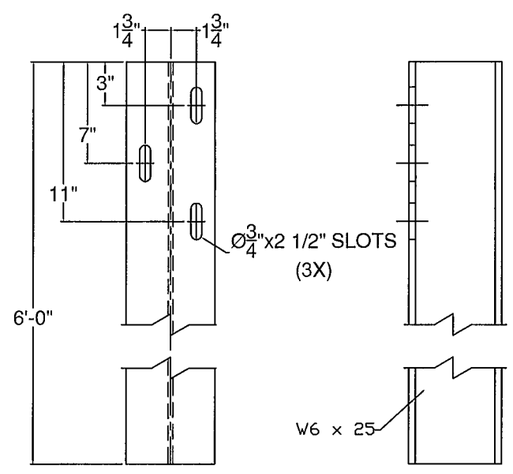

DETAIL #11

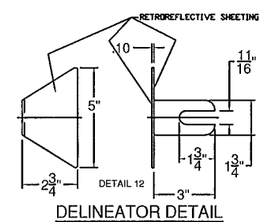

DELINEATOR DETAIL

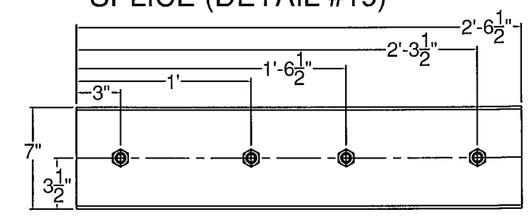

ITEM #: 525.44

SHEET 2 OF 2

STRUCTURAL STEEL TO COMPLY W/ ASTM A6

GALVANIZING TO BE PER ASTM A123, UNLESS OTHERWISE SPECIFIED.

TOLERANCE UNLESS OTHERWISE NOTED:
HOLES - ± 1/32"
FRACTIONS - ± 1/16"
ANGLES - ± 1/2°

BRIDGE RAIL DETAILS SHEET

ROUTE NO: TOWN HIHGHWAY 22, CLASS 3 (CAMELS HUMP ROAD) BRIDGE NO : 30
TOWN OF HUNTINGTON, COUNTY OF CHITTENDEN, VERMONT

REV	NO.	DATE	DESCRIPTION	BY	REV	NO.	DATE	DESCRIPTION	BY

ELDERLEE, INC.
OAKS CORNERS, NEW YORK 14518
email: dlong@elderlee.com / epeek@elderlee.com
Tel: 315-789-6670 Fax: 315-789-6615

AISC CERTIFIED FABRICATOR

ORTHOGRAPHIC PROJECTION

DRAWN	D.K.	2/23/16
CHECKED	E.P.	2/24/16
APPROVED	D.L.	2/24/16
SCALE	SCHEMATIC	

DRAWING NO. FR LaFAYETTE-HUNTINGTON

WELDING PROCEDURE SPECIFICATION

PQR ELDERLEE #3

Material Specification	A572 GR. 50 TO A572 GR. 50
Welding Process	FCAW-G
Manual or Machine	SEMAUTOMATIC
Position of Welding	FLAT/HORIZONTAL
Filler Metal Specification	A5.29
Filler Metal Classification	E81T1-Ni1C-JH4
Flux	N/A
Shielding Gas	CO 2 Dew Point -40DEG F Flow Rate 50CFH
Single or Multiple Pass	SINGLE
Single or Multiple Arc	SINGLE
Welding Current	DC ELECTRODE POSITIVE
Polarity	REVERSE
Welding Progression	STRINGER
Root Treatment	PER D1.5
Preheat and Interpass Temperature	PER D1.5
Postheat Temperature	NONE
Heat Input	Min Max

WELDING PROCEDURE

Pass no.	Electrode size	Welding Current		Travel speed	Joint detail
		Amperes	Volts		
1	1/16	310	25	11	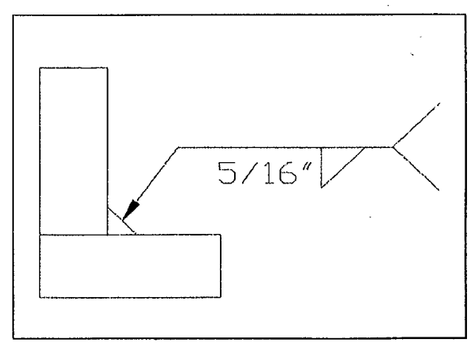
Variable	LIMITS	341 TO 269	27 TO 23	12 TO 10	

This procedure may vary due to fabrication sequence, fit-up, pass size, etc., within the limitation of variables given in Section 5.

Procedure No.	3032	Contractor	Elderlee, Inc.
Revision No.		Authorized By	RANDY SCOTT
		Date	2/17/2016