# ACROW PANEL BRIDGE

FOR

PARENT CONSTRUCTION, INC.
HINESBURG, VT

HANCOCK ER BRF 0174 (16)
VT ROUTE 125
HANCOCK, VT

CLIENT: ACROW CORPORATION OF AMERICA
181 NEW ROAD
PARSIPPANY, NJ 07054

TERRY WAITE, PE
VT PROFESSIONAL ENGINEER
P.E. LICENSE NUMBER: VT 6585
DECEMBER 10, 2012

**ACROW** CORPORATION OF AMERICA

## CONTENTS


| PAGE(S) | DESCRIPTION |
|---|---|
| A | BASIS OF DESIGN |
| 1 | TRANSOM ANALYSIS |
| 2-3 | TRUSS ANALYSIS |
| 4 | REACTIONS |
| R1-R3` | REFERENCE |
| SH. 1-5 | DRAWINGS |

# BASIS OF DESIGN*

## ACROW BRIDGE FOR
## PARENT CONSTRUCTION, INC.
## HINESBURG, VT
## DECEMBER 2012

Design Specifications:

2002 AASHTO Standard Specifications for Highway Bridges, 17th Edition

Design Method:

Allowable Stress Design

Loading

1) Two lanes HS 20-44
2) 2" Asphalt Overlay
3) AASHTO Wind Loading (.450 klf)

Bridge Type:

Bridge is a 700XS Acrow Panel Bridge. It covers a simple span of 80 feet. The side truss construction is Double Single Reinforced One (DSR1). The roadway is 24 ft wide curb-curb.

Components Analyzed:

1. Trusses
2. Transom

**Notes:**

1. Foundation, Railing and Anchor Bolts to be designed by others.

* Design criteria confirmed by Parent Construction, Inc.

TRANSOM

*Live Load:*

**LOAD = 2 Lanes HS 20-44** **(Wheels Positioned for Maximum Moment)**

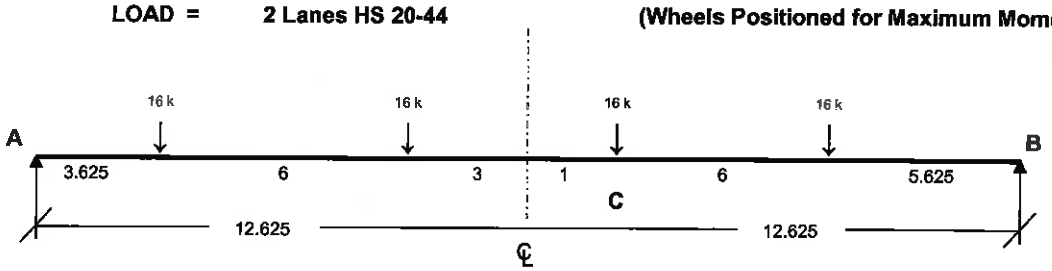


$\Sigma M_A$ = 16 k ( 3.625 + 9.625 + 13.625 + 19.625 ) - B ( 25.25 )

**B =** 29.47 k
**A =** 34.53 k

$\Sigma M_C$ = 16 k ( 6.00 ) - 29.47 k ( 11.625 )

= -246.53 k-ft + 30% Impact = **320.5 k-ft**

*Dead Load:*

| | | |
|---|---|---|
| TRANSOM = | 2.60 k | 2.60 k |
| DECK = | 26 psf * ( 10 ) * ( 24 ) | 6.24 k |
| 2" ASPHALT = | 25 psf * ( 10 ) * ( 24 ) | 6.00 k |
| BRACING = | 0.65 k | 0.65 k |
| | | 15.49 k |

$$M_{DL} = \frac{15.49 * 25.25}{8} = \mathbf{48.89\ k\text{-}ft}$$

$M_{TOT}$ = 320.5 k-fl + 48.89 k-fl = **369.4 k-ft**

$F_y$ = 50 ksi
$F_b$ = (0.55) * 50 ksi = 27.5 ksi

$$f_b = \frac{369.4\ \text{k-ft} * 12\ ^{in}/_{ft}}{176\ in^3} = 25.2\ \text{ksi}$$

$S_{xx}$ of W24x76 ( AB585 )

$f_b$ = 25.2 ksi < 27.5 ksi ∴ **OK**

**Shear is Negligible**

TRUSS

Span: 80 ft
Truss: DSR1
Load : 2 Lanes HS 20-44
Bridge Type: Acrow Series 700XS
Bridge coating is 2" Asphalt Overlay

Impact: $\frac{50}{125+\ 80}$ = 24.4% Eccentricity: 7%

DSR1 = 3.93 $^{k}/_{bay}$ (Truss)
2L24 = 9.49 $^{k}/_{bay}$ (Deck,Transom,Bracing)
Total ***13.42***

$M_{DL\ Bridge}$ : $\frac{(\ 1.342\ ^{k}/_{ft}) * (\ 80\ ft)^2}{8}$ = **1,073.60 k-ft**

$V_{DL\ Bridge}$: $\frac{(\ 1.342\ ^{k}/_{ft}) * (\ 80\ ft\ )}{2}$ = **53.68 k**

**Asphalt Coating** 12.5 lbs/in/$_{sq.ft}$ * 2" * 24 ft roadway/ 1000 = 0.600 $^{k}/_{ft}$

$M_{DL\ Coating}$ $\frac{(\ 0.600\ ^{k}/_{ft}) * (\ 80\ ft)^2}{8}$ = **480.00 k-ft**

$V_{DL\ Coating}$ : $\frac{(\ 0.600\ ^{k}/_{ft}) * (\ 80\ ft\ )}{2}$ = **24.00 k**

**Live Load Figures are Per AASHTO** **"TABLE OF MAXIMUM MOMENTS,SHEARS AND REACTIONS-SIMPLE SPANS, ONE LANE"**

$M_{LL+I+Ecc.}$ : 1164.9 k-ft x 2 lanes + 24.4% (Imp) + 7% (Ecc.) = **3,101.15 k-ft**

$V_{LL+I+Ecc.}$ : 63.6 k x 2 lanes + 24.4% (Imp) + 7% (Ecc.) = **169.31 k**

$M_{TOT}$ : 1073.6 k-ft + 480 k-ft + 3101.15 k-ft = 4654.75 k-ft

$V_{TOT}$ : 53.68 k + 24.0 k + 169.31 k = 246.99 k

$F_{b\ Allowable}$ = 0.55 X 65 Ksi = 35.75 Ksi

$f_b$ = $\frac{4{,}654.75\ \text{k-ft} * 12\ ^{in}/_{ft}}{2{,}113\ in^3}$ = 26.43 ksi < 35.75 Ksi ∴ OK

DSR1 (see Ref.)

$V_{ALL}$ = 261 k (AB 702)

246.99 k < 261.0 k ∴ OK

∴ DOUBLE SINGLE REINFORCED ONE TRUSS

Prepared by:
GJM
Checked by:
SPP

**Shear Check @ Interior Bays**

Shear Capacity of AB701 Panels = 174 k ***(See Reference)***

(1-(174 k / 246.99 k)) x (S/2) = .296* 40 = 11.84 ft
∴ Check Shear at 20'

| | | | | | |
|---|---|---|---|---|---|
| $V_{DBridge}$ @ 20FT: | 0.5 | **((S/2)-20)/(S/2)** | X 53.68 K | = | 26.84 K |
| $V_{DCoating}$ @ 20 FT: | 0.5 | **((S/2)-20)/(S/2)** | X 24.00 K | = | 12 K |
| $V_{LL}$ @ 20 FT: | 0.75 | **((S-20)/S)** | X 169.31 K | = | 84.66 K |
| | | | $V_{Tot}$ = | | 123.50 K |

$$\frac{V_u}{V_n} = \frac{123.5}{174} = 0.71 \quad \text{OK}$$

Bays 1,2,7 and 8 AB 702's
Bays 3,4,5 and 6 AB 701's

# 700XS SERIES ACROW PANEL BRIDGE REACTIONS

## PER CORNER OF BRIDGE

HANCOCK, VT **80 ft. X 2L24 X DSR1**

### REACTION (KIPS):

| | |
|---|---|
| Bridge Dead Load | 27 |
| 2" Asphalt Overlay | 12 |
| HS 20-44 Loading w/ Ecc.: | 68 |
| ***Total:*** | **107** |

Transverse (Wind) = .45 $^{kips}/_{L.ft.}$ * 80 ft ÷ $2_{Comers}$ = 18

(Per AASHTO Min.)

NOTE:

*Reactions are per CORNER of bridge*

*Reactions are UNFACTORED*

Prepared by:
GJM
Checked by:
SPP

# REFERENCES

R1

## SELF WEIGHTS OF ACROW PANEL 700XS BRIDGES

### TABLE A:

***Weights of Decks & Width Dependent Components***
***Weights given are per 10 ft bay in kips or metric tonnes***

| *Width* | *Including Deck* | | *Without Deck* | |
|---|---|---|---|---|
| | *Kips* | *Tonnes* | *Kips* | *Tonnes* |
| **SCW** | 4.47 | 2.028 | 1.21 | 0.549 |
| **EW** | 5.09 | 2.309 | 1.43 | 0.649 |
| **EW(HVY)** | 5.35 | 2.427 | 1.69 | 0.767 |
| **EW18** | 6.67 | 3.026 | 1.86 | 0.844 |
| **2L24** | 9.49 | 4.306 | 3.12 | 1.416 |
| **2L24(HVY)** | 10.04 | 4.555 | 3.67 | 1.665 |
| **2L30** | 12.53 | 5.685 | 4.61 | 2.092 |
| **2L30(HVY)** | 13.60 | 6.171 | 5.6 | 2.541 |
| **3L36** | 18.39 | 8.344 | 8.91 | 4.043 |

### TABLE B:

***Weights of Truss Components***
***Weights are given for 10ft bays and include both trusses***

| *Truss* | *Kips* | *Tonnes* | *Truss* | *Kips* | *Tonnes* |
|---|---|---|---|---|---|
| **SS** | 1.59 | 0.721 | **DD** | 6.32 | 2.868 |
| **SSR** | 2.21 | 1.003 | **DDR1** | 6.94 | 3.149 |
| **SSRH** | 2.38 | 1.080 | **DDR1H** | 7.11 | 3.226 |
| | | | **DDR2** | 7.55 | 3.426 |
| **DS** | 3.31 | 1.502 | **DDR2H** | 7.90 | 3.584 |
| **DSR1** | 3.93 | 1.783 | | | |
| **DSR1H** | 4.10 | 1.860 | **TD** | 9.27 | 4.206 |
| **DSR2** | 4.54 | 2.060 | **TDR2** | 10.50 | 4.764 |
| **DSR2H** | 4.89 | 2.219 | **TDR2H** | 10.85 | 4.923 |
| | | | **TDR3** | 11.12 | 5.045 |
| **TS** | 4.82 | 2.187 | **TDR3H** | 11.64 | 5.281 |
| **TSR2** | 6.06 | 2.750 | | | |
| **TSR2H** | 6.41 | 2.908 | **QD** | 12.19 | 5.531 |
| **TSR3** | 6.67 | 3.026 | **QDR** | 14.66 | 6.652 |
| **TSR3H** | 7.20 | 3.267 | **QDRH** | 15.36 | 6.969 |

**For Asphalt add 12.5 lbs per inch thickness per square foot**
**For Epoxy Aggregate Anti-Skid Coating add 3 lbs per square foot**
**For 5 ft wide footwalk add 0.14 kips per foot**

R2

8/27/2012

# TABLE OF PROPERTIES FOR ACROW 700XS BRIDGE

| TRUSS CONSTRUCTION | SECTION MODULUS | | MOMENT OF INERTIA | | SHEAR VALUES | | | | | | | |
|---|---|---|---|---|---|---|---|---|---|---|---|---|
| | | | | | 701 With Endpost | | 702 Without Endpost | | 702 With Endpost | | 708 Without Endpost | |
| | $in^3$ | $cm^3$ | $in^4$ | $cm^4$ | kips | kN | kips | kN | kips | kN | kips | kN |
| SS | 700 | 11,471 | 31,544 | 1,312,960 | 120 | 534 | 180 | 801 | N/A | N/A | 230 | 1,023 |
| DS | 1,400 | 22,942 | 63,088 | 2,625,921 | 240 | 1,068 | 360 | 1,601 | N/A | N/A | 460 | 2,046 |
| SSR | 1,413 | 23,155 | 69,222 | 2,881,237 | 120 | 534 | 180 | 801 | N/A | N/A | 230 | 1,023 |
| SSRH | 1,585 | 25,973 | 79,268 | 3,299,383 | 120 | 534 | 180 | 801 | N/A | N/A | 230 | 1,023 |
| TS | 2,100 | 34,413 | 94,632 | 3,938,881 | 360 | 1,601 | 540 | 2,402 | N/A | N/A | 690 | 3,069 |
| DSR1 | 2,113 | 34,626 | 100,766 | 4,194,198 | 174 | 774 | 261 | 1,161 | N/A | N/A | 334 | 1,486 |
| DSR1H | 2,285 | 37,444 | 110,812 | 4,612,344 | 167 | 743 | 250 | 1,112 | N/A | N/A | 320 | 1,423 |
| QS | 2,800 | 45,884 | 126,176 | 5,251,842 | 480 | 2,135 | 720 | 3,203 | N/A | N/A | 920 | 4,092 |
| DSR2 | 2,826 | 46,310 | 138,444 | 5,762,474 | 240 | 1,068 | 360 | 1,601 | N/A | N/A | 460 | 2,046 |
| DD | 2,936 | 48,112 | 264,200 | 10,996,834 | 360 | 1,601 | 360 | 1,601 | 480 | 2,135 | 460 | 2,046 |
| DSR2H | 3,170 | 51,947 | 158,536 | 6,598,767 | 240 | 1,068 | 360 | 1,601 | N/A | N/A | 460 | 2,046 |
| TSR2 | 3,526 | 57,781 | 169,988 | 7,075,435 | 295 | 1,312 | 442 | 1,966 | N/A | N/A | 566 | 2,518 |
| TSR2H | 3,870 | 63,418 | 190,080 | 7,911,727 | 288 | 1,281 | 432 | 1,922 | N/A | N/A | 552 | 2,455 |
| TSR3 | 4,239 | 69,465 | 207,666 | 8,643,712 | 360 | 1,601 | 540 | 2,402 | N/A | N/A | 690 | 3,069 |
| TD | 4,404 | 72,169 | 396,300 | 16,495,251 | 540 | 2,402 | 540 | 2,402 | 720 | 3,203 | 690 | 3,069 |
| DDR1 | 4,408 | 72,234 | 408,426 | 16,999,974 | 266 | 1,183 | 266 | 1,183 | 354 | 1,575 | 334 | 1,486 |
| TSR3H | 4,755 | 77,920 | 237,804 | 9,898,150 | 360 | 1,601 | 540 | 2,402 | N/A | N/A | 690 | 3,069 |
| DDR1H | 4,762 | 78,035 | 444,978 | 18,521,383 | 258 | 1,148 | 258 | 1,148 | 342 | 1,521 | 320 | 1,423 |
| QSR4 | 5,652 | 92,620 | 276,888 | 11,524,949 | 480 | 2,135 | 720 | 3,203 | N/A | N/A | 920 | 4,092 |
| QD | 5,872 | 96,225 | 528,400 | 21,993,669 | 720 | 3,203 | 720 | 3,203 | 960 | 4,270 | 920 | 4,092 |
| DDR2 | 5,880 | 96,356 | 552,652 | 23,003,113 | 360 | 1,601 | 360 | 1,601 | 480 | 2,135 | 460 | 2,046 |
| QSR4H | 6,340 | 103,894 | 317,072 | 13,197,533 | 480 | 2,135 | 720 | 3,203 | N/A | N/A | 920 | 4,092 |
| DDR2H | 6,588 | 107,958 | 625,756 | 26,045,931 | 360 | 1,601 | 360 | 1,601 | 480 | 2,135 | 460 | 2,046 |
| TDR2 | 7,348 | 120,412 | 684,752 | 28,501,530 | 446 | 1,984 | 446 | 1,984 | 594 | 2,642 | 566 | 2,518 |
| TDR2H | 8,056 | 132,014 | 757,856 | 31,544,348 | 436 | 1,939 | 436 | 1,939 | 582 | 2,589 | 552 | 2,455 |
| TDR3 | 8,820 | 144,534 | 828,978 | 34,504,669 | 540 | 2,402 | 540 | 2,402 | 720 | 3,203 | 690 | 3,069 |
| TDR3H | 9,882 | 161,937 | 938,634 | 39,068,897 | 540 | 2,402 | 540 | 2,402 | 720 | 3,203 | 690 | 3,069 |
| QDR4 | 11,760 | 192,712 | 1,105,304 | 46,006,226 | 720 | 3,203 | 720 | 3,203 | 960 | 4,270 | 920 | 4,092 |
| QDRH | 13,176 | 215,916 | 1,251,512 | 52,091,862 | 720 | 3,203 | 720 | 3,203 | 960 | 4,270 | 920 | 4,092 |

NOTE: Transom seats are limited to 44 kips (196 kN) for the AB701 and 66 kips (294 kN) on the AB702. For high volumes of heavy transom seat loads, reduce the allowable transom seat load by a factor of 0.75.

22

R3



# LOADING—HS 20-44 (MS18)

## TABLE OF MAXIMUM MOMENTS, SHEARS, AND REACTIONS—SIMPLE SPANS, ONE LANE

Spans in feet; moments in thousands of foot-pounds; shears and reactions in thousands of pounds.

These values are subject to specification reduction for loading of multiple lanes.

Impact not included.

| Span | Moment | End shear and end reaction (a) | Span | Moment | End shear and end reaction (a) |
|---|---|---|---|---|---|
| 1 | 8.0(b) | 32.0(b) | 42 | 485.3(b) | 56.0(b) |
| 2 | 16.0(b) | 32.0(b) | 44 | 520.9(b) | 56.7(b) |
| 3 | 24.0(b) | 32.0(b) | 46 | 556.5(b) | 57.3(b) |
| 4 | 32.0(b) | 32.0(b) | 48 | 592.1(b) | 58.0(b) |
| 5 | 40.0(b) | 32.0(b) | 50 | 627.9(b) | 58.5(b) |
| 6 | 48.0(b) | 32.0(b) | 52 | 663.6(b) | 59.1(b) |
| 7 | 56.0(b) | 32.0(b) | 54 | 699.3(b) | 59.6(b) |
| 8 | 64.0(b) | 32.0(b) | 56 | 735.1(b) | 60.0(b) |
| 9 | 72.0(b) | 32.0(b) | 58 | 770.8(b) | 60.4(b) |
| 10 | 80.0(b) | 32.0(b) | 60 | 806.5(b) | 60.8(b) |
| 11 | 88.0(b) | 32.0(b) | 62 | 842.4(b) | 61.2(b) |
| 12 | 96.0(b) | 32.0(b) | 64 | 878.1(b) | 61.5(b) |
| 13 | 104.0(b) | 32.0(b) | 66 | 914.0(b) | 61.9(b) |
| 14 | 112.0(b) | 32.0(b) | 68 | 949.7(b) | 62.1(b) |
| 15 | 120.0(b) | 34.1(b) | 70 | 985.6(b) | 62.4(b) |
| 16 | 128.0(b) | 36.0(b) | 75 | 1,075.1(b) | 63.1(b) |
| 17 | 136.0(b) | 37.7(b) | 80 | 1,164.9(b) | 63.6(b) |
| 18 | 144.0(b) | 39.1(b) | 85 | 1,254.7(b) | 64.1(b) |
| 19 | 152.0(b) | 40.4(b) | 90 | 1,344.4(b) | 64.5(b) |
| 20 | 160.0(b) | 41.6(b) | 95 | 1,434.1(b) | 64.9(b) |
| 21 | 168.0(b) | 42.7(b) | 100 | 1,524.0(b) | 65.3(b) |
| 22 | 176.0(b) | 43.6(b) | 110 | 1,703.6(b) | 65.9(b) |
| 23 | 184.0(b) | 44.5(b) | 120 | 1,883.3(b) | 66.4(b) |
| 24 | 192.7(b) | 45.3(b) | 130 | 2,063.1(b) | 67.6 |
| 25 | 207.4(b) | 46.1(b) | 140 | 2,242.8(b) | 70.8 |
| 26 | 222.2(b) | 46.8(b) | 150 | 2,475.1 | 74.0 |
| 27 | 237.0(b) | 47.4(b) | 160 | 2,768.0 | 77.2 |
| 28 | 252.0(b) | 48.0(b) | 170 | 3,077.1 | 80.4 |
| 29 | 267.0(b) | 48.8(b) | 180 | 3,402.1 | 83.6 |
| 30 | 282.1(b) | 49.6(b) | 190 | 3,743.1 | 86.8 |
| 31 | 297.3(b) | 50.3(b) | 200 | 4,100.0 | 90.0 |
| 32 | 312.5(b) | 51.0(b) | 220 | 4,862.0 | 96.4 |
| 33 | 327.8(b) | 51.6(b) | 240 | 5,688.0 | 102.8 |
| 34 | 343.5(b) | 52.2(b) | 260 | 6,578.0 | 109.2 |
| 35 | 361.2(b) | 52.8(b) | 280 | 7,532.0 | 115.6 |
| 36 | 378.9(b) | 53.3(b) | 300 | 8,550.0 | 122.0 |
| 37 | 396.6(b) | 53.8(b) | | | |
| 38 | 414.3(b) | 54.3(b) | | | |
| 39 | 432.1(b) | 54.8(b) | | | |
| 40 | 449.8(b) | 55.2(b) | | | |

(a) Concentrated load is considered placed at the support. Loads used are those stipulated for shear.
(b) Maximum value determined by Standard Truck Loading. Otherwise the Standard Lane Loading governs.

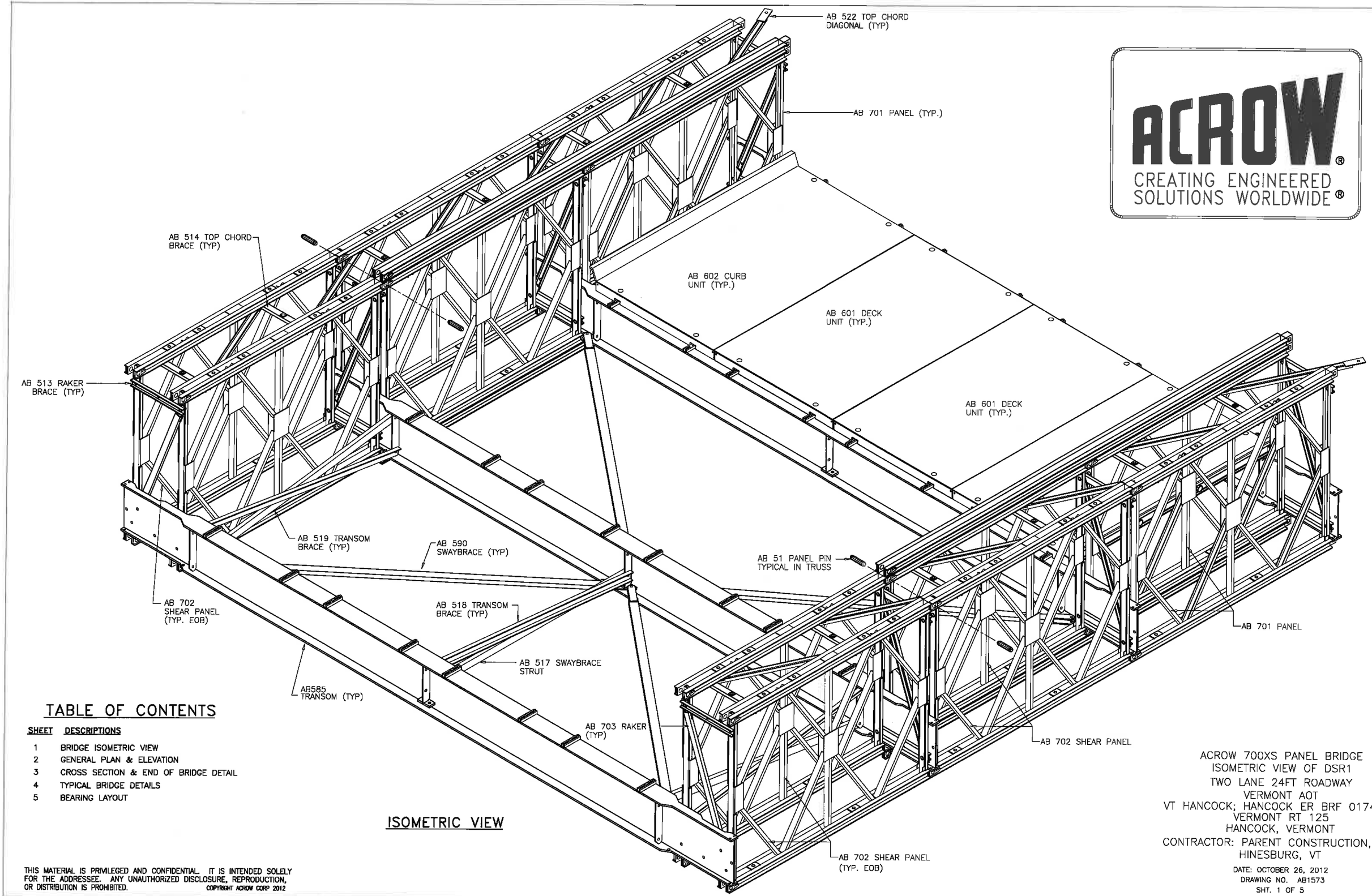


ACROW®
CREATING ENGINEERED SOLUTIONS WORLDWIDE®

## TABLE OF CONTENTS


| SHEET | DESCRIPTIONS |
|---|---|
| 1 | BRIDGE ISOMETRIC VIEW |
| 2 | GENERAL PLAN & ELEVATION |
| 3 | CROSS SECTION & END OF BRIDGE DETAIL |
| 4 | TYPICAL BRIDGE DETAILS |
| 5 | BEARING LAYOUT |


## ISOMETRIC VIEW

ACROW 700XS PANEL BRIDGE
ISOMETRIC VIEW OF DSR1
TWO LANE 24FT ROADWAY
VERMONT AOT
VT HANCOCK; HANCOCK ER BRF 0174(16)
VERMONT RT 125
HANCOCK, VERMONT
CONTRACTOR: PARENT CONSTRUCTION, INC.
HINESBURG, VT

DATE: OCTOBER 26, 2012
DRAWING NO. AB1573
SHT. 1 OF 5

THIS MATERIAL IS PRIVILEGED AND CONFIDENTIAL. IT IS INTENDED SOLELY FOR THE ADDRESSEE. ANY UNAUTHORIZED DISCLOSURE, REPRODUCTION, OR DISTRIBUTION IS PROHIBITED. COPYRIGHT ACROW CORP 2012

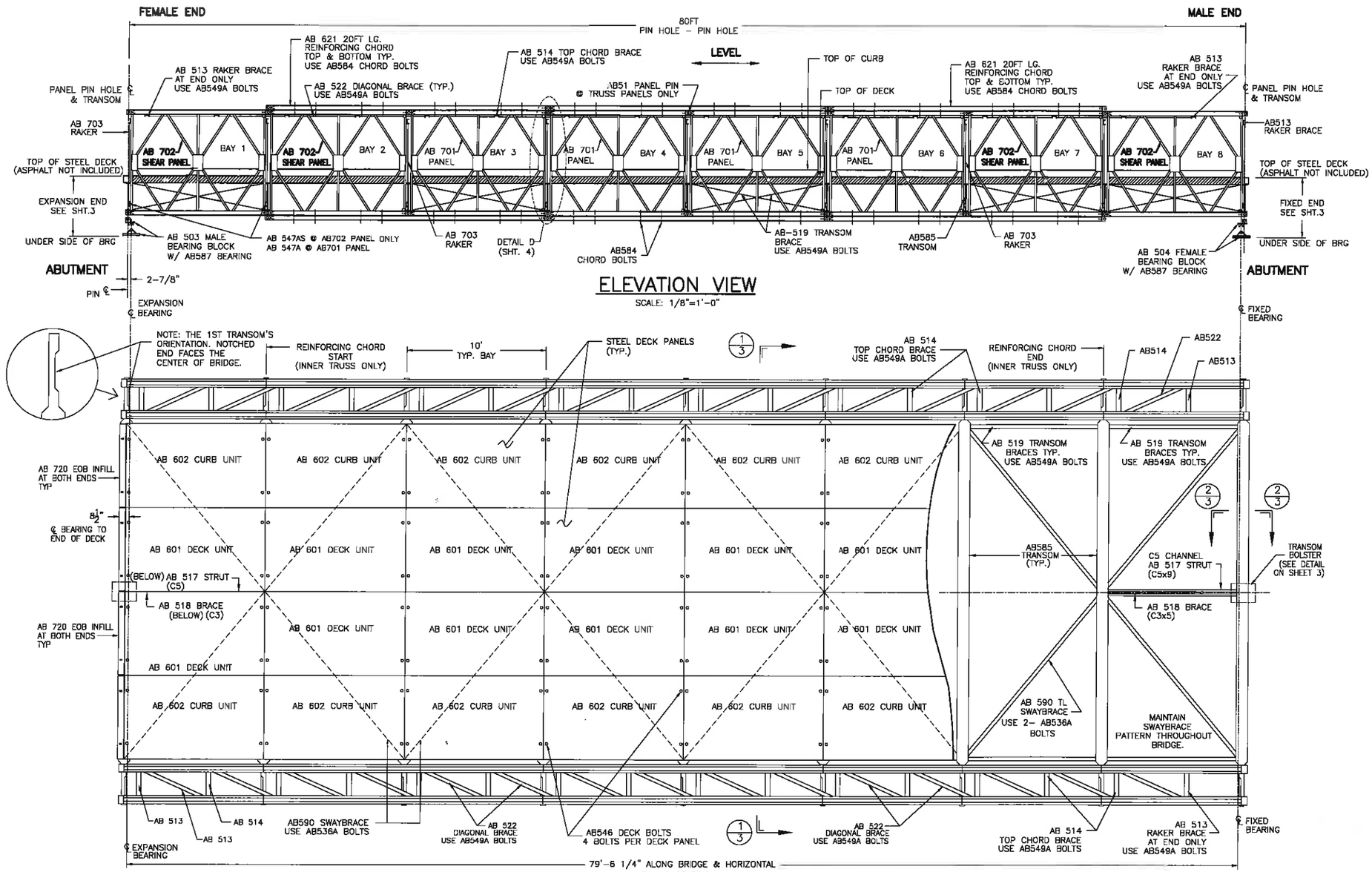


## ELEVATION VIEW

SCALE: 1/8"=1'-0"




## PLAN VIEW

| BRIDGE BOLTS | | | | |
|---|---|---|---|---|
| BOLT | NAME | DIA ø | UNDER HEAD LENGTH ±1/8" | TORQUE (FT/LBS) |
| AB549A | SHORT BRACE BOLT | 1" | 2–5/8" | 450 |
| AB548A | LONG RAKER BOLT | 1" | 3–7/8" | 450 |
| AB547AS | TRANSOM SHEAR BOLT | 1" | 5–1/2" | 450 |
| AB547A | TRANSOM BOLT | 1" | 4–1/8" | 450 |
| AB546 | DECK T BOLT | 3/4" | N/A | 110 |
| AB536A | BRACE BOLT | 1" | 3–3/8" | 450 |
| AB584 | CHORD BOLT | 1–1/4" | 3–1/2" | 650 |

### SHAPE OF DIAGONALS

AB701 PANELS – CHANNELS

AB702 PANELS – TUBES

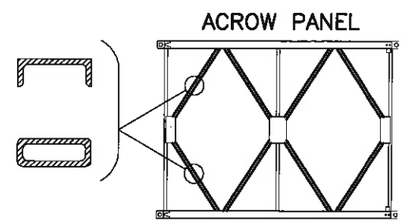


INFORMATION DISCLOSED HEREIN IS THE PROPERTY OF ACROW CORPORATION OF AMERICA. THIS MATERIAL IS PRIVILEGED AND CONFIDENTIAL. IT IS INTENDED SOLELY FOR THE ADDRESSEE. ANY UNAUTHORIZED DISCLOSURE, REPRODUCTION, OR DISTRIBUTION IS PROHIBITED. DUPLICATION OF ANY PORTION OF THIS DATA SHALL INCLUDE THIS LEGEND. COPYRIGHT ACROW CORP 2012

| REV. | DATE | DESCRIPTION | BY | APPR. |
|---|---|---|---|---|

SEAL

ACROW® CREATING ENGINEERED SOLUTIONS WORLDWIDE®
CORPORATION OF AMERICA
181 NEW ROAD, PARSIPPANY, NJ 07054

ACROW 700XS PANEL BRIDGE
PLAN & ELEVATION
80FT x 2 LANE 24FT DSR1 BRIDGE
VERMONT AOT
VT HANCOCK; HANCOCK ER BRF 0174(16)
VERMONT RT 125
HANCOCK, VT

DRAWN BY AC
CHECKED BY ZW
APPROVED BY SP
DATE OCTOBER 26, 2012
SCALE: AS SHOWN
CONTRACT NO.

PARENT CONSTRUCTION, INC.
HINESBURG, VT

DRAWING NO. AB1573
REV.
SHT 2 OF 5

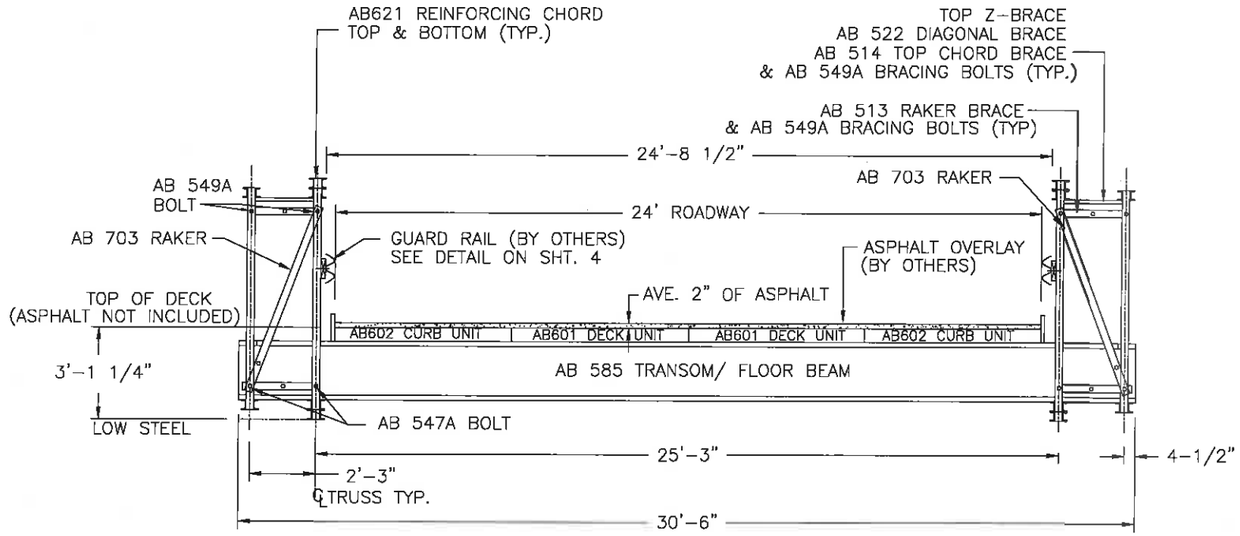


## SECTION 1/3 – 1/3

SCALE: 3/16"=1'-0"

## GENERAL NOTES

DESIGN SPECIFICATION
2002 AASHTO STANDARD SPECIFICATIONS 17TH EDITION FOR HIGHWAY BRIDGES AND CURRENT ADDENDUM'S

LIVE LOAD
AASHTO HS20-44

DEAD LOAD
2" ASPHALT OVERLAY (BY OTHERS)

BRIDGE
(A) PANEL CHORDS, DIAGONALS & VERTICALS, PANEL REINFORCING CHORDS, RAKER
AASHTO M223 Gd 65

(B) DECKING, RAKER BRACE, TRANSOM, DIAGONAL BRACE, CHORD BRACE, SWAYBRACE, TRANSOM BRACE
AASHTO M223 Gd 50

(C) PANEL PINS
ASTM A 193 Gd B7

(D) BOLTS
AASHTO M164M – A325

FINISH
ALL MAJOR COMPONENTS GALVANIZED TO AASHTO M111-ASTM A123
ALL BOLTS, ARE HOT DIPPED GALVANIZED.
PINS ARE ELECTRO GALVANIZED.

## DIAGRAMS OF PERMISSIBLE LIVE LOADS AASHTO HS-20

UNITS: US TONS & FEET

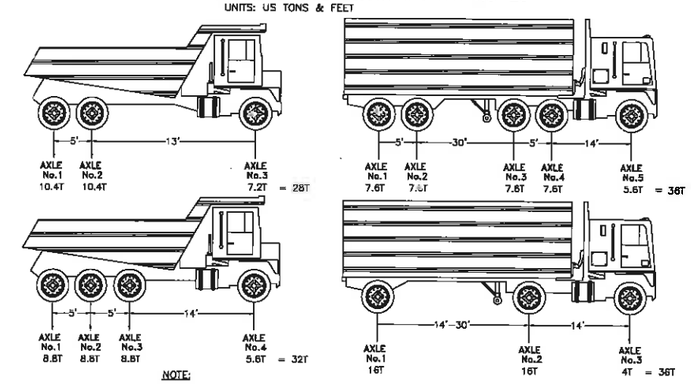


NOTE:
PERMIT VEHICLES ARE NOT TO USE BRIDGE UNLESS WRITTEN APPROVAL FROM ACROW HAS BEEN GIVEN. THE BRIDGE SHALL HAVE AT EACH END SIGNS INDICATING DIAGRAMATICALLY THE PERMISSABLE LIVE LOADS SHOWN ABOVE. IT SHOULD ALSO INDICATE THAT PERMIT VEHICLES ARE NOT ALLOWED.

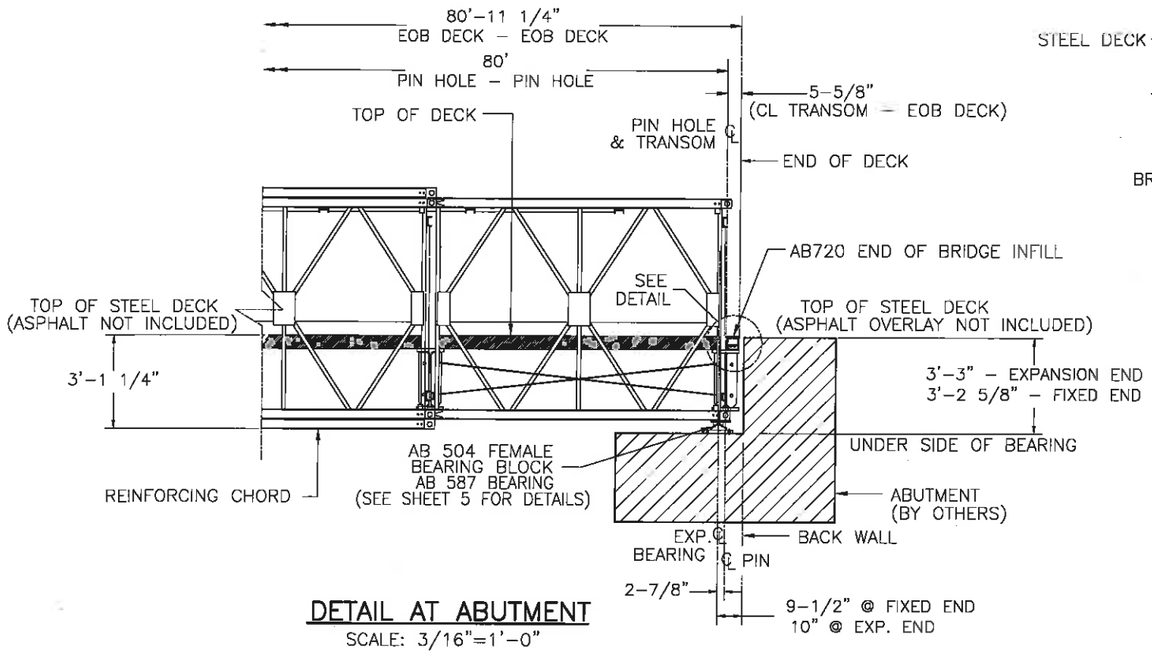


## DETAIL AT ABUTMENT

SCALE: 3/16"=1'-0"

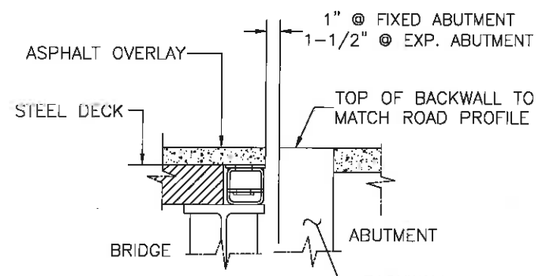


## DETAIL

NOTE:
INSTALL BOLSTER AFTER BRIDGE, DECK & OVERLAY IS IN PLACE

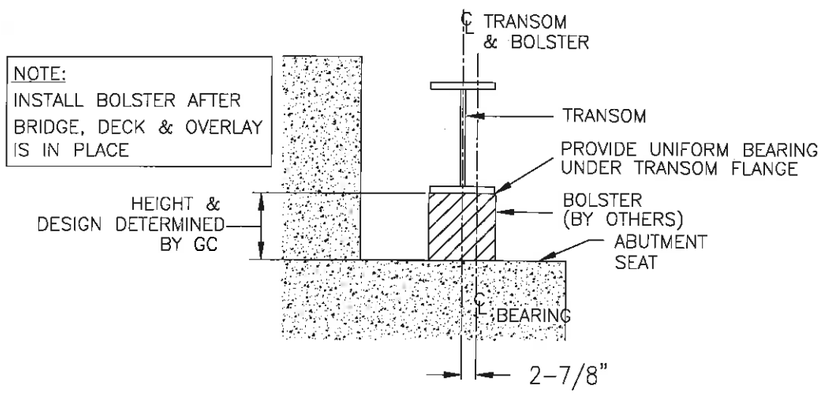


## BOLSTER DETAIL 2/3 – 2/3

SCALE: N.T.S.
SEE BEARING LAYOUT FOR LOCATION

NOTE:
- BOLSTER TO BE SECURED FROM MOVEMENT AFTER INSTALLATION
- BOLSTER TO MATCH SLOPE OF TRANSOM FLANGE

INFORMATION DISCLOSED HEREIN IS THE PROPERTY OF ACROW CORPORATION OF AMERICA. THIS MATERIAL IS PRIVILEGED AND CONFIDENTIAL. IT IS INTENDED SOLELY FOR THE ADDRESSEE. ANY UNAUTHORIZED DISCLOSURE, REPRODUCTION, OR DISTRIBUTION IS PROHIBITED. DUPLICATION OF ANY PORTION OF THIS DATA SHALL INCLUDE THIS LEGEND. COPYRIGHT ACROW CORP 2012

| REV. | DATE | DESCRIPTION | BY | APPR. |
|---|---|---|---|---|
| | | | | |

SEAL

ACROW® CREATING ENGINEERED SOLUTIONS WORLDWIDE®
CORPORATION OF AMERICA
181 NEW ROAD, PARSIPPANY, NJ 07054

ACROW 700XS PANEL BRIDGE
CROSS SECTION & END OF BRIDGE DETAILS
80FT x 2 LANE 24FT DSR1 BRIDGE
VERMONT AOT
VT HANCOCK; HANCOCK ER BRF 0174(16)
VERMONT RT 125
HANCOCK, VT

DRAWN BY AC
CHECKED BY ZW
APPROVED BY SP
DATE OCTOBER 26, 2012
SCALE: AS SHOWN
CONTRACT NO.

PARENT CONSTRUCTION, INC.
HINESBURG, VT

DRAWING NO. AB1573
REV.
SHT 3 OF 5

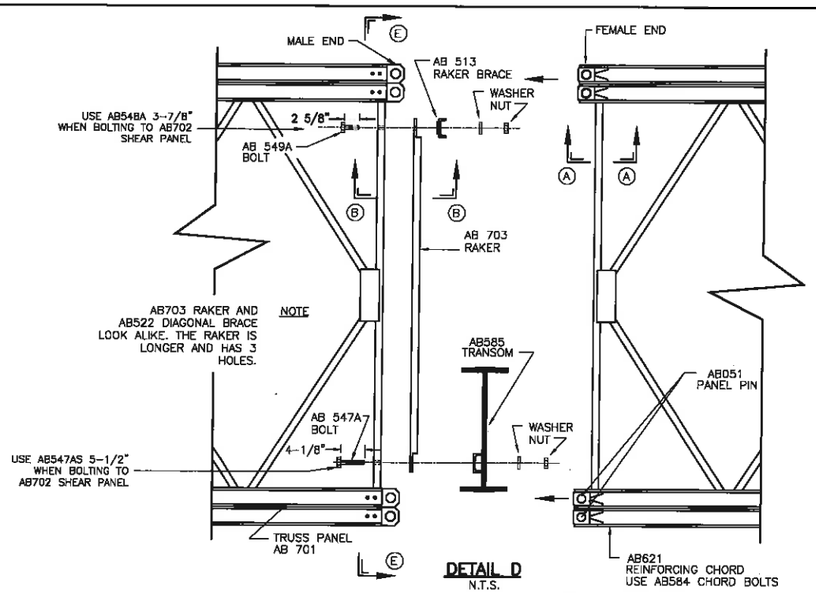


DETAIL D
N.T.S.

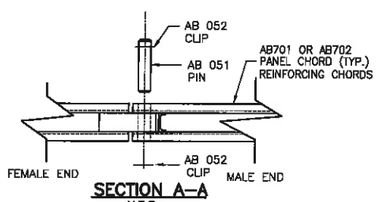


SECTION A–A
N.T.S.

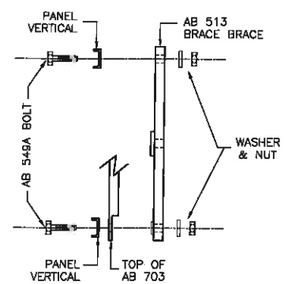


SECTION B–B
N.T.S.

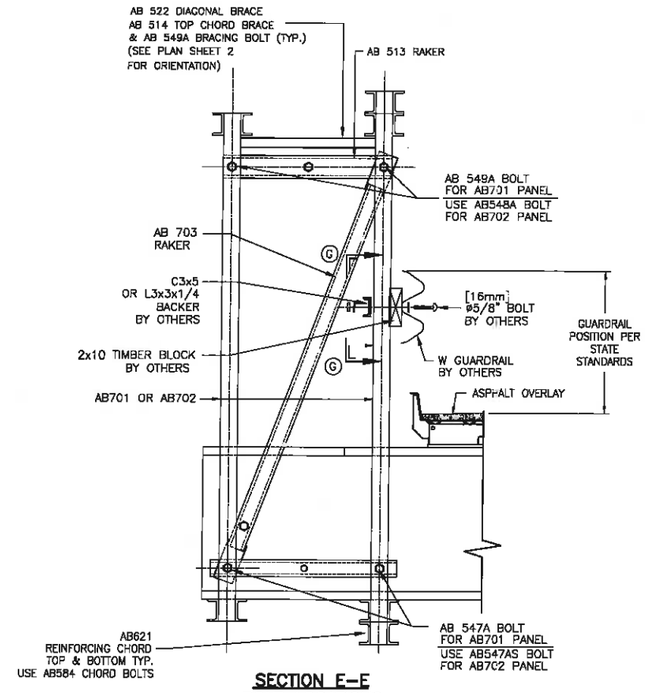


SECTION E–E
BOLT LOCATIONS
N.T.S.

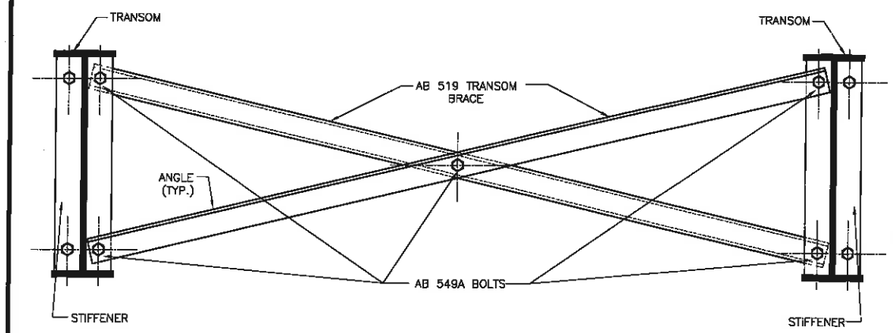


NOTE: THESE BRACES ARE BETWEEN EVERY OTHER PAIR OF TRANSOMS, (SEE ELEVATION SHEET 2 FOR LOCATIONS)

DETAIL – TRANSOM BRACES
N.T.S.

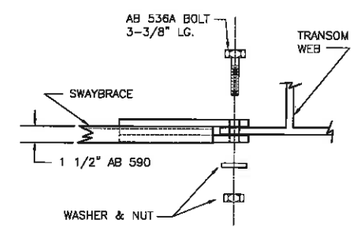


SECTION F–F
N.T.S.

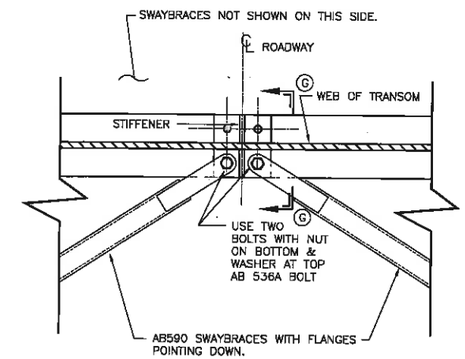


SWAYBRACE CENTER CONNECTION DETAIL
N.T.S.

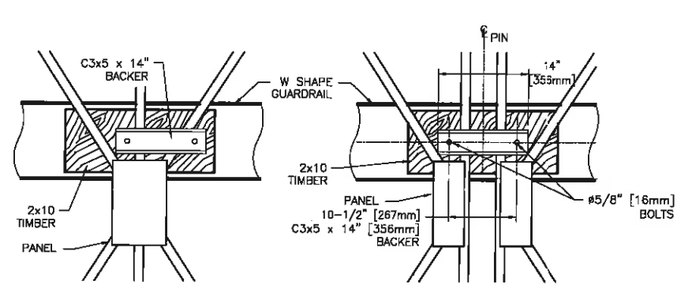


GUARDRAIL DETAIL @ PANEL MIDDLE
GUARDRAIL DETAIL @ PANEL PIN JOINT
SECTION G–G

NOTE:
ALL GUARDRAIL MATERIAL BY OTHERS.

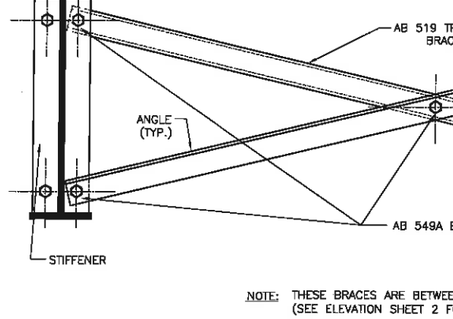


SWAYBRACE END CONNECTION DETAIL
N.T.S.




SECTION G–G
SWAYBRACE CONNECTION DETAIL AT CENTER POINT
N.T.S.

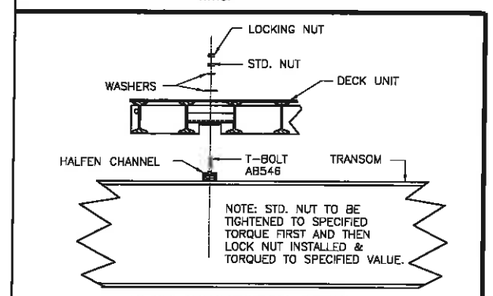


DECK CONNECTION DETAIL
N.T.S.

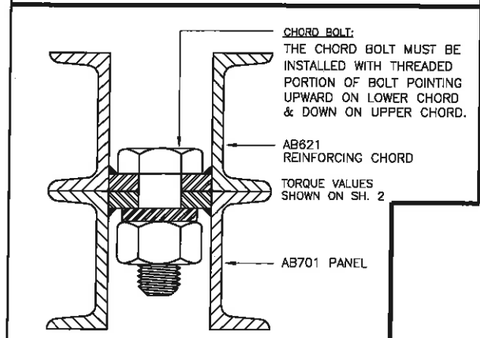


CHORD BOLT CONNECTION DETAIL
SCALE: N.T.S.

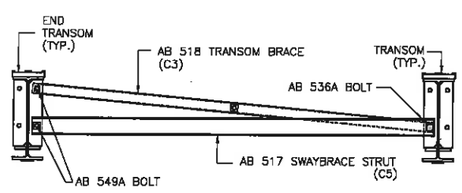


FIRST & LAST BAY BRACING DETAIL
(CENTER OF TRANSOM)

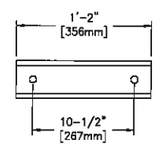


C3x5 BACKER
BY OTHERS

INFORMATION DISCLOSED HEREIN IS THE PROPERTY OF ACROW CORPORATION OF AMERICA. THIS MATERIAL IS PRIVILEGED AND CONFIDENTIAL. IT IS INTENDED SOLELY FOR THE ADDRESSEE. ANY UNAUTHORIZED DISCLOSURE, REPRODUCTION, OR DISTRIBUTION IS PROHIBITED. DUPLICATION OF ANY PORTION OF THIS DATA SHALL INCLUDE THIS LEGEND. COPYRIGHT ACROW CORP 2012

| REV. | DATE | DESCRIPTION | BY | APPR. |
|---|---|---|---|---|
| | | | | |

SEAL

ACROW®
CREATING ENGINEERED SOLUTIONS WORLDWIDE®
CORPORATION OF AMERICA
181 NEW ROAD, PARSIPPANY, NJ 07054

ACROW 700XS PANEL BRIDGE
TYPICAL BRIDGE DETAILS
80FT x 2 LANE 24FT DSR1 BRIDGE
VERMONT AOT
VT HANCOCK; HANCOCK ER BRF 0174(16)
VERMONT RT 125
HANCOCK, VT

| | | | |
|---|---|---|---|
| DRAWN BY AC | DATE OCTOBER 26, 2012 | CONTRACT NO. | |
| CHECKED BY ZW | SCALE: AS SHOWN | | |
| APPROVED BY SP | | | |
| PARENT CONSTRUCTION, INC. HINESBURG, VT | DRAWING NO. AB1573 | REV. | |
| | SHT 4 OF 5 | | |

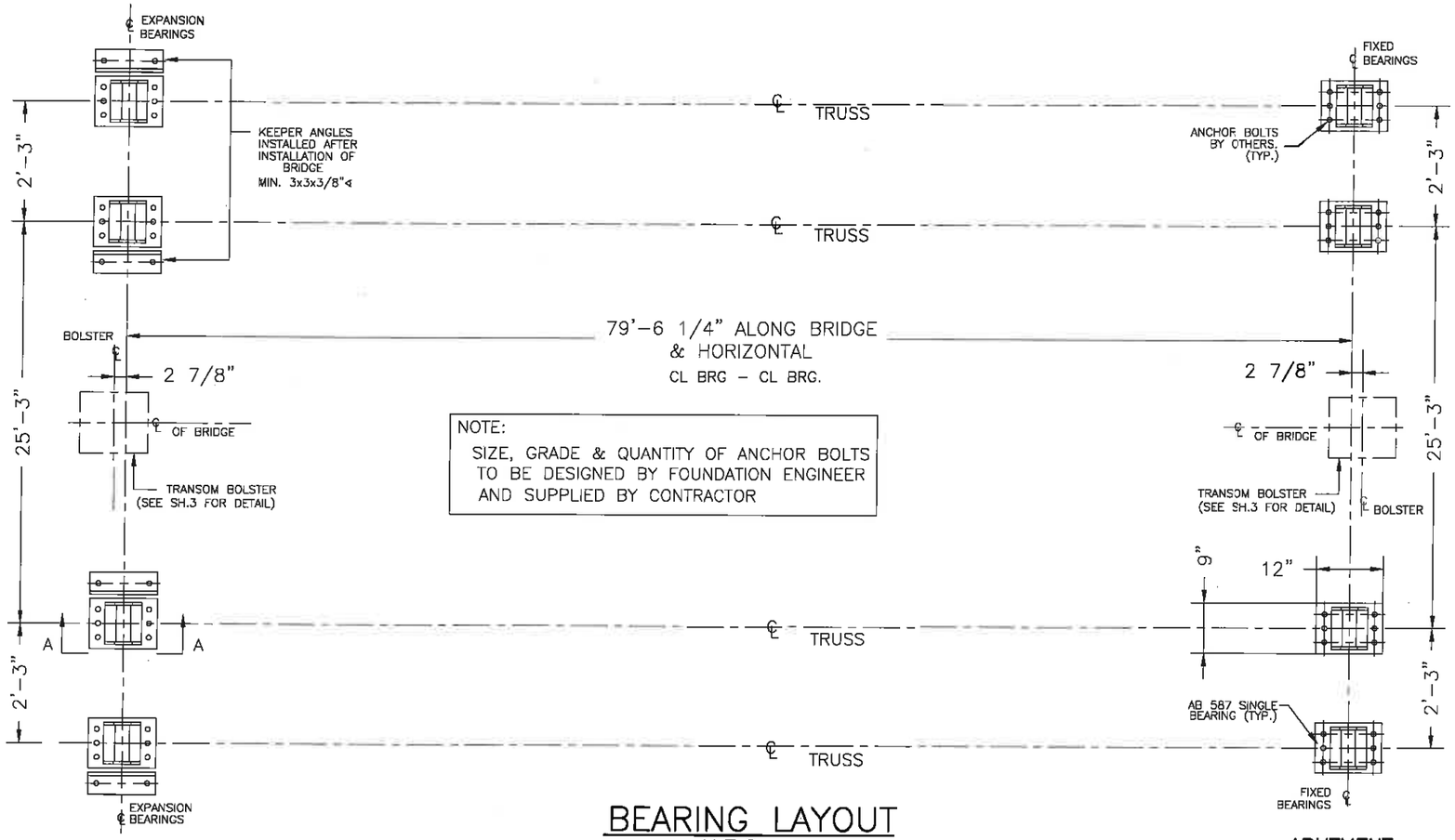


NOTE:
SIZE, GRADE & QUANTITY OF ANCHOR BOLTS TO BE DESIGNED BY FOUNDATION ENGINEER AND SUPPLIED BY CONTRACTOR

ABUTMENT

ABUTMENT

## BEARING LAYOUT
N.T.S.

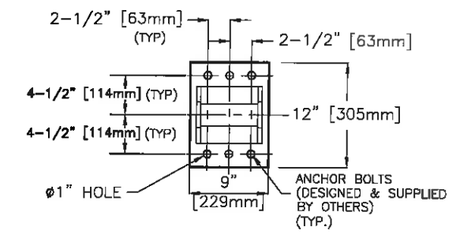


**FIXED END - BEARING DETAIL**
SCALE: N.T.S.

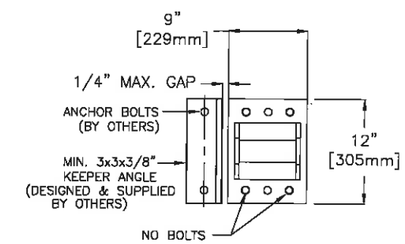


**EXPANSION END - BEARING DETAIL**
SCALE: N.T.S.

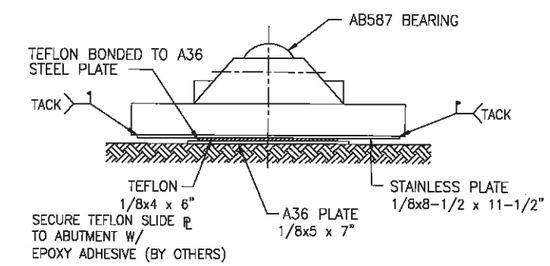


**EXPANSION BEARING ELEVATION VIEW A-A**
ANGLE NOT SHOWN FOR CLARITY

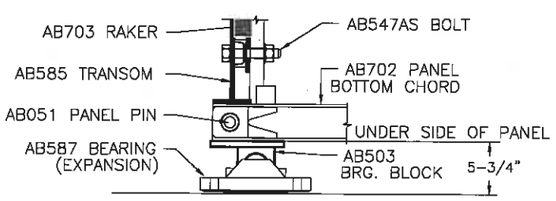


**DETAIL AT FEMALE END OF BRIDGE**

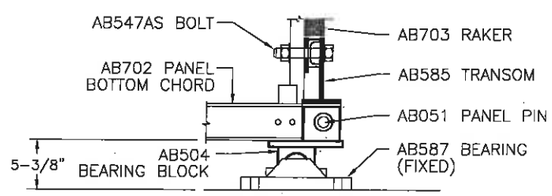


**DETAIL AT MALE END OF BRIDGE**

INFORMATION DISCLOSED HEREIN IS THE PROPERTY OF ACROW CORPORATION OF AMERICA. THIS MATERIAL IS PRIVILEGED AND CONFIDENTIAL. IT IS INTENDED SOLELY FOR THE ADDRESSEE. ANY UNAUTHORIZED DISCLOSURE, REPRODUCTION, OR DISTRIBUTION IS PROHIBITED. DUPLICATION OF ANY PORTION OF THIS DATA SHALL INCLUDE THIS LEGEND. COPYRIGHT ACROW CORP 2012

| REV. | DATE | DESCRIPTION | BY | APPR. |
|---|---|---|---|---|
| | | | | |

SEAL

ACROW®
CREATING ENGINEERED SOLUTIONS WORLDWIDE®
CORPORATION OF AMERICA
181 NEW ROAD, PARSIPPANY, NJ 07054

ACROW 700XS PANEL BRIDGE
BEARING LAYOUT
80FT x 2 LANE 24FT DSR1 BRIDGE
VERMONT AOT
VT HANCOCK; HANCOCK ER BRF 0174(16)
VERMONT RT 125
HANCOCK, VT

DRAWN BY AC
CHECKED BY ZW
APPROVED BY SP
DATE OCTOBER 26, 2012
SCALE: AS SHOWN
CONTRACT NO.

PARENT CONSTRUCTION, INC.
HINESBURG, VT

DRAWING NO. AB1573
REV.
SHT 5 OF 5