CCS Constructors LLC

Supply & Erect Structural Steel and Precast
Crane Service Rigging Pile Driving Heavy Hauling

Erection Plan for Precast Concrete NEXT BEAMS
Hancock, VT
ER BRF 0174(16)

June 10, 2013

General Requirements:

The erection shall not be performed during windy or heavy rain conditions. A Link Belt 298 HSL Crawler Crane will be used for the erection.

The units shall be picked from the locations and lifting apparatus shown in the J.P. Carrara & Sons Inc. shop drawings, and shall be installed according to the manufacturer's requirements and project specifications . Each Next Beam unit is to be picked from (4) locations. See the attached isometric drawing for rigging sizes, which are minimum; slightly larger rigging is permissible.

The maximum permissible crane radius for unloading and setting the Next Beam units is shown on layout drawing, and shall not be exceeded. The unloading area is to be behind the crane.

Crane track bearing pressures are shown herein. The crane shall setup on steel plates or hardwood crane mats. See the attached layout drawing for crane setup location information and additional requirements. The sub-base beneath the crane shall be compacted structural backfill. The steel plates or crane mats shall be no more than 16" above the Next Beam bearing seats, and may be set at a lower elevation.

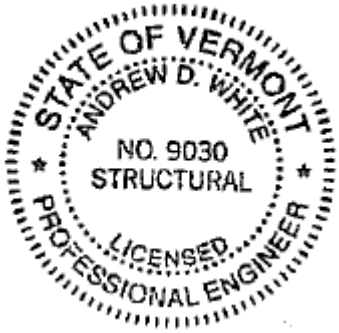

Andrew D. White, P.E.
June 10, 2013

138 Munson Avenue Morrisville, VT 05661
802–888–7701 fax 802–888–4746

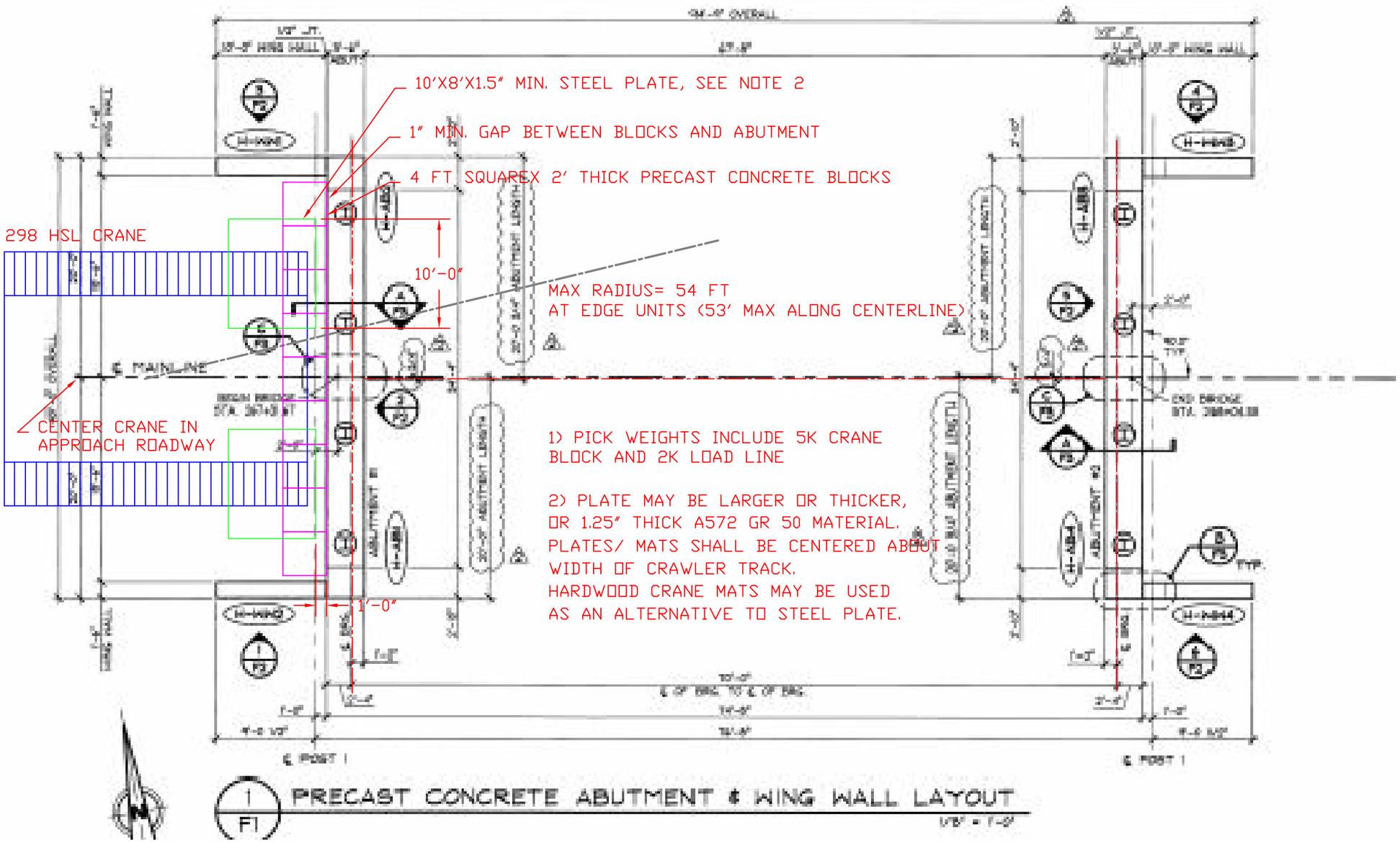

STATE OF VERMONT
ANDREW D. WHITE
NO. 9030
STRUCTURAL
LICENSED
PROFESSIONAL ENGINEER

ANDREW D. WHITE
6/10/13

CCS CONSTRUCTORS, LLC
138 MUNSON AVE.
MORRISVILLE, VT 05661
PH. 802-888-7701
FX. 802-888-4746

PROJECT NAME	PROJECT NO.
HANCOCK	ER BRF0174(16)
CRANE LAYOUT	DRAWING NO. 1
SCALE 1"=10' DATE 6/10/13	

CRANE

Link-Belt 298 HSL

140' Main Boom (Open Throat Tube Boom) at 70.7°

Base: Blocked Crawlers

Counterweight: ABCDE+A

52' Lift Radius (Over End)

Crane Capacity at 52' = 118,500 lbs

LOAD

Hoist Line	2,300 lbs
Block	5,000 lbs
Hook	
Sling (4)	
Rigging	1,000 lbs
Load	105,000 lbs
TOTAL LOAD	**113,500 lbs**

95% of capacity

Each Sling Tension: 29,199 lbs

54 ft max radius

STATE OF VERMONT
ANDREW D. WHITE
NO. 9030
STRUCTURAL
LICENSED
PROFESSIONAL ENGINEER

Andrew D. White, P.E.
June 10, 2013

Four (4) 90 k round slings x 40' long
Four (4) 53 k round slings x 40' long
Eight (8) 35 Ton screw type shackles
to connect the slings together at the link
for forming 80' long rigging, spanning from
the crane hook to the Next Beam lifter pick
points
Four (4) 25 Ton Shackles to attach to Next Beam
Lifters

IMPORTANT: ALL KEVLAR SLINGS SHALL BEAR IN THE BOW OF THE SHACKLES, NOT ON THE PINS

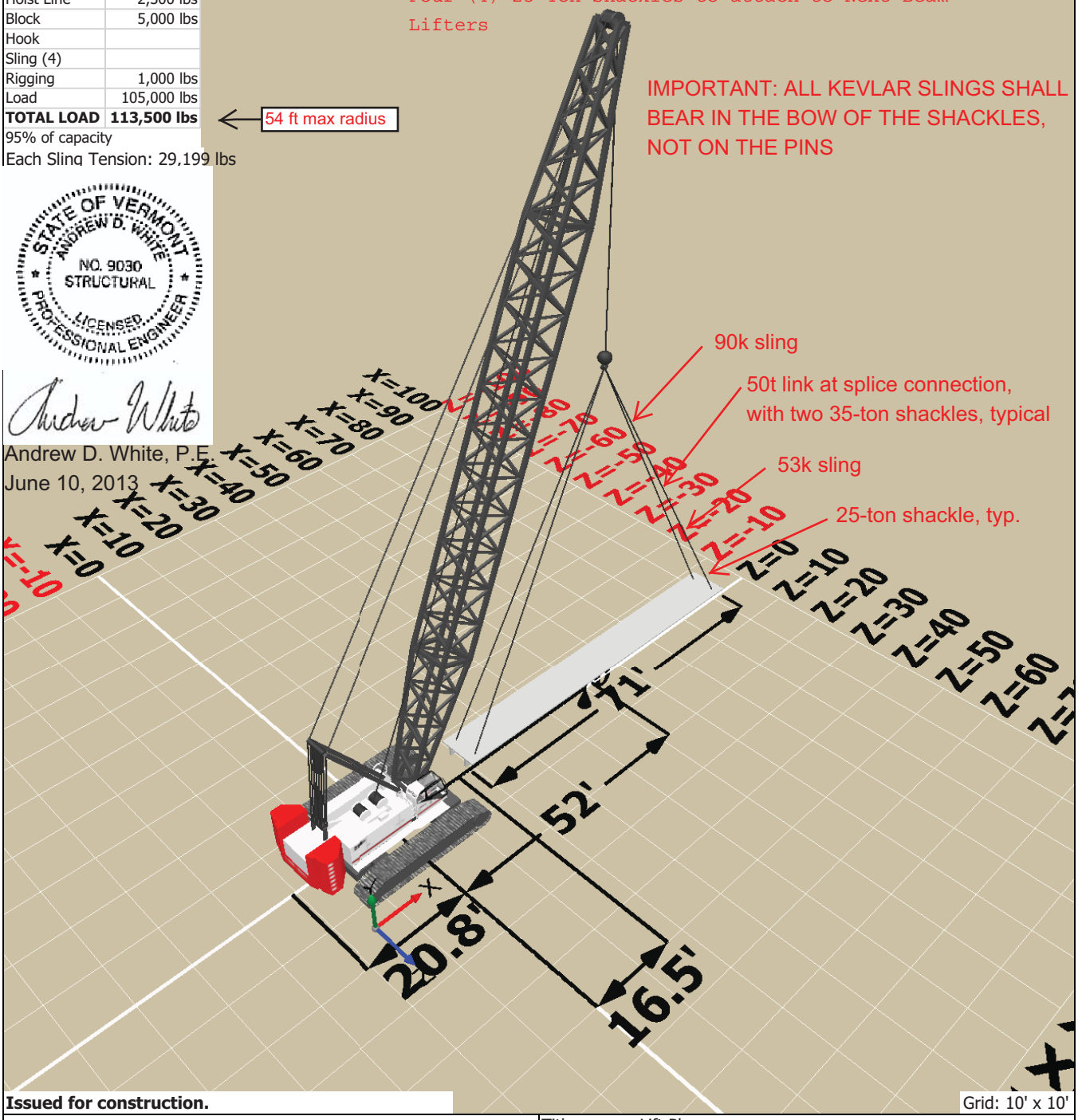

Issued for construction.

Grid: 10' x 10'

Title:	Lift Plan
Project:	Hancock Next Beam Erection
Customer:	Parent Construction
Description:	Lift Plan
Drawn By:	Sam Davis 6/6/2013

298 HSL

Main Boom Capacities - 140 Ft Open Throat Tube Boom							
		Over End Blocked	360 Degree Rotation				
Load Radius (ft)	Boom Angle (deg)	ABCDE+A CURVE 1	ABCDE+A CURVE 2	ABCD+A CURVE 3	ABC+A CURVE 4	AB+A CURVE 5	Load Radius (ft)
23.94	82.0	277,800	277,800	277,800	269,700	243,000	23.94
25	81.6	274,300	274,300	269,600	257,500	225,500	25
30	79.5	228,800	228,800	215,600	191,500	167,400	30
35	77.4	190,300	190,300	171,000	151,700	132,400	35
40	75.3	160,800	157,300	141,200	125,100	109,000	40
41	**74.9**	**157,000**	**153,100**	**137,400**	**121,700**	**106,000**	**41**
42	**74.4**	**153,300**	**149,000**	**133,700**	**118,400**	**103,100**	**42**
43	**74.0**	**149,600**	**144,900**	**130,000**	**115,100**	**100,200**	**43**
44	**73.6**	**145,900**	**140,700**	**126,200**	**111,700**	**97,200**	**44**
45	**73.2**	**142,200**	**136,600**	**122,500**	**108,400**	**94,300**	**45**
46	**72.7**	**138,400**	**132,500**	**118,800**	**105,100**	**91,400**	**46**
47	**72.3**	**134,700**	**128,300**	**115,000**	**101,700**	**88,400**	**47**
48	**71.9**	**131,000**	**124,200**	**111,300**	**98,400**	**85,500**	**48**
49	**71.4**	**127,300**	**120,100**	**107,600**	**95,100**	**82,600**	**49**
50	71.0	123,600	116,000	103,900	91,800	79,700	50
51	**70.6**	**121,000**	**113,500**	**101,600**	**89,700**	**77,900**	**51**
52	**70.1**	**118,500**	**111,000**	**99,400**	**87,700**	**76,100**	**52**
53	**69.7**	**116,000**	**108,500**	**97,100**	**85,700**	**74,300**	**53**
54	**69.2**	**113,500**	**106,000**	**94,900**	**83,700**	**72,600**	**54**
55	**68.8**	**111,000**	**103,500**	**92,600**	**81,700**	**70,800**	**55**
56	**68.4**	**108,500**	**101,000**	**90,400**	**79,700**	**69,000**	**56**
57	**67.9**	**106,000**	**98,500**	**88,100**	**77,700**	**67,300**	**57**
58	**67.5**	**103,500**	**96,000**	**85,900**	**75,700**	**65,500**	**58**
59	**67.0**	**101,000**	**93,500**	**83,600**	**73,700**	**63,700**	**59**
60	66.6	98,500	91,100	81,400	71,700	62,000	60
70	62.1	82,700	74,400	66,400	58,300	50,200	70
80	57.3	69,700	62,500	55,600	48,700	41,800	80
90	52.3	59,800	53,600	47,500	41,500	35,400	90
100	47.0	52,000	46,600	41,200	35,800	30,400	100
110	41.1	46,900	41,000	36,200	31,300	26,400	110
120	34.4	41,100	36,400	32,000	27,600	23,200	120
130	26.3	36,200	32,500	28,500	24,400	20,400	130
136.02	20.0	33,400	30,500	26,600	22,800	18,900	136.02

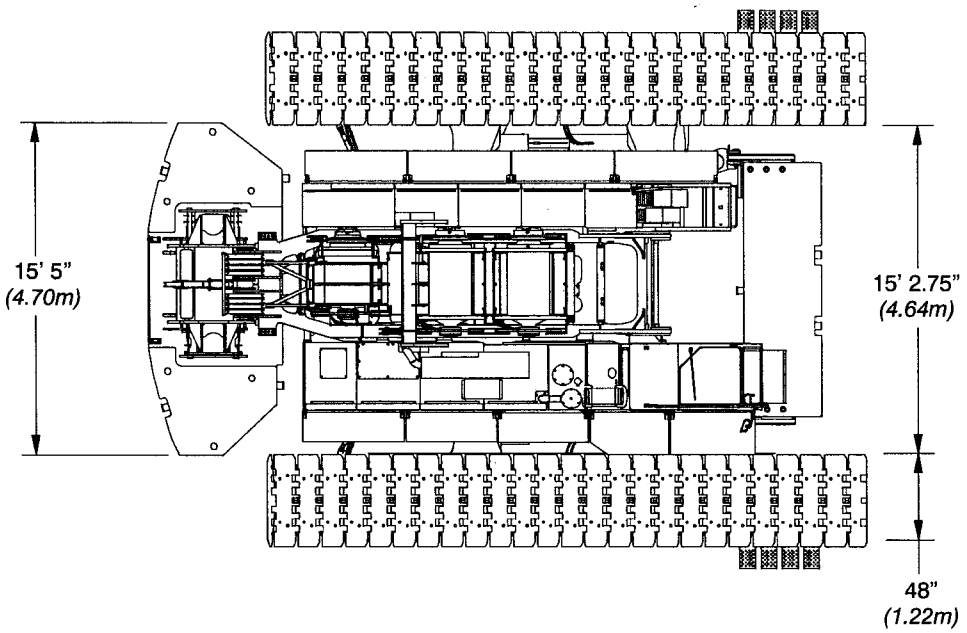
15' 5"
(4.70m)
15' 2.75"
(4.64m)
48"
(1.22m)

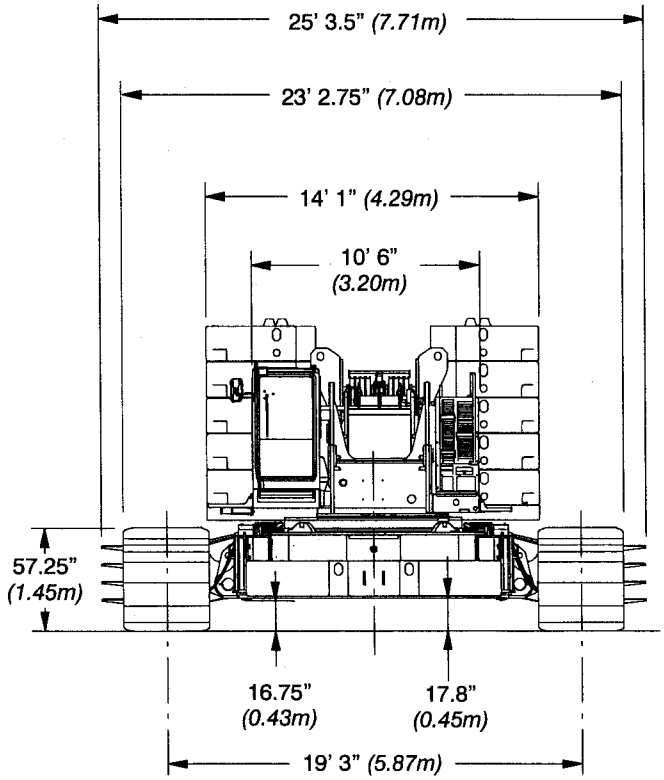
25' 3.5" (7.71m)
23' 2.75" (7.08m)
14' 1" (4.29m)
10' 6"
(3.20m)
57.25"
(1.45m)
16.75"
(0.43m)
17.8"
(0.45m)
19' 3" (5.87m)

Base Crane

Base Crane ❶

Width	10 ft 2.25 in	*(3.10m)*
Height*	45 in	*(1.14m)*
Weight	88,000 lb	*(39 917kg)*

* Maximum height on pontoons

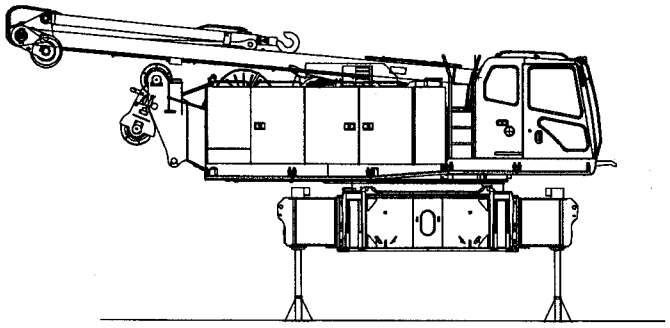

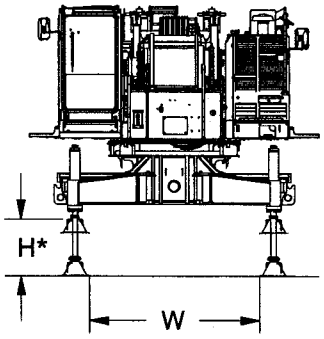

Side Frames

Side Frames ❷

Length	27 ft 9 in	*(8.46m)*
Width	48 in	*(1.22m)*
Height	57.25 in	*(1.45m)*
Weight	41,446 lb	*(18 800kg)*

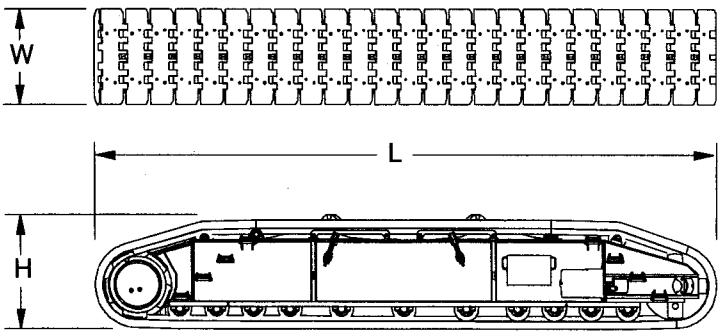

Number inside black circle "❶" = # of components

Eye & Eye-Flat
EEF – Type 3

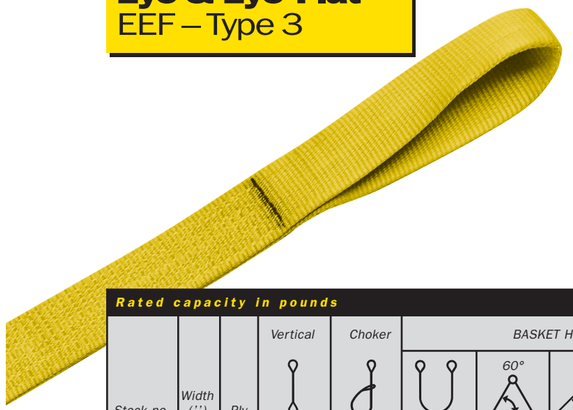

Eye & Eye-Twist
EET – Type 4

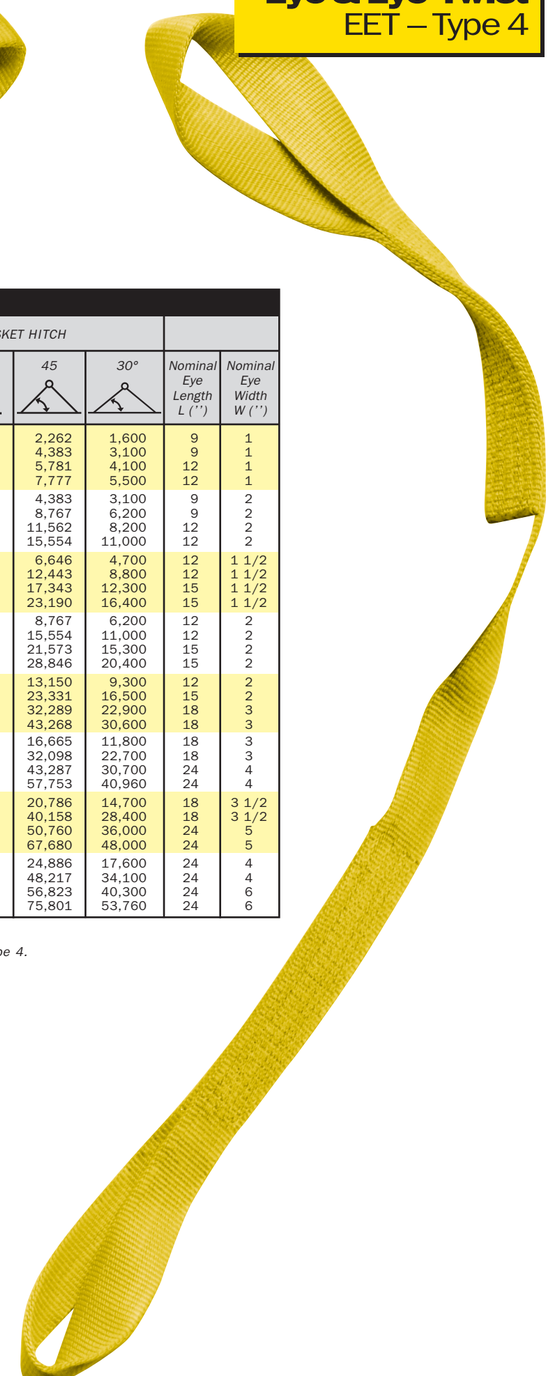

Rated capacity in pounds

Stock no.	Width (”)	Ply	Vertical	Choker	BASKET HITCH				Nominal Eye Length L (”)	Nominal Eye Width W (”)
						60°	45	30°		
-1-901	1	1	1,600	1,280	3,200	2,771	2,262	1,600	9	1
-2-901	1	2	3,100	2,480	6,200	5,369	4,383	3,100	9	1
-3-901	1	3	4,100	3,300	8,200	7,052	5,781	4,100	12	1
-4-901	1	4	5,500	4,400	11,000	9,526	7,777	5,500	12	1
-1-902	2	1	3,100	2,480	6,200	5,369	4,383	3,100	9	2
-2-902	2	2	6,200	4,960	12,400	10,738	8,767	6,200	9	2
-3-902	2	3	8,200	6,600	16,400	14,104	11,562	8,200	12	2
-4-902	2	4	11,000	8,800	22,000	19,052	15,554	11,000	12	2
-1-903	3	1	4,700	3,760	9,400	8,140	6,646	4,700	12	1 1/2
-2-903	3	2	8,800	7,040	17,600	15,242	12,443	8,800	12	1 1/2
-3-903	3	3	12,300	9,900	24,600	21,156	17,343	12,300	15	1 1/2
-4-903	3	4	16,400	13,120	32,800	28,405	23,190	16,400	15	1 1/2
-1-904	4	1	6,200	4,960	12,400	10,738	8,767	6,200	12	2
-2-904	4	2	11,000	8,800	22,000	19,052	15,554	11,000	12	2
-3-904	4	3	15,300	12,200	30,600	26,316	21,573	15,300	15	2
-4-904	4	4	20,400	16,320	40,800	35,333	28,846	20,400	15	2
-1-906	6	1	9,300	7,440	18,600	16,108	13,150	9,300	12	2
-2-906	6	2	16,500	13,200	33,000	28,578	23,331	16,500	15	2
-3-906	6	3	22,900	18,300	45,800	39,388	32,289	22,900	18	3
-4-906	6	4	30,600	24,480	61,200	52,999	43,268	30,600	18	3
-1-908	8	1	11,800	9,440	23,600	20,438	16,665	11,800	18	3
-2-908	8	2	22,700	18,160	45,400	39,316	32,098	22,700	18	3
-3-908	8	3	30,700	24,600	61,400	52,804	43,287	30,700	24	4
-4-908	8	4	40,960	32,768	81,920	70,451	57,753	40,960	24	4
-1-910	10	1	14,700	11,760	29,400	25,460	20,786	14,700	18	3 1/2
-2-910	10	2	28,400	22,720	56,800	49,189	40,158	28,400	18	3 1/2
-3-910	10	3	36,000	28,800	72,000	61,920	50,760	36,000	24	5
-4-910	10	4	48,000	38,400	96,000	82,560	67,680	48,000	24	5
-1-912	12	1	17,600	14,080	35,200	30,483	24,886	17,600	24	4
-2-912	12	2	34,100	27,280	68,200	59,061	48,217	34,100	24	4
-3-912	12	3	40,300	32,200	80,600	69,316	56,823	40,300	24	6
-4-912	12	4	53,760	43,008	107,520	92,467	75,801	53,760	24	6

Lighter duty “60” capacities available upon request.
** Insert EEF prefix to indicate Type 3 and EET prefix to indicate Type 4.*
See page 16 to see Types 3 and 4 light-duty slings.
Warning: Horizontal sling angles less than 30° shall not be used.

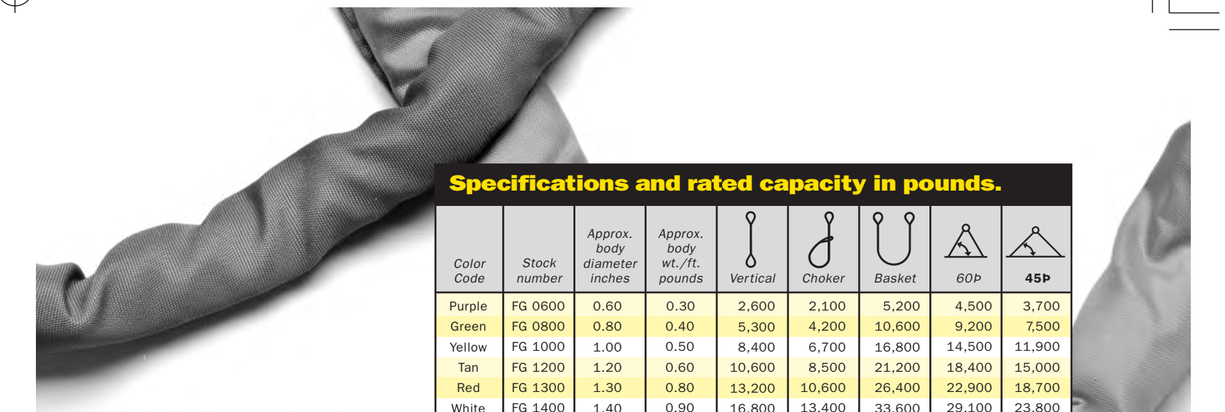

Specifications and rated capacity in pounds.

Color Code	Stock number	Approx. body diameter inches	Approx. body wt./ft. pounds	Vertical	Choker	Basket	60Þ	45Þ
Purple	FG 0600	0.60	0.30	2,600	2,100	5,200	4,500	3,700
Green	FG 0800	0.80	0.40	5,300	4,200	10,600	9,200	7,500
Yellow	FG 1000	1.00	0.50	8,400	6,700	16,800	14,500	11,900
Tan	FG 1200	1.20	0.60	10,600	8,500	21,200	18,400	15,000
Red	FG 1300	1.30	0.80	13,200	10,600	26,400	22,900	18,700
White	FG 1400	1.40	0.90	16,800	13,400	33,600	29,100	23,800
Blue	FG 1550	1.55	1.20	21,200	17,000	42,400	36,700	30,000
Orange	FG 1750	1.75	1.50	25,000	20,000	50,000	43,300	35,400
Orange	FG 1950	1.95	2.00	31,000	24,800	62,000	53,700	43,800
Black	FG 2350	2.35	2.80	40,000	32,000	80,000	69,300	56,600
Black	FG 3150	3.15	3.60	53,000	42,400	106,000	91,800	74,900
Black	FG 3950	3.95	4.60	66,000	52,800	132,000	114,300	93,300
Black	FG 4800	4.80	5.80	90,000	72,000	180,000	155,900	127,300

Rated capacities are based on current proposal for B30.9-6.
Warning: Horizontal sling angles less than 30° shall not be used.

Match the color to your lifting needs.

The jackets of Flexi-grip slings are color-coded by rated capacity. Choose from nine different colors to fit the rated capacity you need for your lift (see chart). Each sling also features a durable identification tag to indicate its size, type and rated capacity for your convenience.

Flexi-grip options.

Flexi-grip slings are also available in three configurations:

- *Endless-type slings that double the lifting legs in every application.*
- *Multi-leg bridles.*
- *Eye and eye slings formed by enclosing the body of an endless sling in a tubular jacket for extra protection and durability.*

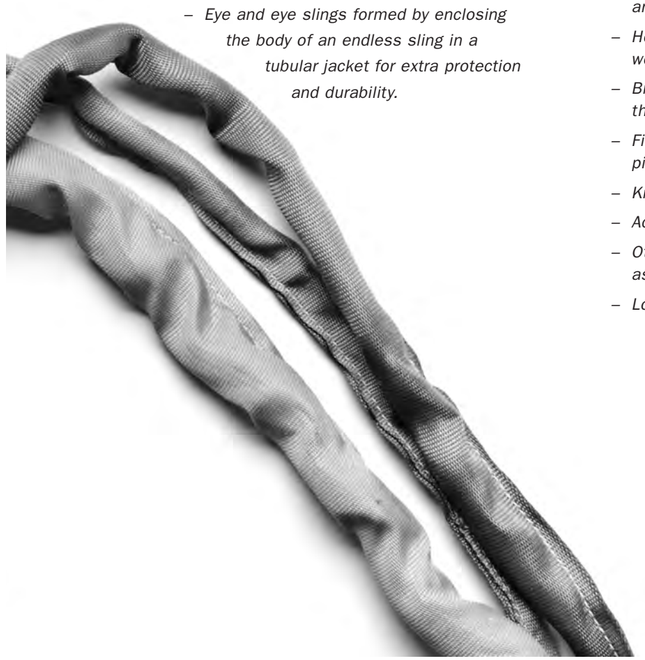

Moveable wear pads made with durable polyester buffer or leather are also available to help protect against lifting hooks and corners of loads.

Inspect your slings regularly.

Before each lift, visually inspect your Flexi-grip sling for any damage. Remove sling from service if you see:

- *Missing or illegible identification tag.*
- *Melting, charring or weld spatter on any part of the sling.*
- *Holes, tears, cuts, embedded particles, abrasive wear or snags that expose the sling’s core yarns.*
- *Broken or worn stitching in the cover that exposes the core yarns.*
- *Fittings that are damaged, stretched, cracked, pitted or distorted in any way.*
- *Knotting in the sling.*
- *Acid or alkali burns.*
- *Other visible damage that causes doubt as to the sling’s strength.*
- *Loading a sling beyond its rated capacity.*

How to order: Page 26

Link-Belt Constructon Equipment Co., Lexington, Kentucky - 298 HSL Unit: **English**

Model 298 HSL Lattice Boom w/ ABCDE+A CTWT w/ 68" X 80" OT Boom w/ 48" shoes	
113000 lb load @ **52** ft radius, pick from **Boom**	**140** ft main boom
70.1° boom angle	
524,526 lb gross vehicle weight (GVW)	Date: **6/10/2013** - v1.0

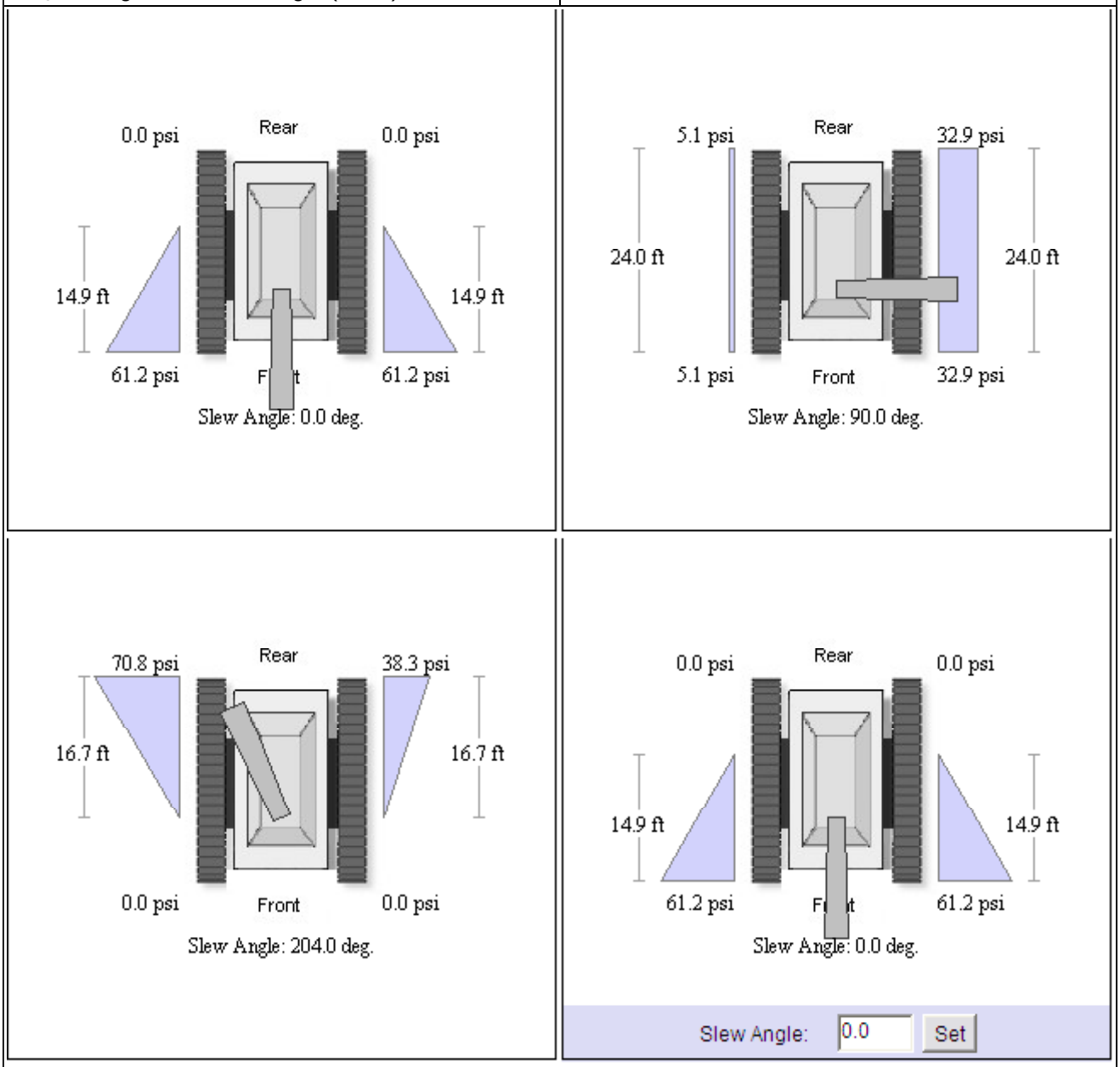

Slew Angle For Max Ground Bearing Pressure | Click & Drag the Boom or Input Slew Angle

CAUTION: DO NOT USE FOR CAPACITIES!

User to consult the crane rating manual or capacity plate supplied with the machine for input values used in these ground bearing reaction calculations. Do not exceed allowable lifting capacities for configured machine setup.

<- Go Back

Print this page

Hancock, VT
ER BRF 0174(16)

Crane Bearing Calc:

max crane pressure	61.2	psi	from crane pressure software
	8812.8	psf	convert to psf
track width	4	ft	
load at front edge	35251.2	lb	for entire track
allowable soil pressure	4000	psf	
required effective width	8.8128	ft	must be less than 14 ft
length of pressure	14.9	ft	from crane pressure software
gradiant	591.46	psf/ft	
point of 4000 psf	8.1	ft	min. required plate width
pressure at 3' back	7038.4	psf	
ave. pressure	7925.6	psf on block without plate	
trial plate width	10.0	ft	
applied ave. pressure under PL	3170.2	psf	
PL bending Moment	14266.1	ft-lbs	
PL thickness	1.00	in	
Z	3.0	in^3	
Fy	36.0	ksi	
phi	0.9		
phi*Mn	97.2	in-k	
	8100.0	ft-lbs	
load factor	1.1		accounts for plate friction
factored moment	15692.7	ft-lbs	Ok
			USE 2 LAYERS OF 1" PLATE