MONOKO, LLC

1037 Peninsula Avenue
Tarpon Springs, FL 34689-2125
E-mail Address: MonokoLLC@aol.com

(727) 940-3244
(727) 279-8795 Fax

Submittal No.: 05d revised: Traffic Control Plan additions revised

Date: September 9, 2016

Vermont Department of Transportation
Southeast Regional Construction Office
Attn: Ann Gammell, P.E., Regional Construction Engineer
PO Box 1873; 61 Depot Street
Wilder, VT 05088-1873
(802) 522-5719; (802) 281-5000; (802) 281-5002 fax
Ann.Gammell@Vermont.gov

Description: Proposal/Contract Number**:** Windsor-Hartford IM BPNT (13)
Letting Date: 10/09/15; Award Date: 11/02/15
Project Description: Bridge Painting of Eleven Bridges
In the Towns of Windsor & Hartford, Windsor County, VT
Contract Amount: $8,671,323.00; Completion Date: 10/12/18

Contractor: **MONOKO, LLC**

Reviewed & Approved By: **Keri Monokandilos**

Keri Monokandilos, Manager

Date: **09/09/2016**

Engineer: Paul Perry IV, Resident Engineer
PO Box 1873; 61 Depot Street
Wilder, VT 05088-1873
802-498-8255 cell; 802-281-5000 office; 802-281-5002 fax
paul.perry@vermont.gov
mark.sargent@vermont.gov
pmcdonald@gpinet.com
ann.gammell@vermont.gov

Revision: correction made as noted.

4580 MEMORIAL DRIVE,
ST. JOHNSBURY, VT 05819
P 802-748-5898
RES@MYFAIRPOINT.NET

RES

RUGGLES ENGINEERING SERVICES INC.

September 9, 2016

Monoko, LLC
1037 Peninsula Ave
Tarpon Springs, FL 34689

RE:IM BPNT(13) Winsdor 42N/S, 41C – Traffic Control Plan Addendum - Resubmittal

Dear Drosso,

Please use this and the attached plans for your latest resubmission.

Note: Numbering Sequence based on PDF pages with submittal cover.
Sheet T-11 Temporary Lane Closure (Page 3).

1. Removed misc. 500′ dimension.
2. The minimum shoulder taper for 55MPH is 185′ not 220′. The adjacent 12′ lane is not used for the calculation. The width of the shoulder is used for the calculation. See table in T-12 and Plans to confirm. 200′ is conservative and adequate. No change.

Sheet T-12 Temporary Lane Closure (Page 4)

1. Not changed to 220′. See comments previous.
2. The table for cone spacing is a maximum spacing requirement. Cones can be spaced closer. No Change.

Sheet T-23 (page 5)

1. Shoulder taper not changed. See comments previous.
2. There is no space for additional acceleration for the ramp traffic.
3. Notes expanded to include the flagger sign 500′ in advance of the flagger.
4. Added note requesting UTO. UTO more appropriate for thru traffic on I-89 S?
5. Added note for additional PCMS Board on I-91. South side of U-Turn MM 70.5.

Sheet T-13 (page7)

1. Barrier not proposed to extend beyond clear zone. Guardrail is also present. No plan to make a positive connection to guardrail either. Attenuators will be used.

Rolling Roadblock Plan
Page 14 (TEI 16 page 7) – Removed note, wrong project. May have caused confusion about the length of the project. See calculations on previous page.

Page 15. Removed Sample sign progression tables. Traffic is not stopping only slow.

Also I have added the "be prepared to stop" signs in advance of the work if a full stop is needed. I have also added the PCMS Board on I-91S.

Sincerely,

Nathan P. Sicard, P.E.
Civil Engineer

Enc.

ADVANCED WARNING FOR TEMPORARY LEFT AND RIGHT LANE CLOSURES I-89 SOUTHBOUND

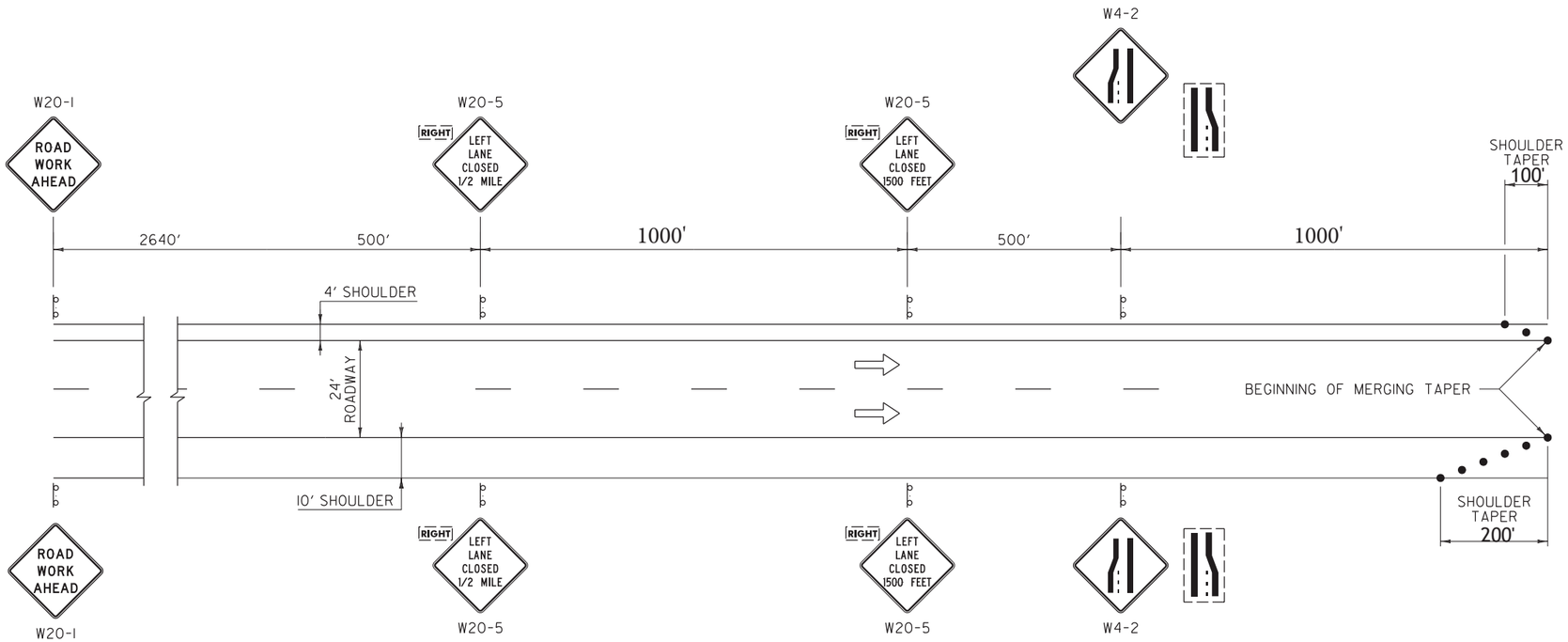

GENERAL NOTES:

1. IF APPLICABLE, THE CONTRACTOR SHALL HAVE SIGNS FOR CLOSURE OF RIGHT AND LEFT LANES ON PROJECT BEFORE WORK COMMENCES.

   FOR A SHORT TERM PROJECT (THREE CONSECUTIVE DAYS OR LESS), SIGNS MAY BE POST MOUNTED OR PORTABLE.

LEGEND

⇨ FLOW OF TRAFFIC

• RETROREFLECTIVE PLASTIC DRUM /cone

OTHER STDS. REQUIRED: **T–1, T–12, T–31**

REVISIONS AND CORRECTIONS

AUG. 6, 2012 - ORIGINAL APPROVAL DATE

APPROVED

HIGHWAY SAFETY & DESIGN ENGINEER

DIRECTOR OF PROGRAM DEVELOPMENT

Mark D. Richter

FEDERAL HIGHWAY ADMINISTRATION

CONSTRUCTION APPROACH SIGNING DIVIDED HIGHWAY ONE LANE CLOSED

VERMONT AGENCY OF TRANSPORTATION

STANDARD

T-11

MODIFIED

Temporary Daily Closure - LEFT LANE
I-89 SOUTHBOUND

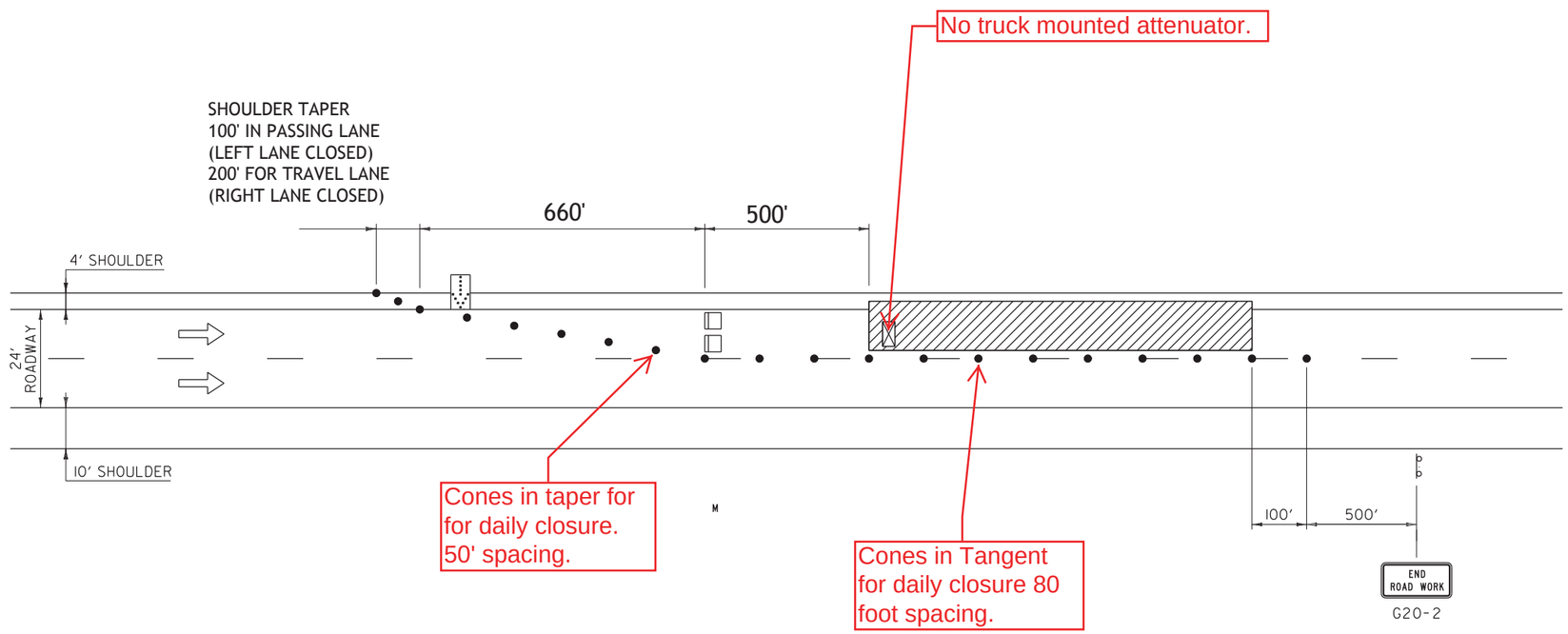

LEGEND

- FLOW OF TRAFFIC
- CHANNELIZING DEVICE
- FLASHING ARROW PANEL
- TYPE III BARRICADE
- WORK AREA

GENERAL NOTES:

CHANNELIZING DEVICES OTHER THAN RETROREFLECTIVE PLASTIC DRUMS SHALL BE ALLOWED ALONG THE BUFFER SPACE AND WORK AREA. THE TYPE OF DEVICE SHALL BE CONSISTENT THROUGHOUT THE BUFFER SPACE AND WORK AREA AND SHALL REMAIN STABLE WHILE UNATTENDED.

THE NUMBER OF CHANNELIZING DEVICES, TYPE III BARRICADE AND OTHER TRAFFIC CONTROL DEVICES SHOWN ARE FOR ILLUSTRATIVE PURPOSES ONLY. THE ACTUAL NUMBER REQUIRED ARE TO BE DETERMINED BASED ON INDIVIDUAL DETOUR CONDITIONS (TAPERS, SPEED LIMITS, LENGTH OF DETOUR, CURVE, ETC.). WARNING LIGHTS SHALL NOT BE USED ON CHANNELIZING DEVICES.

PLACE LAST CHANNELIZING DEVICE 100 FEET BEYOND THE ANTICIPATED WORK ZONE TERMINAL POINT EACH DAY.

THE ARROW PANEL SHALL BE PLACED ON THE SHOULDER OF THE ROADWAY, AS CLOSE AS PRACTICAL TO THE BEGINNING OF THE MERGING TAPER.

POSTED SPEED (MPH)	TAPER LENGTHS (FT)		TANGENT W=12 FT (L/2)	BARRIER FLARE RATE (MINIMUM)	MINIMUM BUFFER SPACE LENGTH (FT)	MAXIMUM CHANNELIZING DEVICE SPACING (FT)	
	SHOULDER W=10 FT (L/3)	MERGING 12 FT LANE (L)				TAPER (S)	TANGENT (2S)
55	185	660	330	1:13	495	55	110

OTHER STDS. REQUIRED: **T–1, T–11**

TRAFFIC CONTROL DIVIDED HIGHWAY ONE LANE CLOSED

VERMONT AGENCY OF TRANSPORTATION

STANDARD

T-12

Modified

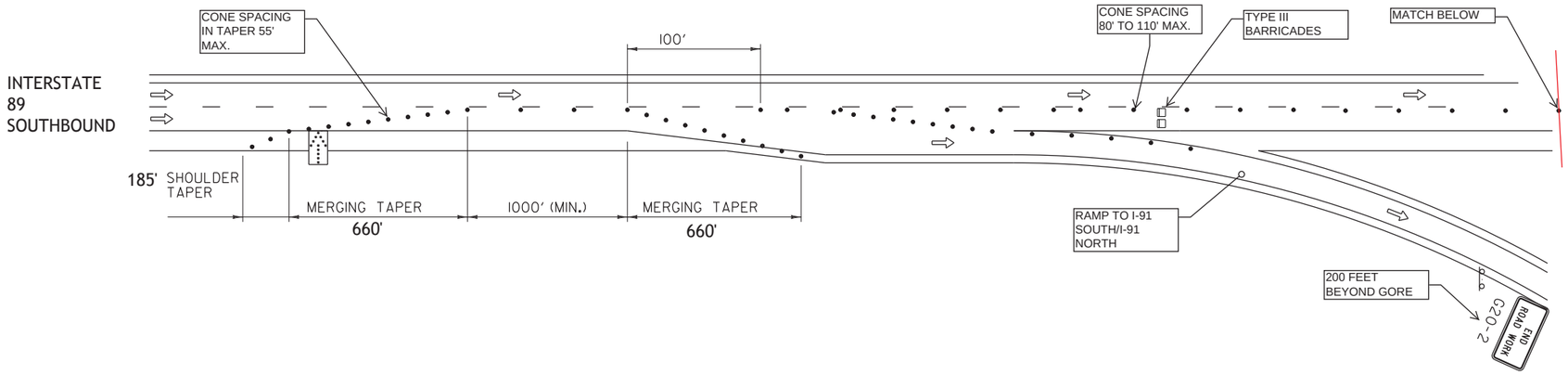

GENERAL NOTES:

ALL WORK VEHICLES SHALL DISPLAY HIGH-INTENSITY ROTATING, FLASHING, OSCILLATING, OR STROBE LIGHTS, IN ADDITION TO VEHICLE HAZARD LIGHTS.

THE NUMBER OF CHANNELIZING DEVICES AND OTHER TRAFFIC CONTROL DEVICES SHOWN ARE FOR ILLUSTRATIVE PURPOSES ONLY. THE ACTUAL NUMBER REQUIRED ARE TO BE DETERMINED BASED ON INDIVIDUAL DETOUR CONDITIONS (TAPERS, SPEED LIMITS, LENGTH OF DETOUR, CURVE, ETC.). WARNING LIGHTS SHALL NOT BE USED ON CHANNELIZING DEVICES.

ALL DISTANCES ARE DESIRABLE MINIMUMS. FIELD CONDITIONS SHALL CONTROL THE ACTUAL PLACEMENT.

HAND WORK MUST BE PERFORMED WITH A SPOTTER AT ALL TIMES.

AT ENTRANCE RAMPS; THE ''YIELD'' (RI-2) SIGN SHALL BE PLACED AT THE THEORETICAL GORE TO PROVIDE ADEQUATE SIGHT DISTANCE OF ONCOMING MAINLINE VEHICULAR TRAFFIC.

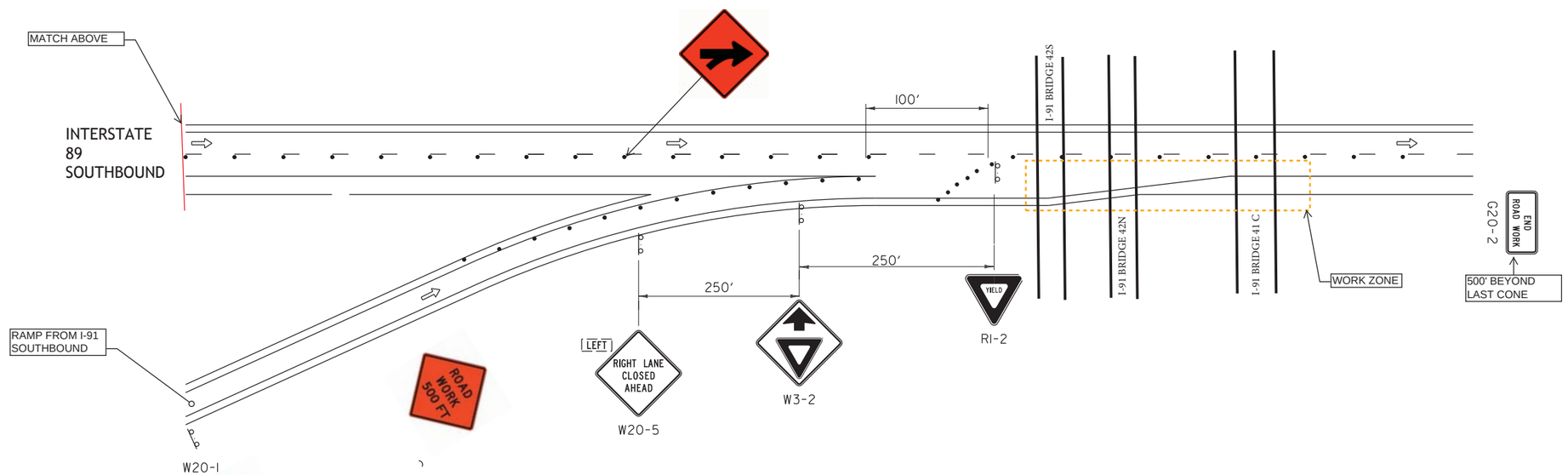

NOTES:

1. CONES ON TANGENTS WILL BE SPACED PER SHEET T-12.
2. STANDARD T-11 WILL BE USED IN ADVANCE OF ALL CLOSURES.
3. A FLAGGER MAY B USED AT THE RAMP ENTRANCE IF YIELDING IS DETERIMINED UNACCEPTABLE. "BE PREPARED TO STOP" AND "FLAGGER AHEAD" WILL BE ADDED IN 500 FOOT INCREMENTS ON THE RAMP. THERE IS APPROXIMATELY 1500' FROM THE I-91 EXIT TO THE YIELD LOCATION WHICH WILL REQUIRE SIGNS TO BE ADJUSTED TO FIT THE SPACE. THE ADVISORY RAMP SPEED IS 30MPH. A UTO WILL BE USED ON I-89 UPSTREAM OF THE ON RAMP POSITIONED IN A MANNER THAT WILL NOT OBSTRUCT SIGNS OR SIGHT DISTANCE FOR TRAFFIC ENTERING I-89.
4. A PCMS BOARD WILL BE ADDED ON THE SOUTH SIDE OF THE U-TURN AT MM 70.5 ON I-91.

PCMS BOARD LANGUAGE :

PHASE I:
RAMP
TO
I-89S

PHASE 2:
TRAFFIC
STOPPED
AHEAD

LEGEND

- FLOW OF TRAFFIC
- CONES
- FLASHING ARROW PANEL

STATE OF VERMONT
BRIAN P. SICARD
No. 53831
Civil
LICENSED PROFESSIONAL ENGINEER

OTHER STDS. REQUIRED: T–1, T–12,

TRAFFIC CONTROL FOR TEMPORARY RIGHT LANE CLOSURE
INTERSTATE 89 - SOUTHBOUND UNDER I-91 BRIDGES 42S, 42N AND 41C

T - 23

MODIFIED

PERMANENT SIGN PLAN IN ADVANCE OF WORK ZONE/ LEFT LANE CLOSURE

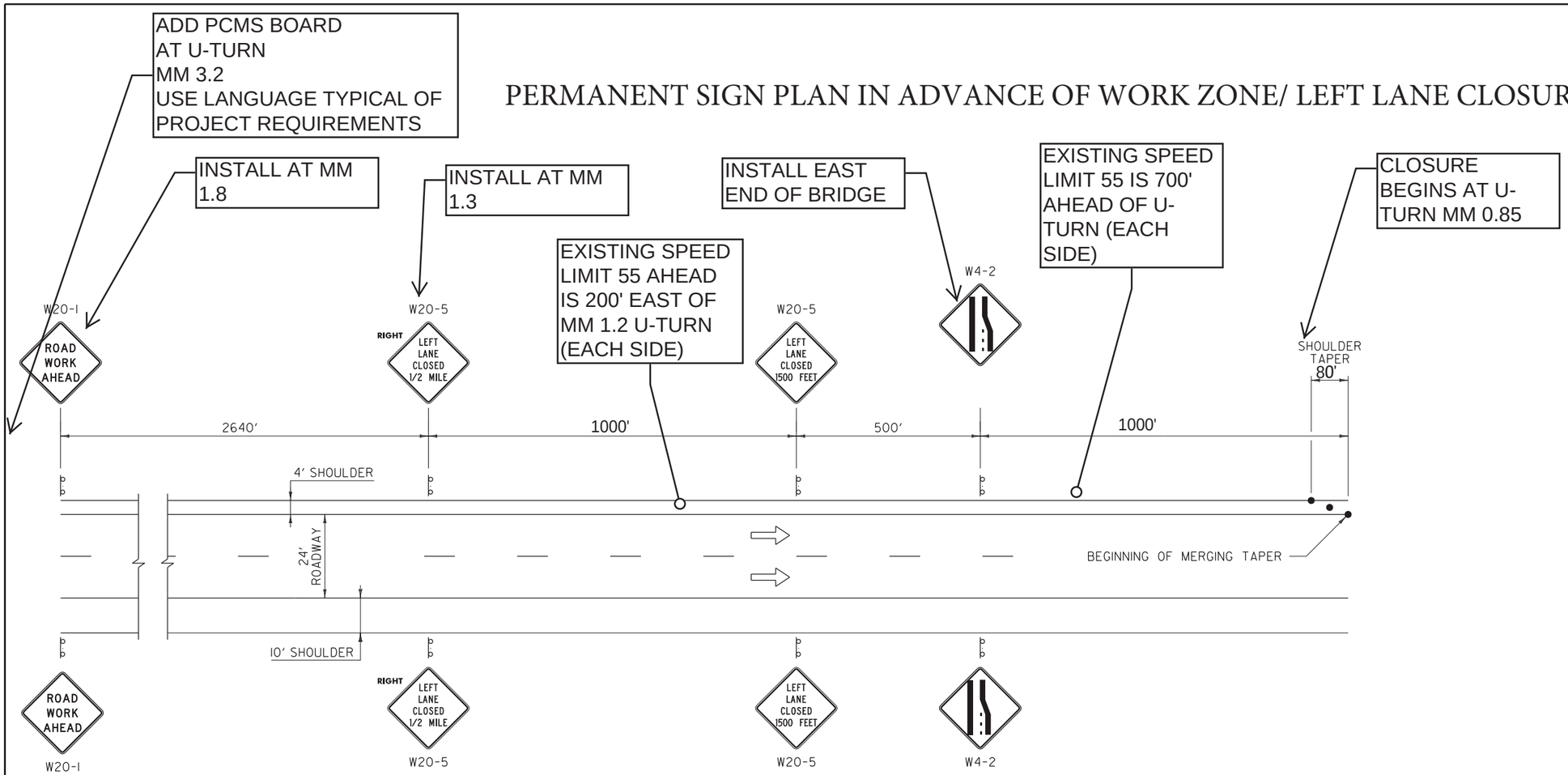

LEGEND

⇨ FLOW OF TRAFFIC

● RETROREFLECTIVE PLASTIC DRUM /cone

STATE OF VERMONT
BRIAN P. SICARD
No. 53831
Civil
LICENSED PROFESSIONAL ENGINEER

OTHER STDS. REQUIRED: **T–1, T–12, T–31**

REVISIONS AND CORRECTIONS

AUG. 6, 2012 - ORIGINAL APPROVAL DATE

APPROVED

HIGHWAY SAFETY & DESIGN ENGINEER

DIRECTOR OF PROGRAM DEVELOPMENT

Mark D. Richter

FEDERAL HIGHWAY ADMINISTRATION

CONSTRUCTION APPROACH SIGNING DIVIDED HIGHWAY ONE LANE CLOSED

VERMONT AGENCY OF TRANSPORTATION

STANDARD

T-11

MODIFIED

EXISTING SPEED LIMIT
55MPH

Match advanced signs to T-11

IMMEDIATELY EAST OF U-TURN AT MM 0.85

The work zone is for stationary equipment required for the work above on the bridges. The northbound traffic is protected by existing guardrail for any encroachment into the clear zone.

NOTE:
BARRIER WALL FOR EACH LOCATION MAY BE REMOVED IF NOT REQUIRED. SCHEDULE WILL DETERMINE.

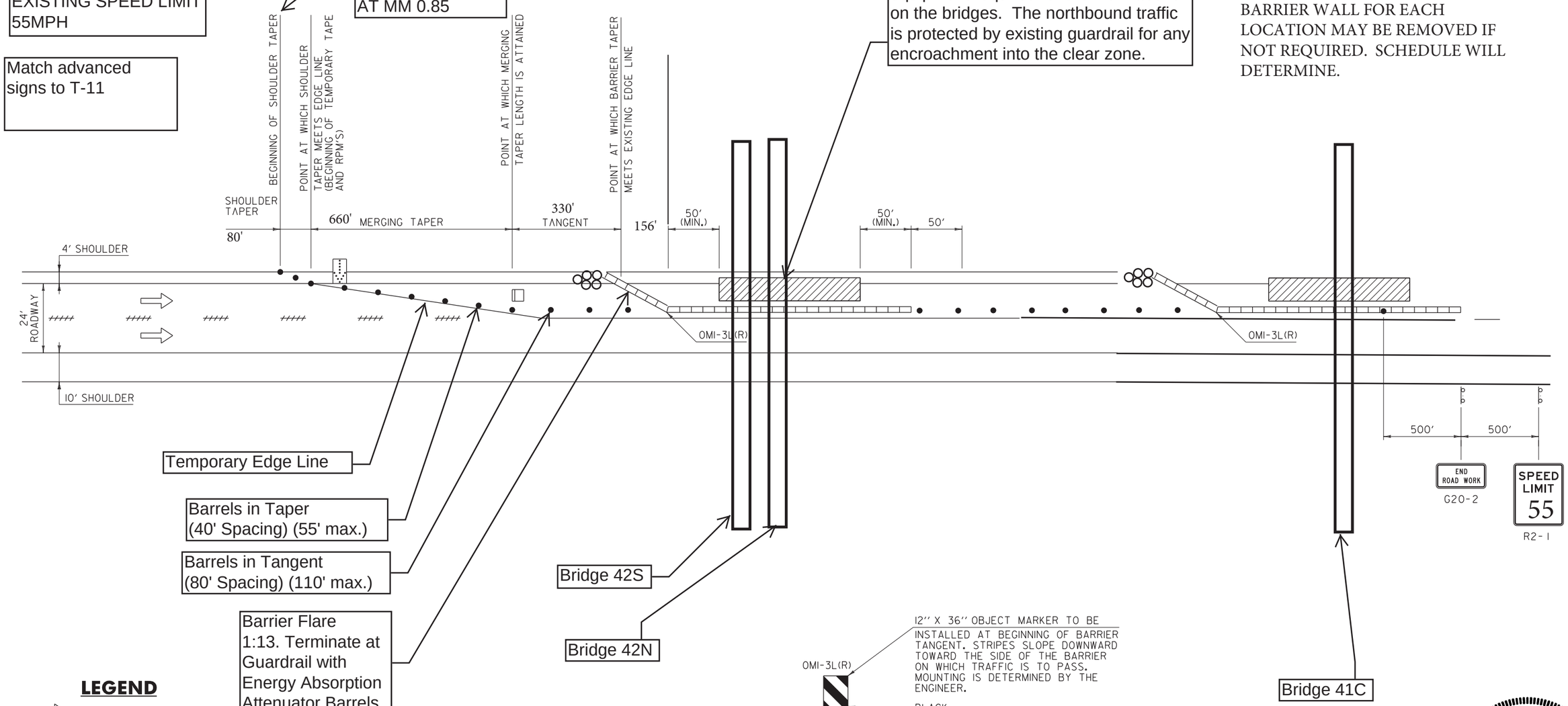

LEGEND

- FLOW OF TRAFFIC
- RETROREFLECTIVE PLASTIC DI
- FLASHING ARROW PANEL
- TYPE III BARRICADE
- PAVEMENT MARKING REMOVAL
- TEMPORARY BARRIER
- WORK AREA

ONE LANE CLOSED WITH TEMPORARY BARRIER PROTECTION

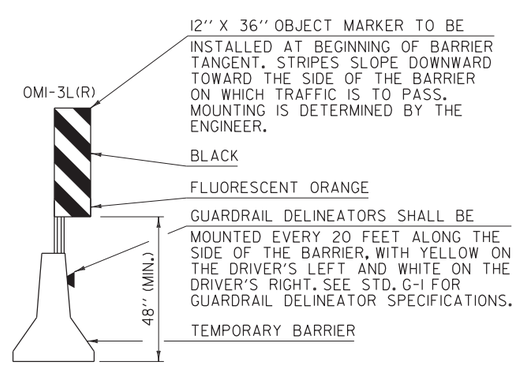

OTHER STDS. REQUIRED: G–1, T–1, T–11, T–12

STATE OF VERMONT
BRIAN P. SICARD
No. 53831
Civil
LICENSED PROFESSIONAL ENGINEER

LEFT LANE CLOSURE PLAN
FOR
LONG TERM CLOSURE UNDER BRIDGES 42S, 42N AND 41C

STANDARD
T-13
MODIFIED

General Information:

Rolling roadblocks are used when short duration roadway construction activities are taking place in/or above all lanes of a limited access highway, thus requiring traffic to be temporarily slowed rather than completely stopped. Traffic is paced at a safe speed (not less than 20 mph on freeways/expressways) to provide a gap in traffic that allows the work activities to be performed. The pacing of traffic is controlled by pilot vehicles (law enforcement vehicles with blue lights flashing) driven by uniformed law enforcement personnel. Any on-ramps between the beginning point of the pacing area and the work area shall be blocked until the pilot vehicle has passed. Two-way radio contact is necessary to provide constant communication between the pilot vehicle, contractor's workers, flaggers stationed at the on-ramp locations, and the project engineer. Advance warning signs are necessary to provide adequate warning to motorist of the traffic pacing area and the potential for a stopped condition.

USED FOR STRINGING CABLES OVER ALL LANES OF TRAFIC AT MM 0.5 (I-91 BRIDGES 42S, 42N AND 41C.

STATE OF VERMONT
STEPHAN P. SICARD
No. 53831
Civil
LICENSED
PROFESSIONAL ENGINEER

Traffic Control Requirements

1. Rolling roadblocks shall only be conducted on limited access highways within the State of Vermont.

2. All traffic control devices used to warn or guide traffic shall comply with the latest Manual on Uniform Traffic Control Devices (MUTCD), Vermont State Standards, and their latest revisions or any additional traffic control deemed necessary by the Project Manager. Failure to utilize proper measures shall be considered sufficient grounds to order cessation of the work immediately.

3. All diamond shaped signs shall be 48"x48" black legend and border on fluorescent orange background.

4. All roll-up sign material shall have retroreflective sheeting equal to or exceeding the American Association of State Highway and Transportation Officials (AASHTO) M 268 [American Society of Testing and Materials (ASTM) D 4956] Type VI and Type VII unless otherwise noted.

5. All sign stands shall meet National Cooperative Highway Research Program (NCHRP) Report 350 or the AASHTO Manual for assessing Safety Hardware (MASH). The appropriate resource shall be determined as described in the MASH publication.

6. Portable signs shall be placed on the edge of the roadway a minimum of one foot above the travelled way. All vegetation that interferes with visibility of the signs shall be removed. When placed behind guardrail, the bottom of the sign face shall be above the top of the guardrail.

7. If it is anticipated that traffic will back-up beyond the lead warning sign, then a Uniform Traffic Officer (UTO) with operating blue lights shall be parked ½ mile or more prior to where the traffic is expected to back-up. (During design, the anticipated queue length shall be checked to verify if stopping sight distance is adequate to the anticipated back-of-queue; additional measures may be necessary to ensure back-of-queue vehicular safety).

8. All traffic control personnel and personnel that are present to work within the highway shall all wear ANSI Class 2 retroreflective vests or an approved equivalent (law enforcement) for the duration of the operation.

Typical Special Conditions - to be included in the 1111 permit or adapted for use in the project plans (in which case the term Contractor should be substituted for Permit Holder, and notes that are not applicable should be omitted).

1. All work shall be accomplished in accordance with the attached plan dated, _____

2. Failure to complete all the work, approved under this permit, by the "work completion date" may result in suspension of the permit (by separate correspondence) until work is completed and approved by the Vermont Agency of Transportation.

3. Permit Holder shall perform work *within a set area at a specified time*, not during inclement weather, and only during off-peak hours when traffic volumes are at their lowest. I-89 SOUTH MM 0.7 TO MM 0.5, 9-10 AM, SEPTEMBER 12

4. All emergency service providers shall be notified of the planned closure and notified immediately following reopening to traffic.
    a. All on-call emergency response vehicles (i.e. fire, police, ambulances, etc.) shall be allowed unrestricted passage through the Work Zone.

5. The Permit Holder shall provide the District Transportation Administrator and the Work Zone Traffic Management Engineer with a traffic control plan showing the method to control to control traffic. This plan must be approved by the District Transportation Administrator.

6. The length of the rolling roadblock should be designed to accommodate the planned work period without stopping traffic. However, if this is not viable then traffic shall NOT be stopped for more than ten (10) minutes.

7. A pre-construction/preparation meeting with all parties involved must be held prior to the Permit Holder's employees or contractor beginning work to discuss how the project will

be completed. All logistics including communication issues and scheduling issues shall be resolved during this meeting. Note that the Permit Holder is required to notify the District Transportation Administrator five (5) working days in advance of such meeting.

8. The Permit Holder shall provide uniformed traffic officers (State Police, local authorities, or sheriffs) to stop traffic during the closure.

9. The District Transportation Administrator and the appropriate unit of the State Police/Sherriff's department are to be notified a minimum of 72 hours, prior to commencement of work.

10. Except by special permission from the District Transportation Administrator, the only vehicles allowed within the highway right-of-way for construction purposes will be necessary to support the work that is being performed.

11. It is the responsibility of the Permit Holder to verify the appropriate safety measures needed, prior to construction, so proper traffic control devices and/or personnel are available when and as necessary.

12. Additional restrictions and conditional requirements necessary to achieve the work associated with the rolling roadblock can be found in 19 VSA Section 1111 authorized state highway access and work permit and/or the special provisions form the contract document for the project.

Typical Implementation Sequence

1. Portable Changeable Message Signs (PCMS) shall be installed seven (7) days in advance of the closure. These shall be placed at or in advance of the beginning of the rolling roadblock. See Layout Plan

2. Prior to the start of work, place all necessary signs faced down on the shoulder as per approved traffic control plan, in advance of implementing the rolling roadblock.

3. The day of the event, all signs placed face down earlier are to be installed as to be visible to approaching traffic.

4. At the beginning of the rolling roadblock, one UTO (blue lights flashing) per lane shall begin escorting traffic toward the work area, stopping1500 feet in advance of the work area if necessary.

5. Prior to the release of the blue light escort, all Flaggers stationed at ramp locations will stop all traffic from entering the main line

6. Once the blue lights begin escorting the traffic to the work area the contractor shall provide a sweep vehicle in each direction of travel with amber strobe lights activated to follow the last vehicle traveling in advance of the rolling roadblock to ensure there are no

parked vehicles and no open ramps or other access points and that the roadway is clear before the work is to begin.

7. PCMS board are to be changed to their event messages once sweep vehicle movement begins.

8. All uniform traffic officers (UTOs), sweep vehicles, and on-site supervisors shall be in direct radio contact in case something unexpected should happen. Cell phones or walkie-talkies, if radios are not workable, shall be used to communicate during the rolling roadblock implementation.

9. A contingency plan shall be coordinated for concerns which could stop the rolling roadblock or delay the operation shall be made. (Planners and designers should pay special attention to possible ways to detour or clear traffic if needed. This plan should be developed as part of the Traffic Control Plan (TCP) as part of the rolling roadblock).

10. Once permit work is completed the roadway will return to normal conditions. If additional work is required on the shoulder then additional traffic control devices and signs will be required.

11. When work is completed the PCMS board messages shall be changed to the after-event messages or be turned off.

12. Deployment and pick up of all traffic control devices shall conform to the current MUTCD, Part 6 guidance.

13. If multiple closures are required to achieve the work at hand, then a successive rolling roadblock should not be started until the traffic from the preceding rolling roadblock has been sufficiently cleared from the work location.

Pacing Design Considerations

The design shall evaluate the actual distance required for the pacing operation based on site specific features such as: roadway geometrics, pacing speeds, regulatory speeds, interchange spacing, work duration, availability of traffic control officers, traffic volumes and maximum queue length.

The starting point of a traffic pacing operation must consider the following factors: the speed of the pacing vehicles, the location of entrance ramps, and horizontal and vertical alignment of the facility.

In some cases it may be necessary to close a lane at the work site to position a crane(s) and the materials to be lifted. All material to be installed shall be on-site before the traffic pacing operation begins.

It may be necessary to install temporary barrier walls to protect pre-positioned and assembled materials in the right of way.

The **minimum speed allowed** for a pacing operation is 10 mph, with 20 mph the preferred speed.
The **maximum allowed work duration** is ½ hour (30 minutes).
The **maximum practical pacing operation length** is 10 miles.

S_r = Regulatory speed (mph) S_p = Pacing speed (mph) t_w = work duration (min)

$$L = \frac{t_w}{60} S_p \left(\frac{S_p}{S_r - S_p} + 1 \right)$$

$$L = L_c + L_w$$

L = Total pacing distance in miles L_c = distance paced vehicles must travel L_w = distance paced vehicle before the vehicles at regulatory speed travel while work is performed have cleared the work zone.

$$L_c = \left(\frac{\frac{t_w}{60} \times S_p^2}{S_r - S_p} \right)$$

$$L_w = \left(\frac{t_w}{60} \times S_p \right)$$

Time of Work = 2 minutes, regulatory speed = 65mph, pacing speed 20 mph. l=((2/60)*20)*((20/(65-20))+1)
Therefore L = 1 mile.
Lc = ((2/60)*20^2)/(65-20) = 0.3 miles
Lw = 0.7 miles

Traffic Pacing Distances (miles)

Regulatory Speed (MPH)	Total Time Allowed for Work Activity (minutes)					
	5	10	15	20	25	30
70	2.3 miles	4.7 miles	7 miles	9.3 miles	*	*
65	2.4 miles	4.8 miles	7.2 miles	9.6 miles	*	*
60	2.5 miles	5 miles	7.5 miles	10 miles	*	*
55	2.6 miles	5.2 miles	7.9 miles	*	*	*
50	2.8 miles	5.6 miles	8.3 miles	*	*	*

+ Site-specific design required.

Notes: The time allowed for work activity starts just after the last vehicle traveling at the pre-pacing regulatory speed clears the work area and ends just as the pacing operation reaches the work area. The time allowed for work must include the time required to clear the roadway of equipment, materials, and personnel.

The selection of the speed of the roadblock should consider the work duration and the location of upstream on-ramps which need to be closed, should generally be 15 mph or greater. Example: a 15 minute duration would require the pace vehicle to travel 5 miles while the work is perform at a 20 mph pace plus an additional 2.2 miles must be traveled to include buffer space, set-up and deceleration distance before the vehicles traveling at the regular speed have cleared the work zone. This distance does not include the 1500 feet before the work area where traffic would be required to stop if work was not completed as scheduled.

SEE SITE SPECIFIC MAP FOR PCMS BOARD AND SIGNS

Rolling Roadblock Planning Check list

Note that Roadblocks shall not be performed during periods of fog, rain or snow or other inclement weather conditions. Rolling Roadblocks are preferred to occur during off-peak hours, those times when traffic volumes are at their lowest

Purpose

Description where, when, why work is to take place.

Town	HARTFORD
Route	I-89 SOUTH
Direction (NB,SB,EB,WB)	SB
When (early AM, nighttime, weekends)	MID MORNING, AFTER RUSH HOUR
Date	SEPTEMBER 12
Days of the Week	1
Times of the Day	9-10 OR UNTIL CABLES ARE STRUNG
Number of lanes to be blocked	TWO LANE, ROLLING
Vehicle Volume	
Entity Performing Work	MONOKO
Brief description of work	SLOW TRAFFIC TO ALLOW A GAP IN TRAFFIC TO STRING WIRE ROPE ACCROSS BOTH LANES AND SECURE ABOVE TRAVEL LANES. REQUIRES 2 MINUTE GAP, REPEATED UNTIL ALL ROPES ARE STRUNG.

Communication Plan

Advance planning meeting to be held 1-2 weeks in advance to define everyone's responsibilities and make sure activities required for accomplishing the task will be in place for the event.

Advance Planning meeting conducted on	
Lead coordinator	
Press release (responsible party)	
Date of Press Release	
Newspaper(s)	
Television Station(s)	
Web Page	
Traffic Operation Center (contact date)	
Other	

Resources

Essential tools for a successful event.

Portable Changeable Message Sign -(QTY)	2
PCMS- Before Message	SEE TRAFFIC CONTROL MAP
PCMS – During Message	SEE TRAFFIC CONTROL MAP
PCMS – After Message	SEE TRAFFIC CONTROL MAP
Traffic Control Plan (attach layout)	
# of Law Enforcement Vehicles	3, TWO FOR ROLLING ROADBLOCK, ONE FOR I-91 RAMP.
# of Sweep Vehicles with strobe lights	2 OF THE LAW ENFORCEMENT VEHICLES
# of contractor vehicles with strobe lights to assist in closing off U-Turns within pace area	TWO
# of Flaggers to assist in managing on-ramp traffic within pace area	ONE
# of individuals with radios to communicate event plan	
Other	

Emergency Management

Notification to emergency management (persons responsible; a list of contacts; and written notification is recommended).

Fire	
Ambulance	
Police	
Other	

Project Contact List

Essential personnel necessary coordinate with for this event.

Contractor	
AOT-Project Manager	
AOT-District Representative	
Person Coordinating work area	

Event Operations

Pace vehicles provided by law enforcement only. Means of communication with each entity at time of event and a list of contact information

Contractor	MONOKO
Sub-Contract	NONE
AOT-District Representative	
AOT-Designer	
AOT-Construction Personnel	
AOT-Other	
Law Enforcement Officer(s)	
Traffic Control Provider	

SITE PLAN FOR ROLLING ROADBLOCK ON I-89 SOUTHBOUND

NOTES:
SPEED SET AT 20MPH. ROLLING ROADBLOCK IS USED FOR STRINGING CABLES ACROSS ALL LANES OF TRAFFIC. ROLLING ROAD BLOCK IS INTENDED TO COMPLY WITH VTRANS TEI16-601.
INTENDED TIME FOR WORK ACTIVITY IS 2 MINUTES WHICHREQUIRES 1.0 MILE OF ADVANCED TRAFFIC PACING.
L-1.0 MILES, Lc=0.3 MILES, Lw=0.7 MILES
THE PROCESS WILL BE REPEATED UNTIL ALL OF THE CABLES ARE SECURED AND OUT OF THE CLEAR ZONES.

BEGIN SIGNS AT MM 3.0

1000 FEET IN ADVANCE OF ROADBLOCK

500 FEET IN ADVANCE OF BEGINING OF ROADBLOCK

PCMS Board, EAST SIDE OF U-TURN MM 4.27

PCMS BOARD MESSAGES
ONE WEEK IN ADVANCE OF THE ROLLING ROADBLOCK

PHASE 1	PHASE 2
1. ROAD	DAY
WORK	SEPT X
PLANNED	TIME

2. MESSAGE DURING ROLLING BLOCK

SLOW	KEEP
TRAFFIC	SAFE
AHEAD	DISTANCE

3. CHANGE WHEN CLOSURE IS COMPLETE.

ROAD	STAY
WORK	ALERT
AHEAD	

UTO's BEGIN ROLLING ROADBLOCK AT MM 2.0 LOCATED 1 MILE WEST OF TEMPORARY LANE CLOSURE

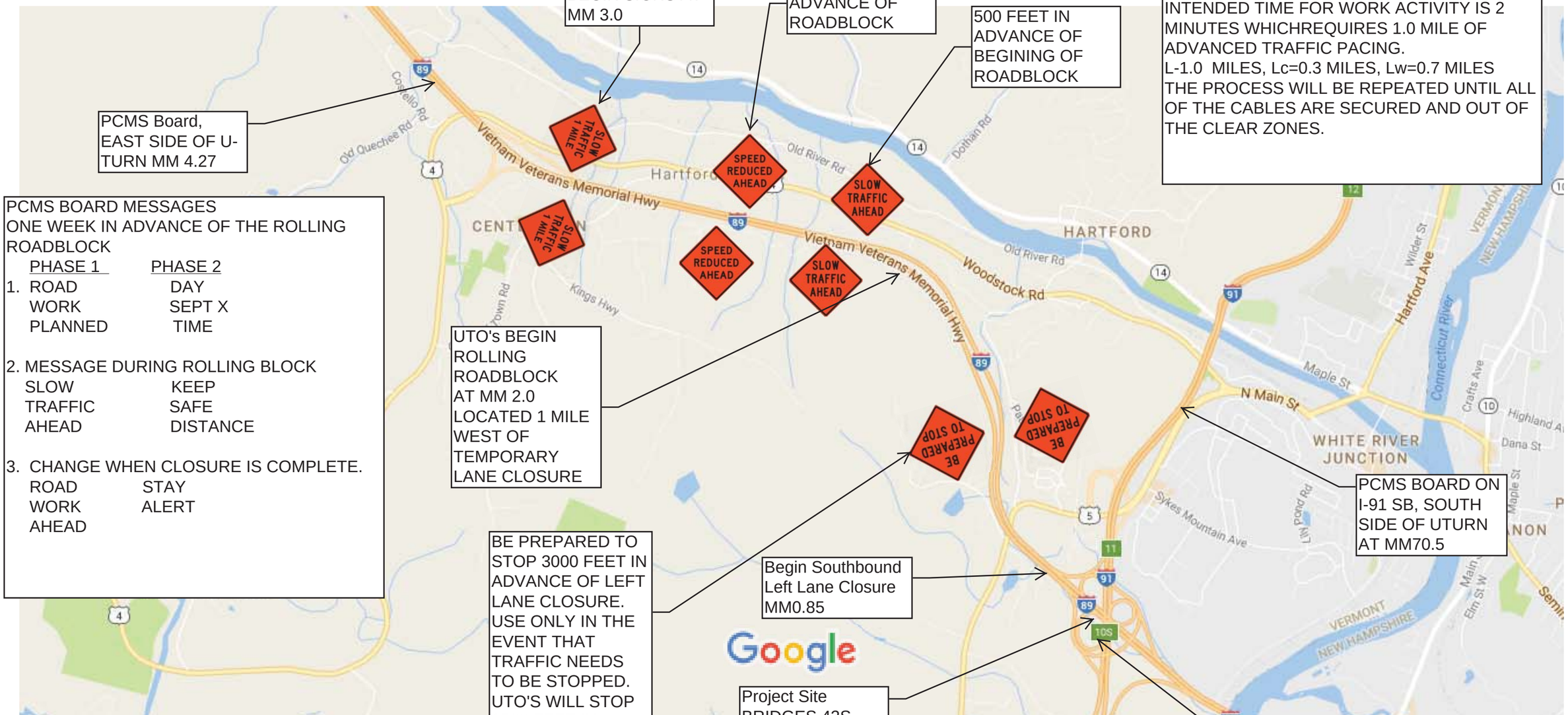

PCMS BOARD ON I-91 SB, SOUTH SIDE OF UTURN AT MM70.5

BE PREPARED TO STOP 3000 FEET IN ADVANCE OF LEFT LANE CLOSURE. USE ONLY IN THE EVENT THAT TRAFFIC NEEDS TO BE STOPPED. UTO'S WILL STOP 1500 FEET IN ADVANCE OF WORK IF NEEDED. STOPPED TRAFFIC MUST BE RELEASED WITHIN 10 MINUTES

Begin Southbound Left Lane Closure MM0.85

Project Site BRIDGES 42S, 42N AND 41C (SOUTHBOUND ONLY)

Map data ©2016 Google 2000 ft

RAMP FROM I-91 SB TO INCLUDE BE PREPARED TO STOP AND FLAGGER AHEAD USED AT 500 FOOT INCREMENTS ON RAMP IN ADVANCE OF STOP. TRAFFIC TO STOP WHEN LAST CAR PASSES THE WORK ZONE FROM THE ROLLING ROADBLOCK. TRAFFIC WILL BE RELEASED WHEN THE UTO AND THRU TRAFFIC PASS. THIS WORK WILL BE DONE DURING LOW VOLUME PERIODS SO TRAFFIC DOES NOT BACK UP ONTO I-91.