MONOKO, LLC

1037 Peninsula Avenue
Tarpon Springs, FL 34689-2125 (727) 940-3244
E-mail Address: MonokoLLC@aol.com (727) 279-8795 Fax

Submittal No.: 07a: Steel Repair Drawings, Brdg 41 N & S

Date: October 11, 2016

Vermont Department of Transportation
Southeast Regional Construction Office
Attn: Ann Gammell, P.E., Regional Construction Engineer
PO Box 1873; 61 Depot Street
Wilder, VT 05088-1873
(802) 522-5719; (802) 281-5000; (802) 281-5002 fax
Ann.Gammell@Vermont.gov

Description: Proposal/Contract Number**:** Windsor-Hartford IM BPNT (13)
Letting Date: 10/09/15; Award Date: 11/02/15
Project Description: Bridge Painting of Eleven Bridges
In the Towns of Windsor & Hartford, Windsor County, VT
Contract Amount: $8,671,323.00; Completion Date: 10/12/18

Contractor: **MONOKO, LLC**

Reviewed & Approved By: *Keri Monokandilos*
Keri Monokandilos, Manager

Date: **10/11/2016**

Engineer: Paul Perry IV, Resident Engineer
PO Box 1873; 61 Depot Street
Wilder, VT 05088-1873
802-498-8255 cell; 802-281-5000 office; 802-281-5002 fax
paul.perry@vermont.gov
mark.sargent@vermont.gov
pmcdonald@gpinet.com
ann.gammell@vermont.gov

Revision:

Michael J Smith
CWI 95120981
QC1 EXP. 12/1/2016

WELDING PROCEDURE SPECIFICATION (WPS)

PREQUALIFIED _____ **QUALIFIED BY TEST** YES

Company Name: Merrimack Sheet Metal
Welding Process(es): GMAW
Supporting PQR # (s): LA-1/2016

Identification #: LA-5
Revision: NA Date: N/A By: N/A
Authorized: Michael J. Smith Date: 5/10/2016

Type- Manual: [ ] Semi-Auto: [YES]
Machine: [ ] Automatic: [ ]

JOINT DESIGN USED

Single [YES] Double Weld [NO]
Backing Yes / No [NO]
Backing Material: NO
Root Opening and Face Dimension: N/A
Groove Angle, U or J: N/A
Back Gouge Y/N/Type: NO

BASE METALS

Base Metal: A36:A588;A709
Type or Grade: B
Thickness: Groove: N/A
Fillet: Unlimited
Pipe Diameter: N/A

FILLER METALS

A.W.S. Specification: A5.28
A.W.S. Classification: ER80S-NI1
Trade Name: Lincoln Superarc LA-75

SHIELDING

Flux: N/A
Electrode-flux Class: NA
Gas: Ar/Co2
Composition: 90AR 10Co2
Flow Rate: 35-40 CFH
Gas Cup Size: 1/2 inch

POSITION

Position of Groove: N/A
Vertical Progression, up: N/A
Fillet: Flat & Horizontal
Down: _____

ELECTRICAL CHARACTERISTICS

Transfer Mode (GMAW):
Short-Circuting / Globular / Spray: SPRAY
Current AC, DCEP, DCEN, Pulsed: DCEP
Other: none
Tungsten Electrode (GTAW):
Size: N/A
Type: N/A

TECHNIQUE

Stringer or Weave Bead: Stringer
Multi or Single Pass (per side): Multi Pass
Number of Electrodes: ONE
Electrode Spacing: Longitudinal: N/A
Lateral: N/A
Angle: 15 degree push angle
Contact Tube to Work Distance: 1/2" TO 3/4" ESO
Peening: none
Interpass Cleaning: none

PREHEAT

Preheat Temp., Min.: 70 deg. F
Interpass Temp. Min.: 100 deg. F
Interpass Temp. Max.: 350 deg. F

POSTWELD HEAT TREATMENT

Temp.: none
Time: N/A

WELDING PROCEDURE

Pass or Weld Layer Layer(s)	Process	FILLER METALS Class	FILLER METALS Diam.		CURRENT Type & Polarity	CURRENT Amps or WFS	Volts	Travel Speed	JOINT DETAIL
ALL	GMAW	ER80S-NI1	.045 dia		DCEP	250-270	27-28	13-18 IPM	SINGLE SIDED FILLET

Michael J Smith
CWI 95120981
QC1 EXP. 12/1/2016

WELDING PROCEDURE SPECIFICATION (WPS)

PREQUALIFIED _____ **QUALIFIED BY TEST** YES

Company Name: Merrimack Sheet Metal
Welding Process(es): GMAW
Supporting PQR # (s): LA-1/2016

Identification #: LA-16
Revision: NA Date: N/A By: N/A
Authorized: Michael J. Smith Date: 5/10/2016

Type- Manual [ ] Semi-Auto [YES]
Machine [ ] Automatic [ ]

JOINT DESIGN USED

Single [YES] Double Weld [NO]
Backing Yes / No [NO]
Backing Material: NO
Root Opening and Face Dimension: R=0 F=1/8 min
Groove Angle, U or J: 45 Degree
Back Gouge Y/N/Type: NO

POSITION

Position of Groove: FLAT 1G Fillet: NA
Vertical Progression, up: N/A Down: _____

BASE METALS

Base Metal: A36:A588;A709
Type or Grade: B
Thickness: Groove: 1/4" min. Unlimited
Fillet: N/A
Pipe Diameter: N/A

ELECTRICAL CHARACTERISTICS

Transfer Mode (GMAW):
Short-Circuting / Globular / Spray: SPRAY
Current AC, DCEP, DCEN, Pulsed: DCEP
Other: none
Tungsten Electrode (GTAW):
Size: N/A
Type: N/A

FILLER METALS

A.W.S. Specification: A5.28
A.W.S. Classification: ER80S-NI1
Trade Name: Lincoln Superarc LA-75

TECHNIQUE

Stringer or Weave Bead: Stringer
Multi or Single Pass (per side): Multi Pass
Number of Electrodes: ONE
Electrode Spacing: Longitudinal: N/A
Lateral: N/A
Angle: 15 degree push angle
Contact Tube to Work Distance: 1/2" TO 3/4" ESO
Peening: none
Interpass Cleaning: none

SHIELDING

Flux: N/A
Electrode-flux Class: NA
Gas: Ar/Co2
Composition: 90AR 10Co2
Flow Rate: 35-40 CFH
Gas Cup Size: 1/2 inch

PREHEAT

Preheat Temp., Min.: 70 deg. F
Interpass Temp. Min.: 100 deg. F
Interpass Temp. Max.: 350 deg. F

POSTWELD HEAT TREATMENT

Temp.: none
Time: N/A

WELDING PROCEDURE

Pass or Weld Layer Layer(s)	Process	FILLER METALS Class	FILLER METALS Diam.	CURRENT Type & Polarity	CURRENT Amps or WFS	Volts	Travel Speed	JOINT DETAIL
ALL	GMAW	ER80S-NI1	.045 dia	DCEP	250-270	27-28	13-18 IPM	TC-P4-GF

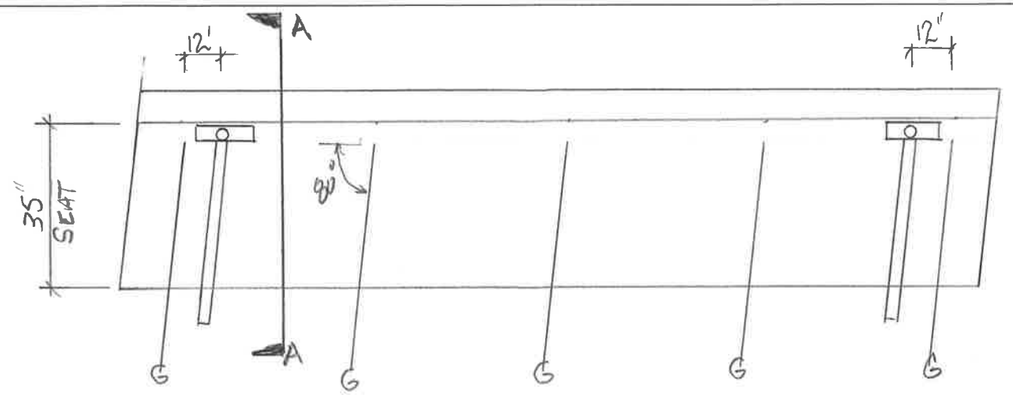

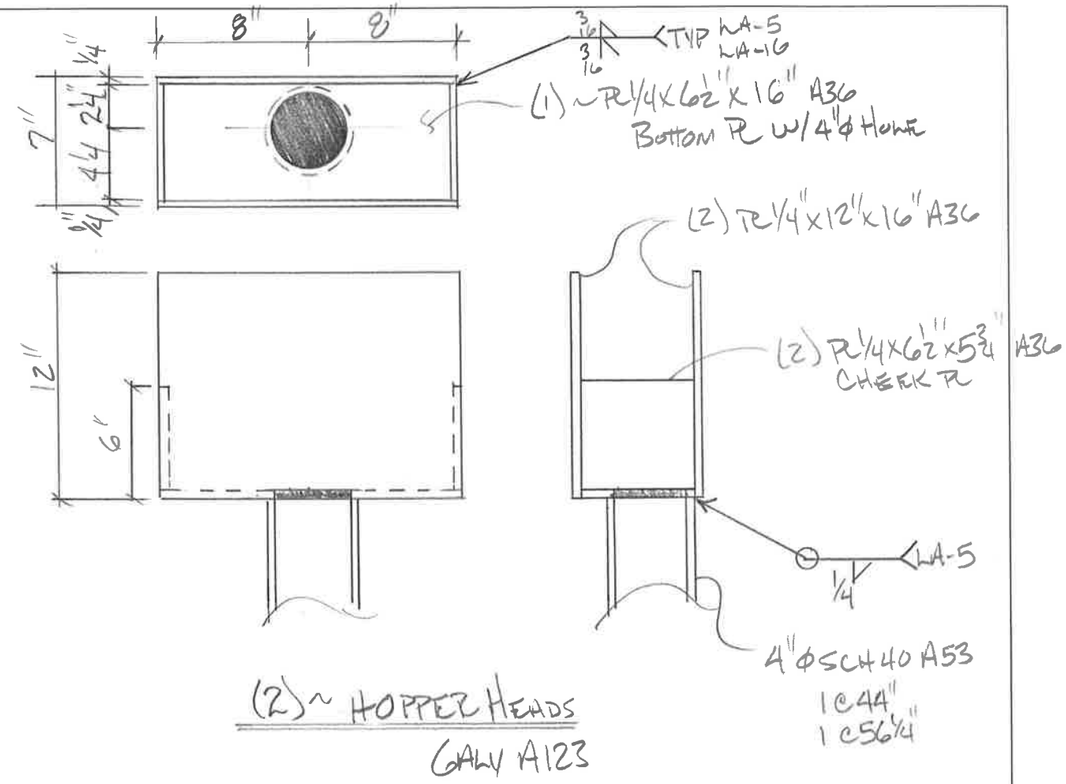

(2) ~ HOPPER HEADS
GALV A123

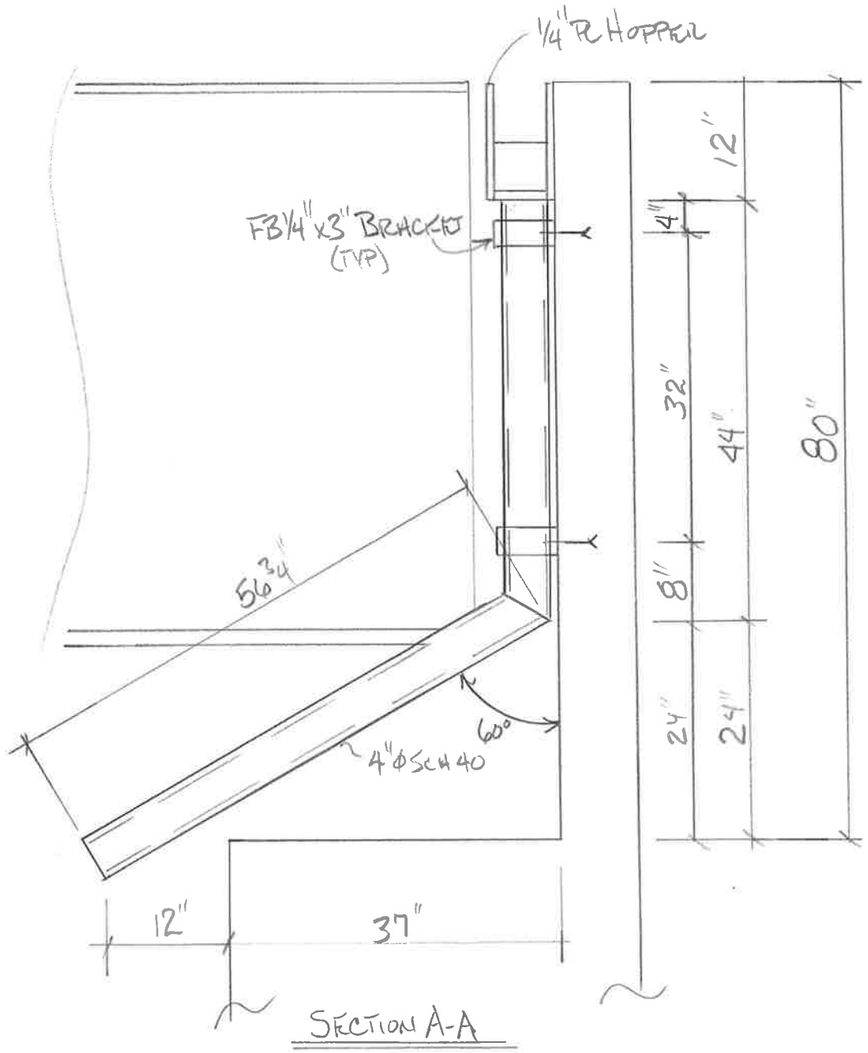

SECTION A-A

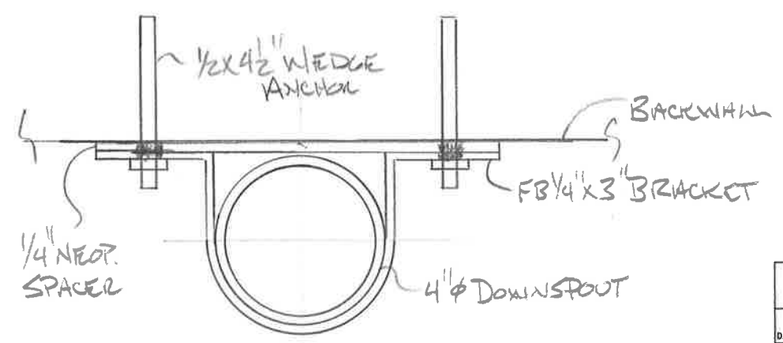

BRACKET DETAIL

JM BPNT (13)

DOWNSPOUTS		
DATE SUB.	PROJECT	WINDSOR - HARTFORD VT
	LOCATION	
	ARCHITECT	
DATE APP.	ENGINEER	
DATE DIST.	CUSTOMER	MONOCO

REV. NO.	DATE	DESCRIPTION

HOLES: 13/16" Φ (U.N.O.) DATE:
PAINT: GALV A123

MERRIMACK
MISCELLANEOUS IRON STRUCTURAL STEEL FABRICATORS

MERRIMACK SHEET METAL
119 HALL ST.
CONCORD, N.H., 03301
TEL. (603) 224-7766
FAX. (603) 224-7925

DR BY JD
REV BY PC
JOB NO.
DWG NO. H1