MONOKO, LLC

1037 Peninsula Avenue
Tarpon Springs, FL 34689-2125
E-mail Address: MonokoLLC@aol.com

(727) 940-3244
(727) 279-8795 Fax

Submittal No.: 03b: Containment Plan for 9 Bridges

Date: June 15, 2016

Vermont Department of Transportation
Southeast Regional Construction Office
Attn: Ann Gammell, P.E., Regional Construction Engineer
PO Box 1873; 61 Depot Street
Wilder, VT 05088-1873
(802) 522-5719; (802) 281-5000; (802) 281-5002 fax
Ann.Gammell@Vermont.gov

Description: Proposal/Contract Number**:** Windsor-Hartford IM BPNT (13)
Letting Date: 10/09/15; Award Date: 11/02/15
Project Description: Bridge Painting of Eleven Bridges
In the Towns of Windsor & Hartford, Windsor County, VT
Contract Amount: $8,671,323.00; Completion Date: 10/12/18

Contractor: MONOKO, LLC

Reviewed & Approved By: *Keri Monokandilos*
Keri Monokandilos, Manager

Date: **06/15/2016**

Engineer: Paul Perry IV, Resident Engineer
PO Box 1873; 61 Depot Street
Wilder, VT 05088-1873
802-498-8255 cell; 802-281-5000 office; 802-281-5002 fax
paul.perry@vermont.gov
mark.sargent@vermont.gov
pmcdonald@gpinet.com
ann.gammell@vermont.gov

Revision: **The drawings in Submittal No. 3 are for 11 bridges which include Bridges 44N & S (RR Bridges). Submittal No. 03b attached, show drawings for 9 bridges only, without 44N & S. Submittal No. 03a, the Calculations apply to both plans, (Submittals Nos. 03 & 03b).**

Containment Plan
For 9 Bridges

Submitted to

Paul Perry IV, Resident Engineer
PO Box 1873; 61 Depot Street
Wilder, VT 05088-1873
802-498-8255 cell; 802-281-5000 office; 802-281-5002 fax
paul.perry@vermont.gov

for
Project

Proposal/Contract Number**: Windsor-Hartford IM BPNT (13)**
Letting Date: 10/09/15; Award Date: 11/02/15
Project Description: Bridge Painting of Eleven Bridges
In the Towns of Windsor & Hartford, Windsor County, VT
Contract Amount: $8,671,323.00; Completion Date: 10/12/18

By

Monoko, LLC
1037 Peninsula Avenue
Tarpon Springs, FL 34689

06/15/16

INDEX OF SHEETS:

C-1 TITLE SHEET
C-2 GENERAL NOTES (1 OF 2)
C-3 GENERAL NOTES (2 OF 2)
C-4 EXISTING BRIDGE SUMMARY
- BRIDGE NOS. 34N & 34S I 91 OVER TH. NO. 5, & BRIDGE NOS. 41N & 41S I 91 OVER RAMP C I 91
C-5 PLAN & ELEVATION
C-6 CONTAINMENT SECTION DETAILS (1 OF 2)
C-7 CONTAINMENT SECTION DETAILS (2 OF 2)
- BRIDGE NO. 41C I 91 OVER I 89 & BRIDGE NOS. 42N & 42S I 91 RAMP C OVER I 89
C-8 PLAN & ELEVATION
C-9 CONTAINMENT SECTION DETAILS (1 OF 3)
C-10 CONTAINMENT SECTION DETAILS (2 OF 3)
C-11 CONTAINMENT SECTION DETAILS (3 OF 3)
- BRIDGE NOS. 44N & 44S I 91 OVER US 4, VT 14, NECR, WHITE RIVER
C-12 NOT USED
C-13 NOT USED
C-14 NOT USED
C-15 NOT USED
C-16 NOT USED
- BRIDGE NOS. 45N & 45S I 91 OVER WILDER SH
C-17 PLAN & ELEVATION
C-18 CONTAINMENT SECTION DETAILS (1 OF 3)
C-19 CONTAINMENT SECTION DETAILS (2 OF 3)
C-20 CONTAINMENT SECTION DETAILS (3 OF 3)
C-21 CONTAINMENT MISCELLANEOUS DETAILS (1 OF 6)
C-22 CONTAINMENT MISCELLANEOUS DETAILS (2 OF 6)
C-23 CONTAINMENT MISCELLANEOUS DETAILS (3 OF 6)
C-24 CONTAINMENT MISCELLANEOUS DETAILS (4 OF 6)
C-25 CONTAINMENT MISCELLANEOUS DETAILS (5 OF 6)
C-26 CONTAINMENT MISCELLANEOUS DETAILS (6 OF 6)

VERMONT
DEPARTMENT OF TRANSPORTATION

PROJECT NO. IM BPNT (13)
ELEVEN BRIDGES ON I-91
BRIDGE NOS. 34N, 34S, 41N, 41S, 41C,
42N, 42S, 44N, 44S, 45N & 45S
WINDSOR COUNTY, VERMONT

ABRASIVE BLASTING CONTAINMENT PLANS

PREPARED FOR:

MONOKO, LLC.
1037 PENINSULA AVENUE
TARPON SPRINGS, FL 34689
PHONE (727) 940-3244
FAX (727) 279-8795

PREPARED BY:

A2B ENGINEERING, LLC.
5406 N. HOOVER BLVD., SUITE 12
TAMPA, FL 33634
PHONE (813) 249-2220
FAX (813) 793-4692
ENGINEER OF RECORD, PAUL R. STEIJLEN, PE
VERMONT P.E. LICENSE NUMBER 107795

STATE OF VERMONT
PAUL R. STEIJLEN
NO. 107795
CIVIL
LICENSED
PROFESSIONAL ENGINEER
15-16

SHEET NO.
C-1

SPECIFICATIONS:

VERMONT AGENCY OF TRANSPORTATION (VTRANS) STANDARD SPECIFICATIONS FOR ROAD AND BRIDGE CONSTRUCTION, 2014 EDITION, AND SUPPLEMENTS THERETO.

DESIGN CRITERIA:

DEAD LOAD (PLATFORM):	3 PSF
DEAD LOAD (SCAFFOLD):	220 LBS. (32'x28" MAX. 500 LBS. RATED)
LIVE LOAD (UNIFORM PLATFORM):	12 PSF (WEIGHT OF ½" STEEL GRIT)
LIVE LOAD (UNIFORM SCAFFOLD):	6 PSF (WEIGHT OF ¼" STEEL GRIT)
LIVE LOAD (CONCENTRATED):	500 LBS. (TWO WORKERS MAX.)

MATERIAL PROPERTIES:

STRUCTURAL SHAPES, PLATES & BARS:	ASTM A36, Fy = 36,000 PSI
STRUCTURAL TUBING:	ASTM A500, GRADE B, Fy = 46,000 PSI
STRUCTURAL BOLTS:	ASTM A325
TIMBER:	SOUTHERN PINE NO. 2 (OR BETTER)
CABLES:	6x19 IWRC EIP
METAL DECKING:	ASTM A611 OR A653, Fy = 33,000 PSI

ALL BOLTS SHALL BE ANCHOR BOLTS: RED HEAD TRUBOLT WEDGE TYPE ANCHORS OR EQUIVALENT.

REQUIRED PLATFORM CABLE SIZES
(⅜" Ø MIN. SUPPORT HANGER SPACING = 25'-0" MAX.)

OPTION #	PLATFORM CABLE	PLATFORM CABLE SPACING
1	9/16" Ø	5'-3" (MAX.)

USE ½" Ø MIN. SCAFFOLD CABLE WITH ⅜" Ø MIN. SUPPORT HANGERS SPACED AT 25'-0" MAXIMUM.

NO MORE THAN 2 WORKERS SHALL BE ALLOWED PER PLATFORM CABLE OR SCAFFOLD CABLE. LIMIT 500 LB TOTAL WEIGHT OF WORKERS AND ABRASIVE BLASTING ON 500 LB RATED SCAFFOLD.

STRUCTURAL IMPACT:

THE PLATFORM CONTAINMENT STRUCTURE HAS BEEN ANALYZED FOR AN AVERAGE LIVE LOAD ALLOWANCE OF 16 PSF (APPROXIMATELY ½" AVERAGE DEPTH OF STEEL GRIT, 1.5" MINERAL SLAG ABRASIVE OR 1.5" SAND ABRASIVE, PLUS THE UNIFORM WORKER LOADING). WHEN THE DEPTH OF SPENT ABRASIVES NEARS THE DEPTHS SPECIFIED, THE CONTRACTOR WILL CEASE ABRASIVE BLASTING OPERATIONS AND VACUUM THE SPENT ABRASIVES.

DEAD, LIVE AND WIND LOADS IMPOSED ON THE BRIDGE DUE TO INSTALLATION OF THE PROPOSED PLATFORM & CONTAINMENT SYSTEMS WILL HAVE NO ADVERSE EFFECT ON THE BRIDGE STRUCTURE, AS DEFINED IN (A) AASHTO STANDARDS SPECIFICATIONS FOR HIGHWAY BRIDGES (SIXTEENTH EDITION), FIGURE 3.7.6B AND (B) AASHTO MANUAL FOR CONDITION EVALUATION OF BRIDGES (SECOND EDITION), CHAPTER 6.6. THE BRIDGE HAS NOT BEEN ANALYZED FOR LOADS IMPOSED BY THE GRIT RECYCLING MACHINE (IF APPLICABLE). AS A RESULT, THE CONTRACTOR SHALL OBTAIN APPROVAL FROM THE OWNER FOR PLACEMENT OF ALL EQUIPMENT ALONG THE BRIDGE.

THE CONTAINMENT STRUCTURE HAS BEEN ANALYZED FOR A MAXIMUM WIND VELOCITY OF 40 MPH. IF WINDS NEARING OR EXCEEDING 40 MPH (OR A LESSER WIND IS SPECIFIED IN THE CONTRACT SPECIFICATIONS) ARE PREDICTED, BLASTING AND PAINTING OPERATIONS SHALL CEASE, THE CONTRACTOR SHALL THOROUGHLY COLLECT AND REMOVE ALL SPENT ABRASIVE MATERIAL AND DEBRIS GENERATED FROM THE BLASTING AND PAINTING ACTIVITIES USING A VACUUM TRUCK AND/OR PUMP, AND THE PAINT CONTAINMENT TARPAULINS SHALL BE ROLLED AND SECURED IN PLACE.

BASED ON THE MAXIMUM WIND VELOCITY OF 40 MPH (3.48 PSF WIND LOAD PER AASHTO), THE RESULTING LOAD TRANSFERRED TO A BRIDGE STRUCTURE IS 175 PLF, BASED ON A CONTAINMENT HEIGHT OF 50'-0". SINCE AASHTO SPECIFIES A LATERAL LOADING OF 300 PLF FOR DESIGN OF GIRDER BRIDGES, THE MAXIMUM ANTICIPATED WIND LOAD OF 175 PLF IS ACCEPTABLE. WIND LOADING ON GIRDER BRIDGES DOES NOT GOVERN.

FOR PROJECTS INVOLVING THE INSTALLATION OF SUSPENDED PLATFORM, AASHTO ALLOWS A 36% INCREASE IN STRESS FOR TEMPORARY LOADS (18 KSI INVENTORY RATING VERSUS 24.5 KSI OPERATING RATING). THE UNIFORM DESIGN FOR LOAD GIRDERS BRIDGES IS 64 PSF, AND THUS, THE ANTICIPATED WEIGHT OF THE PLATFORM CONTAINMENT (APPROX. 19 PSF) ADDED TO THIS ORIGINAL DESIGN LOADING RESULTS IN A MAXIMUM D+L LOADING OF 83 PSF ON THE GIRDERS (19 PSF + 64 PSF EQUIVALENT LIVE LOADING). TEMPORARY LOADING APPLIED TO THE BRIDGE MEMBERS RESULT IN A MAXIMUM 30% INCREASE, WHICH IS BELOW THE 36% INCREASED ALLOWED BY AASHTO. SINCE THE METHOD ASSUMES THAT THE EXISTING BRIDGE MEMBERS ARE 100% STRESSED PRIOR TO LOADING, THIS GENERAL COMPARISON IS CONSIDERED VERY CONSERVATIVE.

GENERAL:

THESE DRAWINGS DEPICT THE ABRASIVE BLASTING & PAINT CONTAINMENT DESIGNS TO BE UTILIZED BY MONOKO, LLC., FOR WINDSOR COUNTY, VERMONT FOR THE FOLLOWING BRIDGES:

BRIDGE NOS. 34N & 34S (I-91 OVER TH NO 5) (M.M. 57.40)
BRIDGE NOS. 41N & 41S (I-91 OVER RAMP C I-91) (M.M 69.68)
BRIDGE NO. 41C (I-91 RAMP C OVER I-89) (M.M. 69.51)
BRIDGE NOS. 42N & 42S (I-91 OVER I-89) (M.M. 69.81)
BRIDGE NOS. 44N & 44S (I-91 OVER US 4, VT 14, NECR, WHITE RIVER) (M.M. 70.94)
BRIDGE NOS. 45N & 45S (I-91 OVER WILDER SH) (M.M. 72.01)

THE CONTRACTOR SHALL PROVIDE A MULTI-STAGE DECONTAMINATION TRAILER AND WATER WASH FACILITY FOR THE DURATION OF THE PROJECT, LOCATED AT AN APPROPRIATE SITE DETERMINED BY THE CONTRACTOR.

WORKERS WILL ACCESS THE BELOW-DECK CONTAINMENTS AT THE ABUTMENTS OR THE PIERS, FROM THE GROUND BELOW USING LADDERS OR AS REQUIRED BY CONTRACTOR'S MEANS AND METHODS. THE LADDERS WILL BE SECURED TO THE PLATFORM SYSTEM OR THE SUBSTRUCTURE.

FOR WORK PERFORMED FROM 500 LBS RATED ALUMINUM SCAFFOLDS SUPPORTED BY ½" Ø CABLES RIGGED ALONG THE ENTIRE LENGTH OF THE BRIDGE, WORKER SAFETY TIE-OFF CABLES AND WORKER HARNESSES WILL BE UTILIZED DURING ALL WORK, INCLUDING INSTALLATION & REMOVAL OF THE PLATFORM SYSTEMS & DURING TRAVEL UP & DOWN THE LADDERS, IN ACCORDANCE WITH OSHA GUIDELINES.

THE ABRASIVE BLASTING CONTAINMENT AND/OR SUSPENDED PLATFORM DESIGNS, DETAILS AND INSTALLATION SPECIFICATIONS INCLUDED IN THIS PACKAGE WERE PREPARED UNDER THE DIRECTION OF THE CONTRACTOR. BY ACCEPTING THESE PLANS FOR SUBMITTAL, THE CONTRACTOR CONFIRMS THAT THE PLANS HAVE BEEN REVIEWED FOR CORRECTNESS, AND THAT THE SYSTEMS WILL BE INSTALLED IN ACCORDANCE WITH THE PLANS.

THE CONTRACTOR FULLY UNDERSTANDS & AGREES THAT A2B ENGINEERING, LLC AND THEIR CERTIFYING ENGINEER(S) ARE NOT RESPONSIBLE FOR THE ULTIMATE TECHNIQUES AND/OR METHODS OF CONSTRUCTION USED ON THIS PROJECT, OR THE SAFETY PRECAUTIONS & PROGRAMS INCIDENT THERETO, OR FOR ANY LOSS OR DAMAGES RESULTING FROM THE CONTRACTOR'S FAILURE TO COMPLY WITH LAWS AND REGULATIONS APPLICABLE TO THE FURNISHING, INSTALLING AND/OR PERFORMANCE OF WORK.

THE CONTRACTOR FULLY UNDERSTANDS & AGREES THAT A2B ENGINEERING, LLC HAS PREPARED THESE SUBMITTALS WITH THE UNDERSTANDING THAT THE CONTRACTOR AND THEIR EMPLOYEES HAVE THE KNOWLEDGE & EXPERTISE IN THE PROPER RIGGING OF THE CATENARY CONTAINMENT & WORKER ACCESS SYSTEMS PRESENTED ON THESE DRAWINGS, AND IS NOT IN NEED OF DETAILED INSTALLATION AND/OR DISMANTLING PROCEDURES FOR SUCH INSTALLATIONS.

THE CONTRACTOR FULLY UNDERSTANDS & AGREES THAT BY ACCEPTING THESE DRAWINGS FOR SUBMITTAL, THEY ARE FULLY RESPONSIBLE FOR COMPLYING WITH ALL FEDERAL, STATE & LOCAL CODES & REGULATIONS (PRIMARILY OSHA) AND HERE-BY HOLDS A2B ENGINEERING, LLC AND THEIR CERTIFYING ENGINEER(S) HARMLESS, AND INDEMNIFIES THEM FOR ANY LOSS OR DAMAGES RESULTING FROM THE CONTRACTOR'S FAILURE TO COMPLY WITH ANY/ALL APPLICABLE CODES, REGULATIONS AND/OR ANY MANUFACTURER'S INSTALLATION REQUIREMENTS, REGARDLESS OF WHETHER SAID INFORMATION IS OR IS NOT INCLUDED AS PART OF THESE SUBMITTALS.

THESE DRAWINGS & CALCULATIONS (IF APPLICABLE) HAVE BEEN PREPARED FOR THIS PROJECT ONLY. A2B ENGINEERING, LLC AND THEIR CERTIFYING ENGINEER(S) HAVE NO LIABILITY SHOULD ANY PORTIONS OF THESE DRAWINGS AND/OR CALCULATIONS BE USED FOR DIFFERENT PROJECT.

THESE PLANS WERE PREPARED WITHOUT THE BENEFIT OF AS-BUILT BRIDGE PLANS. DUE TO UNCERTAINTIES OF THE EXISTING STRUCTURE, THE CONTRACTOR MAY MAKE MINOR MODIFICATIONS TO THE PAINT CONTAINMENT STRUCTURE DETAILED IN THESE PLANS. A2B ENGINEERING, LLC SHALL BE NOTIFIED OF ANY MODIFICATIONS TO ENSURE THAT THE STRUCTURAL INTEGRITY OF THE PAINT CONTAINMENT STRUCTURE IS NOT COMPROMISED.

STATE OF VERMONT
PAUL R. STEIJLEN
NO. 107795
CIVIL
LICENSED
PROFESSIONAL ENGINEER
6-13-16

Bridge Nos. All

REVISIONS		
DATE	BY	DESCRIPTION

PAUL STEIJLEN P.E.
P.E. LICENSE NUMBER 107795
A2B ENGINEERING, LLC.
5406 N. HOOVER BLVD., SUITE 12
TAMPA, FL 33634

MONOKO, LLC.
1037 PENINSULA AVENUE
TARPON SPRINGS, FL 34689
PHONE (727) 940-3244
FAX (727) 279-8795

DRAWN BY: BDN 03/16
CHECKED BY: PDB 03/16
DESIGNED BY: MAT 03/16
CHECKED BY: PRS 03/16

VERMONT AGENCY OF TRANSPORTATION

ROAD NO.	COUNTY	PROJECT NO.
	WINDSOR	IM BPNT(13)

SHEET TITLE: GENERAL NOTES (1 OF 2)

PROJECT NAME: ELEVEN BRIDGES ON I-91

REF. DWG. NO.

SHEET NO. C-2

CONTAINMENT ENCLOSURE:

THE ABRASIVE BLASTING CONTAINMENT SYSTEM SHALL CONFORM TO THE REQUIREMENTS OF OSHA 1926 SUBPART L, OSHA 29 CFR 1910.28, ANSI A10.8 AND SSPC GUIDE 6.

ALL ABRASIVE BLAST CLEANING CONTAINMENTS, INCLUDING GROUND COVER, SIDEWALLS AND ENDWALLS, SHALL BE CONSTRUCTED OF 100% AIR IMPERMEABLE FIRE RESISTANT TARPAULINS. ADJACENT TARPAULIN PANELS SHALL BE FASTENED TOGETHER BY ROLLING AND CLAMPING OR BY CLAMPING TO LUMBER TO CREATE A CONTINUOUS IMPENETRABLE SEAL. THE CONTRACTOR MAY USE ANY APPROPRIATE METHOD AVAILABLE (TAPE, SPRAY FOAM, ETC) TO PROVIDE A CONTINUOUS SEAL TO CONTAIN DUST EMISSIONS (ABRASIVE BLASTING) AND/OR SOLVENT CLEANING/WATER WASHING OPERATIONS. SEE MISCELLANEOUS CONTAINMENT DETAILS SHEETS.

FOR BRIDGE TO GRADE CONTAINMENTS, THE TARPAULIN BASE SHALL BE SEALED WITH SANDBAGS OR SIMILAR WEIGHTS. FOR SSPC CLASS 1A CONTAINMENTS, LUMBER PLANKS OR ALUMINUM SCAFFOLDS SHALL BE PLACED BELOW THE SANDBAGS TO PROVIDE A "CONTINUOUS" SEAL. FOR CLASS 2A CONTAINMENTS (OR LESSER), USE SANDBAGS OR SIMILAR WEIGHTED MATERIAL AT 5 FT (±) INTERVALS. FOR VERTICAL CONTAINMENTS, THE CONTRACTOR MAY UTILIZE CABLES ANCHORED WITH WEIGHTS OR ANCHORED TO THE GROUND TO SUPPORT THE VERTICAL TARPAULIN WALLS.

FOR PLATFORM AND CABLE SUPPORTED CONTAINMENTS, TARPAULIN WALLS SHALL BE SECURED TO APPROPRIATE BRIDGE ELEMENTS TO SEAL THE ENCLOSURE.

EXISTING BRIDGE DRAINS ENCLOSED WITHIN THE PAINT CONTAINMENT STRUCTURE SHALL BE TEMPORARILY PLUGGED OR WATER RUNOFF DIRECTED AWAY FROM THE CONTAINMENT ENCLOSURE AS SPECIFIED OR PERMITTED IN THE CONTRACT SPECIFICATIONS. AT THE CONCLUSION OF EACH WORKDAY, ALL PLUGGED DRAINS SHALL BE UNPLUGGED TO RESTORE DECK DRAINAGE.

WHEN ABRASIVE BLASTING IS PERFORMED NEAR THE TARPAULIN WALL, THE ABRASIVE BLAST SHALL BE DIRECTED AWAY FROM THE TARPAULIN WALL. WHEN WORK IS PERFORMED NEAR AN INLET OPENING, THE OPENING SHALL BE TEMPORARILY SEALED TO MINIMIZE LOSS OF EMISSIONS.

TARPAULINS SHALL BE 100% AIR/WATER IMPERMEABLE TO CONTAIN THE WASTE WATER AND BLASTING DEBRIS AND ALLOW FOR VACUUMING.

FOR SSPC TYPE 1A CONTAINMENTS, WORKERS SHALL ACCESS EACH CONTAINMENT THROUGH DOUBLE DOOR AIRLOCK ENTRANCE WHICH ALLOWS THE WORKERS TO SEAL ONE DOOR PRIOR TO ENTERING/EXITING THE CONTAINMENT THROUGH THE OTHER DOOR. TARPAULIN DOORS SHALL BE CLOSED AND SEALED DURING BLASTING OPERATIONS TO PREVENT LOSS OF EMISSIONS. MINIMIZE PASSAGE IN AND OUT OF CONTAINMENT STRUCTURES DURING BLASTING OPERATIONS. DURING SANDBLASTING OPERATIONS, ALL WORKERS/PERSONNEL SHALL BE CLEANED WITH A HEPA VACUUM PRIOR TO LEAVING THE CONTAINMENT.

FOR SSPC TYPE 2A CONTAINMENTS (OR LESSER), WORKERS SHALL ACCESS EACH CONTAINMENT THROUGH OVERLAPPING TARPAULIN DOORS. TARPAULIN DOORS SHALL BE CLOSED AND SEALED DURING BLASTING OPERATIONS TO PREVENT LOSS OF EMISSIONS. MINIMIZE PASSAGE IN AND OUT OF CONTAINMENT STRUCTURES DURING BLASTING OPERATIONS, SEE MISCELLANEOUS CONTAINMENT DETAILS SHEETS.

AT THE CONCLUSION OF EACH WORK DAY, THE CONTRACTOR SHALL THOROUGHLY COLLECT AND REMOVE ALL SPENT ABRASIVE MATERIAL AND DEBRIS GENERATED FROM THE BLASTING AND PAINTING ACTIVITIES USING A VACUUM TRUCK AND/OR PUMP.

CONTAINMENT NOTES:

ALL WORK SHALL BE ASSEMBLED IN ACCORDANCE WITH THESE DRAWINGS, THE MANUFACTURER'S INSTRUCTIONS AND CRITERIA, INDUSTRY GUIDELINES AND THE MOST CURRENT EDITION OF ALL FEDERAL, STATE AND LOCAL REGULATIONS, STATUTES ORDINANCES, AND THE PROJECT SPECIFICATIONS. A2B ENGINEERING, LLC SHALL BE NOTIFIED WHERE DISCREPANCIES EXIST BETWEEN THESE DRAWINGS AND THE MANUFACTURER'S INSTRUCTIONS TO VERIFY THE APPROPRIATE CRITERIA.

THE CONTRACTOR IS SOLELY RESPONSIBLE TO ENSURE THAT ALL FALL PROTECTION IS INSTALLED PER OSHA AND PROJECT SPECIFICATIONS.

PRIOR TO CONSTRUCTION OF THE PAINT CONTAINMENT STRUCTURE ALL MATERIAL SHALL BE THOROUGHLY INSPECTED TO ENSURE THAT THEY CONTAIN NO DEFICIENCIES THAT WILL COMPROMISE THE STRUCTURAL INTEGRITY OF THE PAINT CONTAINMENT STRUCTURE. THE CONTRACTOR SHALL PERFORM PERIODIC INSPECTIONS OF THE PAINT CONTAINMENT STRUCTURE TO ENSURE THE STRUCTURAL INTEGRITY OF THE STRUCTURE REMAINS SECURE.

VENTILATION SYSTEM:

THE CONTRACTOR SHALL PROVIDE MECHANICAL EXHAUST VENTILATION FOR THE ABRASIVE BLASTING CONTAINMENT STRUCTURES USING ONE OR MORE MOBILE DUST COLLECTORS. THE CONTRACTOR PROPOSES TO USE ONE (1) 45,000 AT 13" W.G. CFM MOBILE DUST COLLECTOR MANUFACTURED BY ADVANCED RECYCLING SYSTEMS, INC. THE DUST COLLECTOR HAS AN ASSUMED DUST EXHAUST CAPACITY BASED ON THE NUMBER OF DUCTS PROVIDED AS:

EXHAUST CAPACITY WITH 4 - 20 INCH DIAMETER DUCTS:	48,000 CFM
EXHAUST CAPACITY WITH 3 - 20 INCH DIAMETER DUCTS:	45,000 CFM
EXHAUST CAPACITY WITH 2 - 20 INCH DIAMETER DUCTS:	40,000 CFM
EXHAUST CAPACITY WITH 1 - 20 INCH DIAMETER DUCT:	24,000 CFM

REFER TO PLAN SHEETS FOR NUMBER OF EXHAUST DUCTS AND INLET AREA REQUIREMENTS.

THE MAIN OBJECTIVE FOR USING THE NEGATIVE AIR EXHAUST VENTILATION SYSTEM IS TO CONTAIN AIRBORNE PARTICULATE WITHIN THE CONTAINMENT STRUCTURE AND PROVIDE AIR FLOW THROUGH THE CONTAINMENT STRUCTURE. CONTAINMENT SIDEWALLS, ENDWALLS AND GROUND COVERS SHALL BE CONSTRUCTED AND SEALED TO PREVENT EXCESSIVE LEAKS BETWEEN THE PANELS AND ALONG THE GROUND. A PRELIMINARY VENTILATION SYSTEM TEST OF EACH CONTAINMENT SHALL BE PERFORMED PRIOR TO STARTING ABRASIVE BLASTING OPERATIONS. AIR FLOW THROUGH THE CONTAINMENT SHALL BE VERIFIED AT MULTIPLE LOCATIONS THROUGHOUT THE CONTAINMENT USING A HAND-HELD MANOMETER. IF THE EXHAUST VENTILATION SYSTEM IS UNABLE TO ACHIEVE THE SPECIFIED AIR FLOW THROUGH THE CONTAINMENT STRUCTURE OR ADEQUATELY REMOVE AIRBORNE PARTICULATE MATTER, THE CONTRACTOR SHALL PROVIDE ADDITIONAL DUST COLLECTORS AND EXHAUST DUCTS, OR REDUCE THE SIZE OF THE ACTIVE PAINT CONTAINMENT ENCLOSURE BY INSTALLING INTERNAL TARPAULIN WALLS. THE EXHAUST VENTILATION SYSTEMS SHALL REMAIN IN OPERATION DURING CLEANING AND VACUUMING OPERATIONS.

VENTILATION SYSTEM TABLE (CROSS-DRAFT)

NO. OF 20" Ø DUCTS PROVIDED	4	3	2	1
VOLUME Q, CFM	48,000	45,000	40,000	24,000
MAX. CONTAINMENT AREA, SQ. FT.(V=100 FT/MIN.)	480.0	450.0	400.0	240.0
MIN. CONTAINMENT AREA, SQ. FT.(V=300 FT/MIN.)	160.0	150.0	133.3	80.0
MAX. INLET AREA, SQ. FT. (V=700 FT/MIN)	68.6	64.3	57.1	34.3
MIN. INLET AREA, SQ. FT. (V=1000 FT/MIN)	48.0	45.0	40.0	24.0

STATE OF VERMONT
PAUL R. STEIJLEN
NO. 107795
CIVIL
LICENSED
PROFESSIONAL ENGINEER
6/13/16

Bridge Nos. All

REVISIONS		
DATE	BY	DESCRIPTION

PAUL STEIJLEN P.E.
P.E. LICENSE NUMBER 107795
A2B ENGINEERING, LLC.
5406 N. HOOVER BLVD., SUITE 12
TAMPA, FL 33634

MONOKO, LLC.
1037 PENINSULA AVENUE
TARPON SPRINGS, FL 34689
PHONE (727) 940-3244
FAX (727) 279-8795

DRAWN BY: BDN 03/16
CHECKED BY: PDB 03/16
DESIGNED BY: MAT 03/16
CHECKED BY: PRS 03/16

VERMONT
AGENCY OF TRANSPORTATION

ROAD NO.	COUNTY	PROJECT NO.
	WINDSOR	IM BPNT(13)

SHEET TITLE: GENERAL NOTES (2 OF 2)

REF. DWG. NO.

PROJECT NAME: ELEVEN BRIDGES ON I-91

SHEET NO. C-3

P:\187 Monoko, LLC\18 Windsor - Hartford\1 Containment Plans\Cadd\BDGenNotes01.dgn

Cad12 6/14/2016 7:18:53 AM

FOR CONTAINMENT PLANS SEE SHEETS C-5 THRU C-7

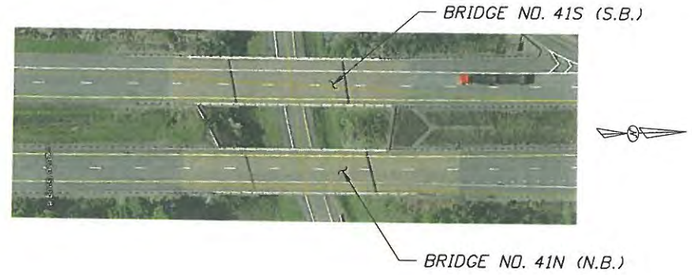

BRIDGE No.	No. OF SPANS	OVERALL LENGTH	WIDTH
34N	3	168'-0"	34'-10"
34S	3	168'-0"	34'-10"
41N	1	112'-0"	43'-0"
41S	1	100'-0"	43'-0"

BRIDGE NOS. 34N & 34S
I 91 OVER TH. NO. 5

BRIDGE NOS. 41N & 41S
I 91 OVER RAMP C I 91

FOR CONTAINMENT PLANS SEE SHEETS C-8 THRU C-10

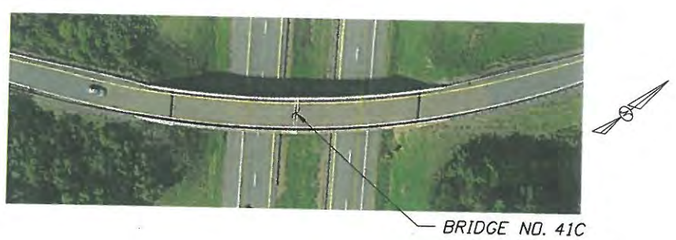

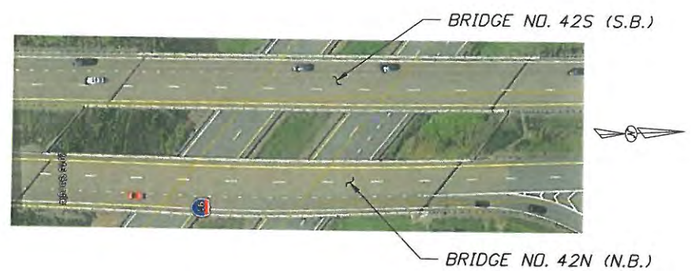

BRIDGE No.	No. OF SPANS	OVERALL LENGTH	WIDTH
41C	2	196'-0"	28'-10"
42N	4	346'-1"	46'-10"
42S	4	326'-1"	46'-10"

BRIDGE NO. 41C
I 91 OVER I 89

BRIDGE NOS. 42N & 42S
I 91 RAMP C OVER I 89

NOTES:

1. FOR BRIDGE NOS. 44N & 44S CONTAINMENT PLANS, SEE SHEETS C-11 THRU C-14.
2. FOR BRIDGE NOS. 45N & 45S CONTAINMENT PLANS, SEE SHEETS C-15 & C-17.

STATE OF VERMONT
PAUL R. STEIJLEN
NO. 107795
CIVIL
6/13/16
LICENSED
PROFESSIONAL ENGINEER

Bridge Nos. All

REVISIONS		
DATE	BY	DESCRIPTION

PAUL STEIJLEN P.E.
P.E. LICENSE NUMBER 107795
A2B ENGINEERING, LLC.
5406 N. HOOVER BLVD., SUITE 12
TAMPA, FL 33634

MONOKO, LLC.
1037 PENINSULA AVENUE
TARPON SPRINGS, FL 34689
PHONE (727) 940-3244
FAX (727) 279-8795

DRAWN BY: BDN 03/16
CHECKED BY: PDB 03/16
DESIGNED BY: MAT 03/16
CHECKED BY: PRS 03/16

VERMONT AGENCY OF TRANSPORTATION

ROAD NO.	COUNTY	PROJECT NO.
	WINDSOR	IM BPNT(13)

SHEET TITLE: EXISTING BRIDGE SUMMARY

PROJECT NAME: ELEVEN BRIDGES ON I-91

REF. DWG. NO.

SHEET NO. C-4

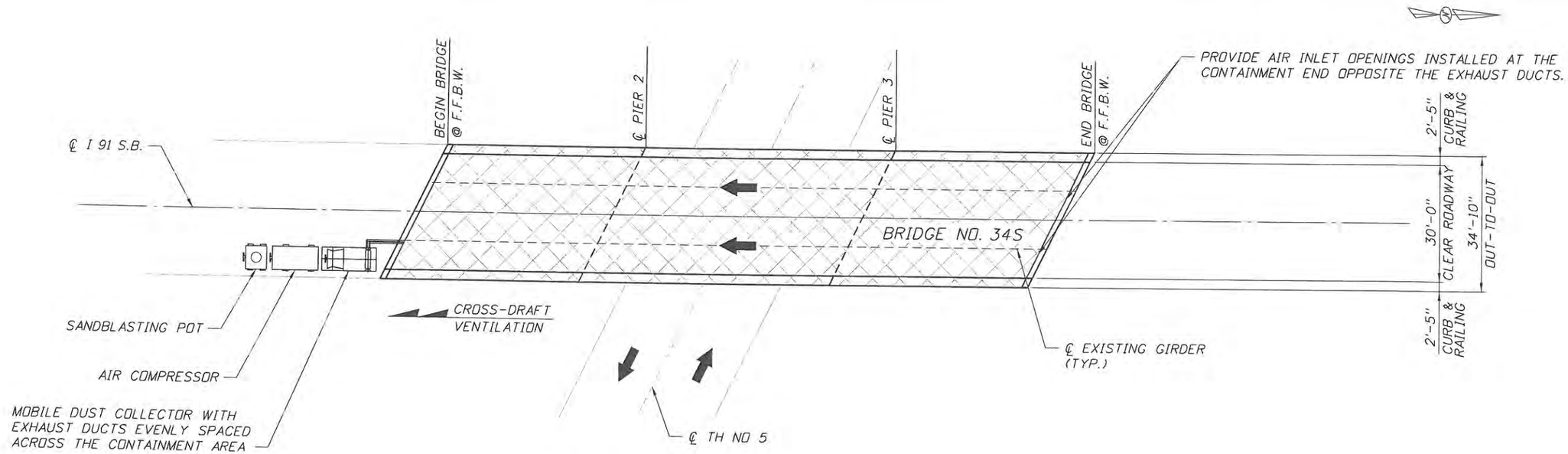

PLAN
(BRIDGE 34S SHOWN, BRIDGES 34N, 41N & 41S ARE SIMILAR)

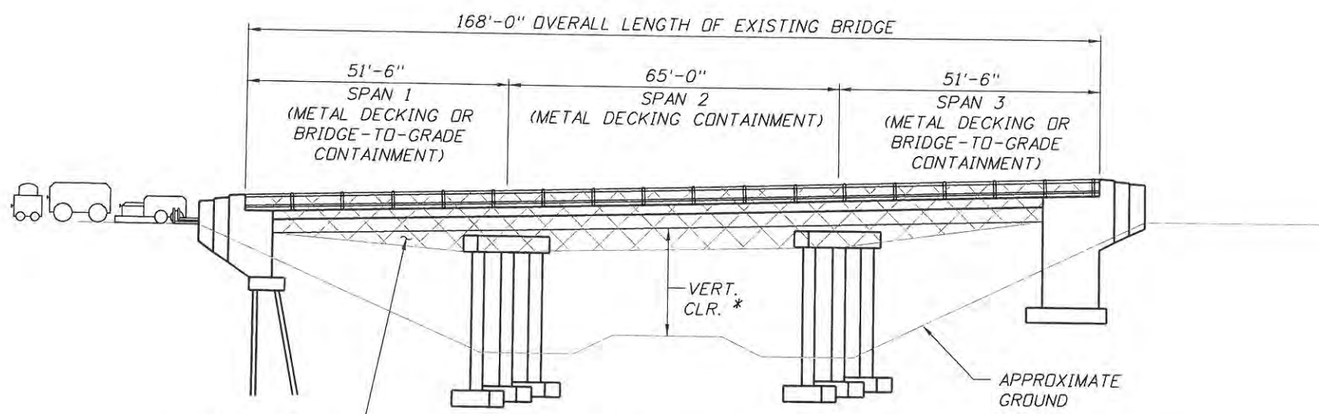

ELEVATION
(BRIDGE 34S SHOWN, BRIDGES 34N, 41N & 41S ARE SIMILAR)

NOTES:

1. THESE PLANS WERE PREPARED WITHOUT THE BENEFIT OF AS-BUILT BRIDGE PLANS. THE CONTRACTOR SHALL MAKE ALLOWANCE FOR BRIDGE ELEMENTS AND MODIFICATIONS NOT SHOWN ON THESE PLANS.
2. REFERENCE MOT PLANS FOR LIMITS OF WORK PHASES.
3. THE CONTRACTOR HAS THE OPTION TO USE ADDITIONAL MOBILE DUST COLLECTORS, OR PLACE LONGITUDINAL OR TRANSVERSE INTERMEDIATE TARPAULIN WALLS.
4. FOR ADDITIONAL DETAILS, SEE CONTAINMENT MISCELLANEOUS DETAILS SHEETS.

* CONTRACTOR SHALL VERIFY THAT SUFFICIENT VERTICAL CLEARANCE EXISTS FOR THE USE OF METAL DECKING CONTAINMENT.

STATE OF VERMONT
PAUL R. STEIJLEN
NO. 107795
CIVIL
LICENSED
PROFESSIONAL ENGINEER
6-13-16

Bridge Nos. 34N & 34S (I-91 over TH NO 5) (M.M. 57.40)
Bridge Nos. 41N & 41S (I-91 over Ramp C I-91) (M.M. 69.68)

REVISIONS		
DATE	BY	DESCRIPTION

PAUL STEIJLEN P.E.
P.E. LICENSE NUMBER 107795
A2B ENGINEERING, LLC.
5406 N. HOOVER BLVD., SUITE 12
TAMPA, FL 33634

MONOKO, LLC.
1037 PENINSULA AVENUE
TARPON SPRINGS, FL 34689
PHONE (727) 940-3244
FAX (727) 279-8795

DRAWN BY: BDN 03/16
CHECKED BY: PDB 03/16
DESIGNED BY: MAT 03/16
CHECKED BY: PRS 03/16

VERMONT AGENCY OF TRANSPORTATION

ROAD NO.	COUNTY	PROJECT NO.
	WINDSOR	IM BPNT(13)

SHEET TITLE: PLAN & ELEVATION
REF. DWG. NO.
PROJECT NAME: ELEVEN BRIDGES ON I-91
SHEET NO. C-5

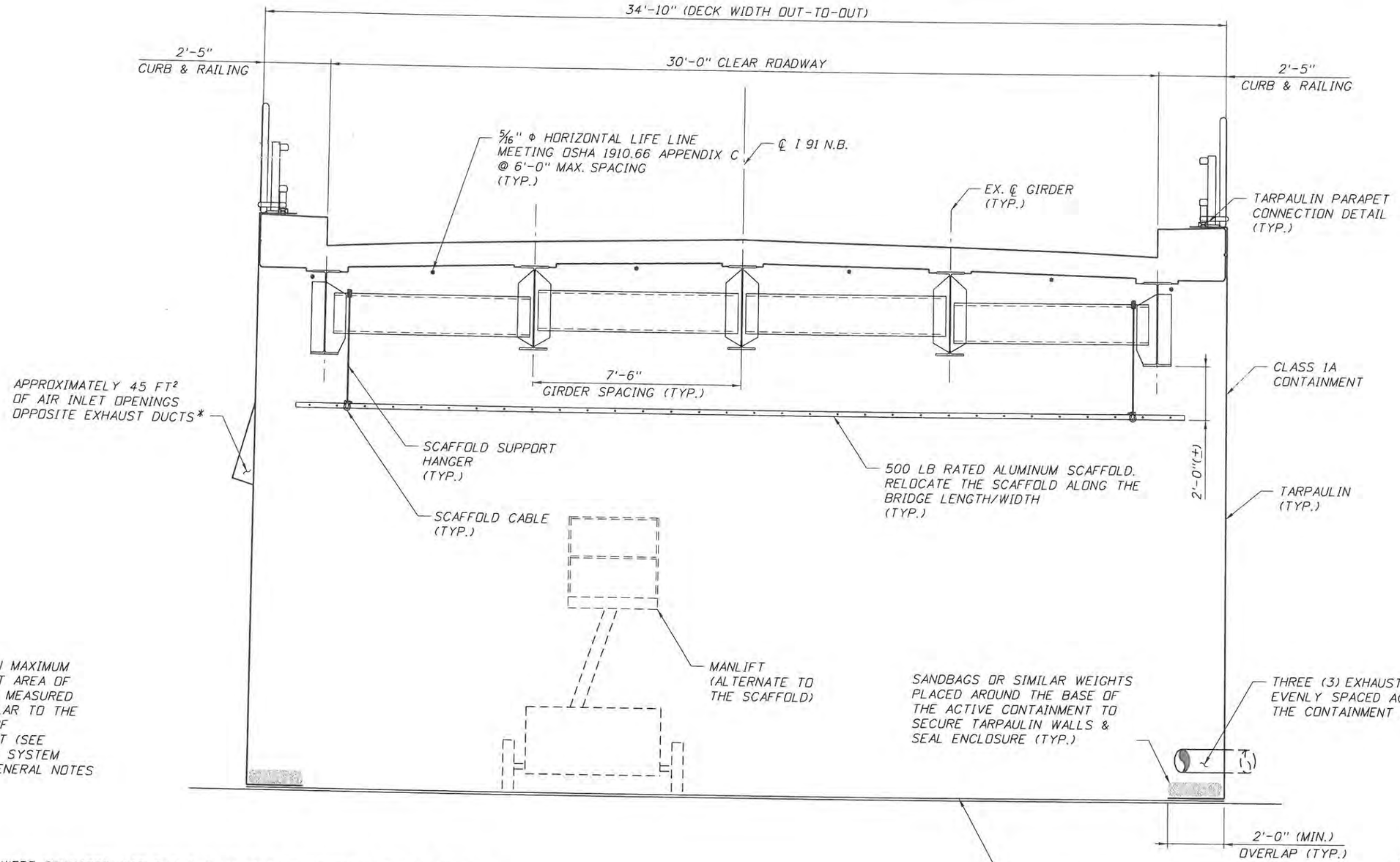

* BASED ON MAXIMUM CONTAINMENT AREA OF 450 FT² AS MEASURED PERPENDICULAR TO THE DIRECTION OF CROSS-DRAFT (SEE VENTILATION SYSTEM TABLE ON GENERAL NOTES SHEETS)

NOTES:

1. THESE PLANS WERE PREPARED WITHOUT THE BENEFIT OF AS-BUILT BRIDGE PLANS. THE CONTRACTOR SHALL MAKE ALLOWANCE FOR BRIDGE ELEMENTS AND MODIFICATIONS NOT SHOWN ON THESE PLANS.
2. THE CONTRACTOR SHALL AVOID ATTACHING/CONNECTING TO BRIDGE ELEMENTS EXHIBITING SIGNIFICANT SECTION LOSS.
3. FOR ADDITIONAL DETAILS, SEE CONTAINMENT MISCELLANEOUS DETAILS SHEETS.
4. INSPECTIONS SHALL BE PERFORMED FROM MANLIFT.
5. CONTRACTOR TO PROVIDE LIFE LINES MEETING OSHA 1910.66 APPENDIX C AS REQUIRED.
6. TARPS SHALL BE REMOVED DURING NON-WORKING HOURS.

BRIDGE TO GRADE TYPICAL SECTION

(AT END BENTS ONLY)
(MOBILE DUST COLLECTOR
NOT SHOWN FOR CLARITY)

STATE OF VERMONT
PAUL R. STEIJLEN
NO. 107795
CIVIL
6-13-16
LICENSED
PROFESSIONAL ENGINEER

Bridge Nos. 34N & 34S (I-91 over TH NO 5) (M.M. 57.40)
Bridge Nos. 41N & 41S (I-91 over Ramp C I-91) (M.M. 69.68)

REVISIONS		
DATE	BY	DESCRIPTION

PAUL STEIJLEN P.E.
P.E. LICENSE NUMBER 107795
A2B ENGINEERING, LLC.
5406 N. HOOVER BLVD., SUITE 12
TAMPA, FL 33634

MONOKO, LLC.
1037 PENINSULA AVENUE
TARPON SPRINGS, FL 34689
PHONE (727) 940-3244
FAX (727) 279-8795

DRAWN BY: BDN 03/16
CHECKED BY: PDB 03/16
DESIGNED BY: MAT 03/16
CHECKED BY: PRS 03/16

VERMONT
AGENCY OF TRANSPORTATION

ROAD NO.	COUNTY	PROJECT NO.
	WINDSOR	IM BPNT(13)

SHEET TITLE: CONTAINMENT SECTION DETAILS (1 OF 2)

REF. DWG. NO.

PROJECT NAME: ELEVEN BRIDGES ON I-91

SHEET NO. C-6

P:\187 Monoko, LLC\16 Windsor - Hartford\1 Containment Plans\Cadd\B34Typical01.dgn

Cad12 6/14/2016 7:19:15 AM

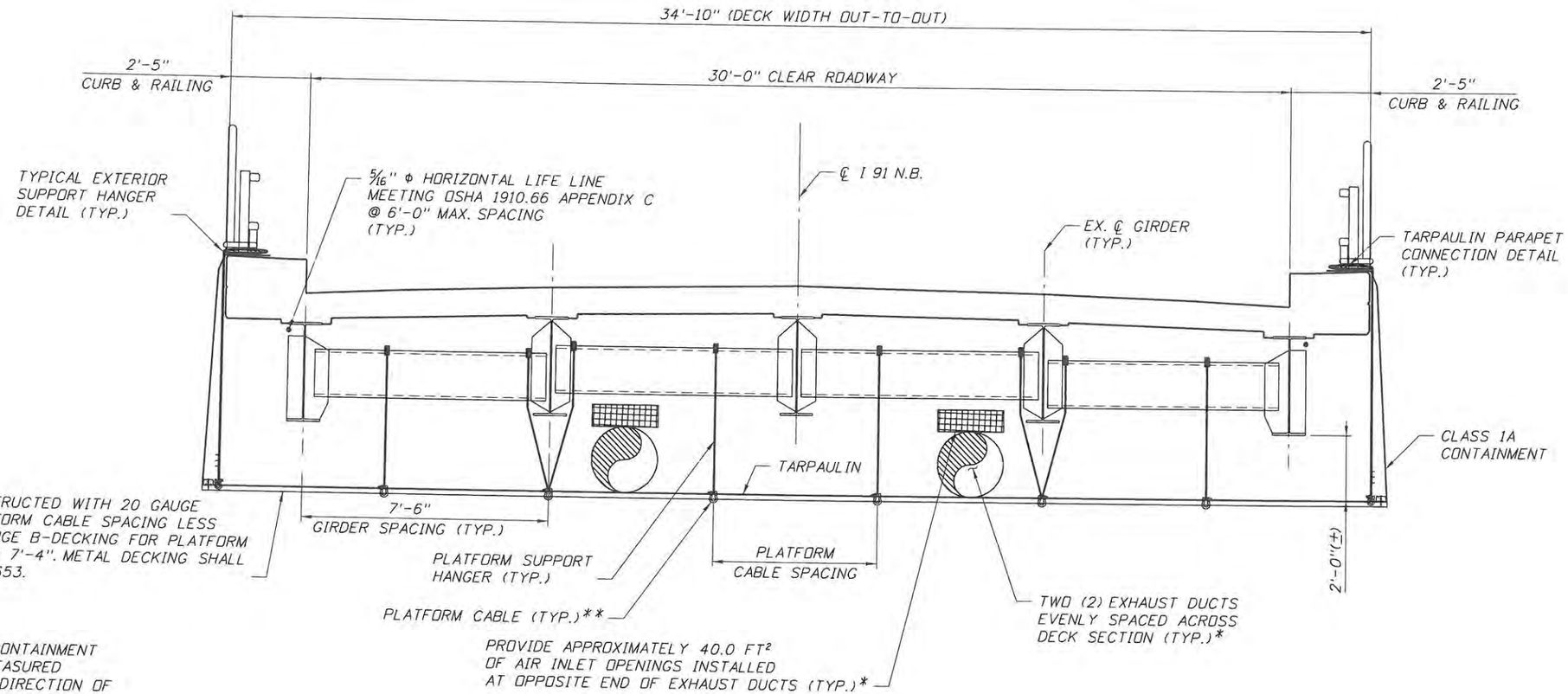

* BASED ON MAXIMUM CONTAINMENT AREA OF 240 FT² AS MEASURED PERPENDICULAR TO THE DIRECTION OF CROSS-DRAFT (SEE VENTILATION SYSTEM TABLE ON GENERAL NOTES SHEETS)

** PLATFORM CABLE SHALL BE RAISED AS NECESSARY TO PROVIDE MINIMUM VERTICAL CLEARANCE.

TYPICAL SECTION
(MOBILE DUST COLLECTOR NOT SHOWN FOR CLARITY)

NOTES:

1. THESE PLANS WERE PREPARED WITHOUT THE BENEFIT OF AS-BUILT BRIDGE PLANS. THE CONTRACTOR SHALL MAKE ALLOWANCE FOR BRIDGE ELEMENTS AND MODIFICATIONS NOT SHOWN ON THESE PLANS.
2. THE CONTRACTOR SHALL AVOID ATTACHING/CONNECTING TO BRIDGE ELEMENTS EXHIBITING SIGNIFICANT SECTION LOSS.
3. FOR ADDITIONAL DETAILS, SEE CONTAINMENT MISCELLANEOUS DETAILS SHEETS.
4. INSPECTIONS SHALL BE PERFORMED FROM MANLIFT.
5. CONTRACTOR TO PROVIDE LIFE LINES MEETING OSHA 1910.66 APPENDIX C AS REQUIRED.
6. TARPS SHALL BE REMOVED DURING NON-WORKING HOURS.

STATE OF VERMONT
PAUL R. STEIJLEN
NO. 107957
CIVIL
LICENSED
PROFESSIONAL ENGINEER
6/13/16

Bridge Nos. 34N & 34S (I-91 over TH NO 5) (M.M. 57.40)
Bridge Nos. 41N & 41S (I-91 over Ramp C I-91) (M.M. 69.68)

REVISIONS		
DATE	BY	DESCRIPTION

PAUL STEIJLEN P.E.
P.E. LICENSE NUMBER 107795
A2B ENGINEERING, LLC.
5406 N. HOOVER BLVD., SUITE 12
TAMPA, FL 33634

MONOKO, LLC.
1037 PENINSULA AVENUE
TARPON SPRINGS, FL 34689
PHONE (727) 940-3244
FAX (727) 279-8795

DRAWN BY: BDN 03/16
CHECKED BY: PDB 03/16
DESIGNED BY: MAT 03/16
CHECKED BY: PRS 03/16

VERMONT AGENCY OF TRANSPORTATION

ROAD NO.	COUNTY	PROJECT NO.
	WINDSOR	IM BPNT(13)

SHEET TITLE: CONTAINMENT SECTION DETAILS (2 OF 2)

REF. DWG. NO.

PROJECT NAME: ELEVEN BRIDGES ON I-91

SHEET NO. C-7

P:\187 Monoko, LLC\18 Windsor - Hartford\1 Containment Plans\Cadd\B34Typical02.dgn

Cad12 6/14/2016 7:19:18 AM

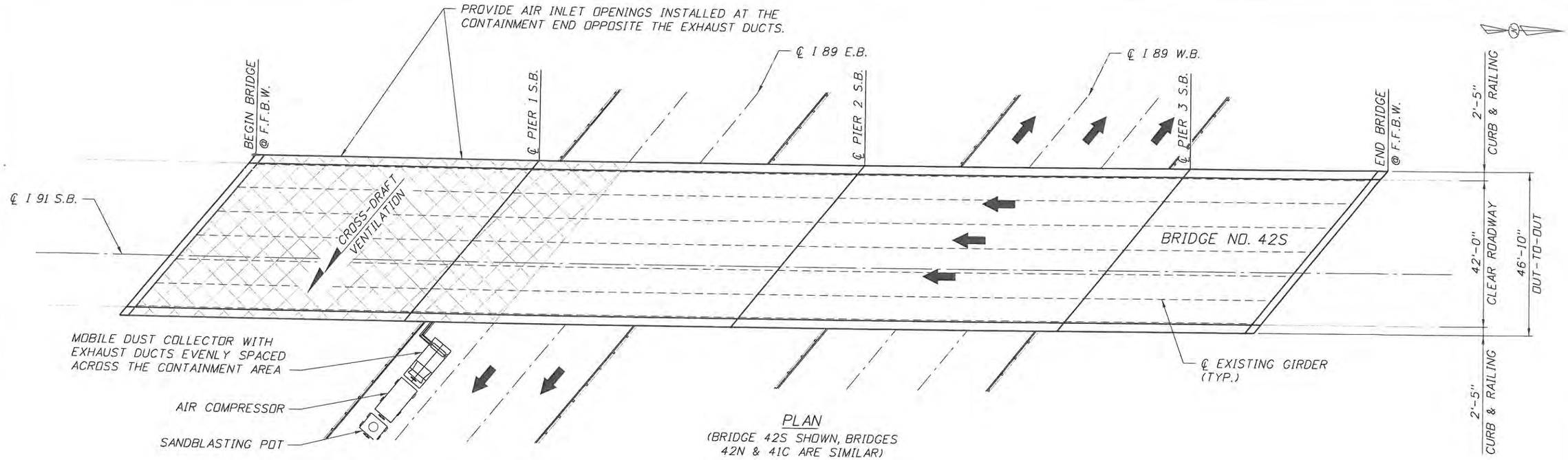

PLAN
(BRIDGE 42S SHOWN, BRIDGES 42N & 41C ARE SIMILAR)

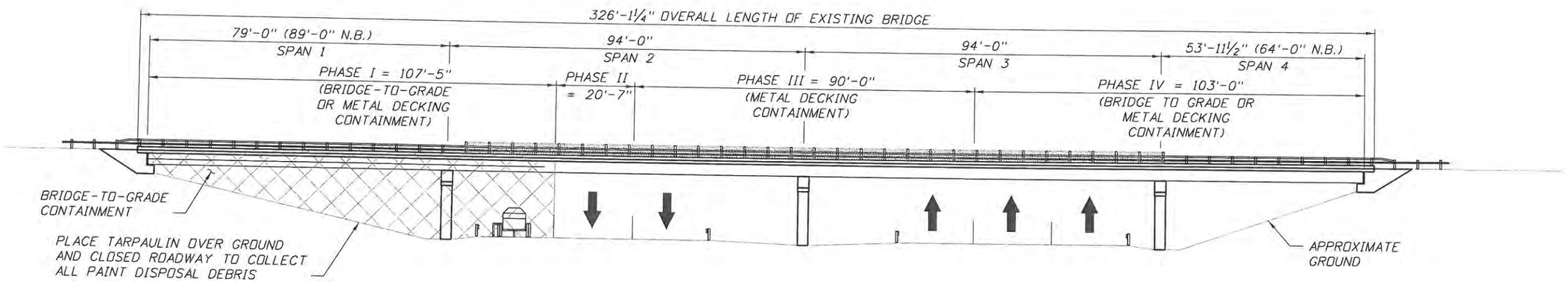

ELEVATION
(BRIDGE 42S SHOWN, BRIDGES 42N & 41C ARE SIMILAR)

NOTES:

1. THESE PLANS WERE PREPARED WITHOUT THE BENEFIT OF AS-BUILT BRIDGE PLANS. THE CONTRACTOR SHALL MAKE ALLOWANCE FOR BRIDGE ELEMENTS AND MODIFICATIONS NOT SHOWN ON THESE PLANS.
2. REFERENCE MOT PLANS FOR LIMITS OF WORK PHASES.
3. WORK PHASES MAY BE WORKED IN ANY ORDER AT THE CONVENIENCE OF THE CONTRACTOR'S MEANS AND METHODS, TRAFFIC PATTERNS AND DENSITY, OR OTHER SITE CHARACTERISTICS THAT INFLUENCE A PREFERRED WORK AREA.
4. THE CONTRACTOR HAS THE OPTION TO USE ADDITIONAL MOBILE DUST COLLECTORS, OR PLACE LONGITUDINAL OR TRANSVERSE INTERMEDIATE TARPAULIN WALLS.
5. FOR ADDITIONAL DETAILS, SEE CONTAINMENT MISCELLANEOUS DETAILS SHEETS.

STATE OF VERMONT
PAUL R. STEIJLEN
NO. 10779
CIVIL
6-13-16
LICENSED PROFESSIONAL ENGINEER

Bridge No. 41C (I-91 Ramp C over I-89) (M.M. 69.51)
Bridge Nos. 42N & 42S (I-91 over I-89) (M.M. 69.81)

REVISIONS		
DATE	BY	DESCRIPTION

PAUL STEIJLEN P.E.
P.E. LICENSE NUMBER 107795
A2B ENGINEERING, LLC.
5406 N. HOOVER BLVD., SUITE 12
TAMPA, FL 33634

MONOKO, LLC.
1037 PENINSULA AVENUE
TARPON SPRINGS, FL 34689
PHONE (727) 940-3244
FAX (727) 279-8795

DRAWN BY: BDN 03/16
CHECKED BY: PDB 03/16
DESIGNED BY: MAT 03/16
CHECKED BY: PRS 03/16

VERMONT AGENCY OF TRANSPORTATION

ROAD NO.	COUNTY	PROJECT NO.
	WINDSOR	IM BPNT(13)

SHEET TITLE: PLAN & ELEVATION

REF. DWG. NO.

PROJECT NAME: ELEVEN BRIDGES ON I-91

SHEET NO. C-8

P:\187 Monoko, LLC\18 Windsor - Hartford\1 Containment Plans\Cadd\B42PlanElev.dgn

Cadd12 6/14/2016 7:19:21 AM

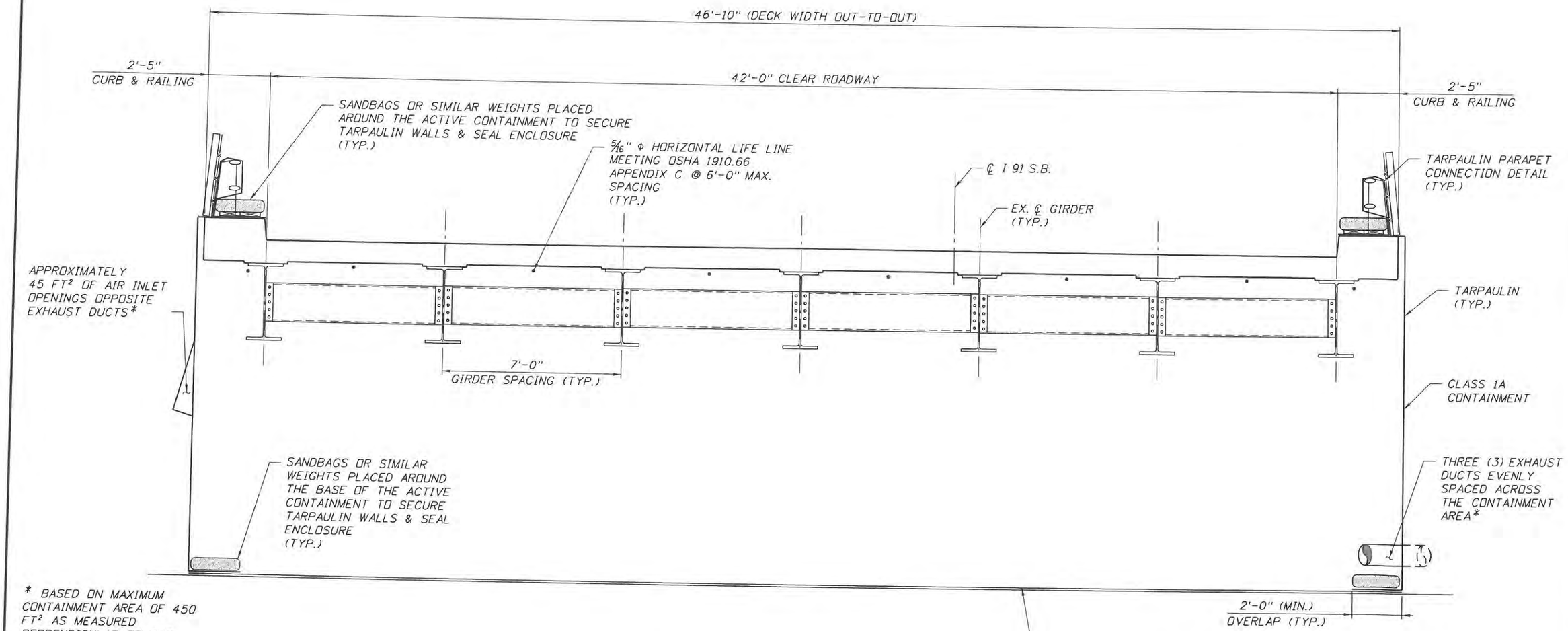

* BASED ON MAXIMUM CONTAINMENT AREA OF 450 FT² AS MEASURED PERPENDICULAR TO THE DIRECTION OF CROSS-DRAFT (SEE VENTILATION SYSTEM TABLE ON GENERAL NOTES SHEETS)

BRIDGE TO GRADE TYPICAL SECTION

(AT END BENTS ONLY)
(MOBILE DUST COLLECTOR NOT SHOWN FOR CLARITY)

NOTES:

1. THESE PLANS WERE PREPARED WITHOUT THE BENEFIT OF AS-BUILT BRIDGE PLANS. THE CONTRACTOR SHALL MAKE ALLOWANCE FOR BRIDGE ELEMENTS AND MODIFICATIONS NOT SHOWN ON THESE PLANS.
2. THE CONTRACTOR SHALL AVOID ATTACHING/CONNECTING TO BRIDGE ELEMENTS EXHIBITING SIGNIFICANT SECTION LOSS.
3. FOR ADDITIONAL DETAILS, SEE CONTAINMENT MISCELLANEOUS DETAILS SHEETS.
4. CONTRACTOR TO PROVIDE LIFE LINES MEETING OSHA 1910.66 APPENDIX C AS REQUIRED.
5. TARPS SHALL BE REMOVED DURING NON-WORKING HOURS.

STATE OF VERMONT
PAUL R. STEIJLEN
NO. 107795
CIVIL
LICENSED
PROFESSIONAL ENGINEER
6/13/16

Bridge No. 41C (I-91 Ramp C over I-89) (M.M. 69.51)
Bridge Nos. 42N & 42S (I-91 over I-89) (M.M. 69.81)

REVISIONS		
DATE	BY	DESCRIPTION

PAUL STEIJLEN P.E.
P.E. LICENSE NUMBER 107795
A2B ENGINEERING, LLC.
5406 N. HOOVER BLVD., SUITE 12
TAMPA, FL 33634

MONOKO, LLC.
1037 PENINSULA AVENUE
TARPON SPRINGS, FL 34689
PHONE (727) 940-3244
FAX (727) 279-8795

DRAWN BY:	CHECKED BY:	DESIGNED BY:	CHECKED BY:
BDN 03/16	PDB 03/16	MAT 03/16	PRS 03/16

VERMONT AGENCY OF TRANSPORTATION

ROAD NO.	COUNTY	PROJECT NO.
	WINDSOR	IM BPNT(13)

SHEET TITLE: CONTAINMENT SECTION DETAILS (1 OF 3)

PROJECT NAME: ELEVEN BRIDGES ON I-91

REF. DWG. NO.

SHEET NO. C-9

P:\187 Monoko, LLC\18 Windsor - Hartford\1 Containment Plans\Cadd\B42Typical01.dgn

Cadd2

6/14/2016 7:19:24 AM

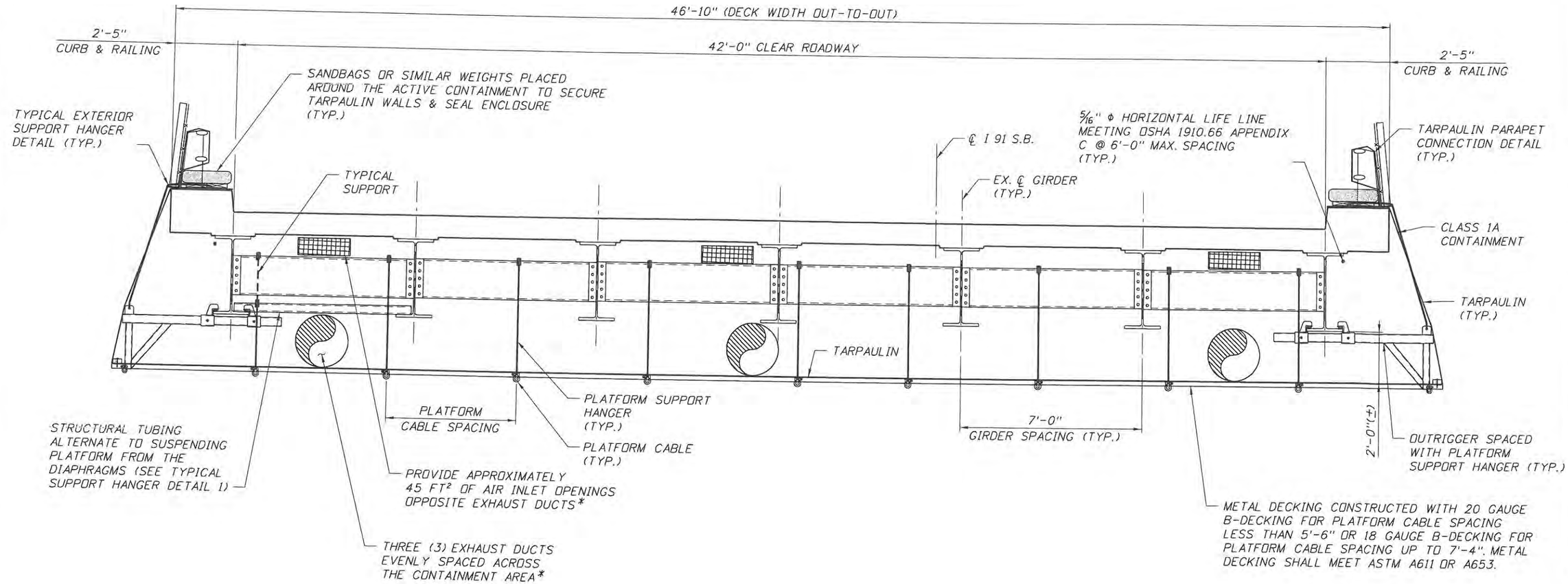

* BASED ON MAXIMUM CONTAINMENT AREA OF 285 FT² AS MEASURED PERPENDICULAR TO THE DIRECTION OF CROSS-DRAFT (SEE VENTILATION SYSTEM TABLE ON GENERAL NOTES SHEETS)

TYPICAL SECTION

(11 PLATFORM CABLES)
(MOBILE DUST COLLECTOR NOT SHOWN FOR CLARITY)

NOTES:

1. THESE PLANS WERE PREPARED WITHOUT THE BENEFIT OF AS-BUILT BRIDGE PLANS. THE CONTRACTOR SHALL MAKE ALLOWANCE FOR BRIDGE ELEMENTS AND MODIFICATIONS NOT SHOWN ON THESE PLANS.
2. THE CONTRACTOR SHALL AVOID ATTACHING/CONNECTING TO BRIDGE ELEMENTS EXHIBITING SIGNIFICANT SECTION LOSS.
3. FOR ADDITIONAL DETAILS, SEE CONTAINMENT MISCELLANEOUS DETAILS SHEETS.
4. CONTRACTOR TO PROVIDE LIFE LINES MEETING OSHA 1910.66 APPENDIX C AS REQUIRED.

STATE OF VERMONT
PAUL R. STEIJLEN
NO. 10779
CIVIL
LICENSED
PROFESSIONAL ENGINEER

Bridge No. 41C (I-91 Ramp C over I-89) (M.M. 69.51)
Bridge Nos. 42N & 42S (I-91 over I-89) (M.M. 69.81)

REVISIONS		
DATE	BY	DESCRIPTION

PAUL STEIJLEN P.E.
P.E. LICENSE NUMBER 107795
A2B ENGINEERING, LLC.
5406 N. HOOVER BLVD., SUITE 12
TAMPA, FL 33634

MONOKO, LLC.
1037 PENINSULA AVENUE
TARPON SPRINGS, FL 34689
PHONE (727) 940-3244
FAX (727) 279-8795

DRAWN BY: BDN 03/16
CHECKED BY: PDB 03/16
DESIGNED BY: MAT 03/16
CHECKED BY: PRS 03/16

VERMONT AGENCY OF TRANSPORTATION

ROAD NO.	COUNTY	PROJECT NO.
	WINDSOR	IM BPNT(13)

SHEET TITLE: CONTAINMENT SECTION DETAILS (2 OF 3)

PROJECT NAME: ELEVEN BRIDGES ON I-91

REF. DWG. NO.

SHEET NO. C-10

P:\187 Monoko, LLC\18 Windsor - Hartford\1 Containment Plans\Cadd\B42Typical02.dgn

Cad12 6/14/2016 7:19:27 AM

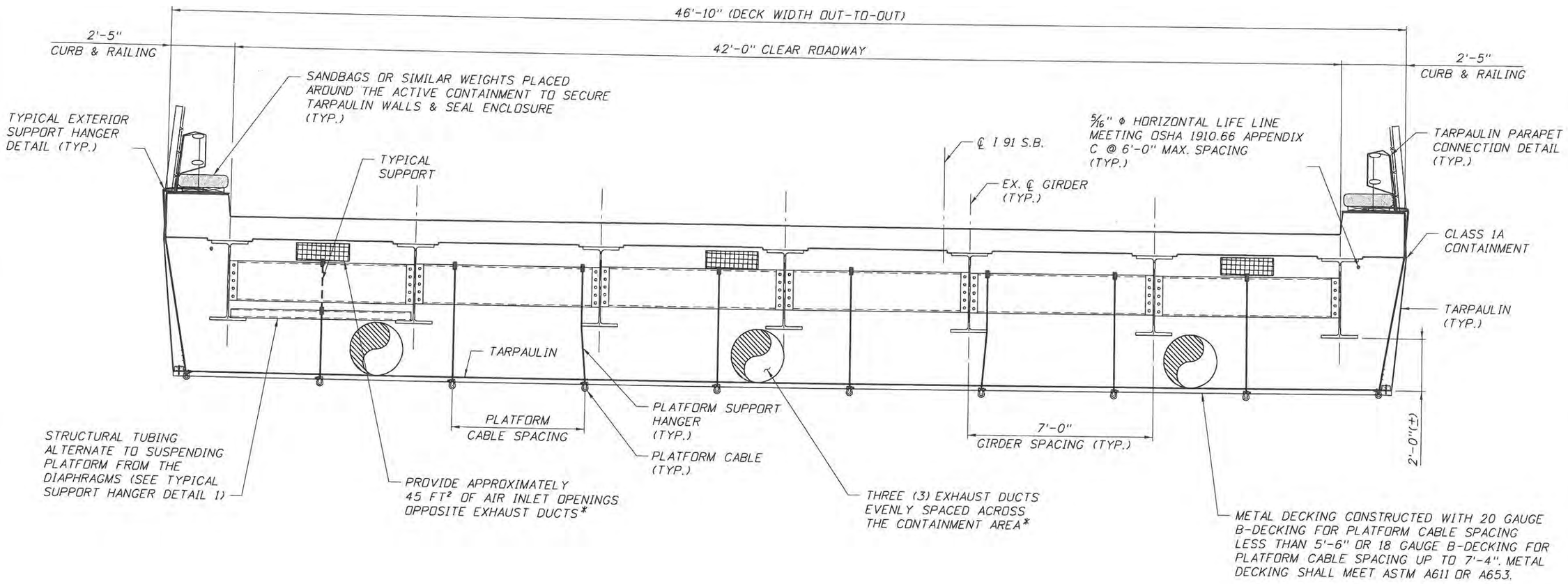

* BASED ON MAXIMUM CONTAINMENT AREA OF 285 FT² AS MEASURED PERPENDICULAR TO THE DIRECTION OF CROSS-DRAFT (SEE VENTILATION SYSTEM TABLE ON GENERAL NOTES SHEETS)

ALTERNATE TYPICAL SECTION

(10 PLATFORM CABLES)
(MOBILE DUST COLLECTOR NOT SHOWN FOR CLARITY)

NOTES:

1. THESE PLANS WERE PREPARED WITHOUT THE BENEFIT OF AS-BUILT BRIDGE PLANS. THE CONTRACTOR SHALL MAKE ALLOWANCE FOR BRIDGE ELEMENTS AND MODIFICATIONS NOT SHOWN ON THESE PLANS.
2. THE CONTRACTOR SHALL AVOID ATTACHING/CONNECTING TO BRIDGE ELEMENTS EXHIBITING SIGNIFICANT SECTION LOSS.
3. FOR ADDITIONAL DETAILS, SEE CONTAINMENT MISCELLANEOUS DETAILS SHEETS.
4. CONTRACTOR TO PROVIDE LIFE LINES MEETING OSHA 1910.66 APPENDIX C AS REQUIRED.

STATE OF VERMONT
PAUL R. STEIJLEN
NO. 107795
CIVIL
6-13-16
LICENSED
PROFESSIONAL ENGINEER

Bridge No. 41C (I-91 Ramp C over I-89) (M.M. 69.51)
Bridge Nos. 42N & 42S (I-91 over I-89) (M.M. 69.81)

REVISIONS		
DATE	BY	DESCRIPTION

PAUL STEIJLEN P.E.
P.E. LICENSE NUMBER 107795
A2B ENGINEERING, LLC.
5406 N. HOOVER BLVD., SUITE 12
TAMPA, FL 33634

MONOKO, LLC.
1037 PENINSULA AVENUE
TARPON SPRINGS, FL 34689
PHONE (727) 940-3244
FAX (727) 279-8795

DRAWN BY: BDN 03/16
CHECKED BY: PDB 03/16
DESIGNED BY: MAT 03/16
CHECKED BY: PRS 03/16

VERMONT AGENCY OF TRANSPORTATION

ROAD NO.	COUNTY	PROJECT NO.
	WINDSOR	IM BPNT(13)

SHEET TITLE: CONTAINMENT SECTION DETAILS (3 OF 3)

REF. DWG. NO.

PROJECT NAME: ELEVEN BRIDGES ON I-91

SHEET NO. C-11

NOT USED

STATE OF VERMONT
PAUL R. STEIJLEN
NO. 107795
CIVIL
LICENSED
PROFESSIONAL ENGINEER

Bridge Nos. 44N & 44S (I-91 over US 4, VT 14, NECR, White River) (M.M. 70.94)

REVISIONS		
DATE	BY	DESCRIPTION

PAUL STEIJLEN P.E.
P.E. LICENSE NUMBER 107795
A2B ENGINEERING, LLC.
5406 N. HOOVER BLVD., SUITE 12
TAMPA, FL 33634

MONOKO, LLC.
1037 PENINSULA AVENUE
TARPON SPRINGS, FL 34689
PHONE (727) 940-3244
FAX (727) 279-8795

DRAWN BY:	CHECKED BY:	DESIGNED BY:	CHECKED BY:
BDN 03/16	PDB 03/16	MAT 03/16	PRS 03/16

VERMONT
AGENCY OF TRANSPORTATION

ROAD NO.	COUNTY	PROJECT NO.
	WINDSOR	IM BPNT(13)

SHEET TITLE: NOT USED

PROJECT NAME: ELEVEN BRIDGES ON I-91

REF. DWG. NO.

SHEET NO. C-12

P:\187 Monoko, LLC\18 Windsor - Hartford\1 Containment Plans\Cadd\B44PlanElev01.dgn

Cad12 6/14/2016 7:19:33 AM

NOT USED

STATE OF VERMONT
PAUL R. STEIJLEN
NO. 107795
CIVIL
LICENSED
PROFESSIONAL ENGINEER
6-15-16

Bridge Nos. 44N & 44S (I-91 over US 4, VT 14, NECR, White River) (M.M. 70.94)

REVISIONS		
DATE	BY	DESCRIPTION

PAUL STEIJLEN P.E.
P.E. LICENSE NUMBER 107795
A2B ENGINEERING, LLC.
5406 N. HOOVER BLVD., SUITE 12
TAMPA, FL 33634

MONOKO, LLC.
1037 PENINSULA AVENUE
TARPON SPRINGS, FL 34689
PHONE (727) 940-3244
FAX (727) 279-8795

DRAWN BY: BDN 03/16
CHECKED BY: PDB 03/16
DESIGNED BY: MAT 03/16
CHECKED BY: PRS 03/16

VERMONT
AGENCY OF TRANSPORTATION

ROAD NO.	COUNTY	PROJECT NO.
	WINDSOR	IM BPNT(13)

SHEET TITLE: NOT USED

PROJECT NAME: ELEVEN BRIDGES ON I-91

REF. DWG. NO.

SHEET NO. C-13

P:\187 Monoko, LLC\18 Windsor - Hartford\1 Containment Plans\Cadd\B44PlanElev02.dgn

Cad12 6/14/2016 7:19:37 AM

NOT USED

STATE OF VERMONT
PAUL R. STEIJLEN
NO. 107795
CIVIL
LICENSED
PROFESSIONAL ENGINEER
5-16

Bridge Nos. 44N & 44S (I-91 over US 4, VT 14, NECR, White River) (M.M. 70.94)

REVISIONS		
DATE	BY	DESCRIPTION

PAUL STEIJLEN P.E.
P.E. LICENSE NUMBER 107795
A2B ENGINEERING, LLC.
5406 N. HOOVER BLVD., SUITE 12
TAMPA, FL 33634

MONOKO, LLC.
1037 PENINSULA AVENUE
TARPON SPRINGS, FL 34689
PHONE (727) 940-3244
FAX (727) 279-8795

DRAWN BY: BDN 03/16
CHECKED BY: PDB 03/16
DESIGNED BY: MAT 03/16
CHECKED BY: PRS 03/16

VERMONT
AGENCY OF TRANSPORTATION

ROAD NO.	COUNTY	PROJECT NO.
	WINDSOR	IM BPNT(13)

SHEET TITLE: NOT USED

REF. DWG. NO.

PROJECT NAME: ELEVEN BRIDGES ON I-91

SHEET NO. C-14

P:\187 Monoko, LLC\18 Windsor - Hartford\1 Containment Plans\Cadd\B44Typical01.dgn

Cad12

6/14/2016 7:19:40 AM

NOT USED

STATE OF VERMONT
PAUL R. STEIJLEN
NO. 107795
CIVIL
LICENSED
PROFESSIONAL ENGINEER
6/13/16

REVISIONS		
DATE	BY	DESCRIPTION

PAUL STEIJLEN P.E.
P.E. LICENSE NUMBER 107795
A2B ENGINEERING, LLC.
5406 N. HOOVER BLVD., SUITE 12
TAMPA, FL 33634

MONOKO, LLC.
1037 PENINSULA AVENUE
TARPON SPRINGS, FL 34689
PHONE (727) 940-3244
FAX (727) 279-8795

Bridge Nos. 44N & 44S (I-91 over US 4, VT 14, NECR, White River) (M.M. 70.94)

DRAWN BY:	CHECKED BY:	DESIGNED BY:	CHECKED BY:
BDN 03/16	PDB 03/16	MAT 03/16	PRS 03/16

VERMONT
AGENCY OF TRANSPORTATION

ROAD NO.	COUNTY	PROJECT NO.
	WINDSOR	IM BPNT(13)

SHEET TITLE: NOT USED

REF. DWG. NO.

PROJECT NAME: ELEVEN BRIDGES ON I-91

SHEET NO. C-15

P:\187 Monoko, LLC\18 Windsor - Hartford\1 Containment Plans\Cadd\B44Typical02.dgn

Cad12 6/14/2016 7:19:43 AM

NOT USED

STATE OF VERMONT
PAUL R. STEIJLEN
NO. 107795
CIVIL
LICENSED
PROFESSIONAL ENGINEER

Bridge Nos. 44N & 44S (I-91 over US 4, VT 14, NECR, White River) (M.M. 70.94)

REVISIONS		
DATE	BY	DESCRIPTION

PAUL STEIJLEN P.E.
P.E. LICENSE NUMBER 107795
A2B ENGINEERING, LLC.
5406 N. HOOVER BLVD., SUITE 12
TAMPA, FL 33634

MONOKO, LLC.
1037 PENINSULA AVENUE
TARPON SPRINGS, FL 34689
PHONE (727) 940-3244
FAX (727) 279-8795

DRAWN BY: BDN 03/16
CHECKED BY: PDB 03/16
DESIGNED BY: MAT 03/16
CHECKED BY: PRS 03/16

VERMONT
AGENCY OF TRANSPORTATION

ROAD NO.	COUNTY	PROJECT NO.
	WINDSOR	IM BPNT(13)

SHEET TITLE: NOT USED

PROJECT NAME: ELEVEN BRIDGES ON I-91

REF. DWG. NO.

SHEET NO. C-16

P:\187 Monoko, LLC\18 Windsor - Hartford\1 Containment Plans\Cadd\B44Typical03.dgn

Cad12 6/14/2016 7:19:46 AM

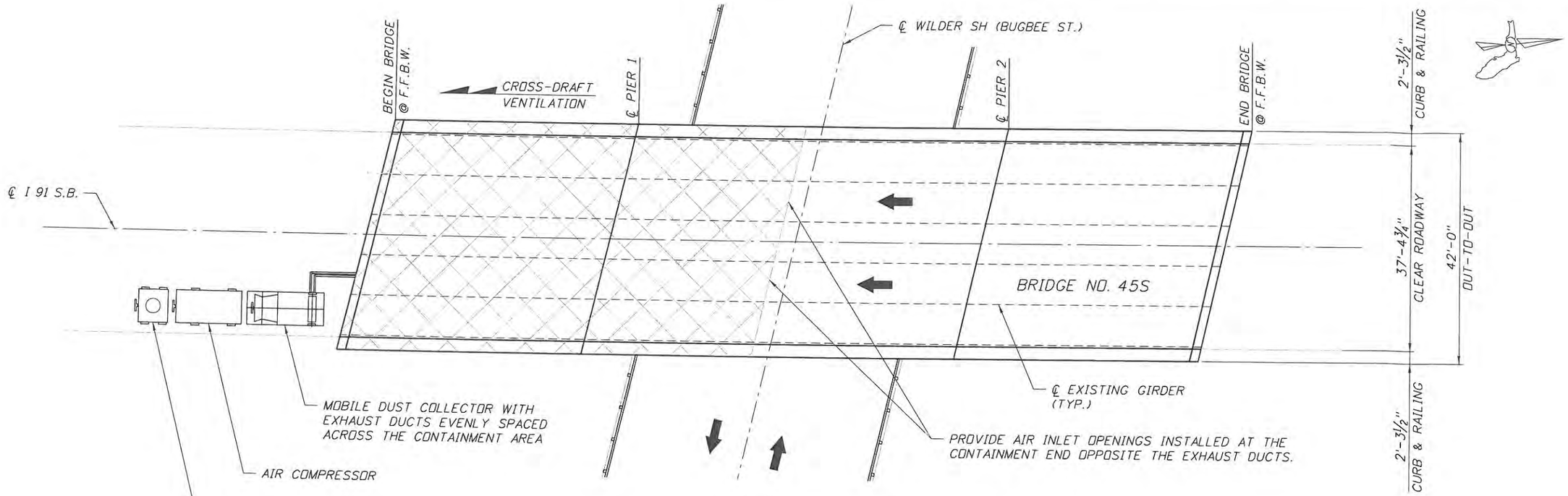

PLAN
(BRIDGE 45S SHOWN, BRIDGE 45N IS SIMILAR)

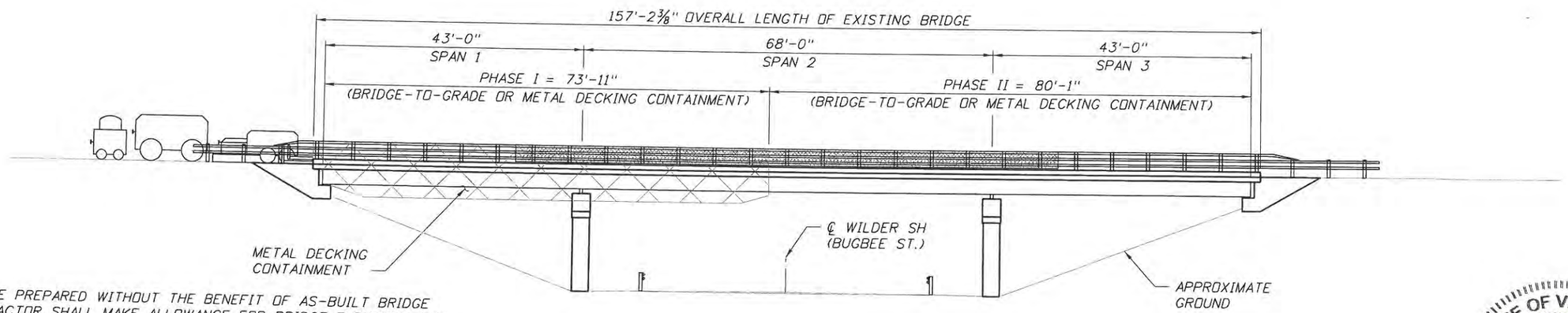

ELEVATION
(BRIDGE 45S SHOWN, BRIDGE 45N IS SIMILAR)

NOTES:

1. THESE PLANS WERE PREPARED WITHOUT THE BENEFIT OF AS-BUILT BRIDGE PLANS. THE CONTRACTOR SHALL MAKE ALLOWANCE FOR BRIDGE ELEMENTS AND MODIFICATIONS NOT SHOWN ON THESE PLANS.
2. REFERENCE MOT PLANS FOR LIMITS OF WORK PHASES.
3. WORK PHASES MAY BE WORKED IN ANY ORDER AT THE CONVENIENCE OF THE CONTRACTOR'S MEANS AND METHODS, TRAFFIC PATTERNS AND DENSITY, OR OTHER SITE CHARACTERISTICS THAT INFLUENCE A PREFERRED WORK AREA.
4. THE CONTRACTOR HAS THE OPTION TO USE ADDITIONAL MOBILE DUST COLLECTORS, OR PLACE LONGITUDINAL OR TRANSVERSE INTERMEDIATE TARPAULIN WALLS.
5. FOR ADDITIONAL DETAILS, SEE CONTAINMENT MISCELLANEOUS DETAILS SHEETS.

STATE OF VERMONT
PAUL R. STEIJLEN
NO. 107795
LICENSED
PROFESSIONAL ENGINEER
6-14-16

Bridge Nos. 45N & 45S (I-91 over Wilder SH) (M.M. 72.01)

REVISIONS		
DATE	BY	DESCRIPTION

PAUL STEIJLEN P.E.
P.E. LICENSE NUMBER 107795
A2B ENGINEERING, LLC.
5406 N. HOOVER BLVD., SUITE 12
TAMPA, FL 33634

MONOKO, LLC.
1037 PENINSULA AVENUE
TARPON SPRINGS, FL 34689
PHONE (727) 940-3244
FAX (727) 279-8795

DRAWN BY: BDN 03/16
CHECKED BY: PDB 03/16
DESIGNED BY: MAT 03/16
CHECKED BY: PRS 03/16

VERMONT AGENCY OF TRANSPORTATION

ROAD NO.	COUNTY	PROJECT NO.
	WINDSOR	IM BPNT(13)

SHEET TITLE: PLAN & ELEVATION

PROJECT NAME: ELEVEN BRIDGES ON I-91

REF. DWG. NO.

SHEET NO. C-17

P:\187 Monoko, LLC\18 Windsor - Hartford\I Containment Plans\Cadd\B45PlanElev.dgn

Cad12 6/14/2016 7:19:49 AM

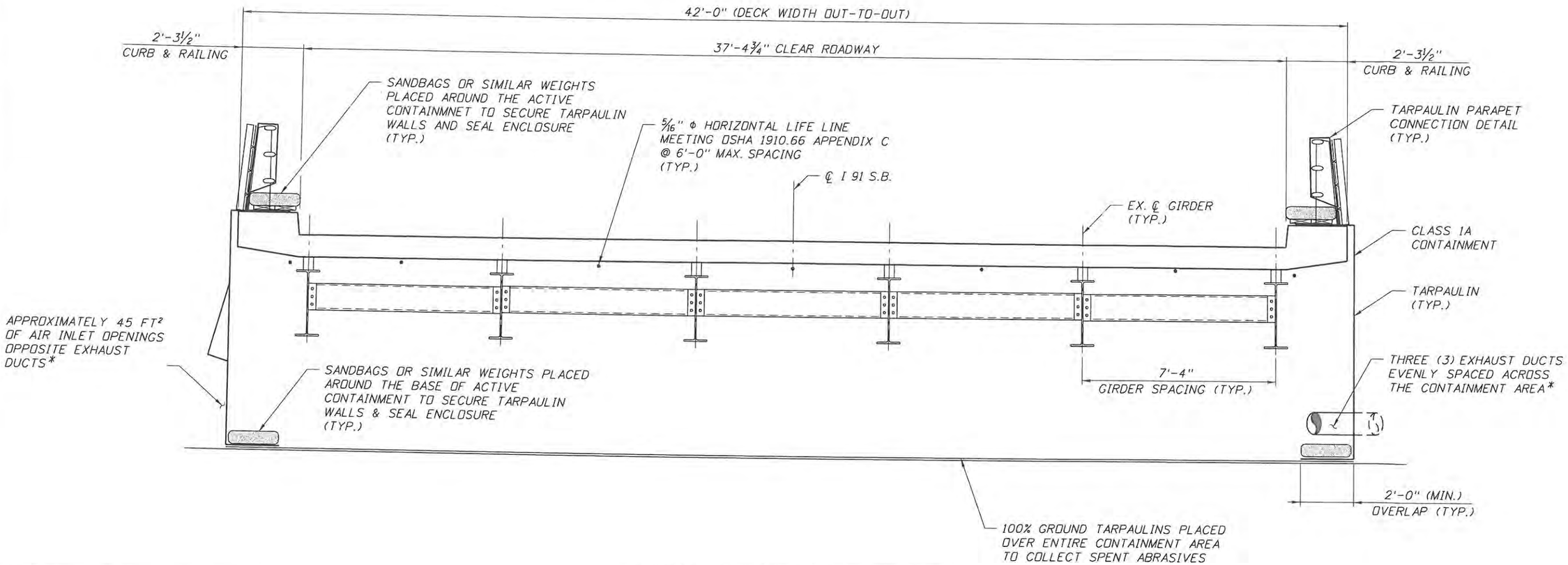

BRIDGE TO GRADE TYPICAL SECTION

(AT END BENTS ONLY)
(MOBILE DUST COLLECTOR NOT SHOWN FOR CLARITY)

* BASED ON MAXIMUM CONTAINMENT AREA OF 450 FT² AS MEASURED PERPENDICULAR TO THE DIRECTION OF CROSS-DRAFT (SEE VENTILATION SYSTEM TABLE ON GENERAL NOTES SHEETS)

NOTES:

1. THESE PLANS WERE PREPARED WITHOUT THE BENEFIT OF AS-BUILT BRIDGE PLANS. THE CONTRACTOR SHALL MAKE ALLOWANCE FOR BRIDGE ELEMENTS AND MODIFICATIONS NOT SHOWN ON THESE PLANS.
2. THE CONTRACTOR SHALL AVOID ATTACHING/CONNECTING TO BRIDGE ELEMENTS EXHIBITING SIGNIFICANT SECTION LOSS.
3. FOR ADDITIONAL DETAILS, SEE CONTAINMENT MISCELLANEOUS DETAILS SHEETS.
4. CONTRACTOR TO PROVIDE LIFE LINES MEETING OSHA 1910.66 APPENDIX C AS REQUIRED.
5. TARPS SHALL BE REMOVED DURING NON-WORKING HOURS.

STATE OF VERMONT
PAUL R. STEIJLEN
NO. 107795
CIVIL
LICENSED
PROFESSIONAL ENGINEER
6-13-16

Bridge Nos. 45N & 45S (I-91 over Wilder SH) (M.M. 72.01)

REVISIONS		
DATE	BY	DESCRIPTION

PAUL STEIJLEN P.E.
P.E. LICENSE NUMBER 107795
A2B ENGINEERING, LLC.
5406 N. HOOVER BLVD., SUITE 12
TAMPA, FL 33634

MONOKO, LLC.
1037 PENINSULA AVENUE
TARPON SPRINGS, FL 34689
PHONE (727) 940-3244
FAX (727) 279-8795

DRAWN BY: BDN 03/16
CHECKED BY: PDB 03/16
DESIGNED BY: MAT 03/16
CHECKED BY: PRS 03/16

VERMONT AGENCY OF TRANSPORTATION

ROAD NO.	COUNTY	PROJECT NO.
	WINDSOR	IM BPNT(13)

SHEET TITLE: CONTAINMENT SECTION DETAILS (1 OF 3)

REF. DWG. NO.

PROJECT NAME: ELEVEN BRIDGES ON I-91

SHEET NO. C-18

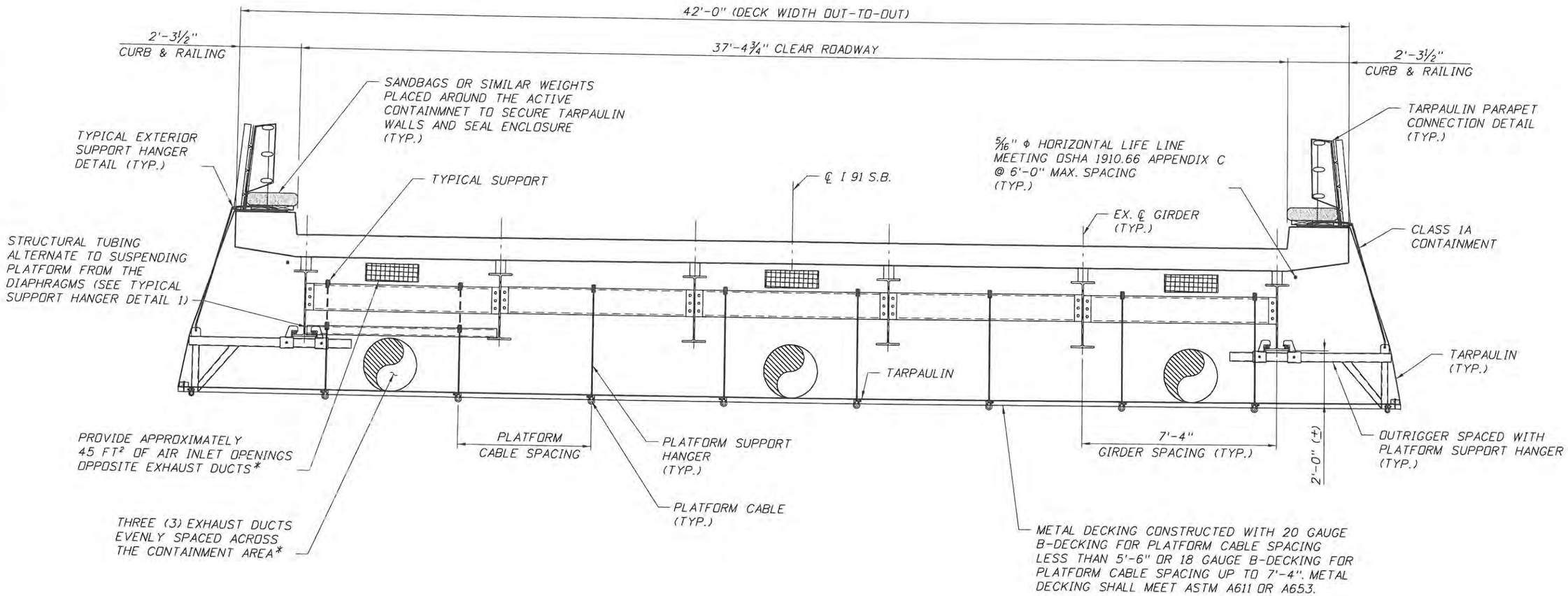

* BASED ON MAXIMUM CONTAINMENT AREA OF 285 FT² AS MEASURED PERPENDICULAR TO THE DIRECTION OF CROSS-DRAFT (SEE VENTILATION SYSTEM TABLE ON GENERAL NOTES SHEETS)

TYPICAL SECTION
(10 PLATFORM CABLES)
(MOBILE DUST COLLECTOR NOT SHOWN FOR CLARITY)

NOTES:

1. THESE PLANS WERE PREPARED WITHOUT THE BENEFIT OF AS-BUILT BRIDGE PLANS. THE CONTRACTOR SHALL MAKE ALLOWANCE FOR BRIDGE ELEMENTS AND MODIFICATIONS NOT SHOWN ON THESE PLANS.
2. THE CONTRACTOR SHALL AVOID ATTACHING/CONNECTING TO BRIDGE ELEMENTS EXHIBITING SIGNIFICANT SECTION LOSS.
3. FOR ADDITIONAL DETAILS, SEE CONTAINMENT MISCELLANEOUS DETAILS SHEETS.
4. CONTRACTOR TO PROVIDE LIFE LINES MEETING OSHA 1910.66 APPENDIX C AS REQUIRED.

STATE OF VERMONT
PAUL R. STEIJLEN
NO. 107795
CIVIL
LICENSED
PROFESSIONAL ENGINEER
6-13-16

Bridge Nos. 45N & 45S (I-91 over Wilder SH) (M.M. 72.01)

REVISIONS		
DATE	BY	DESCRIPTION

PAUL STEIJLEN P.E.
P.E. LICENSE NUMBER 107795
A2B ENGINEERING, LLC.
5406 N. HOOVER BLVD., SUITE 12
TAMPA, FL 33634

MONOKO, LLC.
1037 PENINSULA AVENUE
TARPON SPRINGS, FL 34689
PHONE (727) 940-3244
FAX (727) 279-8795

DRAWN BY: BDN 03/16
CHECKED BY: PDB 03/16
DESIGNED BY: MAT 03/16
CHECKED BY: PRS 03/16

VERMONT AGENCY OF TRANSPORTATION

ROAD NO.	COUNTY	PROJECT NO.
	WINDSOR	IM BPNT(13)

SHEET TITLE: CONTAINMENT SECTION DETAILS (2 OF 3)

PROJECT NAME: ELEVEN BRIDGES ON I-91

REF. DWG. NO.

SHEET NO. C-19

P:\187 Monoko, LLC\18 Windsor - Hartford\1 Containment Plans\Cadd\B45Typical02.dgn

Cad12 6/14/2016 7:19:55 AM

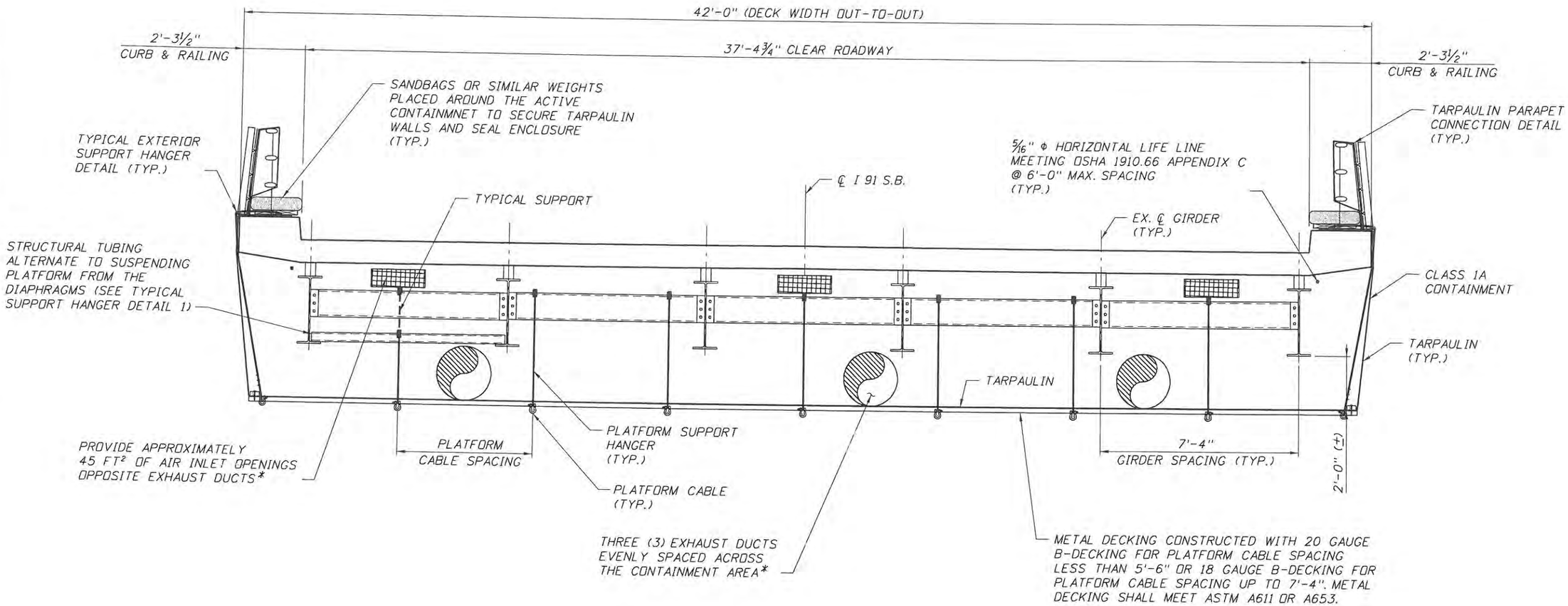

* BASED ON MAXIMUM CONTAINMENT AREA OF 285 FT² AS MEASURED PERPENDICULAR TO THE DIRECTION OF CROSS-DRAFT (SEE VENTILATION SYSTEM TABLE ON GENERAL NOTES SHEETS)

ALTERNATE TYPICAL SECTION
(9 PLATFORM CABLES)
(MOBILE DUST COLLECTOR NOT SHOWN FOR CLARITY)

NOTES:

1. THESE PLANS WERE PREPARED WITHOUT THE BENEFIT OF AS-BUILT BRIDGE PLANS. THE CONTRACTOR SHALL MAKE ALLOWANCE FOR BRIDGE ELEMENTS AND MODIFICATIONS NOT SHOWN ON THESE PLANS.
2. THE CONTRACTOR SHALL AVOID ATTACHING/CONNECTING TO BRIDGE ELEMENTS EXHIBITING SIGNIFICANT SECTION LOSS.
3. FOR ADDITIONAL DETAILS, SEE CONTAINMENT MISCELLANEOUS DETAILS SHEETS.
4. CONTRACTOR TO PROVIDE LIFE LINES MEETING OSHA 1910.66 APPENDIX C AS REQUIRED.

STATE OF VERMONT
PAUL STEIJLEN
NO. 107795
CIVIL
LICENSED
PROFESSIONAL ENGINEER
6-13-16

Bridge Nos. 45N & 45S (I-91 over Wilder SH) (M.M. 72.01)

REVISIONS		
DATE	BY	DESCRIPTION

PAUL STEIJLEN P.E.
P.E. LICENSE NUMBER 107795
A2B ENGINEERING, LLC.
5406 N. HOOVER BLVD., SUITE 12
TAMPA, FL 33634

MONOKO, LLC.
1037 PENINSULA AVENUE
TARPON SPRINGS, FL 34689
PHONE (727) 940-3244
FAX (727) 279-8795

DRAWN BY: BDN 03/16
CHECKED BY: PDB 03/16
DESIGNED BY: MAT 03/16
CHECKED BY: PRS 03/16

VERMONT AGENCY OF TRANSPORTATION

ROAD NO.	COUNTY	PROJECT NO.
	WINDSOR	IM BPNT(13)

SHEET TITLE: CONTAINMENT SECTION DETAILS (3 OF 3)
PROJECT NAME: ELEVEN BRIDGES ON I-91
REF. DWG. NO.
SHEET NO. C-20

P:\187 Monoko, LLC\18 Windsor - Hartford\1 Containment Plans\Cad\B45Typical03.dgn
Cad12 6/14/2016 7:19:58 AM

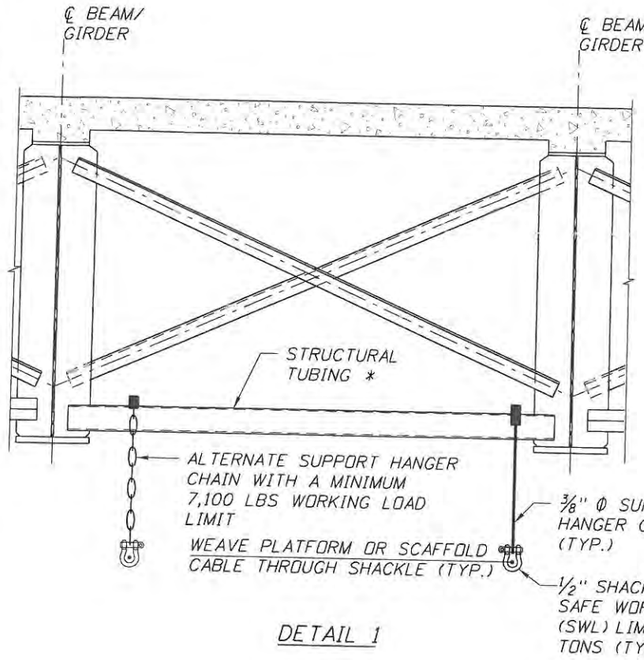

DETAIL 1

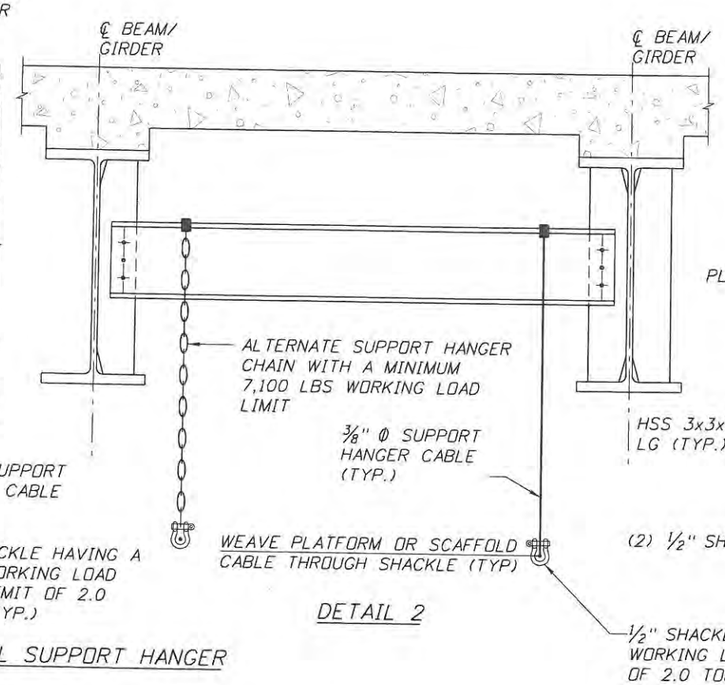

DETAIL 2

TYPICAL SUPPORT HANGER

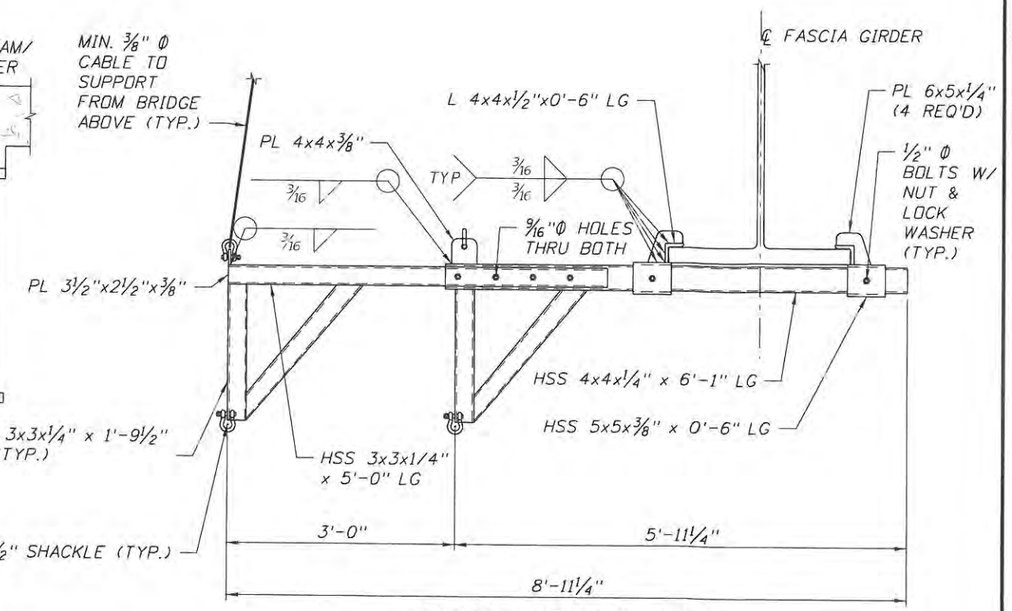

TYPICAL OUTRIGGER DETAIL

* USE TS 4X4X1/4 FOR SPACING UP TO 9'-6" OR TS 4X4X3/8 FOR SPACING UP TO 11'-0"

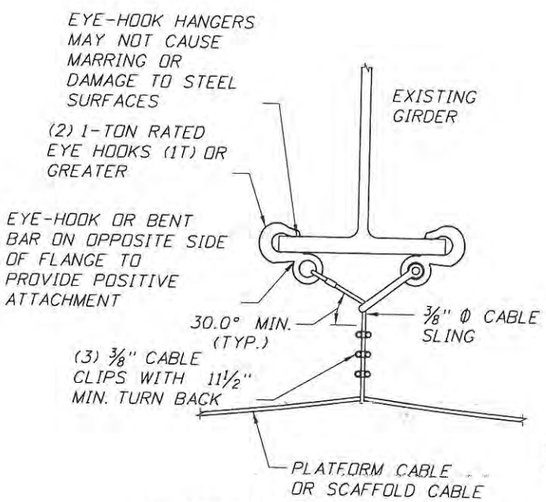

ALTERNATE SUPPORT HANGER

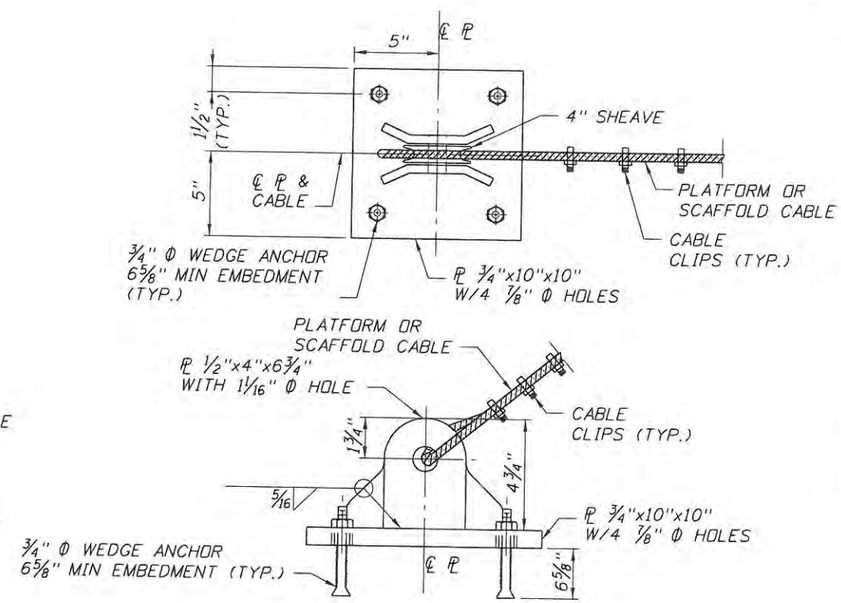

OPTIONAL ANCHOR PLATE ATTACHMENT

GENERAL NOTES:

1. OBTAIN APPROVAL FROM OWNER OR THE RESIDENT ENGINEER PRIOR TO INSTALLATION OF THE ANCHOR PLATE. CONSULT WITH RESIDENT ENGINEER REGARDING ANY ENCASED CONDUITS, REINFORCEMENT, PIPES, OR ANY OTHER KNOWN OBSTRUCTIONS PRIOR TO DRILLING.
2. STRUCTURAL STEEL SHALL CONFORM TO ASTM A36.
3. WELD ELECTRODES SHALL BE E70XX.
4. TO RESTORE CONCRETE:
   - REMOVE ANCHORS COMPLETELY WITHOUT DAMAGING THE CONCRETE ELEMENT.
   - FINISH SURFACE WITH DOT APPROVED METHODS AND NON-SHRINK GROUT.
5. MINIMUM 8" EDGE DISTANCE AND 6" CENTER TO CENTER OF BOLTS IS REQUIRED.
6. CONTRACTOR SHALL ATTACH THE ANCHOR PLATES TO SOUND CONCRETE. CONCRETE THAT IS SPALLED SHALL NOT BE CONSIDERED AS SOUND. CONCRETE WITH MAP CRACKS AND EFFLORESCENCE SHOULD HAVE PULL OUT TESTS CONDUCTED ON ALL ANCHOR BOLTS TO ENSURE THAT THE PROPER CAPACITY CAN BE ACHIEVED.
7. ANCHOR PLATE SHALL NOT BE ATTACHED TO PRESTRESSED PILES OR BEAMS.

INSTALLATION NOTES:

1. DRILL (4) HOLES, USING THE MANUFACTURER'S RECOMMENDED DRILL BIT SIZE, INTO CONCRETE USING ANCHOR PLATE AS A TEMPLATE. (HOLES FOR ANCHOR BOLTS SHALL BE DRILLED 1/4" MINIMUM DEEPER THAN THE MINIMUM EMBEDMENT LENGTH FOR ALL ANCHOR BOLTS.)
2. INSTALL ANCHOR BOLTS PER MANUFACTURER'S INSTRUCTIONS.
3. INSTALL 5/8" SHACKLE (OR GREATER) ONTO THE ANCHOR PLATE.
4. INSTALL MAIN CABLE ONTO SHACKLE.
5. CONSULT WITH SPECIALTY ENGINEER IF THE ANCHOR PLATE HAS TO BE REPOSITIONED DUE TO FAILED PROOF LOADING OF ANCHOR BOLTS.

STATE OF VERMONT
PAUL R. STEIJLEN
NO. 107795
CIVIL
LICENSED
PROFESSIONAL ENGINEER
6-13-16

Bridge Nos. All

REVISIONS		
DATE	BY	DESCRIPTION

PAUL STEIJLEN P.E.
P.E. LICENSE NUMBER 107795
A2B ENGINEERING, LLC.
5406 N. HOOVER BLVD., SUITE 12
TAMPA, FL 33634

MONOKO, LLC.
1037 PENINSULA AVENUE
TARPON SPRINGS, FL 34689
PHONE (727) 940-3244
FAX (727) 279-8795

DRAWN BY:	CHECKED BY:	DESIGNED BY:	CHECKED BY:
BDN 03/16	PDB 03/16	MAT 03/16	PRS 03/16

VERMONT AGENCY OF TRANSPORTATION

ROAD NO.	COUNTY	PROJECT NO.
	WINDSOR	IM BPNT(13)

SHEET TITLE: CONTAINMENT MISCELLANEOUS DETAILS (1 OF 6)

PROJECT NAME: ELEVEN BRIDGES ON I-91

REF. DWG. NO.

SHEET NO. C-21

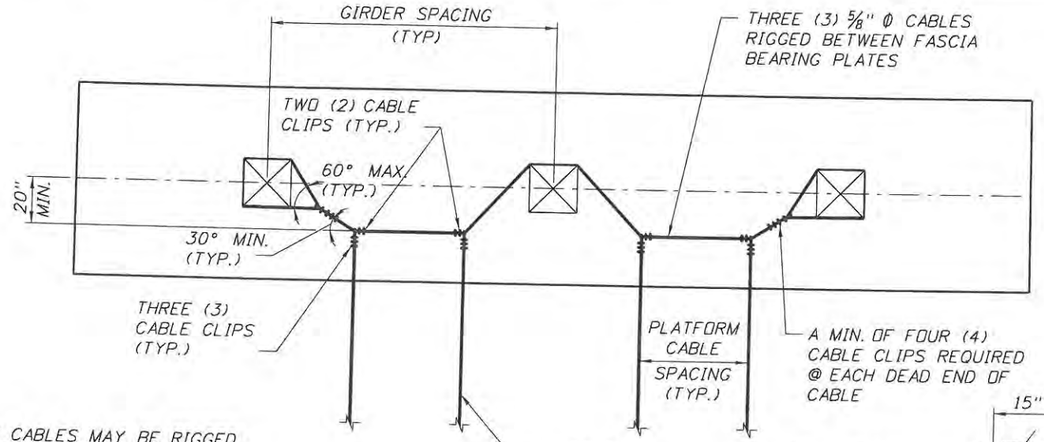

NOTE:

ATTACHMENT CABLES MAY BE RIGGED ACROSS ENTIRE WIDTH OF BRIDGE, BETWEEN FASCIA GIRDER BEARINGS AND/OR BETWEEN INDIVIDUAL PAIRS OF BEARINGS.

TRANSVERSE CABLE ATTACHMENT

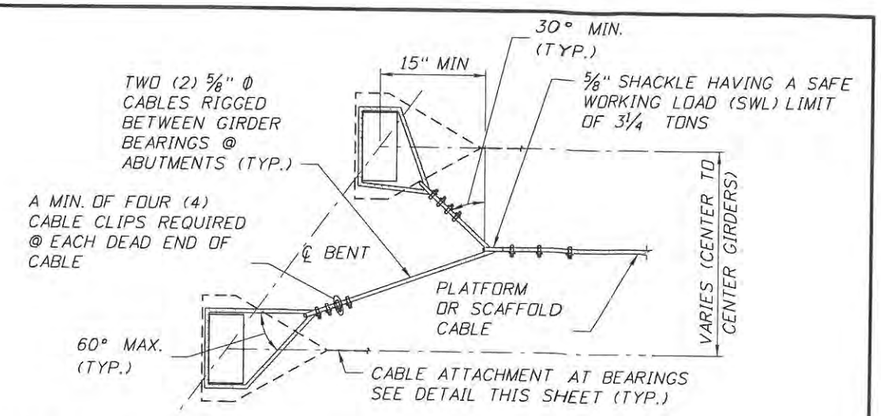

MID BAY CABLE ATTACHMENTS

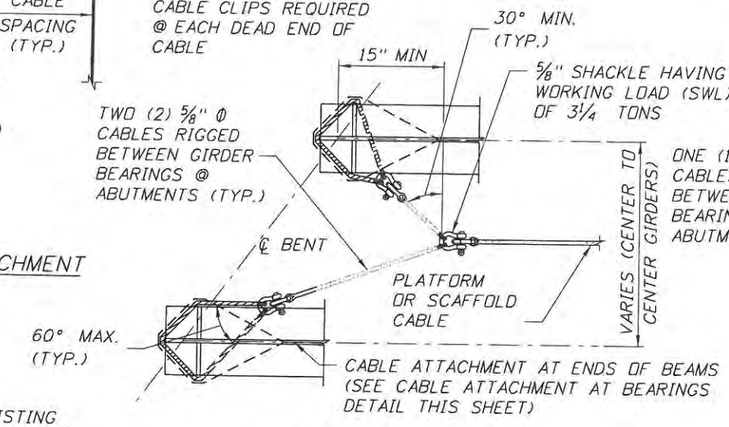

MID BAY CABLE ATTACHMENTS

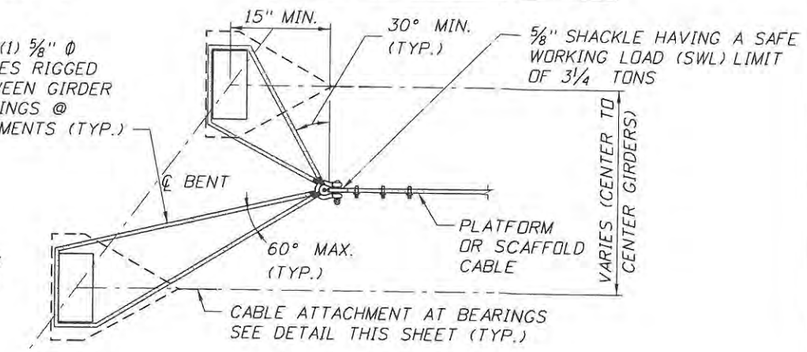

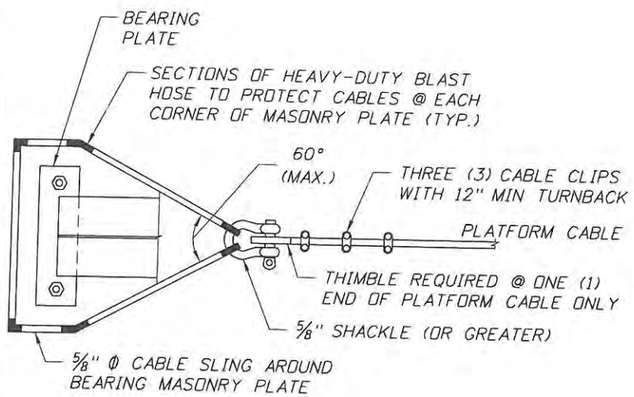

PLAN VIEW

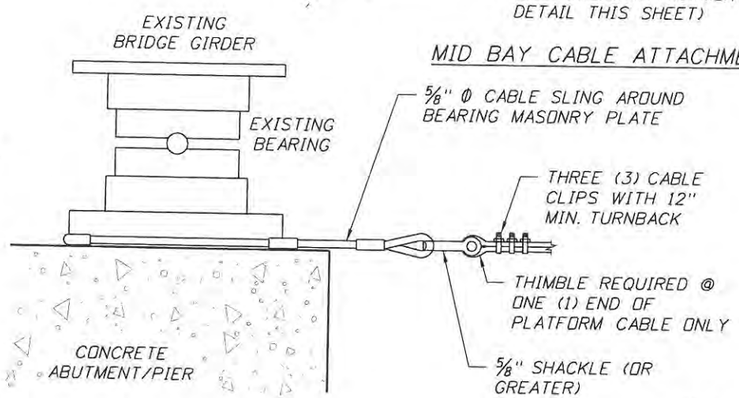

ELEVATION

CABLE ATTACHMENT AT BEARINGS

MID BAY CABLE ATTACHMENTS ALTERNATE

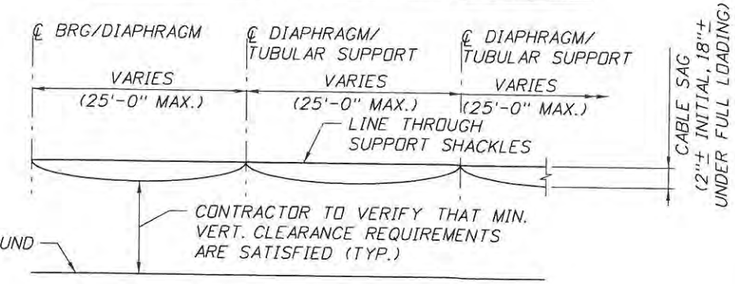

DESIGN CABLE SAG

* SANDBLASTING POT SHALL BE CENTERED OVER PIER. IF EQUIPMENT EXCEEDS LEGAL LOAD LIMITS WHEN FULL, EQUIPMENT SHALL BE USED PARTIALLY FULL ONLY AS REQUIRED TO STAY WITHIN LEGAL LOAD LIMITS. ANY LOAD THAT EXEEDS LEGAL LOAD OR POSTED LIMIT SHALL BE SUBMITTED TO THE DEPARTMENT FOR REVIEW AND APPROVAL.

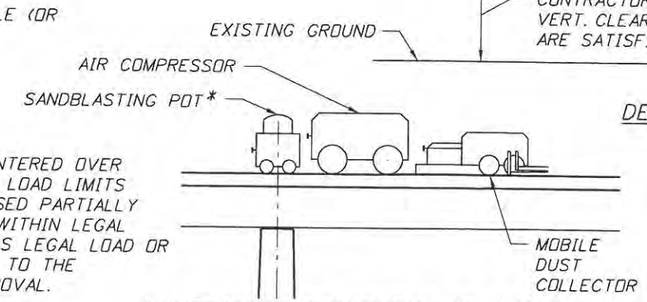

CONTRACTOR EQUIPMENT ON BRIDGE
(SCHEMATIC)

STATE OF VERMONT
PAUL R. STEIJLEN
No. 107795
CIVIL
LICENSED
PROFESSIONAL ENGINEER
6-14-16

Bridge Nos. All

REVISIONS		
DATE	BY	DESCRIPTION

PAUL STEIJLEN P.E.
P.E. LICENSE NUMBER 107795
A2B ENGINEERING, LLC.
5406 N. HOOVER BLVD., SUITE 12
TAMPA, FL 33634

MONOKO, LLC.
1037 PENINSULA AVENUE
TARPON SPRINGS, FL 34689
PHONE (727) 940-3244
FAX (727) 279-8795

DRAWN BY: BDN 03/16
CHECKED BY: PDB 03/16
DESIGNED BY: MAT 03/16
CHECKED BY: PRS 03/16

VERMONT AGENCY OF TRANSPORTATION

ROAD NO.	COUNTY	PROJECT NO.
	WINDSOR	IM BPNT(13)

SHEET TITLE: CONTAINMENT MISCELLANEOUS DETAILS (2 OF 6)

PROJECT NAME: ELEVEN BRIDGES ON I-91

REF. DWG. NO.

SHEET NO. C-22

P:\187 Monoko, LLC\18 Windsor - Hartford\1 Containment Plans\Cadd\BDDetails01.dgn

Cad12 6/14/2016 7:18:49 AM

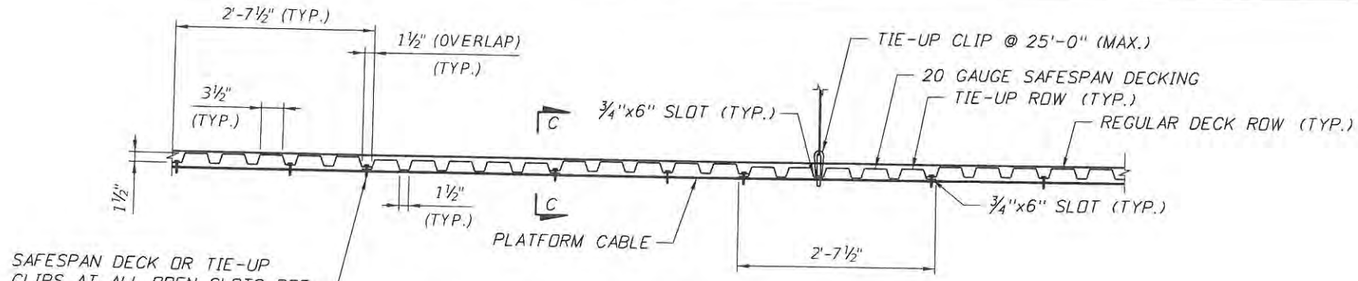

SAFESPAN METAL DECKING DETAIL
(100% TIE-OFF REQUIRED AT ENDS)

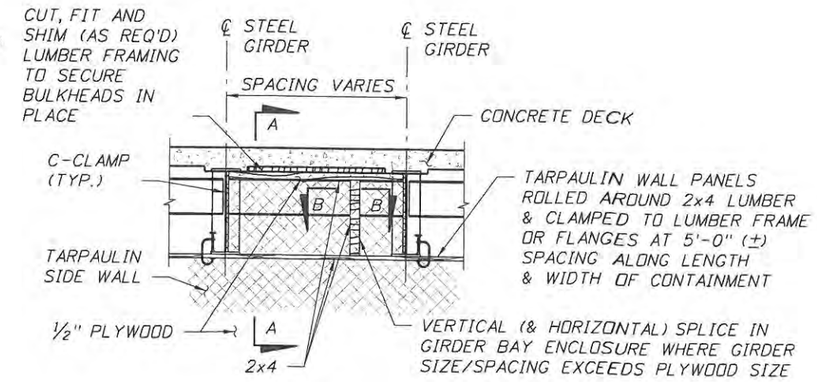

GIRDER BAY ENCLOSURE

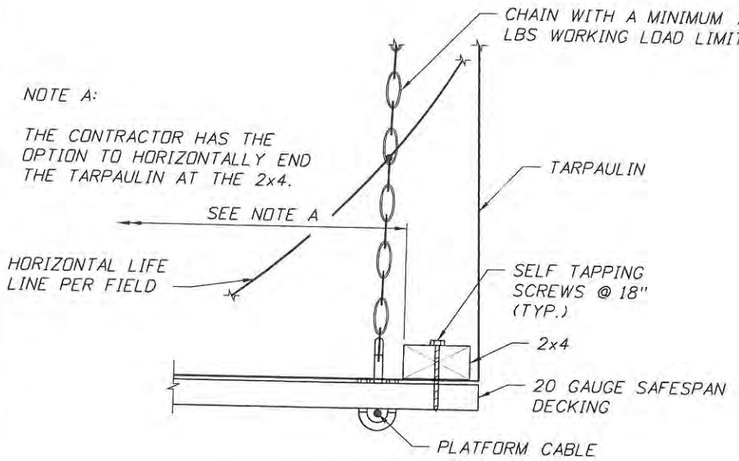

METAL DECKING END DETAIL

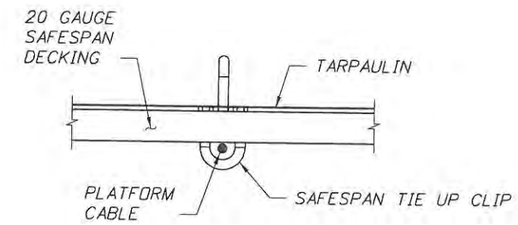

SECTION C-C
(TIE-UP CLIP SHOWN, DECK CLIP IS SIMILAR)

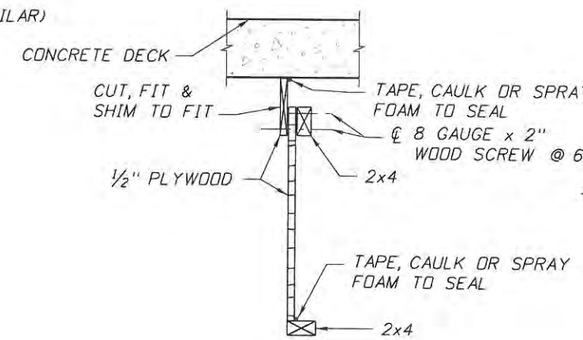

SECTION A-A

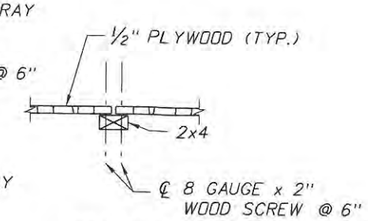

SECTION B-B

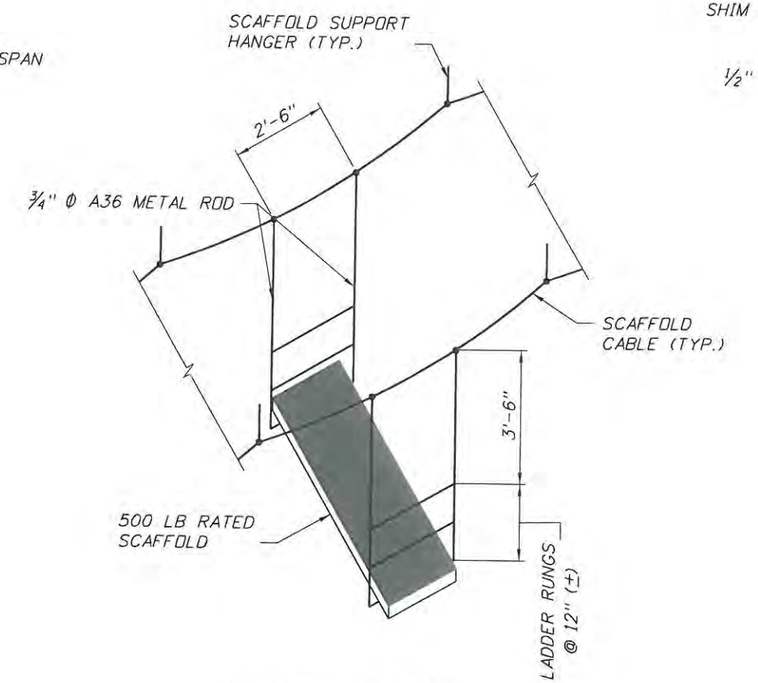

SCAFFOLD ISOMETRIC
(OPTIONAL SUSPENDED SCAFFOLD)

CABLE CLIP INSTALLATION			
CABLE DIA	MIN. CABLE TURNBACK, IN.	MIN. TORQUE FT-LBS	NO. OF CLIPS
⅜"	11"	45	3
½"	11.5"	65	3
9/16"	12"	95	3
⅝"	12"	95	3

NOTE:

ALL CABLES & CLIPS SHALL BE INSTALLED IN ACCORDANCE WITH THE MANUFACTURER'S RECOMMENDED PROCEDURES. IF CABLES SEPARATE AT 60° MAX. ANGLE, ADD ONE ADDITIONAL CLIP.

STATE OF VERMONT
PAUL R. STEIJLEN
NO. 107795
CIVIL
LICENSED
PROFESSIONAL ENGINEER
6-14-16

Bridge Nos. All

REVISIONS		
DATE	BY	DESCRIPTION

PAUL STEIJLEN P.E.
P.E. LICENSE NUMBER 107795
A2B ENGINEERING, LLC.
5406 N. HOOVER BLVD., SUITE 12
TAMPA, FL 33634

MONOKO, LLC.
1037 PENINSULA AVENUE
TARPON SPRINGS, FL 34689
PHONE (727) 940-3244
FAX (727) 279-8795

DRAWN BY:	CHECKED BY:	DESIGNED BY:	CHECKED BY:
BDN 03/16	PDB 03/16	MAT 03/16	PRS 03/16

VERMONT AGENCY OF TRANSPORTATION

ROAD NO.	COUNTY	PROJECT NO.
	WINDSOR	IM BPNT(13)

SHEET TITLE: CONTAINMENT MISCELLANEOUS DETAILS (3 OF 6)

PROJECT NAME: ELEVEN BRIDGES ON I-91

REF. DWG. NO.

SHEET NO. C-23

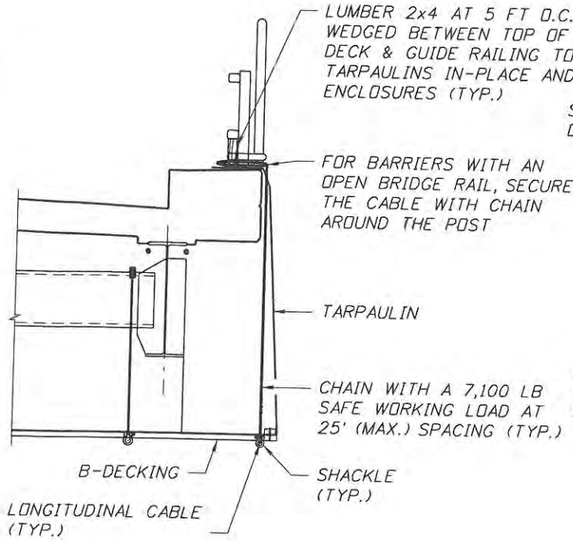

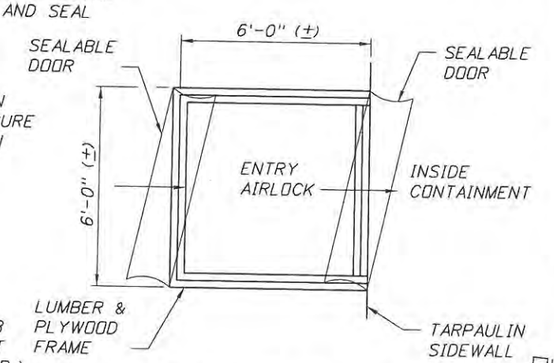

CONTAINMENT ENTRY

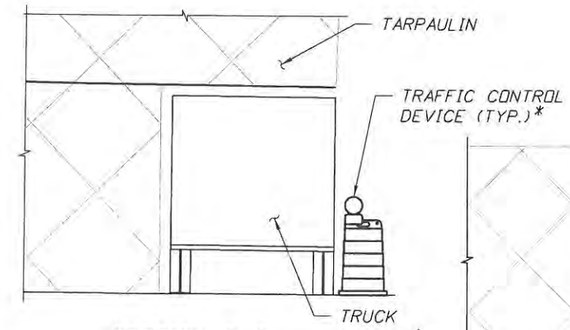

SECTION C-C

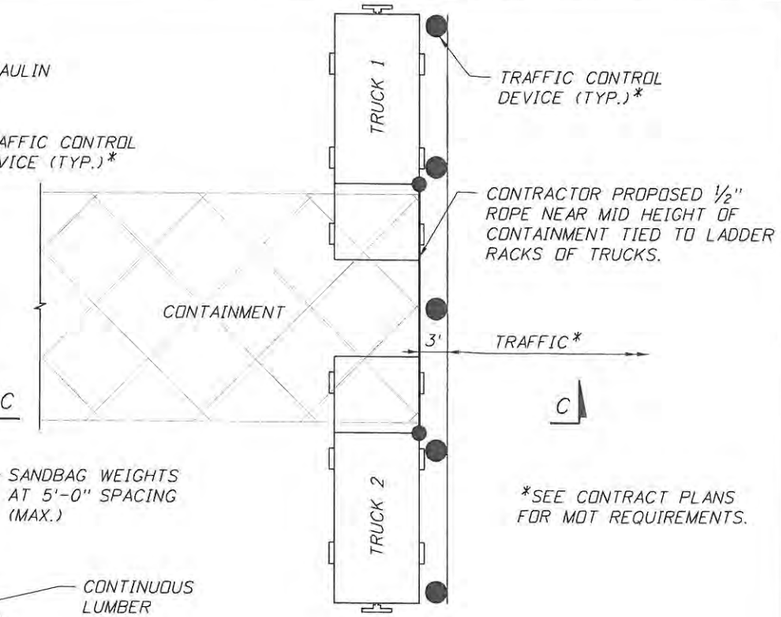

PLAN
(SUPPLEMENTAL TARPAULIN SUPPORT ADJACENT TO TRAFFIC)

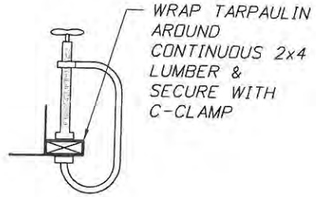

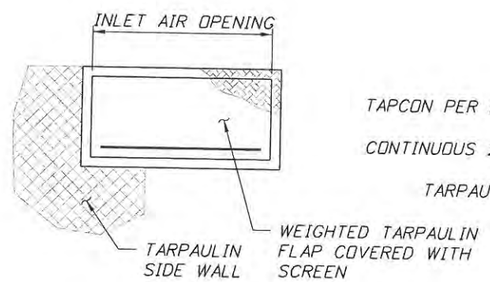

INLET AIR OPENING
INSTALL INLET AIR OPENINGS WITHIN TARPAULIN WALLS AND/OR GIRDER BAY ENCLOSURES AS REQUIRED

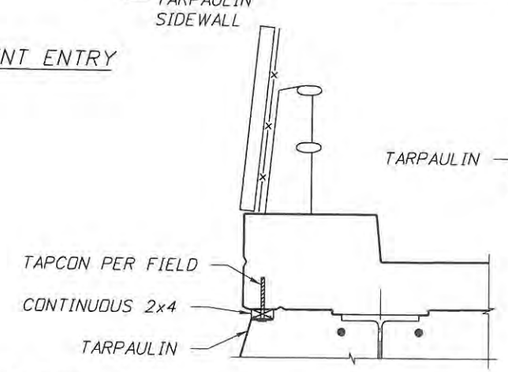

DETAIL 1

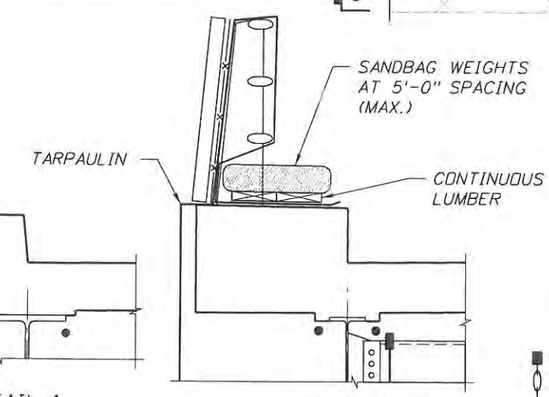

DETAIL 2

TARPAULIN PARAPET CONNECTION

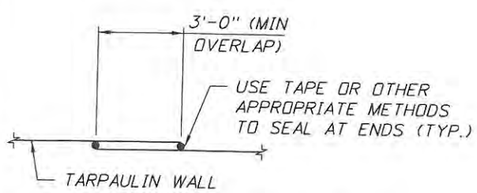

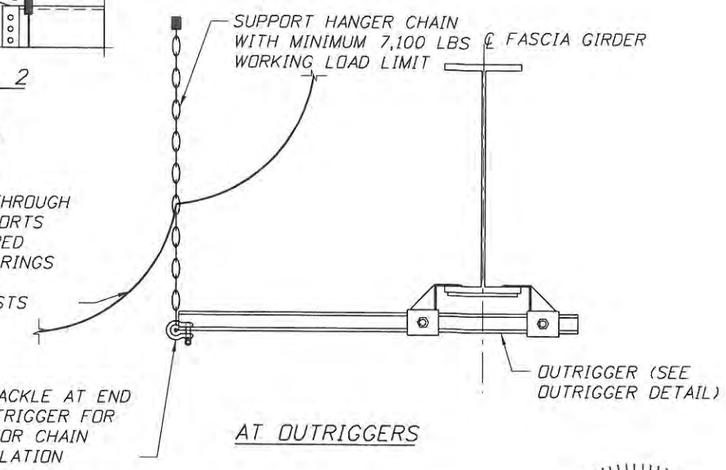

AT OUTRIGGERS

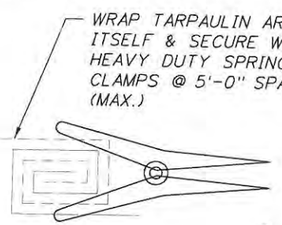

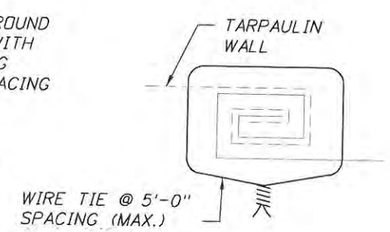

ADJACENT TARPAULIN CONNECTION ALTERNATIVES

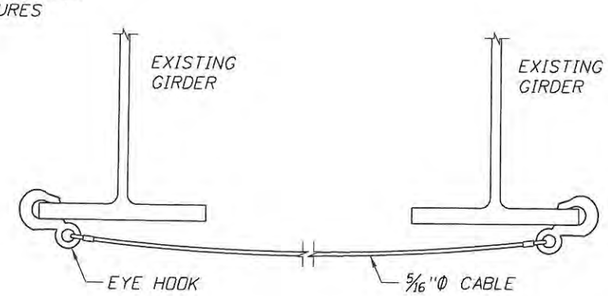

BETWEEN BEAMS

HORIZONTAL LIFE LINE DETAIL

STATE OF VERMONT
PAUL R. STEIJLEN
NO. 107795
03-16-2016
CIVIL
LICENSED
PROFESSIONAL ENGINEER

Bridge Nos. All

REVISIONS		
DATE	BY	DESCRIPTION

PAUL STEIJLEN P.E.
P.E. LICENSE NUMBER 107795
A2B ENGINEERING, LLC.
5406 N. HOOVER BLVD., SUITE 12
TAMPA, FL 33634

MONOKO, LLC.
1037 PENINSULA AVENUE
TARPON SPRINGS, FL 34689
PHONE (727) 940-3244
FAX (727) 279-8795

DRAWN BY: BDN 03/16
CHECKED BY: PDB 03/16
DESIGNED BY: MAT 03/16
CHECKED BY: PRS 03/16

VERMONT AGENCY OF TRANSPORTATION

ROAD NO.	COUNTY	PROJECT NO.
	WINDSOR	IM BPNT(13)

SHEET TITLE: CONTAINMENT MISCELLANEOUS DETAILS (4 OF 6)

PROJECT NAME: ELEVEN BRIDGES ON I-91

REF. DWG. NO.

SHEET NO. C-24

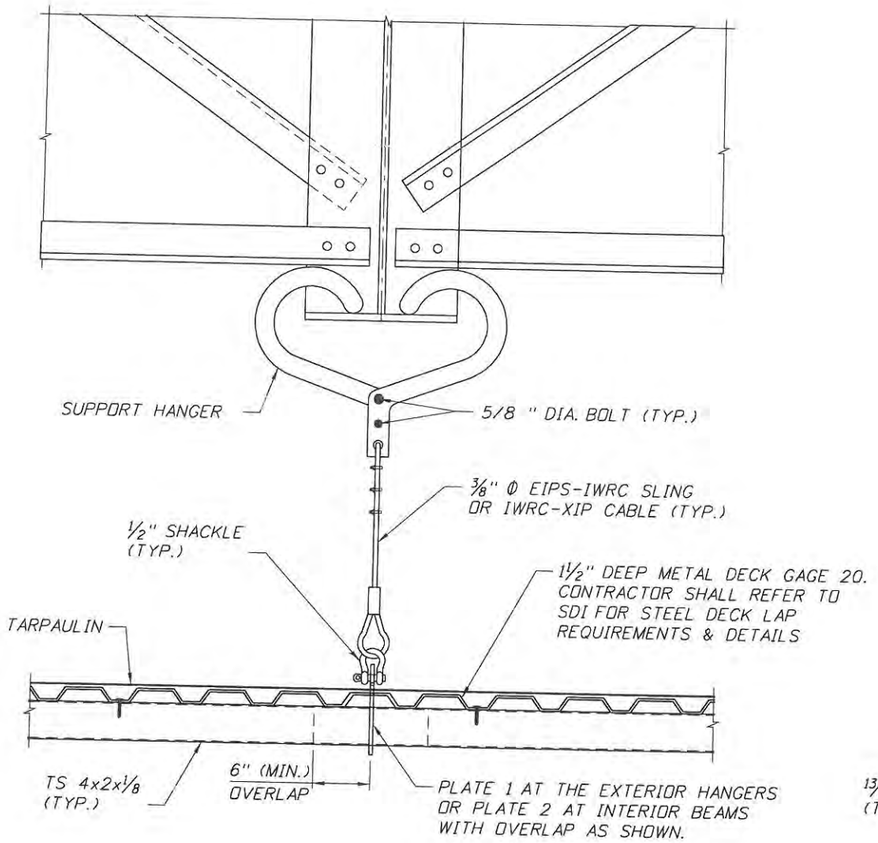

SUPPORT HANGER
(STRUCTURAL TUBING SHOWN,
SAFESPAN SYSTEM IS SIMILAR)

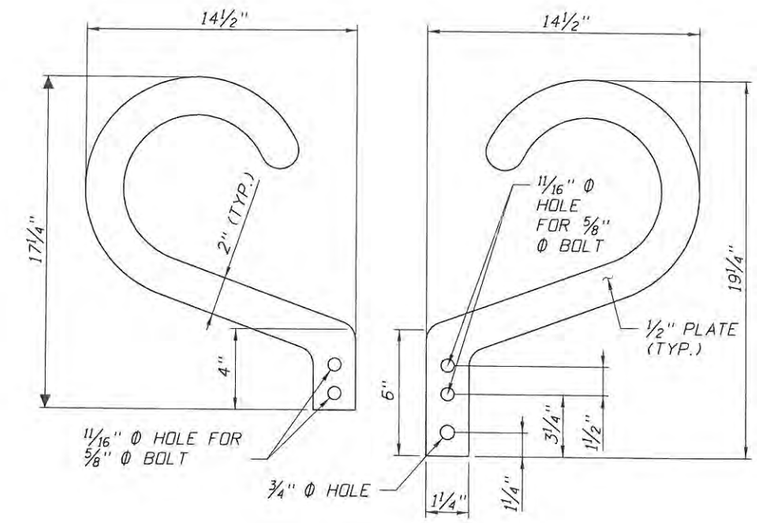

SUPPORT HANGER DETAIL

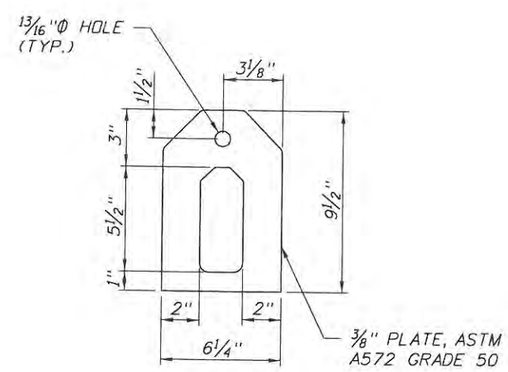

PLATE 1 DETAIL

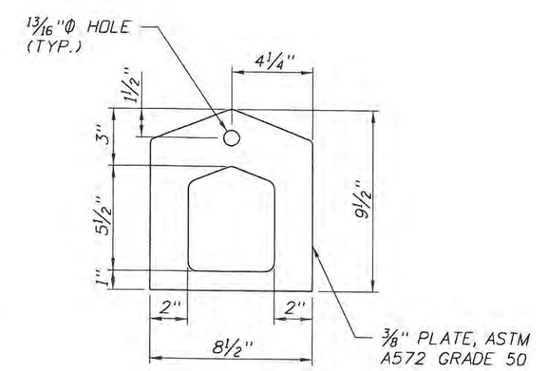

PLATE 2 DETAIL

STATE OF VERMONT
PAUL R. STEIJLEN
NO. 107795
6-13
CIVIL
LICENSED
PROFESSIONAL ENGINEER

REVISIONS		
DATE	BY	DESCRIPTION

PAUL STEIJLEN P.E.
P.E. LICENSE NUMBER 107795
A2B ENGINEERING, LLC.
5406 N. HOOVER BLVD., SUITE 12
TAMPA, FL 33634

MONOKO, LLC.
1037 PENINSULA AVENUE
TARPON SPRINGS, FL 34689
PHONE (727) 940-3244
FAX (727) 279-8795

DRAWN BY: BDN 03/16
CHECKED BY: PDB 03/16
DESIGNED BY: MAT 03/16
CHECKED BY: PRS 03/16

VERMONT
AGENCY OF TRANSPORTATION

ROAD NO.	COUNTY	PROJECT NO.
	WINDSOR	IM BPNT(13)

SHEET TITLE: CONTAINMENT MISCELLANEOUS DETAILS (5 OF 6)

PROJECT NAME: ELEVEN BRIDGES ON I-91

REF. DWG. NO.

SHEET NO. C-25

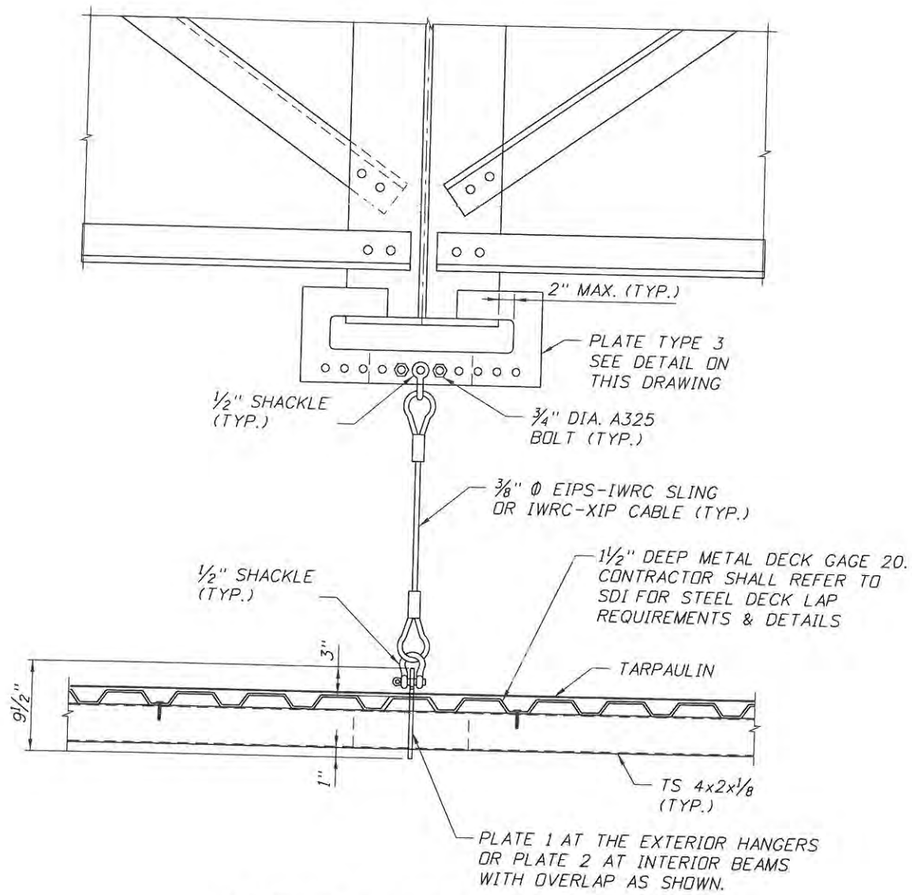

ALTERNATE SUPPORT HANGER 1

(STRUCTURAL TUBING SHOWN,
SAFESPAN SYSTEM IS SIMILAR)

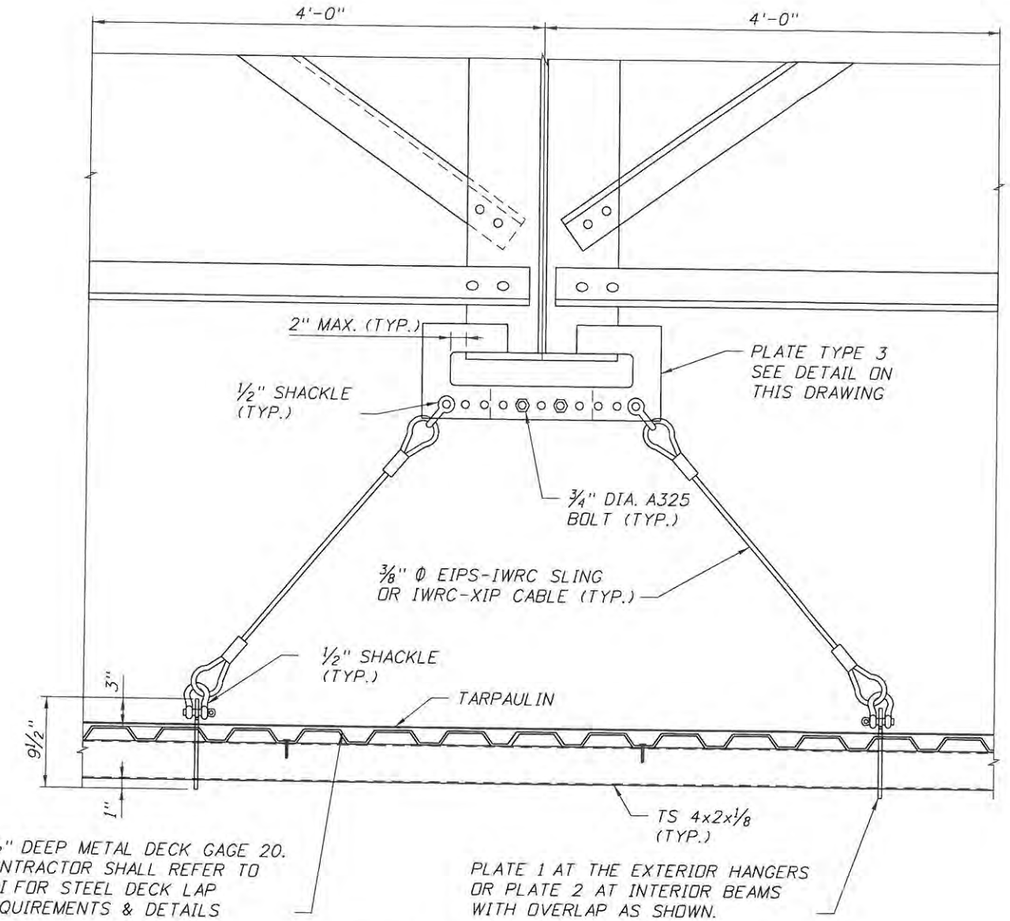

ALTERNATE SUPPORT HANGER 2

(STRUCTURAL TUBING SHOWN,
SAFESPAN SYSTEM IS SIMILAR)

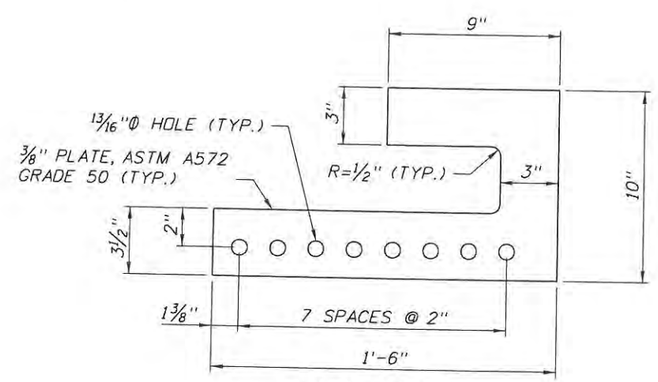

PLATE 3 DETAIL

STATE OF VERMONT
PAUL R. STEIJLEN
NO. 107795
CIVIL
LICENSED
PROFESSIONAL ENGINEER
6-30-16

Bridge Nos. All

REVISIONS		
DATE	BY	DESCRIPTION

PAUL STEIJLEN P.E.
P.E. LICENSE NUMBER 107795
A2B ENGINEERING, LLC.
5406 N. HOOVER BLVD., SUITE 12
TAMPA, FL 33634

MONOKO, LLC.
1037 PENINSULA AVENUE
TARPON SPRINGS, FL 34689
PHONE (727) 940-3244
FAX (727) 279-8795

DRAWN BY: BDN 03/16
CHECKED BY: PDB 03/16
DESIGNED BY: MAT 03/16
CHECKED BY: PRS 03/16

VERMONT
AGENCY OF TRANSPORTATION

ROAD NO.	COUNTY	PROJECT NO.
	WINDSOR	IM BPNT(13)

SHEET TITLE: CONTAINMENT MISCELLANEOUS DETAILS (6 OF 6)

PROJECT NAME: ELEVEN BRIDGES ON I-91

REF. DWG. NO.

SHEET NO. C-26