ABRASIVE BLASTING CONTAINMENT PLANS, REV. 1
5 BRIDGES ON OR OVER US ROUTE 7
BRIDGE NOS. 11, D15, 16N, 16S & 56C

Project No. BF BPNT (16)

Bennington and Rutland County, Vermont

Table of Contents

Appendix A: Structural Impact A1

Appendix B: Platform Design B1

Appendix C: Scaffold Design C1

Appendix D: Miscellaneous Hardware D1

Appendix E: Standard Wire Rope E1

Appendix F: Scaffold Platforms F1

Appendix G: Ventilation System G1

Prepared for:

Monoko, LLC
1037 Peninsula Avenue
Tarpon Springs, FL 34689
(727) 940 - 3244

April, 2016

A2B Engineering, LLC

Paul R. Steijlen, P.E.
VT License No. 107795

Appendix A
Structural Impact

A2B ENGINEERING, LLC
CONSULTING ENGINEERS

Structural Impact:

The platform containment structure has been analyzed for a live load of 16 psf (Approximately 0.5 in. average depth of steel shot, 1.5" mineral slag abrasive or 1.5" sand abrasive plus uniform worker loading). When the depth of the spent abrasives nears the depths specified, the contractor will cease abrasive blasting operations and vacuum the spent abrasives.

The chain link has been designed for a max. of 1" of steel shot (3" mineral slag abrasive or 3" sand abrasive).

The scaffold structure has been analyzed for approximately 1/4" average depth of steel shot. The configuration of the scaffold was taken to be 32 feet by 28 inches (max) with a 2 person, 500 lb rated scaffold.

Design Loads:

Platform Design Criteria:

Dead Load =	3	psf	(Platform)
Live Load (Uniform) =	12	psf	0.5 in. steel shot
Live Load (Uniform) =	4	psf	(2 workers)

Scaffold Design Criteria:

Length =	32	ft	(max per scaffold)
Width =	28	in	(max per scaffold)
Dead Load =	220	lb	(scaffold)
Weight of steel shot =	6	psf	0.25 in. steel shot
Live Load (Concentrated) =	250	lb	(per worker)

No more than 2 workers shall be allowed per platform cable or scaffold cable. Limit 500 lb. total weight of workers and abrasive blasting on 500 lb. rated scaffold

Wind Loads:

The containment structure has been analyzed for a maximum wind velocity of 40 mph. If winds nearing or exceeding 40 mph (or a lesser wind is specified in the contract specifications) are predicted, blasting and painting operations shall cease, and the paint containment tarpaulins shall be rolled and secured in place.

Design Variables:

Height to C.G. of Cont. Area = 20 ft

Height and Exposure Factor Kz = 1.0
(ASCE 7-10 Table 17.3-1, z = 50 ft, Exposure C)

Topographic Factor Kzt = 1.0
(ASCE 7-10 Figure 26.8-1)

Wind Directionality Kd = 0.85
(ASCE 7-10 Table 26.6-1, Building C & C)

Wind Velocity V = 40 mph

Wind Pressure $Pz = 0.00256*K_z*K_{zt}*K_d*V^2$ **(psf)**

Wind Pressure **Pz =** 3.48 psf

Design Pressure:

Height of Cont. Area = 50 ft (Conservative)

Wind Pressure = Height*Pz = 175.0 plf

NOTE:

Based on the maximum wind velocity of 40 mph (8 psf wind load per AASHTO), the resulting load transferred to a bridge structure is 175 plf, based on a containment height of 50 ft. from the top of the bridge parapets to grade. Since AASHTO 3.15.1.1.2 specifies a lateral loading of 300 plf minimum, for design of girder bridges and 450 plf for truss bridges, the maximum anticipated load of 175 plf is acceptable. Therefore, wind loading on girder bridges does not govern.

Appendix B
Platform Design

A2B ENGINEERING, LLC
CONSULTING ENGINEERS

Platform Cable Design Summary (Chain Link Fence):

Option #	Platform Cable Size (in.)	Platform Support Hanger (in.)	Max. Platform Support Hanger Spacing	Max. Platform Cable Spacing	Platform Cable Load Ratio	Platform Support Hanger Load Ratio	Chain Hanger Load Ratio	Maximum Shackle Load Ratio	Overall Design Check
1	1/2	3/8	25.00	3.75	1.01	1.28	2.40	2.03	OK
2	9/16	3/8	25.00	5.25	1.02	1.01	1.90	1.22	OK

Option # 1

Platform Cable Size = 1/2 in.
Minimum Support Hanger Size = 3/8 in.
Maximum Support Hanger Spacing = 25 ft.
Maximum Cable Spacing = 3.75 ft.
Minimum Shackle Size = 5/8 in. (for Platform Support Hangers)
Minimum Shackle Size = 5/8 in. (for Platform Cables)
Design Cable Sag = 18 in.

Option # 2

Platform Cable Size = 9/16 in.
Minimum Support Hanger Size = 3/8 in.
Maximum Support Hanger Spacing = 25 ft.
Maximum Cable Spacing = 5.25 ft.
Minimum Shackle Size = 1/2 in. (for Platform Support Hangers)
Minimum Shackle Size = 5/8 in. (for Platform Cables)
Design Cable Sag = 18 in.

A2B ENGINEERING, LLC CONSULTING ENGINEERS	Subject:	Abrasive Blasting Containment Plans Bennington and Rutland County, Vermont; 5 Bridges on or over US Route 7		
	Comp by: MAT Check by: PRS	Date: 11/09/15 Job No: 187-17-1		Sheet Number:

Suspended Platform System Design (Chain Link Fence with 0.5 in. dia. Platform Cable @ 3.75 ft. spacing):

1. Bridge Structure:	Max. Hanger Spacing =	25.00	ft.	
2. Worker Loading:	Tributary cable width =	**3.75**	ft. maximum	
	No. workers / platform cable =	2	(250# ea. OSHA)	
	Equiv. worker loading =	5.33	psf	
3. D+L Loading:	9-gage chain-link fence =	0.75	psf	
	18-oz floor tarpaulins =	0.13	psf	
	Dead Load =	0.88	psf	
	Dead Load (min) =	3.00	psf	
	Dead Load =	**3.00**	psf	
	Assume depth of grit =	1/2	in	
	Uniform grit loading =	12.00	psf	1/2 in. layer
	Equiv. worker loading =	6.00	psf	2 workers
	Live Load =	**18.00**	psf	(Grit + Worker Loading)
	Total Design Loading (Service) =	**21.00**	psf	
	Total Design Loading (Ultimate) =	**126.00**	psf	(Using FS = 6)
4. Platform Cable Analysis:	Platform Cable Size =	1/2	in.	dia.6x19 IWRC, EIP
(Longitudinals)	Platform Cable Weight =	0.46	plf	
	Platform Cable strength =	13.30	tons	
	Platform Cable strength =	12.80	tons	(pre-tensioned with 1000 lbf)

Max. tension at center of cable span, $H = w L^2 / 8 d$

Uniform cable load =	w =	473.0	plf	
Max. cable span =	L =	25.00	ft.	
Min. req'd deflect =	d =	15.0	in	(5% of length and 12 inch min.)
Use =	d =	18.0	in	
Tension (center) =	H =	12.32	tons	

Max. tension at end supports, $T = [H^2 + (w L / 2)^2]^{0.5}$

Design Cable Tension =	12.67	tons
Cable Stress Ratio =	**1.01 >= 1.0 OK**	
Use Shackle Size =	5/8	in
Working Load limit =	3.25	tons
Factor of Safety =	6	
Shackle Strength =	19.5	tons
Design Load at supports =	12.67	tons
Shackle Load Ratio =	1.54	
Shackle Check =	**Ok**	

5. Platform Support Hangers Analysis:

Max. tributary hanger area =	93.8	sq.ft.
Max. hanger load =	11813	lbf
Max. hanger load =	5.91	tons
Platform Support Hangers =	3/8	in. dia. 6x19 IWRC, EIP (min)
Platform Support Hangers Weight =	0.26	plf
Platform Support Hangers Strength =	7.55	tons
Hanger Stress Ratio =	**1.28**	**>= 1.0 OK**
Min. Chain Working Load =	7100	lb (min)
Factor of Safety =	4	
Chain Strength =	14.2	tons
Design Load at supports =	5.91	tons
Chain Hanger Stress Ratio =	**2.40**	**>= 1.0 OK**
Use Shackle Size =	1/2	in
Working Load limit =	2.00	tons
Factor of Safety =	6	
Shackle Strength =	12	tons
Design Load at supports =	5.91	tons
Shackle Load Ratio =	2.03	
Shackle Check =	**Ok**	

A2B ENGINEERING, LLC CONSULTING ENGINEERS	Subject: Abrasive Blasting Containment Plans Bennington and Rutland County, Vermont; 5 Bridges on or over US Route 7		
	Comp by: MAT Check by: PRS	Date: 11/09/15 Job No: 187-17-1	Sheet Number:

Suspended Platform System Design (Chain Link Fence with 0.5625 in. dia. Platform Cable @ 5.25 ft. spacing):

1. Bridge Structure:

Max. Hanger Spacing =	25.00	ft.

2. Worker Loading:

Tributary cable width =	**5.25**	ft. maximum
No. workers / platform cable =	2	(250# ea. OSHA)
Equiv. worker loading =	3.81	psf

3. D+L Loading:

9-gage chain-link fence =	0.75	psf	
18-oz floor tarpaulins =	0.13	psf	
Dead Load =	0.88	psf	
Dead Load (min) =	3.00	psf	
Dead Load =	**3.00**	psf	
Assume depth of grit =	1/2	in	
Uniform grit loading =	12.00	psf	1/2 in. layer
Equiv. worker loading =	4.00	psf	2 workers
Live Load =	**16.00**	psf	(Grit + Worker Loading)
Total Design Loading (Service) =	**19.00**	psf	
Total Design Loading (Ultimate) =	**114.00**	psf	(Using FS = 6)

4. Platform Cable Analysis:
(Longitudinals)

Platform Cable Size =	9/16	in.	dia.6x19 IWRC, EIP
Platform Cable Weight =	0.59	plf	
Platform Cable strength =	16.80	tons	
Platform Cable strength =	16.30	tons	(pre-tensioned with 1000 lbf)

Max. tension at center of cable span, $H = w L^2 / 8 d$

Uniform cable load =	w =	599.1	plf	
Max. cable span =	L =	25.00	ft.	
Min. req'd deflect =	d =	15.0	in	(5% of length and 12 inch min.)
Use =	d =	18.0	in	
Tension (center) =	H =	15.60	tons	

Max. tension at end supports, $T = [H^2 + (w L / 2)^2]^{0.5}$

Design Cable Tension =	16.04	tons
Cable Stress Ratio =	**1.02 >= 1.0 OK**	

Use Shackle Size =	5/8	in
Working Load limit =	3.25	tons
Factor of Safety =	6	
Shackle Strength =	19.5	tons
Design Load at supports =	16.04	tons
Shackle Load Ratio =	1.22	
Shackle Check =	**Ok**	

5. Platform Support Hangers Analysis:

Max. tributary hanger area =	131.3	sq.ft.
Max. hanger load =	14963	lbf
Max. hanger load =	7.48	tons
Platform Support Hangers =	3/8	in. dia. 6x19 IWRC, EIP (min)
Platform Support Hangers Weight =	0.26	plf
Platform Support Hangers Strength =	7.55	tons
Hanger Stress Ratio =	**1.01**	**>= 1.0 OK**
Min. Chain Working Load =	7100	lb (min)
Factor of Safety =	4	
Chain Strength =	14.2	tons
Design Load at supports =	7.48	tons
Chain Hanger Stress Ratio =	**1.90**	**>= 1.0 OK**
Use Shackle Size =	1/2	in
Working Load limit =	2.00	tons
Factor of Safety =	6	
Shackle Strength =	12	tons
Design Load at supports =	7.48	tons
Shackle Load Ratio =	1.60	
Shackle Check =	**Ok**	

Platform Cable Design Summary (Metal Decking):

Option #	Platform Cable Size (in.)	Platform Support Hanger (in.)	Max. Platform Support Hanger Spacing	Max. Platform Cable Spacing	Platform Cable Load Ratio	Platform Support Hanger Load Ratio	Chain Hanger Load Ratio	Maximum Shackle Load Ratio	Overall Design Check
1	1/2	3/8	25.00	3.75	1.00	1.27	2.39	1.53	OK
2	9/16	3/8	25.00	5.25	1.01	1.00	1.89	1.21	OK

Option # 1

Platform Cable Size = 1/2 in.
Minimum Support Hanger Size = 3/8 in.
Maximum Support Hanger Spacing = 25 ft.
Maximum Cable Spacing = 3.75 ft.
Minimum Shackle Size = 1/2 in. (for Platform Support Hangers)
Minimum Shackle Size = 5/8 in. (for Platform Cables)
Design Cable Sag = 18 in.

Option # 2

Platform Cable Size = 9/16 in.
Minimum Support Hanger Size = 3/8 in.
Maximum Support Hanger Spacing = 25 ft.
Maximum Cable Spacing = 5.25 ft.
Minimum Shackle Size = 1/2 in. (for Platform Support Hangers)
Minimum Shackle Size = 5/8 in. (for Platform Cables)
Design Cable Sag = 18 in.

A2B ENGINEERING, LLC CONSULTING ENGINEERS	Subject: Abrasive Blasting Containment Plans Bennington and Rutland County, Vermont; 5 Bridges on or over US Route 7		
	Comp by: MAT Check by: PRS	Date: 11/09/15 Job No: 187-17-1	Sheet Number:

Suspended Platform System Design (Metal Decking with 0.5 in. dia. Platform Cable @ 3.75 ft. spacing):

1. Bridge Structure:	Max. Hanger Spacing	25.00	ft.	
2. Worker Loading:	Tributary cable width	**3.75**	ft. maximum	
	No. workers / platform cable	2	(250# ea. OSHA)	
	Equiv. worker loading	5.33	psf	
3. D+L Loading:	Metal Decking	3.00	psf	
	18-oz floor tarpaulins	0.13	psf	
	Dead Load =	3.13	psf	
	Dead Load (min) =	3.00	psf	
	Dead Load =	**3.13**	psf	
	Assume depth of grit =	1/2	in	
	Uniform grit loading	12.00	psf	1/2 in. layer
	Equiv. worker loading	6.00	psf	2 workers
	Live Load =	**18.00**	psf	(Grit + Worker Loading)
	Total Design Loading (Service)	**21.13**	psf	
	Total Design Loading (Ultimate)	**126.75**	psf	(Using FS = 6)
4. Platform Cable Analysis:	Platform Cable Size	1/2	in.	dia.6x19 IWRC, EIP
(Longitudinals)	Platform Cable Weight	0.46	plf	
	Platform Cable strength.	13.30	tons	
	Platform Cable strength.	12.80	tons	(pre-tensioned with 1000 lbf)

Max. tension at center of cable span, $H = w L^2 / 8 d$

Uniform cable load,	w =	475.8	plf	
Max. cable span,	L =	25.00	ft.	
Min. req'd deflect,	d =	15.0	in	(5% of length and 12 inch min.)
Use =	d =	18.0	in	
Tension (center)	H =	12.39	tons	

Max. tension at end supports, $T = [H^2 + (w L / 2)^2]^{0.5}$

Design Cable Tension =	12.74	tons
Cable Stress Ratio	**1.00**	**>= 1.0 OK**
Use Shackle Size =	5/8	in
Working Load limit =	3.25	tons
Factor of Safety =	6	
Shackle Strength =	19.5	tons
Design Load at supports =	12.74	tons
Shackle Load Ratio =	1.53	
Shackle Check =	**Ok**	

4. Platform Support Hangers Analysis:

Max. tributary hanger area..	93.8	sq.ft.
Max. hanger load,	11883	lbf
Max. hanger load,	5.94	tons
Platform Support Hangers	3/8	in. dia. 6x19 IWRC, EIP (min)
Platform Support Hangers Weight	0.26	plf
Platform Support Hangers Strength	7.55	tons
Hanger Stress Ratio	**1.27**	**>= 1.0 OK**
Min. Chain Working Load	7100	lb (min)
Factor of Safety	4	
Chain Strength	14.2	tons
Design Load at supports =	5.94	tons
Chain Hanger Stress Ratio =	**2.39**	**>= 1.0 OK**
Use Shackle Size =	1/2	in
Working Load limit =	2.00	tons
Factor of Safety =	6	
Shackle Strength =	12	tons
Design Load at supports =	5.94	tons
Shackle Load Ratio =	2.02	
Shackle Check =	**Ok**	

A2B ENGINEERING, LLC CONSULTING ENGINEERS	Subject: Abrasive Blasting Containment Plans Bennington and Rutland County, Vermont; 5 Bridges on or over US Route 7		
	Comp by: MAT Check by: PRS	Date: 11/09/15 Job No: 187-17-1	Sheet Number:

Suspended Platform System Design (Metal Decking with 0.5625 in. dia. Platform Cable @ 5.25 ft. spacing):

1. Bridge Structure:	Max. Hanger Spacing	25.00	ft.	
2. Worker Loading:	Tributary cable width	**5.25**	ft. maximum	
	No. workers / platform cable	2	(250# ea. OSHA)	
	Equiv. worker loading	3.81	psf	
3. D+L Loading:	Metal Decking	3.00	psf	
	18-oz floor tarpaulins	0.13	psf	
	Dead Load =	3.13	psf	
	Dead Load (min) =	3.00	psf	
	Dead Load =	**3.13**	psf	
	Assume depth of grit =	1/2	in	
	Uniform grit loading	12.00	psf	1/2 in. layer
	Equiv. worker loading	4.00	psf	2 workers
	Live Load =	**16.00**	psf	(Grit + Worker Loading)
	Total Design Loading (Service)	**19.13**	psf	
	Total Design Loading (Ultimate)	**114.75**	psf	(Using FS = 6)
4. Platform Cable Analysis:	Platform Cable Size	9/16	in.	dia.6x19 IWRC, EIP
(Longitudinals)	Platform Cable Weight	0.59	plf	
	Platform Cable strength.	16.80	tons	
	Platform Cable strength.	16.30	tons	(pre-tensioned with 1000 lbf)

Max. tension at center of cable span, $H = w L^2 / 8 d$

Uniform cable load,	w =	603.0	plf	
Max. cable span,	L =	25.00	ft.	
Min. req'd deflect,	d =	15.0	in	(5% of length and 12 inch min.)
Use =	d =	18.0	in	
Tension (center)	H =	15.70	tons	

Max. tension at end supports, $T = [H^2 + (w L / 2)^2]^{0.5}$

Design Cable Tension =	16.15	tons
Cable Stress Ratio	**1.01**	**>= 1.0 OK**
Use Shackle Size =	5/8	in
Working Load limit =	3.25	tons
Factor of Safety =	6	
Shackle Strength =	19.5	tons
Design Load at supports =	16.15	tons
Shackle Load Ratio =	1.21	
Shackle Check =	**Ok**	

4. Platform Support Hangers Analysis:

Max. tributary hanger area..	131.3	sq.ft.
Max. hanger load,	15061	lbf
Max. hanger load,	7.53	tons
Platform Support Hangers	3/8	in. dia. 6x19 IWRC, EIP (min)
Platform Support Hangers Weight	0.26	plf
Platform Support Hangers Strength	7.55	tons
Hanger Stress Ratio	**1.00**	**>= 1.0 OK**
Min. Chain Working Load	7100	lb (min)
Factor of Safety	4	
Chain Strength	14.2	tons
Design Load at supports =	7.53	tons
Chain Hanger Stress Ratio =	**1.89**	**>= 1.0 OK**
Use Shackle Size =	1/2	in
Working Load limit =	2.00	tons
Factor of Safety =	6	
Shackle Strength =	12	tons
Design Load at supports =	7.53	tons
Shackle Load Ratio =	1.59	
Shackle Check =	**Ok**	

A2B ENGINEERING, LLC CONSULTING ENGINEERS	Subject: Abrasive Blasting Containment Plans Bennington and Rutland County, Vermont; 5 Bridges on or over US Route 7		
	Comp by: MAT Check by: PRS	Date: 11/09/15 Job No: 187-17-1	Sheet Number:

Alternate Support Hanger Analysis:

1. Bridge Configuration:

a.	Flange Plate Width, w =	12.00	in.	(Conservative)
b.	Flange Plate Thickness, t =	13/16	in.	(Conservative)
c.	Fy (A36) =	36	ksi	

2. D+L Loading:

e.	Dead Load =	3.00	psf	(min. platform loading)
f.	Live Load =	16.00	psf	(Grit + Workers)
g.	Total Design Loading =	19.00	psf	(e + f)

3. Hanger Loads:

h.	Max Girder Spacing =	8.00	ft	
i.	Max Diaphragm Spacing =	25.00	ft	(Conservative)
j.	Max. Tributary Hanger Area =	200.00	ft^2	(h * i)
k.	(1) Additional Worker at ea. Hanger =	250.00	lb	(conservative)
l.	Maximum Hanger Load, P =	4.05	kips	(g * j) + k

4. Analysis:

m.	Eccentricity, v =	6.0	in.	
n.	Moment, Mmax =	12.15	k-in	(l / 2 * m)
o.	Section Modulus, S =	1.32	in^3	(1/6 * 2 * m * b^2)
p.	fb = (Mmax) / Sx	9.20	ksi	
q.	Fb = 0.66 * Fy =	23.76	ksi	
r.	Capacity/Demand Ratio =	2.58		

Check: Ok

NOTE:

M = (l / 2 * k)

S = (1/6 * 2 * k * b^2)

M/S = 1.5 * l / b^2 <= 0.66 * Fy

b >= SQRT(1.5 * l / (0.66 * Fy))

r.	Flange Plate Thickness =	13/16	in.	(b)
s.	Min. Flange Plate Thickness =	0.51	in.	

Check: Ok

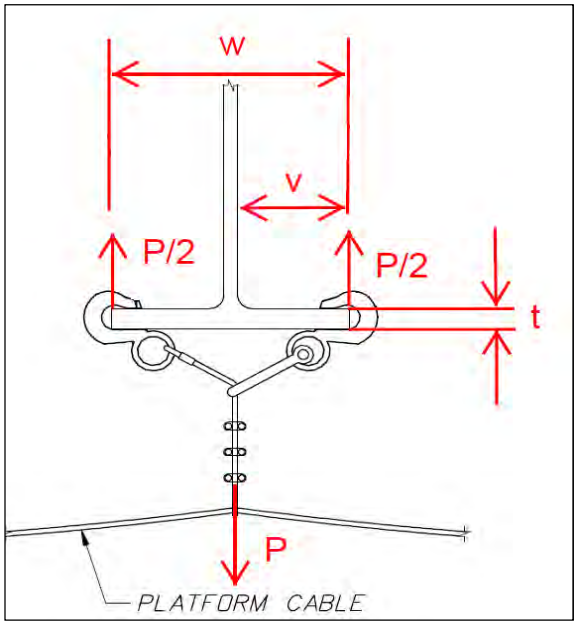

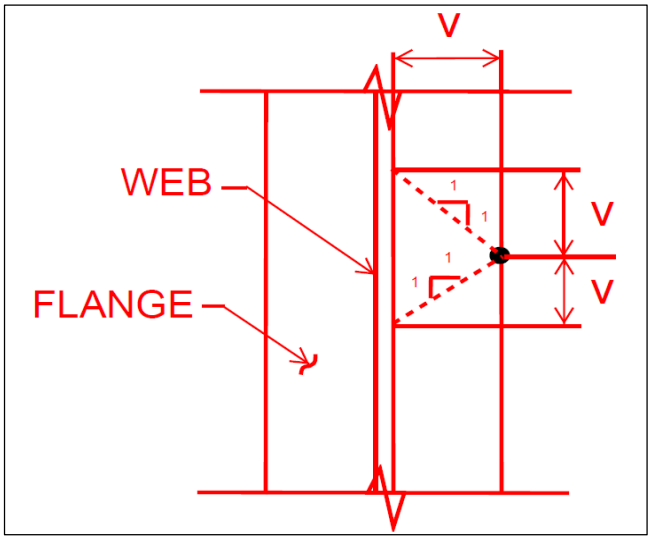

A2B ENGINEERING, LLC CONSULTING ENGINEERS	Subject: Abrasive Blasting Containment Plans Bennington and Rutland County, Vermont; 5 Bridges on or over US Route 7		
	Comp by: MAT Check by: PRS	Date: 11/09/15 Job No: 187-17-1	Sheet Number:

Diaphragm Member Analysis (Typical Support Hanger):

(Case 1: One Hanger at Midspan)
(Case 2: Two Hangers Centered)

Analyzing a 4" x 4" x 3/8" Angle

1. Bridge Configuration:

a.	Max Girder Spacing, S =	8.00	ft	
b.	Max Diaphragm Spacing =	25.00	ft	(Conservative)
c.	Bracing Angle Length =	7.00	ft	

2. Cable Installation:

d.	Longitudinal Cable Spacing =	4.00	ft	(min, 2 cables per girder)
e.	Max. Cable Spacing =	5.25	ft	

3. D+L Loading:

f.	Dead Load =	3.13	psf	(platform)
g.	Live Load =	16.00	psf	(shot + workers)
h.	Total Design Loading =	19.13	psf	

4. Hanger Loads:

i.	Max. Tributary Hanger Area =	131.25	ft^2	(b * e)
j.	(1) Additional Worker at Each Hanger =	250.00	lb	(conservative)
k.	Maximum Hanger Load, P =	2.76	kips	(h * i) + j

5. Analysis:

l.	a =	2.00	ft.	(for min. cable spacing)
m.	Case 1, Moment, Mmax =	4.83	k-ft	(k * c / 4)
n.	Case 2, Moment, Mmax =	5.52	k-ft	(k * l)
o.	Shear, Vmax = P	2.76	kips	(k, case 2 governs)
p.	4x4x3/8 Angle, Sx =	1.50	in^3	
q.	4x4x3/8 Angle, Area =	2.86	in^2	(web * depth)
r.	Fy =	36	ksi	(A36)
s.	fv = (Vmax / A)	0.97	ksi	(o / q)
t.	Fv = 0.33 * Fy =	11.88	ksi	
u.	Demand/Capacity Ratio =	12.31		

Shear Check: Ok

v.	fb = (Mmax * 12) / Sx	44.16	ksi	(m or n * 12 / p)
w.	Fb = 0.6 * Fy =	21.60	ksi	
x.	Demand/Capacity Ratio =	0.49		

Bending Check: NG

====>> THEREFORE, SUPPORT CABLES FROM END OF DIAPHRAGM MEMBERS OR CROSS BRACING MEMBERS ABOVE.

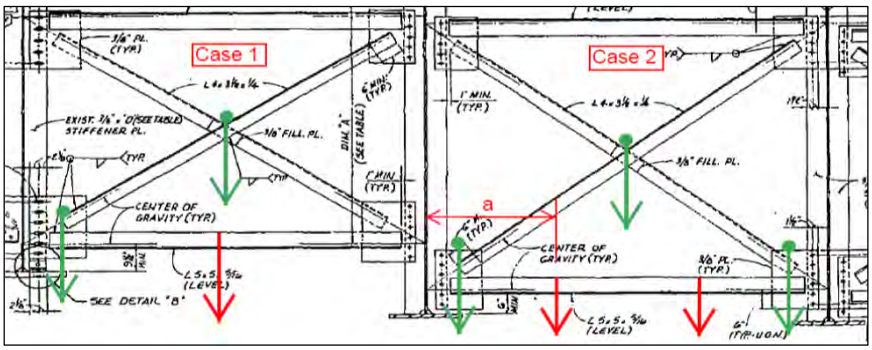

Appendix C
Scaffold Design

A2B ENGINEERING, LLC
CONSULTING ENGINEERS

A2B ENGINEERING, LLC CONSULTING ENGINEERS	Subject: Abrasive Blasting Containment Plans Bennington and Rutland County, Vermont; 5 Bridges on or over US Route 7		
	Comp by: MAT Check by: PRS	Date: 11/09/15 Job No: 187-17-1	Sheet Number:

1. Scaffold Configuration:

Length =	32	ft.
Width =	28	in.
Weight =	213	lb
Assume Weight =	220	lb

2. Abrasive Cleaning Material:

Assume 0 inch of steel shot will cover the scaffold

Depth =	0	in.
Density of the shot =	280	pcf
Weight of the shot =	0.00	psf

3. Total Loads:

With full workers and no shot

Dead Load =	220.00	lb (see note below)
Live Load =	500	lb (see note below)

NOTE: The scaffold cable carries the load from two scaffolds where the length of scaffold exceeds 32 ft.
No more than 2 workers allowed per scaffold cable

Use 1/2 " dia. 6x19 IWRC, EIP, or better

Cable diameter =	1/2	in
Cable weight =	0.46	plf
Cable strength =	13.3	tons

NOTE: The cable carries the platform DL from 2 cables

Spacing =	25	ft
PickupSpacing =	20	ft
d = 5% of PickupSpacing =	12	in.
d =	12	in.
Use d =	18	in.
Tension at the center =	3.13	kips
Tension at the support =	3.15	kips

FS of the cable = 8.43 >= 6.0 OK

Use Shackle Size =	5/8	in
Working Load limit =	3.25	tons
Working Load at supports	1.58	tons
Shackle Load Ratio =	2.06	

Shackle Check = Ok

4. Scaffold Support Hanger:

Hanger support load =	720	lb
Use =	800	lb

Use 3/8 " dia. 6x19 IWRC, EIP cables

Hanger diameter =	3/8	in
Hanger weight =	0.26	plf
Hanger strength =	7.55	tons

FS of the hanger = 18.88 >= 6.0 OK

Min. Chain working load =	7100	lb (min)
Chain Design Load =	720	lb
Use =	800	lb

Chain Hanger Stress Ratio = 8.88 >=1.0 OK

Use Shackle Size =	1/2	in
Working Load limit =	2.00	tons
Working Load at supports =	0.40	tons
Shackle Load Ratio =	5.00	

Shackle Check = Ok

5. Optional Suspended Scaffold:

Hanger support load =	610	lb per two rods
Misc. rod loads =	100	lb
3/4" diameter metal rod, Fy =	36	ksi
Total weight on one rod =	355	lb
Area 3/4" Rod =	0.44	in^2
fa = P/A =	0.80	ksi

Metal Rod Check = Ok

A2B ENGINEERING, LLC CONSULTING ENGINEERS	Subject: Abrasive Blasting Containment Plans Bennington and Rutland County, Vermont; 5 Bridges on or over US Route 7		
	Comp by: MAT Check by: PRS	Date: 11/09/15 Job No: 187-17-1	Sheet Number:

1. Scaffold Configuration:

Length =	32	ft.
Width =	28	in.
Weight =	213	lb
Assume Weight =	220	lb

2. Abrasive Cleaning Material:

Assume 1/4 inch of steel shot will cover the scaffold

Depth =	1/4	in.
Density of the shot =	280	pcf
Weight of the shot =	5.83	psf

3. Total Loads:

With full shot and no workers

Dead Load =	655.56	lb (see note below)
Live Load =	0	lb (see note below)

NOTE: The scaffold cable carries the load from two scaffolds where the length of scaffold exceeds 32 ft.
No more than 2 workers allowed per scaffold cable

Use 1/2 " dia. 6x19 IWRC, EIP, or better

Cable diameter =	1/2	in
Cable weight =	0.46	plf
Cable strength =	13.3	tons

NOTE: The cable carries the platform DL from 2 cables

Spacing =	25	ft
PickupSpacing =	20	ft
d = 5% of PickupSpacing =	12	in.
d =	12	in.
Use d =	18	in.
Tension at the center =	4.37	kips
Tension at the support =	4.38	kips

FS of the cable = 6.07 >= 6.0 OK

Use Shackle Size =	5/8	in
Working Load limit =	3.25	tons
Working Load at supports =	2.19	tons
Shackle Load Ratio =	1.48	

Shackle Check = Ok

4. Scaffold Support Hanger:

Hanger support load =	656	lb
Use =	700	lb

Use 3/8 " dia. 6x19 IWRC, EIP cables

Hanger diameter =	3/8	in
Hanger weight =	0.26	plf
Hanger strength =	7.55	tons

FS of the hanger = 21.57 >= 6.0 OK

Min. Chain working load =	7100	lb (min)
Chain Design Load =	656	lb
Use =	700	lb

Chain Hanger Stress Ratio = 10.14 >=1.0 OK

Use Shackle Size =	1/2	in
Working Load limit =	2.00	tons
Working Load at supports =	0.35	tons
Shackle Load Ratio =	5.71	

Shackle Check = Ok

5. Optional Suspended Scaffold:

Hanger support load =	328	lb per two rods
Misc. rod loads =	100	lb
3/4" diameter metal rod, Fy =	36	ksi
Total weight on one rod =	214	lb
Area 3/4" Rod =	0.44	in^2
fa = P/A =	0.48	ksi

Metal Rod Check = Ok

A2B ENGINEERING, LLC CONSULTING ENGINEERS	Subject: Abrasive Blasting Containment Plans Bennington and Rutland County, Vermont; 5 Bridges on or over US Route 7		
	Comp by: MAT Check by: PRS	Date: 11/09/15 Job No: 187-17-1	Sheet Number:

Diaphragm Member Analysis (Typical Scaffold Hanger): **Analyzing a 4" x 4" x 3/8" Angle**

1. Bridge Configuration:

a.	Max Girder Spacing, S =	8.00	ft	
b.	Max Diaphragm Spacing =	25.00	ft	(Conservative)
c.	Bracing Angle Length =	7.00	ft	

2. Cable Installation:

d.	Longitudinal Cable Spacing =	4.00	ft	(min, 2 cables per girder)
e.	Max. Cable Spaing =	5.25	ft	

3. D+L Loading:

f.	Dead Load =	220.00	lb	(Scaffold)
g.	Live Load + Shot =	500.00	lb	(Rated Load)
h.	Total Design Loading (f/2 + g) =	610.00	lb	(Each end of scaffold)

4. Hanger Loads:

i.	Max. No. of Scaffolds =	2	ea.	(per support cable)
k.	Maximum Scaffold Hanger Load, P =	1.22	kips	(I * h)

5. Analysis:

m.	Moment, Mmax =	2.14	k-ft	(k * c / 4)
o.	Shear, Vmax = P	1.22	kips	(k)
p.	4x4x3/8 Angle, Sx =	1.50	in^3	
q.	4x4x3/8 Angle, Area =	2.86	in^2	
r.	Fy =	36	ksi	(A36 Steel)
s.	fv = (Vmax / A)	0.43	ksi	(o / q)
t.	Fv = 0.33 * Fy =	11.88	ksi	
u.	Demand/Capacity Stress Ratio =	27.85		

Shear Check: Ok

v.	fb = (Mmax * 12) / Sx	17.08	ksi	(m* 12 / p)
w.	Fb = 0.6 * Fy =	21.60	ksi	
x.	Demand/Capacity Stress Ratio =	1.26		

Bending Check: Ok

==>> CONSERVATIVELY, SUPPORT CABLES FROM END OF DIAPHRAGM MEMBERS OR CROSS BRACING MEMBERS ABOVE.

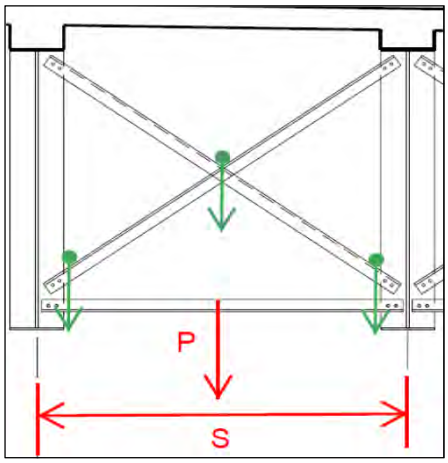

Appendix D
Miscellaneous Hardware

A2B ENGINEERING, LLC
CONSULTING ENGINEERS

Cable Anchorage Plate Connection:

Design the cable anchor plate attachment. The cable needs only sufficient tension to reduce the sag and support the cable. The connection must be designed to resist the allowable working load of the cable with a factor of safety of 4 per OSHA.

The members used to construct the paint containment platform will be checked for compliance with OSHA requirements for scaffolding - 29 CFR, Part 1910 Standard Number 1910.28:

1910.28(a)(4): Scaffolds and their components shall be capable of supporting without failure at least four times the maximum intended load.

1910.28.(a)(22): Wire or fiber rope used for scaffold suspension shall be capable of supporting at least six times the intended load.

1. Material Properties:

Nom. Strength of 0.625 " diam. 6 x 19 EIP IWRC cable =	20.6	tons
$RopeWeight_{cable}$ =	0.72	plf
Allowable Strength of cable, $T_{cable.allow}$ =	6.87	kips
Chain link platform analysis, the cable load at the support is (Service Loads):		
$P_{anchor.plate.design}$ = DL + LL_u =	19.00	psf
$Weight_{anchor.plate}$ =	100.47	plf
$T_{support.anchor.plate}$ =	5.38	kips

The allowable load in the cable exceeds the service load at the anchor plate. Therefore, use the allowable load in the cable to design the anchor plate.

Structural Steel (A36 steel):	F_{y_A36} =	36	ksi
	F_{u_A36} =	58	ksi
Weld Metal (E70XX electrodes)	F_{u_weld} =	70	ksi
	E =	29000	ksi
	d = 18 in	Lspan = 25	ft

2. Check the anchorage capacity:

3/4" diam. Anchor with a 6 5/8" embedment, $F_{t.u}$ =	10980	lbf
Allowable Tension for a 6 5/8" embedment, $F_{t.allow}$ =	2.75	kips
Number of anchors required for pure tension =	2.50	(Use 4 anchors)
Ult. shear value for a 3/4" diam. Anchor $F_{v.u}$ =	20320	lbf
Allow. Shear (3/4" diam., 6 5/8" embedment) $F_{v.allow}$ =	5.08	kips
No. Anchors required for pure shear =	1.85	

From the chain link platform analysis, the longitudinal pickup point spacing is:

Sag = atan [d / (0.5 * Longspan)] 6.84 degrees

Anchor plate connection can accommodate 4 anchors. From the analysis, a minimum of 4 wedge anchors are required. Since the cable angle from the pier cap anchorage to the anchor plate may vary, check the deck anchorage for 0, 5, 10, 15 and 20 degrees.

No. of anchors assumed:	No. Anchors =	4	
For the cable at a 0 degree angle:	Ø =	0	degrees
$f_{t.cable} = T_{cable.allow}(\sin Ø)$	$f_{t.cable}$ =	0	kips
$f_{v.cable} = T_{cable.allow}(\cos Ø)$	$f_{v.cable}$ =	6.87	kips
Combined Stress Ratio	Dem./Capacity CSR =	0.34 < 1.0 OK	

No. of anchors assumed:	No. Anchors =	4	
For the cable at a 5 degree angle:	Ø =	5	degrees
$f_{t.cable} = T_{cable.allow}(\sin Ø)$	$f_{t.cable}$ =	0.60	kips
$f_{v.cable} = T_{cable.allow}(\cos Ø)$	$f_{v.cable}$ =	6.84	kips
Combined Stress Ratio	Dem./Capacity CSR =	0.39 < 1.0 OK	

No. of anchors assumed:	No. Anchors =	4	
For the cable at a 10 degree angle:	Ø =	10	degrees
$f_{t.cable} = T_{cable.allow}(\sin Ø)$	$f_{t.cable}$ =	1.19	kips
$f_{v.cable} = T_{cable.allow}(\cos Ø)$	$f_{v.cable}$ =	6.76	kips
Combined Stress Ratio	Dem./Capacity CSR =	0.44 < 1.0 OK	

No. of anchors assumed:	No. Anchors =	4	
For the cable at a 15 degree angle:	Ø =	15	degrees
$f_{t.cable} = T_{cable.allow}(\sin Ø)$	$f_{t.cable}$ =	1.78	kips
$f_{v.cable} = T_{cable.allow}(\cos Ø)$	$f_{v.cable}$ =	6.63	kips
Combined Stress Ratio	Dem./Capacity CSR =	0.49 < 1.0 OK	

No. of anchors assumed:	No. Anchors =	4	
For the cable at a 20 degree angle:	Ø =	20	degrees
$f_{t.cable} = T_{cable.allow}(\sin Ø)$	$f_{t.cable}$ =	2.35	kips
$f_{v.cable} = T_{cable.allow}(\cos Ø)$	$f_{v.cable}$ =	6.45	kips
Combined Stress Ratio	Dem./Capacity CSR =	0.53 < 1.0 OK	

3. Weld Design:

Design for a tension load: $T_{design} = T_{cable}$, T_{design} = 41.2 kips

For a 3/4" x 5" x 5" plate, min. weld or strength, t_{weld} = 0.20 in.

Minimum weld size = 3.14 in.

Minimum weld size is 2/16"

Per AASHTO Standard Spacifications, Section 10.23.2.2, the minimum size weld for a 1" plate is 5/16" (0.3857 in.), therefore, specify the minimum weld size.

4. Determine the Minimum Connection Plate Size:

The bearing width of a 0.75 " shackle, b = 0.88 in.

Limit the allowable shear stress through the connection plate to bearing stress in pins to ASCE Manual of Steel Construction, ASD, 9th Ed., Part 5, Section D3:

$F_p = 0.45 * F_{u_A36}$ 26.1 ksi

The 1 1/4" diam. Hole is at 1 7/8" from the edge, therefore, the minimum edge dist. Is:

$d_{edge.min}$ = 1.25 in.

Shear thru plate, $f_{y.plate}$ = 6.24 ksi

Limit the allowable bearing through the connection plate to bearing stress in pins to ASCE Manual of Steel Construction, ASD 9th Ed. Part 5, Section J8:

$F_p = 0.90 * F_{u_A36}$ = 52.2 ksi

Required Plate Thickness: th_{plate} = 0.15 in.

Specify a 3/4" plate

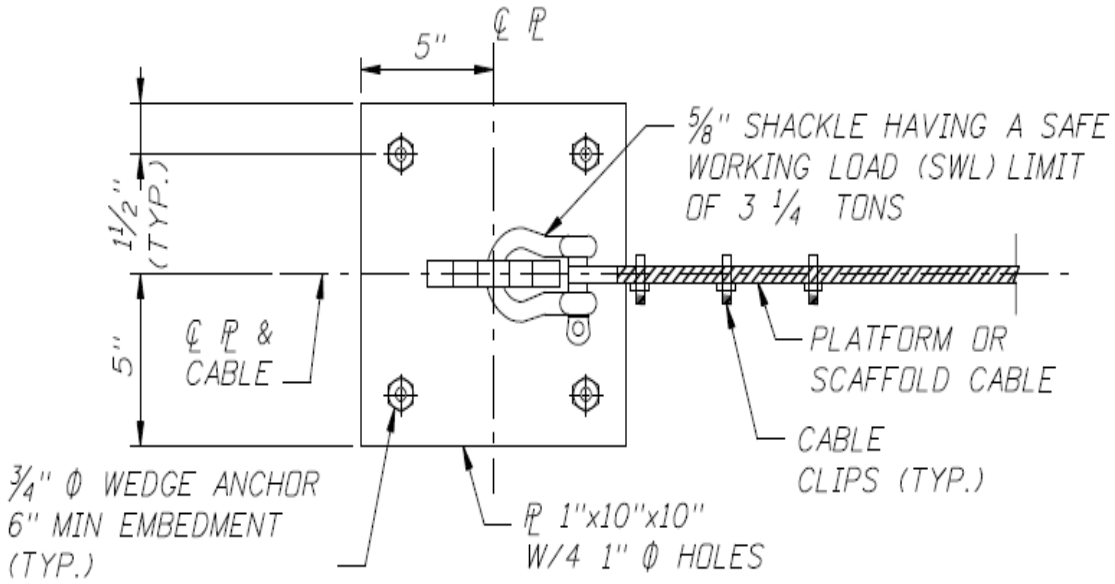

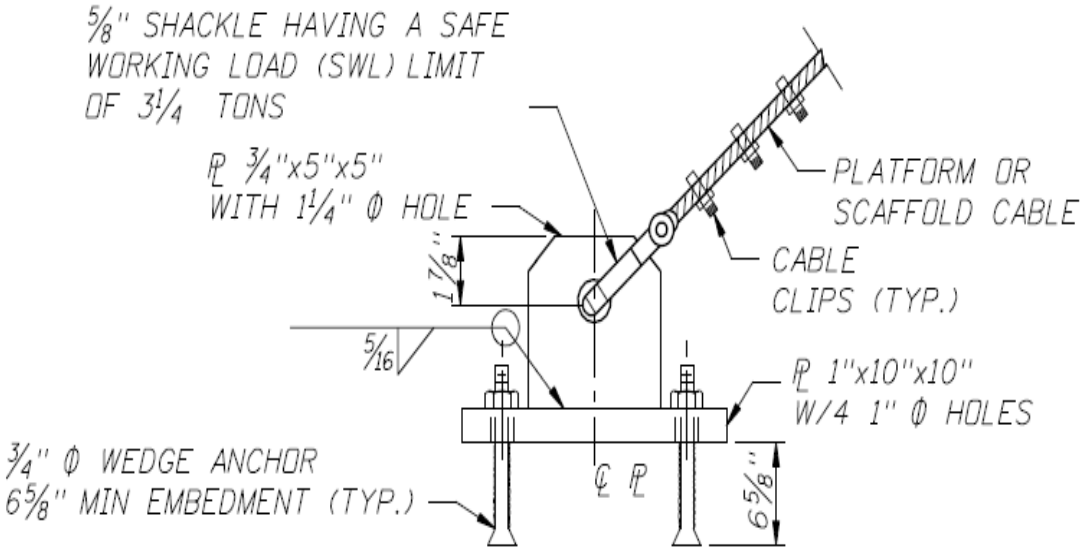

OPTIONAL ANCHOR PLATE ATTACHMENT

A2B ENGINEERING, LLC CONSULTING ENGINEERS	Subject: Abrasive Blasting Containment Plans Bennington and Rutland County, Vermont; 5 Bridges on or over US Route 7		
	Comp by: MAT Check by: PRS	Date: 11/09/15 Job No: 187-17-1	Sheet Number:

The following calculations are based on a worst-case-scenario, where 5/8" cables are tensioned.

Cable Attachment at Bearings:

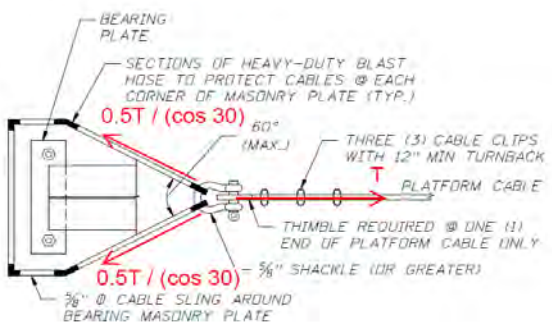

Mid Bay Cable Attachments:

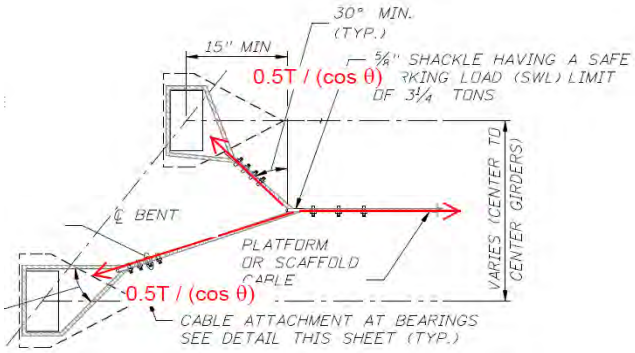

Max. Tension on 5/8" Platform Cable, T =	20.6	tons
0.5 T / (cos (max. angle/2)) = T		
Angle =	30.0	deg
Specify a Maximum Angle of =	**30.0**	**deg**

Max. Tension on 5/8" Platform Cable, T =	20.6	tons
T / cos(angle) = 2T (2 cables)		
Angle =	30.0	deg
Specify a Maximum Angle of =	**30.0**	**deg**

Transverse Cable Attachment:

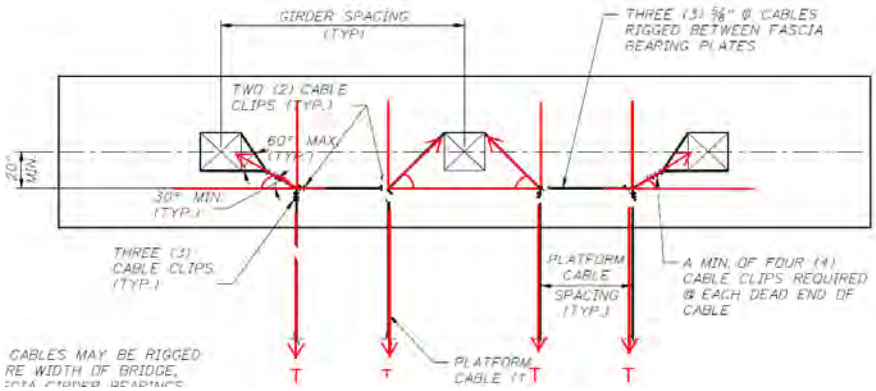

Max. Tension on 5/8" Platform Cable, T =	20.6	tons
T / cos(angle) = 3T (3 cables)		
Angle =	19.5	deg
Specify a Maximum Angle of =	**30.0**	**deg**

Max. Tension on 5/8" Platform Cable, T =	20.6	tons
T / cos(angle) = 2T (2 cables)		
Angle =	30.0	deg
Specify a Maximum Angle of =	**30.0**	**deg**

A2B ENGINEERING, LLC CONSULTING ENGINEERS	Subject: Abrasive Blasting Containment Plans Bennington and Rutland County, Vermont; 5 Bridges on or over US Route 7		
	Comp by: MAT Check by: PRS	Date: 11/09/15 Job No: 187-17-1	Sheet Number:

Alternate Transverse Cable Attachment:

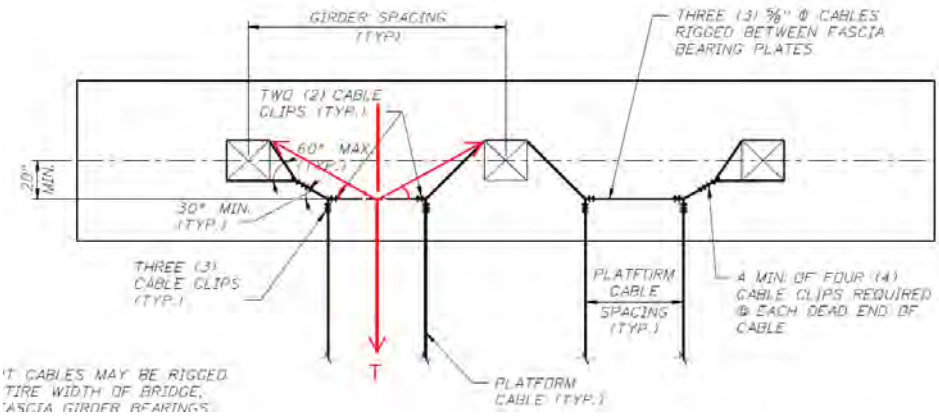

Max. Tension on 5/8" Platform Cable, T =	20.6	tons
0.5T / cos(angle) = 3T		
Angle =	9.6	deg
Specify a Maximum Angle of =	**30.0**	**deg**

Alternate Support Hanger:

1/2" Platform Support Cable:		
Max. Tension, T =	13.3	tons
0.5T /sin(angle) = T		
Angle =	30.0	deg
Specify a Minimum Angle of =	**30.0**	**deg**
(2) 1-Ton Rated Eye Hooks =	2	tons
Max. Hanger Load (Ult.) =	7.48	tons
Factor of Safety =	6	
Max. Hanger Load (Service) =	1.25	tons
Eye Hook Check:	**Ok**	

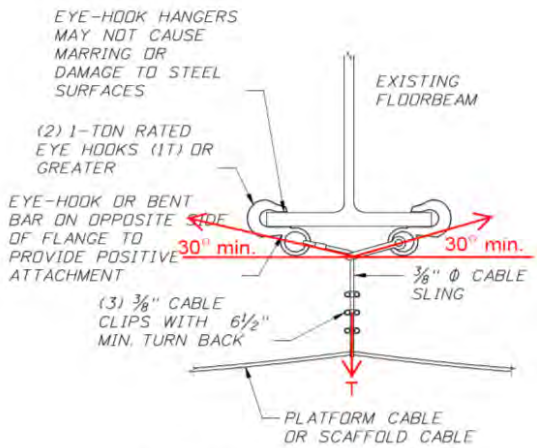

ALTERNATE SUPPORT HANGER

A2B ENGINEERING, LLC CONSULTING ENGINEERS	Subject: Abrasive Blasting Containment Plans Bennington and Rutland County, Vermont; 5 Bridges on or over US Route 7		
	Comp by: MAT Check by: PRS	Date: 11/09/15 Job No: 187-17-1	Sheet Number:

Exterior Support Hanger Calcs.

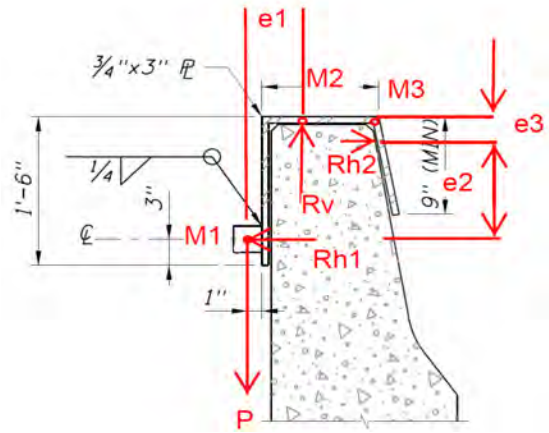

Max. Hanger Spacing =	25.00	ft.
Tributary cable width =	5.25	ft. max
Max. tributary hanger area =	65.6	ft^2
Dead Load =	3	psf
Live Load =	16	psf
Total Design Loading =	19	psf
Max. Hanger Load, P =	1246.88	lb
P = Rv =	1246.88	lb
e1 =	0.31	ft
e2 =	1.08	ft
Sum Moments: Rv*e1 - Rh2*e2 = 0		
Rh2 =	359.675	lb
Sum Horiz. Forces: Rh1 = Rh2	359.675	lb
e3 =	0.17	ft
M2 =	389.648	lb-ft
S Plate =	0.28	in^3
fb = M / S =	16.63	ksi
Fy =	36	ksi
Fb = 0.67 * Fy =	24.12	ksi
Capacity/Demand Ratio =	1.45	
Check:	**Ok**	
M3 =	59.95	lb-ft
S Plate =	0.28	in^3
fb = M / S =	2.56	ksi
Fy =	36	ksi
Fb = 0.67 * Fy =	24.12	ksi
Capacity/Demand Ratio =	9.43	
Check:	**Ok**	

Intermediate Containment Support Analysis:

Use a TS 4x4x1/4 supported on the bridge beams bottom flanges for the intermediate pickup point supports.

TS 4 x 4 x 1/4:

DL_{TS} =	12.21	plf	I_{TS} =	7.8	in^4
A_{TS} =	3.37	in^2	T_{ts} =	0.233	in
B_{ts} =	4	in	b_Tts =	14.2	-
S_{TS} =	3.9	in^3	h_T_{ts} =	14.2	-
h_{TS} =	4	in	F_{yHSS} =	46	KSI

(ASTM A-500, Grade B)

Check Shear:

Tributary Cable Width =	5.25	ft
Max. Hanger Spacing =	25	ft
Dead Load =	3.00	psf
Live Load =	16.00	psf
Support Load on the TS 4 x 4 x 1/4 =	2493.75	lbf
fv =	3.01	ksi
$0.33*F_{yHSS}$ =	15.18	ksi
Capacity/Demand Ratio =	5.04	

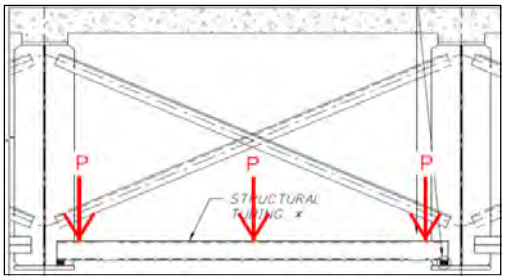

Conservative to use 3 loads P on tubing

TS Check for Shear: Ok

Bending Analysis:

Check the max. bending moment in the TS with the cable load centered between two girders.
Reference AISC Beam Equation 7

Max. Girder Spacing =	9.5	ft
M_{max} =	5.92	kip-ft (M = PL/4)
fy = M_{max}/S_{TS} =	18.22	ksi
$0.6*F_{yHSS}$ =	27.60	ksi
Capacity/Demand Ratio =	1.51	

TS Check for Bending: Ok

Check the max. bending moment in the TS with two cable loads centered between two girders.
Reference AISC 9th edition Beam Equation 41

Mmax =	6.20	kip-ft
fy = Mmax/STS =	19.09	ksi
$0.6*F_{yHSS}$ =	27.60	ksi
Capacity/Demand Ratio =	1.45	

TS Check for Bending: Ok

Intermediate Containment Support Analysis:

Use a TS 4x4x3/8 supported on the bridge beams bottom flanges for the intermediate pickup point supports.

TS 4 x 4 x 3/8:

DL_{TS} =	17.2	plf	I_{TS} =	10.3	in^4
A_{TS} =	4.78	in^2	T_{ts} =	0.349	in
B_{ts} =	4	in	b_Tts =	8.46	-
S_{TS} =	5.13	in^3	h_T_{ts} =	8.46	-
h_{TS} =	4	in	F_{yHSS} =	46	KSI (ASTM A-500, Grade B)

Check Shear:

Tributary Cable Width =	5.25	ft
Max. Hanger Spacing =	25	ft
Dead Load =	3.00	psf
Live Load =	16.00	psf
Support Load on the TS 4 x 4 x 3/8=	2493.75	lbf
fv =	2.01	ksi
$0.33*F_{yHSS}$ =	15.18	ksi
Capacity/Demand Ratio =	7.55	

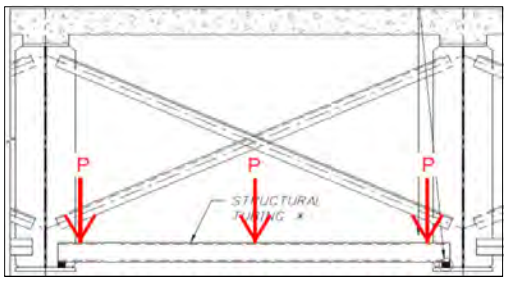

Conservative to use 3 loads P on tubing

TS Check for Shear: Ok

Bending Analysis:

Check the max. bending moment in the TS with the cable load centered between two girders.
Reference AISC Beam Equation 7

Max. Girder Spacing =	11	ft
M_{max} =	6.86	kip-ft (M = PL/4)
fy = M_{max}/S_{TS} =	16.04	ksi
$0.6*F_{yHSS}$ =	27.60	ksi
Capacity/Demand Ratio =	1.72	

TS Check for Bending: Ok

Check the max. bending moment in the TS with two cable loads centered between two girders.
Reference AISC 9th edition Beam Equation 41

Mmax =	7.95	kip-ft
fy = Mmax/STS =	18.60	ksi
$0.6*F_{yHSS}$ =	27.60	ksi
Capacity/Demand Ratio =	1.48	

TS Check for Bending: Ok

Tubular Steel Outriggers

A. **Load on Outrigger -**

Dead Load =	3.00	psf
Live Load =	16.00	psf
Anticipated Uniform Load =	**19.00**	**psf**

B. For a maximum 25.00 -ft. outrigger spacing, an estimated platform dead & live loading of 19.00 psf and 1 worker at the end of the outrigger, the max. anticipated load for which the outrigger is to be designed is:

Max. Cable Spacing = 5.25 ft.
Tributary Width = 2.63 ft.

P = (25.00)x(2.63)x(19.0) + 250 lbs = **1,497 lbs.**
SPACING WIDTH DL + LL WORKER

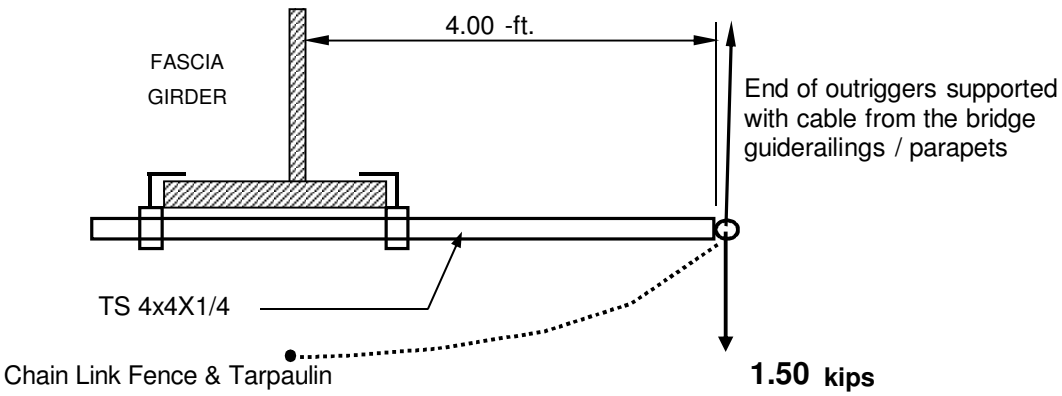

C. Maximum moment, M, on end of cantilever outrigger arm

M = (1.50)x(4.00) = **5.99** k-ft
KIPS ARM

D. Analyzing a TS 4x4X1/4 outrigger arm, S_x = 3.90 in^3
Fy = 46 ksi , ASTM A-500, Grade B

fy = 5.99 k-ft x (12) / 3.90 in^3 = **18.4 ksi < 27.6 ksi OK**
(0.6 x 46 ksi)

fv = 1.497 kip / (2 x 3 in x 0.25 in.) = **1.00 ksi < 15.18 ksi OK**
(0.33 x 46 ksi)

Note: Each outrigger is to be supported from the bridge parapets or guide railing posts above to eliminate the cantilever bending within the outrigger arm.

A2B ENGINEERING, LLC CONSULTING ENGINEERS	Subject: Abrasive Blasting Containment Plans Bennington and Rutland County, Vermont; 5 Bridges on or over US Route 7		
	Comp by: MAT Check by: PRS	Date: 11/09/15 Job No: 187-17-1	Sheet Number:

Typical Outrigger Connection Calculations:

A. Plate Check:

Plate Width, b =	3	in.	
Plate Thickness, h =	0.5	in.	
Section Modulus, S =	0.125	$in.^3$	
Minimum Yield Stress, F_y =	36	ksi	
Moment on Outrigger, M_{out} =	71.85	kip-in	(Due to DL + LL)
Flange Width, b_f =	12	in.	(Conservative)
Eccentricity, e =	10	in.	
Reaction, M/e =	7.19	kips	
Moment Arm, a =	0.75	in.	
Moment on Plate, M_{pl}=	5.39	kip-in	
Bending Stress, f_b =	43.11	ksi	
Allow. Bending Stress, F_b =	21.6	ksi	
Capacity/Demand Ratio =	0.50		

Plate Check: NG

===>> Therefore, support each outrigger from the bridge parapets or guide railing posts above to eliminate the cantilever bending within the outrigger arm.

B. Weld Check:

Weld Size =	3/16	in.	
Fillet Metal Strength =	70	ksi	
Weld Effective Area, A_e =	0.80	$in.^2$	
Nom. Stress Weld Metal, F_{nw} =	42	ksi	(AISC 14th Ed.- Table J2.5)
Reaction =	3.59	kips	
Weld Design Strength, R_n =	33.41	kips	(AISC 14th Ed.- Eqn. J2-3)
Capacity/Demand Ratio =	9.30		

Weld Check: OK

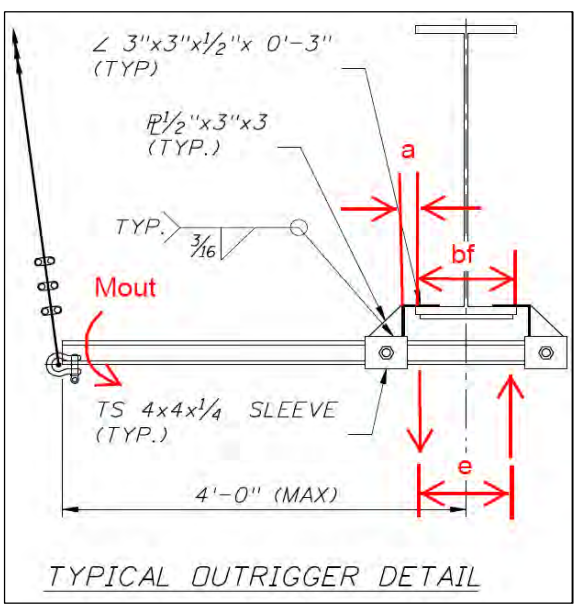

Chain-Link Fence Design

A. Based on a 5.25 ft. maximum cable spacing, a maximum estimated sag of 3.15 in. (approx. 5 % of support cable spacing), and a maximum allowable platform load of 31 psf, the maximum tension in the fence wires at center span between the platform cables will be:
H = (wL^2 + 2PL) / 8d. Chain link design is based on a maximum of 1 in. depth of steel shot.

Where :
w = Uniform platform loading = 31.00 psf (1" steel shot)
L = Maximum cable spacing = 5.25 ft.
d = Maximum sag in fence = 0.263 ft. between cables
P = 1 worker between cables = 250 lbs.

H = **1,657 lbs**

B. The fence to be used on this project is constructed from 9-gage wire (0.148" dia.) with a nominal strength of 1290 lbs. Since the wire mesh has a grid spacing of 2 in. on a 45-degree angle, the resulting load bearing capacity of the fence panels on a "per-linear-foot" basis is calculated at:

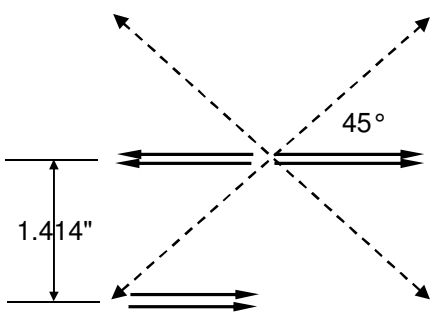

T des = 2 x 0.707 x 1,290 lbs = **1,824 lbs**
perpendicular to support cables

"Per lineal foot", T allow = (12" / 2.828") x 1,824 # = **7,740 lbs**

C. Checking the OSHA '4-to-1' F.S. required for platform components, the resulting safety factor is = 7,740 lbs / 1,657 lbs = **4.7 > 4.0 Ok**

D. Since the sag within the fence (between platform cables) may be greater than the sag used in the calculation, especially when the workers are within the belly' of the fence, the actual tension in the fence wire may be less than the 1,657 #, which will result in a greater factor of safety.

E. Containment platform shall be constructed with chain link fence having a 2" mesh & 9 gauge wire, or netting (meeting ANSI A10.11 & osha 1926.500 Subpart M). Secure fence to cable with 1/4" diam. Rope ties or cable clips.

Trubolt Wedge Type Anchor

Performance Data (2 pages)

Product Information: Suggested Specifications
Selection and Order Information (2 pages)
Installation Instructions :Approvals and Listing

PERFORMANCE TABLE

Trubolt Wedge Anchors			*Ultimate Tension and Shear Values (Lbs/kN) in Concrete**						
ANCHOR DIA In. (mm)	INSTALLATION TORQUE Ft. Lbs (Nm)	EMBEDMENT DEPTH In. (mm)	ANCHOR TYPE	f'c = 2000 PSI (13.8 MPa)		f'c = 4000 PSI (27.6 MPa)		f'c = 6000 PSI (41.4 MPa)	
				TENSION Lbs. (kN)	SHEAR Lbs. (kN)	TENSION Lbs. (kN)	SHEAR Lbs. (kN)	TENSION Lbs. (kN)	SHEAR Lbs. (kN)
1/4 (6.4)	4 (5.4)	1-1/8 (28.6) 1-15/16 (49.2) 2-1/8 (54.0)	WS-Carbon or WS-G Hot-Dipped Galvanized or WW-304 S.S. or SWW-316 S.S.	1,180 (5.2) 2,100 (9.3) 2,260 (10.1)	1,400 (6.2) 1,680 (7.5) 1,680 (7.5)	1,780 (7.9) 3,300 (14.7) 3,300 (14.7)	1,400 (6.2) 1,680 (7.5) 1,680 (7.5)	1,900 (8.5) 3,300 (14.7) 3,300 (14.7)	1,400 (6.2) 1,680 (7.5) 1,680 (7.5)
3/8 (9.5)	25 (33.9)	1-1/2 (38.1) 3 (76.2) 4 (101.6)		1,680 (7.5) 3,480 (15.5) 4,800 (21.4)	2,320 (10.3) 4,000 (17.8) 4,000 (17.8)	2,240 (10.0) 5,940 (26.4) 5,940 (26.4)	2,620 (10.3) 4,140 (18.4) 4,140 (18.4)	2,840 (12.6) 6,120 (27.2) 6,120 (27.2)	3,160 (14.1) 4,500 (20.0) 4,500 (20.0)
1/2 (12.7)	55 (74.6)	2-1/4 (57.2) 4-1/8 (104.8) 6 (152.4)		4,660 (20.7) 4,660 (20.7) 5,340 (23.8)	4,760 (21.2) 7,240 (32.2) 7,240 (32.2)	5,100 (22.7) 9,640 (42.9) 9,640 (42.9)	4,760 (21.2) 7,240 (32.2) 7,240 (32.2)	7,040 (31.3) 10,820 (48.1) 10,820 (48.1)	7,040 (31.3) 8,160 (36.3) 8,160 (36.3)
5/8 (15.9)	90 (122.0)	2-3/4 (69.9) 5-1/8 (130.2) 7-1/2 (190.5)		6.580 (29.3) 6.580 (29.3) 7,060 (31.4)	7,120 (31.7) 9,600 (42.7) 9,600 (42.7)	7,180 (31.9) 14,920 (66.4) 15,020 (66.8)	7,120 (31.7) 11,900 (52.9) 11,900 (52.9)	9,720 (43.2) 16,380 (72.9) 16,380 (72.9)	9,616 (42.8) 12,520 (55.7) 12,520 (55.7)
3/4 (19.1)	110 (149.2)	3-1/4 (82.6) 6-5/8 (168.3) 10 (254.0)		7,120 (31.7) 10,980 (48.8) 10,980 (48.8)	10,120 (45.0) 20,320 (90.4) 20,320 (90.4)	10,840 (48.2) 17,700 (78.7) 17,880 (79.5)	13,720 (61.0) 23,740 (105.6) 23,740 (105.6)	13,300 (59.2) 20,260 (90.1) 23,580 (104.9)	15,980 (71.1) 23,740 (105.6) 23,740 (105.6)
7/8 (22.2)	250 (339.0)	3-3/4 (95.3) 6-1/4 (158.8) 8 (203.2)		9,520 (42.3) 14,660 (65.2) 14,660 (65.2)	13,160 (58.5) 20,880 (92.9) 20,880 (92.9)	14,740 (65.6) 20,940 (93.1) 20,940 (93.1)	16,580 (73.8) 28,800 (128.1) 28,800 (128.1)	17,420 (77.5) 24,360 (108.4) 24,360 (108.4)	19,160 (85.2) 28,800 (128.1) 28,800 (128.1)
1 (25.4)	300 (406.7)	4-1/2 (114.3) 7-3/8 (187.3) 9-1/2 (241.3)		13,940 (62.0) 14,600 (64.9) 18,700 (83.2)	16,080 (71.5) 28,680 (127.6) 28,680 (127.6)	20,180 (89.8) 23,980 (106.7) 26,540 (118.1)	22,820 (101.5) 37,940 (168.8) 37,940 (168.8)	21,180 (94.2) 33,260 (148.0) 33,260 (148.0)	24,480 (108.9) 38,080 (169.4) 38,080 (169.4)

* Allowable values are based upon a 4 to 1 safety factor. Divide by 4 for allowable load values.
* For Tie-Wire Wedge Anchor, TW-1400, use tension data from 1/4" diameter with 1-1/8" embedment.

PERFORMANCE TABLE

Trubolt Wedge Anchors			*Ultimate Tension and Shear Values (Lbs/kN) in Lightweight Concrete**				
ANCHOR DIA In. (mm)	INSTALLATION TORQUE Ft. Lbs (Nm)	EMBEDMENT DEPTH In. (mm)	ANCHOR TYPE	LIGHTWEIGHT CONCRETE f'c = 3000 PSI 20.7 MPa)		LOWER FLUTE OF STEEL DECK WITH LIGHTWEIGHT CONCRETE FILL f'c = 2000 PSI (13.8 MPa)	
				TENSION Lbs. (kN)	SHEAR Lbs. (kN)	TENSION Lbs. (kN)	SHEAR Lbs. (kN)
3/8 (9.5)	25 (33.9)	1-1/2 (38.1) 3 (76.2)	WS-Carbon or WS-G Hot-Dipped Galvanized or WW-304 S.S. or SWW-316 S.S.	1,175 (5.2) 2,825 (12.6)	1,480 (6.6) 2,440 (10.9)	1,900 (8.5) 2,840 (12.6)	3,160 (14.1) 4,000 (17.8)
1/2 (12.7)	55 (74.6)	2-1/4 (57.2) 3 (76.2) 4 (101.6)		2,925 (13.0) 3,470 (15.4) 4,290 (19.1)	2,855 (12.7) 3,450 (15.3) 3,450 (15.3)	3,400 (15.1) 4,480 (19.9) 4,800 (21.4)	5,380 (23.9) 6,620 (29.4) 6,440 (28.6)
5/8 (15.9)	90 (122.0)	3 (76.2) 5 (127.0)		4,375 (19.5) 6,350 (28.2)	4,360 (19.4) 6,335 (28.2)	4,720 (21.0) 6,580 (29.3)	5,500 (24.5) 9,140 (40.7)
3/4 (19.1)	110 (149.2)	3-1/4 (82.6) 5-1/4 (133.4)		5,390 (24.0) 7,295 (32.5)	7,150 (31.8) 10,750 (47.8)	5,840 (26.0) 7,040 (31.3)	8,880 (39.5) --- ---

* Allowable values are based upon a 4 to 1 safety factor. Divide by 4 for allowable load values.

Forged Wire Rope Clips

SEE APPLICATION AND WARNING INFORMATION

Para Español: www.thecrosbygroup.com

On Page 56

G-450

- Each base has a Product Identification Code (PIC) for material traceability, the name CROSBY or CG, and a size forged into it.
- Based on the catalog breaking strength of wire rope, Crosby wire rope clips have an efficiency rating of 80% for 1/8" - 7/8" sizes, and 90% for sizes 1" through 3-1/2".
- Entire Clip-Galvanized to resist corrosive and rusting action.
- Sizes 1/8" through 2-1/2" and 3" have forged bases.
- All Clips are individually bagged or tagged with proper application instructions and warning information.
- Clip sizes up through 1-1/2" have rolled threads.
- Meets or exceeds all requirements of ASME B30.26 including identification, ductility, design factor, proof load and temperature requirements. Importantly, these wire rope clips meet other critical performance requirements including fatigue life, impact properties and material traceability, not addressed by ASME B30.26.
- Look for the Red-U-Bolt®, your assurance of Genuine Crosby Clips.

Crosby Clips, all sizes 1/4" and larger, meet the performance requirements of Federal Specification FF-C-450 TYPE 1 CLASS 1, except for those provisions required of the contractor. For additional information, see page 444.

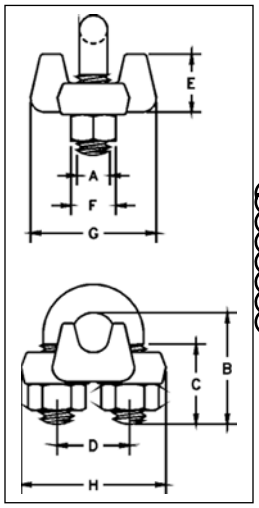

G-450 Crosby® Clips

Rope Size (in.)	Rope Size (mm)	G-450 Stock No.	Std. Package Qty.	Weight Per 100 (lbs.)	Dimensions (in.) A	B	C	D	E	F	G	H
1/8	3-4*	1010015	100	6	.22	.72	.44	.47	.37	.38	.81	.99
3/16*	5*	1010033	100	10	.25	.97	.56	.59	.50	.44	.94	1.18
1/4	6-7	1010051	100	19	.31	1.03	.50	.75	.66	.56	1.19	1.43
5/16	8	1010079	100	28	.38	1.38	.75	.88	.73	.69	1.31	1.66
3/8	9-10	1010097	100	48	.44	1.50	.75	1.00	.91	.75	1.63	1.94
7/16	11	1010113	50	78	.50	1.88	1.00	1.19	1.13	.88	1.91	2.28
1/2	12-13	1010131	50	80	.50	1.88	1.00	1.19	1.13	.88	1.91	2.28
9/16	14-15	1010159	50	109	.56	2.25	1.25	1.31	1.34	.94	2.06	2.50
5/8	16	1010177	50	110	.56	2.25	1.25	1.31	1.34	.94	2.06	2.50
3/4	18-20	1010195	25	142	.62	2.75	1.44	1.50	1.39	1.06	2.25	2.84
7/8	22	1010211	25	212	.75	3.12	1.62	1.75	1.58	1.25	2.44	3.16
1	24-26	1010239	10	252	.75	3.50	1.81	1.88	1.77	1.25	2.63	3.47
1-1/8	28-30	1010257	10	283	.75	3.88	2.00	2.00	1.91	1.25	2.81	3.59
1-1/4	32-34	1010275	10	438	.88	4.44	2.22	2.34	2.17	1.44	3.13	4.13
1-3/8	36	1010293	10	442	.88	4.44	2.22	2.34	2.31	1.44	3.13	4.19
1-1/2	38	1010319	10	544	.88	4.94	2.38	2.59	2.44	1.44	3.41	4.44
1-5/8	41-42	1010337	Bulk	704	1.00	5.31	2.62	2.75	2.66	1.63	3.63	4.75
1-3/4	44-46	1010355	Bulk	934	1.13	5.75	2.75	3.06	2.92	1.81	3.81	5.24
2	48-52	1010373	Bulk	1300	1.25	6.44	3.00	3.38	3.03	2.00	4.44	5.88
2-1/4	56-58	1010391	Bulk	1600	1.25	7.13	3.19	3.88	3.19	2.00	4.56	6.38
2-1/2	62-65	1010417	Bulk	1900	1.25	7.69	3.44	4.13	3.69	2.00	4.69	6.63
** 2-3/4	** 68-72	1010435	Bulk	2300	1.25	8.31	3.56	4.38	4.88	2.00	5.00	6.88
3	75-78	1010453	Bulk	3100	1.50	9.19	3.88	4.75	4.44	2.38	5.31	7.61
** 3-1/2	** 85-90	1010426	Bulk	4000	1.50	10.75	4.50	5.50	6.00	2.38	6.19	8.38

* Electro-plated U-Bolt and Nuts. ** 2-3/4" and 3-1/2" base is made of cast steel.

SS-450

- Each base has a Product Identification Code (PIC) for material traceability, the name CROSBY or "CG", and a size forged into it.
- Entire clip is made from 316 Stainless Steel to resist corrosive and rusting action.
- All components are Electro-Polished.
- All Clips are individually bagged or tagged with proper application instructions and warning information.

SS-450 Stainless Steel Wire Rope Clips

Rope Size (in.)	Rope Size (mm)	SS-450 Stock No.	Std. Package Qty.	Weight Per 100 (lbs.)	Dimensions (in.) A	B	C	D	E	F	G	H
1/8	3-4	1011250	Bulk	6	.22	.72	.44	.47	.41	.38	.81	.94
3/16	5	1011261	Bulk	10	.25	.97	.56	.59	.50	.44	.94	1.16
1/4	6-7	1011272	Bulk	20	.31	1.03	.50	.75	.66	.56	1.19	1.44
3/8	9-10	1011283	Bulk	47	.44	1.50	.75	1.00	.91	.75	1.63	1.94
1/2	12-13	1011305	Bulk	77	.50	1.88	1.00	1.19	1.13	.88	1.91	2.28
5/8	16	1011327	Bulk	106	.56	2.38	1.25	1.31	1.34	.94	2.06	2.50

Copyright © 2013 The Crosby Group LLC
All Rights Reserved

Include 4 cable clips

CROSBY® CLIPS WARNINGS AND APPLICATION INSTRUCTIONS

G-450
(Red-U-Bolt®)

SS-450
(316 Stainless Steel)

⚠WARNING

- **Failure to read, understand, and follow these instructions may cause death or serious injury.**
- **Read and understand these instructions before using clips.**
- **Match the same size clip to the same size wire rope.**
- **Prepare wire rope end termination only as instructed.**
- **Do not use with plastic coated wire rope.**
- **Apply first load to test the assembly. This load should be of equal or greater weight than loads expected in use. Next, check and retighten nuts to recommended torque (See Table 1).**

Efficiency ratings for wire rope end terminations are based upon the minumum breaking force of wire rope. The efficiency rating of a properly prepared loop or thimble-eye termination for clip sizes 32 mm through 22mm is 80%, and for sizes 25.5 mm through 88.9 mm is 90%.

The number of clips shown (see Table 1) is based upon using RRL or RLL wire rope, 6 x 19 or 6 x 36 Class, FC or IWRC; IPS or XIP, XXIP. If Seale construction or similar large outer wire type construction in the 6 x 19 Class is to be used for sizes 1 inch and larger, add one additional clip. If a pulley (sheave) is used for turning back the wire rope, add one additional clip.

The number of clips shown also applies to rotation-resistant RRL wire rope, 8 x 19 Class, IPS, XIP, XXIP sizes 1-1/2 inch and smaller; and to rotation-resistant RRL wire rope, 19 x 7 Class, IPS, XIP, XXIP sizes 1-3/4 inch and smaller.

For other classes of wire rope not mentioned above, we recommend contacting Crosby Engineering to ensure the desired efficiency rating.

For elevator, personnel hoist, and scaffold applications, refer to ANSI A17.1 and ANSI A10.4. These standards do not recommend U-Bolt style wire rope clip terminations. The style wire rope termination used for any application is the obligation of the user.

For OSHA (Construction) applications, see OSHA 1926.251.

1. Refer to Table 1 in following these instructions. Turn back specified amount of rope from thimble or loop.

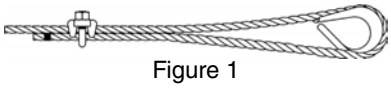

Figure 1

Apply first clip one base width from dead end of rope. Apply U-Bolt over dead end of wire rope – live end rests in saddle (Never saddle a dead horse!). Use torque wrench to tighten nuts evenly, alternate from one nut to the other until reaching the recommended torque. (See Figure 1)

2. When two clips are required, apply the second clip as near the loop or thimble as possible. Use torque wrench to tighten nuts evenly, alternating until reaching the recommended torque. When more than two clips are required, apply the second clip as near the loop or thimble as possible, turn nuts on second clip firmly, but do not tighten. (See Figure 2)

Figure 2

3. When three or more clips are required, space additional clips equally between first two – take up rope slack – use torque wrench to tighten nuts on each U-Bolt evenly, alternating from one nut to the other until reaching recommended torque. (See Figure 3)

Figure 3

4. If a pulley (sheave) is used in place of a thimble, add one additional clip. Clip spacing should be as shown. (See Figure 4)

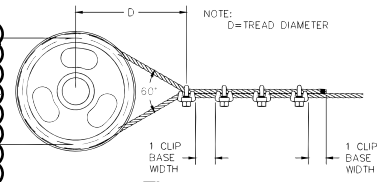

Figure 4

5. WIRE ROPE SPLICING PROCEDURES:

The preferred method of splicing two wire ropes together is to use inter-locking turnback eyes with thimbles using the recommended number of clips on each eye (See Figure 5).

Figure 5

An alternate method is to use twice the number of clips as used for a turnback termination. The rope ends are placed parallel to each other, overlapping by twice the turnback amount shown in the application instructions. The minimum number of clips should be installed on each dead end (See Figure 6). Spacing, installation torque, and other instructions still apply.

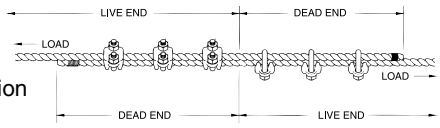

Figure 6

6. IMPORTANT

Apply first load to test the assembly. This load should be of equal or greater weight than loads expected in use. Next, check and use torque wrench to retighten nuts to recommended torque. In accordance with good rigging and maintenance practices, the wire rope end termination should be inspected periodically for wear, abuse, and general adequacy.

Table 1

Clip Size (in.)	Rope Size (mm)	Minimum No. of Clips	Amount of Rope to Turn Back in mm	*Torque in Nm
1/8	3-4	2	85	6.1
3/16	5	2	95	10.2
1/4	6-7	2	120	20.3
5/16	8	2	133	40.7
3/8	9-10	2	165	61.0
7/16	11-12	2	178	68
1/2	13	3	292	88
9/16	14-15	3	305	129
5/8	16	3	305	129
3/4	19-20	4	460	176
7/8	22	4	480	305
1	24-25	5	660	305
1-1/8	28-30	6	860	305
1-1/4	33-34	7	1120	488
1-3/8	36	7	1120	488
1-1/2	38-40	8	1370	488
1-5/8	41-42	8	1470	583
1-3/4	44-46	8	1550	800
2	48-52	8	1800	1017
2-1/4	56-58	8	1850	1017
2-1/2	62-65	9	2130	1017
2-3/4	68-72	10	2540	1017
3	75-78	10	2690	1627
3-1/2	85-90	12	3780	1627

If a pulley (sheave) is used for turning back the wire rope, add one additional clip. See Figure 4.

If a greater number of clips are used than shown in the table, the amount of turnback should be increased proportionately.

*The tightening torque values shown are based upon the threads being clean, dry, and free of lubrication.

Copyright © 2013 The Crosby Group LLC
All Rights Reserved

Crosby® Round Pin Shackles

Load Rated® Fatigue Rated® "QT" QUENCHED & TEMPERED QUIC-CHECK® MAXTOUGH®

ROUND PIN ANCHOR SHACKLES

G-213 S-213

Round pin anchor shackles meet the performance requirements of Federal Specification RR-C-271D Type IVA, Grade A, Class 1, except for those provisions required of the contractor.

- Capacities 1/2 thru 35 metric tons.
- Forged - Quenched and Tempered, with alloy pins.
- Working Load Limit permanently shown on every shackle.
- Hot Dip galvanized or Self Colored.
- Fatigue rated.
- Shackles 25t and larger are **RFID EQUIPPED**.
- Shackles can be furnished proof tested with certificates to designated standards, such as ABS, DNV, Lloyds, or other certification. Charges for proof testing and certification available when requested at the time of order.
- Shackles are Quenched and Tempered and can meet DNV impact requirements of 42 joules at -20 degree C.
- Look for the Red Pin® . . . the mark of genuine Crosby quality.

ROUND PIN CHAIN SHACKLES

G-215 S-215

Round pin chain shackles meet the performance requirements of Federal Specification RR-C-271D Type IVB, Grade A, Class 1, except for those provisions required of the contractor.

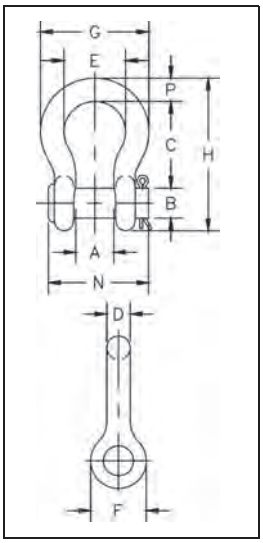

G-213 S-213

Nominal Size (in.)	Working Load Limit (t)*	Stock No. G-213	Stock No. S-213	Weight Each (lbs.)	Dimensions (in.) A	B	C	D	E	F	G	H	N	P	Tolerance + / - C	A
1/4	1/2	1018017	1018026	.13	.47	.31	1.13	.25	.78	.61	1.28	1.84	1.34	.25	.06	.06
5/16	3/4	1018035	1018044	.18	.53	.38	1.22	.31	.84	.75	1.47	2.09	1.59	.31	.06	.06
3/8	1	1018053	1018062	.29	.66	.44	1.44	.38	1.03	.91	1.78	2.49	1.86	.38	.13	.06
7/16	1-1/2	1018071	1018080	.38	.75	.50	1.69	.44	1.16	1.06	2.03	2.91	2.13	.44	.13	.06
1/2	2	1018099	1018106	.71	.81	.63	1.88	.50	1.31	1.19	2.31	3.28	2.38	.50	.13	.06
5/8	3-1/4	1018115	1018124	1.50	1.06	.75	2.38	.63	1.69	1.50	2.94	4.19	2.91	.69	.13	.06
3/4	4-3/4	1018133	1018142	2.32	1.25	.88	2.81	.75	2.00	1.81	3.50	4.97	3.44	.81	.25	.06
7/8	6-1/2	1018151	1018160	3.49	1.44	1.00	3.31	.88	2.28	2.09	4.03	5.83	3.81	.97	.25	.06
1	8-1/2	1018179	1018188	5.00	1.69	1.13	3.75	1.00	2.69	2.38	4.69	6.56	4.53	1.06	.25	.06
1-1/8	9-1/2	1018197	1018204	6.97	1.81	1.25	4.25	1.13	2.91	2.69	5.16	7.47	5.13	1.25	.25	.06
1-1/4	12	1018213	1018222	9.75	2.03	1.38	4.69	1.29	3.25	3.00	5.75	8.25	5.50	1.38	.25	.06
1-3/8	13-1/2	1018231	1018240	13.25	2.25	1.50	5.25	1.42	3.63	3.31	6.38	9.16	6.13	1.50	.25	.13
1-1/2	17	1018259	1018268	17.25	2.38	1.63	5.75	1.54	3.88	3.63	6.88	10.00	6.50	1.62	.25	.13
1-3/4	25	1018277	1018286	29.46	2.88	2.00	7.00	1.84	5.00	4.19	8.86	12.34	7.75	2.25	.25	.13
2	35	1018295	1018302	45.75	3.25	2.25	7.75	2.08	5.75	4.81	9.97	13.68	8.75	2.40	.25	.13

* NOTE: Maximum Proof Load is 2.0 times the Working Load Limit. Minimum Ultimate Strength is 6 times the Working Load Limit.

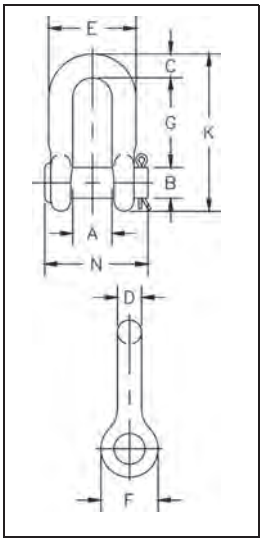

G-215 S-215

Nominal Size (in.)	Working Load Limit (t)*	Stock No. G-215	Stock No. S-215	Weight Each (lbs.)	Dimensions (in.) A	B	C	D	E	F	G	K	N	Tolerance +/- G	A
1/4	1/2	1018810	1018829	.10	.47	.31	.25	.25	.97	.62	.91	1.59	1.34	.06	.06
5/16	3/4	1018838	1018847	.18	.53	.38	.31	.31	1.15	.75	1.07	1.91	1.63	.06	.06
3/8	1	1018856	1018865	.25	.66	.44	.38	.38	1.42	.92	1.28	2.31	1.86	.13	.06
7/16	1-1/2	1018874	1018883	.40	.75	.50	.44	.44	1.63	1.06	1.48	2.67	2.13	.13	.06
1/2	2	1018892	1018909	.50	.81	.63	.50	.50	1.81	1.18	1.66	3.03	2.38	.13	.06
5/8	3-1/4	1018918	1018927	1.21	1.06	.75	.63	.63	2.32	1.50	2.04	3.76	2.91	.13	.06
3/4	4-3/4	1018936	1018945	2.00	1.25	.88	.81	.75	2.75	1.81	2.40	4.53	3.44	.25	.06
7/8	6-1/2	1018954	1018963	3.28	1.44	1.00	.97	.88	3.20	2.10	2.86	5.33	3.81	.25	.06
1	8-1/2	1018972	1018981	4.75	1.69	1.13	1.00	1.00	3.69	2.38	3.24	5.94	4.53	.25	.06
1-1/8	9-1/2	1018990	1019007	6.30	1.81	1.25	1.25	1.13	4.07	2.68	3.61	6.78	5.13	.25	.06
1-1/4	12	1019016	1019025	9.00	2.03	1.38	1.38	1.25	4.53	3.00	3.97	7.50	5.50	.25	.13
1-3/8	13-1/2	1019034	1019043	12.00	2.25	1.50	1.50	1.38	5.01	3.31	4.43	8.28	6.13	.25	.13
1-1/2	17	1019052	1019061	16.15	2.38	1.63	1.62	1.50	5.38	3.62	4.87	9.05	6.50	.25	.13
1-3/4	25	1019070	1019089	29.96	2.88	2.00	2.12	1.75	6.38	4.19	5.82	10.97	7.75	.25	.13
2	35	1019098	1019105	43.25	3.25	2.25	2.36	2.10	7.25	5.00	6.82	12.74	8.75	.25	.13

* NOTE: Maximum Proof Load is 2.0 times the Working Load Limit. Minimum Ultimate Strength is 6 times the Working Load Limit.

Copyright © 2008 The Crosby Group, Inc.
All Rights Reserved

Crosby® Eye Hooks

Load Rated Fatigue Rated "QT" QUENCHED & TEMPERED QUIC-CHECK® "TA" TYPE APPROVED

SEE APPLICATION AND WARNING INFORMATION

Para Español: www.thecrosbygroup.com

On Pages 140-141

S-320 & S-320N EYE HOOKS

All Crosby 320 Eye Hoist Hooks incorporate the following features:

- The most complete line of Eye hoist hooks.
- Available in carbon steel and alloy steel.
- Designed with a 5:1 Design Factor for (Carbon Steel); 4.5:1 Design Factor for 30t - 60t (Alloy Steel).
- Eye hooks are load rated.
- Proper design, careful forging and precision controlled quenched and tempering give maximum strength without excessive weight and bulk.
- Every Crosby Eye Hook has a pre-drilled cam which can be equipped with a latch. Even years after purchase of the original hook, latch assemblies can be added. (See pages 119 - 121)
- Chemical analysis and tensile tests performed on each PIC to verify chemistry and mechanical properties.
- Type Approval and certification in accordance with ABS 2007 Steel Vessel Rules 1-1-17.7, and ABS Guide for Certification of Cranes.
- Hoist hooks incorporate two types of strategically placed markings forged into the product which address two (2) **QUIC-CHECK®** features:
  - Deformation Indicators and Angle Indicators (see following page for detailed definition).

The following additional features have been incorporated in the new Crosby S-320N Eye Hoist Hooks. (Sizes 3/4 metric ton Carbon through 22 metric ton Alloy.)

- Metric Rated at 5:1 Design Factor for (Carbon Steel); 5:1 Design Factor for 1t - 22t (Alloy Steel).
- Can be proof tested to 2 times the working Load Limit.
- Low profile hook tip.
- New integrated latch (S-4320) meets the World class standard for lifting.
  - Heavy duty stamped latch interlocks with the hook tip.
  - High cycle, long life spring.
  - When secured with proper cotter pin through the hole in the tip of hook, meets the intent of OSHA Rule 1926.1431(g) and 1926.1501(g) for personnel hoisting.
- Fatigue rated at 1-1/2 times the Working Load Limit at 20,000 cycles.

Use 1-ton rated (min.)

Working Load Limit (t)		Hook ID Code	Eye Hook Stock No.			Weight Each (kg.)	Replacement Latch Kits		
Carbon	Alloy		Carbon S-320C S-320CN S.C.	Carbon G-320CN Galv.	Alloy S-320A S-320AN S.C.		S-4320 Stock No.	PL Stock No.	SS-4055 Stock No.
.75	1.25	†D	1022200	1022208	1022375	.28	1096325	-	-
1	1.6	†F	1022211	1022219	1022386	.40	1096374	-	-
1.5	2.5	†G	1022222	1022230	1022397	.65	1096421	-	-
2	3.2	†H	1022233	1022241	1022406	.94	1096468	-	-
3.2	5.4	†I	1022244	1022249	1022419	1.95	1096515	1092000	-
5	8	†J	1022255	1022262	1022430	3.76	1096562	1092001	-
7.5	11.5	†K	1022264	1022274	1022441	6.80	1096609	1092002	-
10	16	†L	1022277	1022285	1022452	9.42	1096657	1092003	-
15	22	†N	1022288	1022296	1022465	17.9	1096704	1092004	-
20	31.5	O	1023289	-	1023546	27.2	-	1093716	1090161
25	37	P	1023305	-	1023564	47.6	-	1093717	1090189
30	45	S	1023323	-	1023582	67	-	1093718	1090189
40	60	T	1023341	-	1023608	103	-	1093719	1090205

*Eye Hooks (3/4 TC - 22TA), Proof load is 2 times Working Load Limit. Eye Hooks (20 TC - 60TA). All carbon hooks-average straightening load (ultimate load) is 5 times Working Load Limit. Alloy eye hooks 1 ton through 22 ton-average straightening load (ultimate load) is 5 times Working Load Limit. Alloy eye hooks 30 tons through 60 tons-average straightening load (ultimate load) is 4.5 times Working Load Limit.

† New 320N style hook.

Copyright © 2013 The Crosby Group LLC
All Rights Reserved

Grade 80 Alloy Chain

SPECTRUM 8® ALLOY CHAIN

- Alloy Steel.
- Heat Treated.
- Finish – Black rust preventative coating.
- Permanently embossed with CG (Crosby Group) and 8 (Grade).
- Proof Tested at 2 times the Working Load Limit with certification.

Minimum chain working load for Grade 80 is 7100 lb

Grade 80 Alloy Chain recommended for overhead lifting applications.

Chain Size (in.)	Spec. 8 Drum Stock No.	Feet Per Drum	Material Size (in.)	Working Load Limit (lbs.)*	Maximum Inside Length (in.)	Maximum Inside Width (in.)	Maximum Length 100 Links (in.)	Weight Per 100 Feet (lbs.)
9/32 (1/4)	273527	500	.276	3500	.87	.42	90	72
5/16	273536	500	.343	4500	1.01	.49	100	114
3/8	273545	500	.394	7100	1.23	.58	125	148
1/2	273554	300	.512	12000	1.57	.77	164	243
5/8	273563	200	.630	18100	1.93	.90	202	351
3/4	273572	100	.787	28300	2.42	1.14	252	584
7/8	273581	100	.866	34200	2.66	1.26	277	705
1	273590	75	1.024	47700	3.28	1.54	328	1041
1-1/4	273599	66	1.260	72300	4.03	1.89	403	1478

* Proof loaded at 2 times Working Load Limit. Ultimate Load is 4 times the Working Load Limit.

Crosby provides two methods of attaching Spectrum 8® chain to Crosby fittings.

A-1337
LOK-A-LOY®
Connecting Link
Refer to Page 202

S-1325
Grade 100
Coupler Lilnk
Refer to Page 211

Copyright © 2011 The Crosby Group LLC
All Rights Reserved

General Purpose Tarps

Main
Clearance Sales
Construction Equipment & Cab Enclosures
Custom Applications
Field Covers
General Purpose Tarps
School Applications
Military Installations
Pool Covers
Repair Work
Residential Products
Tents
Tent Accessories
Total Containment, Painting & Sand Blasting
Truck Tarpaulins
Truck Accessories
About Us
Contact Us

Teri Tarps, protecting the construction, agricultural, recreational, and transportation industries against the weather.

TERI GENERAL PURPOSE TARPS are rugged, water and mildew resistant canvas tarpaulins available in both regular and flame retardant materials.

TERI GENERAL PURPOSE TARPS, constructed from strong and flexible canvas, are completely dependable in any weather and for almost any purpose. They are available in many popular styles: OD, water and mildew resistant and OD Flame, water and mildew resistant, specially treated for applications requiring a flame retardant material.

Material

TERI OD: Rated 10 ounce canvas untreated; 18 ounce per sq. yd. treated. This Olive Drab canvas is the "old stand-by", proven in thousands of applications. Completely water and mildew-resistant.

TERI OD Flame: flame retardant, this material is very popular in the construction industry. 1 0 ounce canvas untreated; 18 ounce after treatment. Water and mildew resistant.

Assumed Tarp DL

Available

10 oz. per sq. yd.

12oz. per sq. yd.

14.90 oz. per sq. yd.

Stock Sizes

15'x20'

20'x20'

20'x30'

All sizes are cut sizes before finishing. A 15' x 20' tarp will measure 1 4'4" x 1 9'6" minimum. Tarps are constructed of 6' material; allow for extra seams (2" per seam) on larger tarps.

*Special sizes available in request.

CHAIN LINK FENCE MANUFACTURERS INSTITUTE PRODUCT MANUAL

Standard Guide for Metallic-Coated Steel Chain Link Fence & Fabric

1. Purpose

1.1 The purpose of this guide is to provide a nationally recognized standard of quality for metallic-coated steel chain link fence fabric and when combined with framework and accessory items, as listed in this publication, to provide a nationally recognized standard of quality for complete fence.

2. Scope

2.1 This guide gives the nomenclature, definition, and general requirements for metallic-coated steel chain link fence fabric and framework for industrial usage. See Section 5.8 for applicable documents.

2.2 The values stated in inch-pound units are to be regarded as the standard. The metric values given in parentheses are for information only.

3. Description of Terms

3.1 *Chain Link Fence Fabric*—A fencing material from steel wire helically wound and interwoven in such a manner as to provide a continuous mesh without knots or ties except in the form of knuckling or of twisting the ends of the wires to form the selvage of the fabric.

3.2 *Knuckling*—This term is used to describe the type of selvage obtained by interlocking adjacent pairs of wire ends and then bending the wire ends back into a closed loop.

3.3 *Twisting*—This term is used to describe the type of selvage obtained by twisting adjacent pairs of wire ends together in a closed helix of 1-1/2 machine turns, which is equivalent to three full twists, and cuffing the wire ends at a sharp angle to provide sharp points. The wire ends beyond the twist shall be at least 1/4 inch (6.4mm) long.

3.4 *Diamond Count*—A term used to designate the number of mesh openings in each height of fabric.

3.5 *Other Terminology*—See ASTM F552 for a listing of other terms specific to Chain Link Fence.

4. Requirements

4.1 *Materials*

4.1.1 *Base Metal*—The base metal of the fabric shall be a good commercial quality of steel wire of the gages specified in Table 1.

4.1.2 *Zinc Coating*—The zinc coating on the fabric may be ordered in two coating weight classes, as Class 1—the weight of zinc coating shall not be less than 1.20 oz./ft.^{2} (366 gm/m^2) of uncoated wire surface; or Class 2—the weight of zinc coating shall not be less than 2.0 oz./ft.^{2} (610 gm/m^2) of uncoated wire surface as determined from the average of results of two or more specimens, and not less than 1.8 oz./ft.^{2} (500 g/m^2) of uncoated wire surface for any individual specimen. Fabric galvanized after fabrication is normally not produced with a Class 2 coating on 11 ga.–0.120" (3.05mm)—or 11 1/2 ga.–0.113" (2.87mm) wire. The weight of the zinc coatings shall be determined in accordance with 5.5.2. The zinc used for the coating shall conform to the grades specified in ASTM Designation B6, Standard Specification for scab zinc.

4.1.3 *Aluminum Coating*—The wire shall be aluminum coated by the hot-dip process before weaving into the fabric. The weight of aluminum coating for 6 ga.–0.192" (4.88mm)—and9 ga–0.148" (3.76mm)—shall not be less than 0.40 oz./ft.^{2} (122 g/m^2) and for 11 ga.–0.120" (3.05mm)—shall not be less than 0.35 oz/ft.^{2} (107 g/m^2) of uncoated wire surface when tested in accordance with 5.5.3.

4.1.4 *Zinc*—5% aluminum mischmetal alloy coating—the metallic coating on the fabric may be ordered in two coating weight classes, as Class 1, the weight of metallic coating shall not be less than 0.60 oz./ft.^{2} (183 gm/m^2) or Class 2, the weight of metallic coating shall not be less than 1.00 oz./ft.^{2} (305 gm/m^2) of uncoated wire surface as determined from the average of results of two or more specimens, and not less than 0.90 oz./ft.^{2} (250 gm/m^2) of uncoated wire surface for any individual specimen. The weight of the metallic coatings shall be determined in accordance with 5.5.4. The zinc-5% aluminum mischmetal alloy used for the coating shall conform to the grades specified in ASTM designation B-750, Standard Specification for Zinc-5% Aluminum Mischmetal Alloy (UNSZ38510) in Ingot Form for Hot-Dip Coatings.

4.1.5 *Aluminum Alloy*—ASTM F1183—Chain link fabric woven from aluminum alloy, 9 ga.–0.148" (3.76mm)—or 6 ga.–0.192" (4.88mm) wire.

4.2 *Fabric Sizes*—The height, diamond count, size of mesh, and wire diameters of chain link fabric shall be as given in Table 1. The methods of measurement and tolerances are given in 4.2.1, 4.2.2. and 4.2.3.

4.2.1 *Height of Fabric*—The height of the fabric shall be the overall dimension from ends of twists or knuckles. The tolerance of the nominal height shall be plus or minus one inch (±25mm).

4.2.2 *Mesh Sizes*—The size of mesh shall conform to the requirements as shown in Table 1. The permissible variation from the specified size of mesh shall be ±1/8 in. (±3.2mm) for all mesh sizes over 1 in. (25mm) and ±1/16 in. (±1.6mm) for all mesh sizes 1 in. (25mm) and under.

4.2.3 *Wire Diameter*—The diameter of the coated wire shall be determined as the average of two readings measured to the nearest 0.001 inch (0.025mm) taken at right angles to each other on the straight portion of the parallel sides of the mesh. The tolerance in the diameter of the coated wire shall be plus or minus 0.005 inch (±0.13mm).

4.3 *Selvage*—Fabric with 2 inch (50mm) or 2 1/8 inch (54mm) mesh, in heights less than 72 inches (1830mm) shall be knuckled at both selvages. Fabric 72 inches (1830mm) high and over shall be knuckled at one selvage and twisted at the other. These are the standard selvages.

9-gauge chain link

Table 1—Fabric Size[A]

Recommended Usage	Height of Fabric	Size of Mesh	Gage,** Coated Wire	Nominal Diameter Coated Wire
Heavy Industrial	36" 42" 48" 60" 72" 84" 96" 120" 144" Diamond Count 10½ 12½ 13½ 17½ 20½ 24½ 27½ 34½ 41½	2" (50mm)	6	0.192" (4.88mm)
Standard Industrial Residential	36" 42" 48" 60" 72" 84" 96" 120" 144" Diamond Count 10½ 12½ 13½ 17½ 20½ 24½ 27½ 34½ 41½	2" (50mm)	9	0.148" (3.76mm)
Light Industrial Residential	36" 42" 48" 60" 72" 84" Diamond Count 10½ 12½ 14½ 17½ 20½ 24½	2" (50mm)	11	0.120" (3.05mm)
Heavy Industrial	36" 42" 48" 60" 72" 84" 96" 120" 144" Diamond Count 20 23 27 33 39 45 53 67 79	1" (25mm)	6	0.192" (4.88mm)
Standard Industrial Heavy Industrial	36" 42" 48" 60" 72" 84" 96" 120" 144" Diamond Count 20 23 27 33 39 45 53 67 79	1" (25mm)	9	0.148" (3.76mm)
Light Industrial Residential	36" 42" 48" 60" 72" 84" 96" 120" 144" Diamond Count 20 23 27 33 39 45 53 67 79	1" (25mm)	11	0.120" (3.05mm)
Light Residential	36" 42" 48" 60" 72" Diamond Count 9½ 11½ 13½ 16½ 19½	2⅛" (54mm)	11½	0.113" (2.87mm)
Tennis Court	Diamond Count 120 144" 39½ 47½	1¾" (44mm)	11	0.120" (3.05mm)
Security*	36" 42" 48" 60" 72" 84" 96" 120" 144" See Fig. 1 for mesh Dimensions	⅜", ½", ⅝" (10mm), (13mm), (16mm)	11	0.120" (3.05mm)

[A] See Table 5 for supplementary metric equivalent information
* Small mesh ⅜" (10mm), ½" (13mm), ⅝" (16mm) only available in aluminum coated.
** Aluminum alloy fabric available only in 9 ga. —0.148 (3.76mm) and 6 ga. —0.192 (4.88mm)

Table 2 – Breaking Strength of Coated Steel Wire

Diameter of Coated Wire Inches	(mm)	Minimum Breaking Strength Lbf	(N)
0.192	(4.88)	2170	(9650)
0.148	(3.76)	1290	(5740)
0.120	(3.05)	850	(3780)
0.113	(2.87)	750	(3340)

Table 3 – Breaking Strength of Aluminum Alloy Wire

Diameter of Wire Inches	(mm)	Minimum Breaking Strength Lbf	N
0.192	(4.88)	1560	(6939)
0.148	(3.76)	925	(4144)

Fig. 1 – Mesh Dimensions for 3/8 -in. (10mm), 1/2 -in. (13mm), and 5/8 -in. (16mm), Fabric

S	H	W
⅜ in. (10mm) MESH	¾ in. (19mm)	¾ in. (19mm)
½ in. (13mm) MESH	15/16 in. (24mm)	15/16 in. (24mm)
⅝ in. (16mm) MESH	1⅛ in. (29mm)	1⅛ in. (29mm)

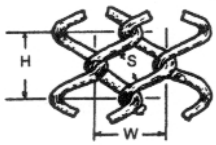

D21

Appendix E
Standard Wire Rope

A2B ENGINEERING, LLC
CONSULTING ENGINEERS

6x19 Class Wire Rope

Strands: 6
Wires per strand: 19 to 26
Core: IWRC or fiber core
Standard Grade: Purple Plus
Lay: Regular or Lang
Finish: Bright or galvanized

The 6x19 Classification of wire rope is the most widely used. With its good combination of flexibility and wear resistance, rope in this class can be suited to the specific needs of diverse kinds of machinery and equipment.

The 6x19 Seale construction, with its large outer wires, provides great ruggedness and resistance to abrasion and crushing. However, its resistance to fatigue is somewhat less than that offered by a 6x25 construction. The 6x25 possesses the best combination of flexibility and wear resistance in the 6x19 Class due to the filler wires providing support and imparting stability to the strand. The 6x26 Warrington Seale construction has a high resistance to crushing. This construction is a good choice where the end user needs the wear resistance of a 6x19 Class Rope and the flexibility midway between a 6x19 Class and 6x37 Class rope.

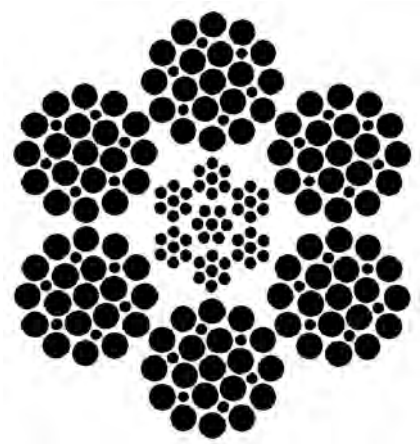

6x25 Filler Wire with IWRC

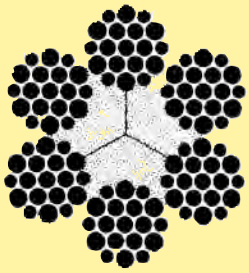

6x19 Warrington with fiber core

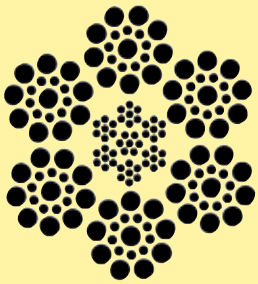

6x19 Seale with IWRC

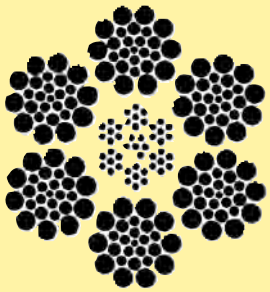

6x26 Warrington Seale with IWRC

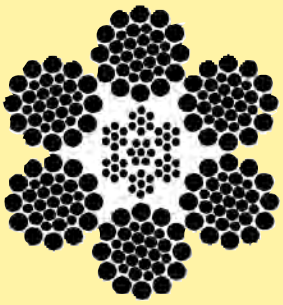

6x31 Warrington Seale with IWRC

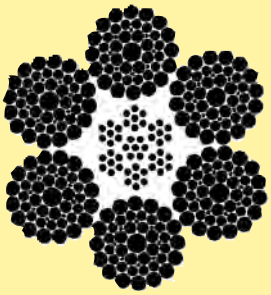

6x49 Filler Wire Seale with IWRC

6x36 Class Wire Rope

Strands: 6
Wires per strand: 27 to 49
Core: IWRC or fiber core
Standard Grade: Purple Plus
Lay: Regular or Lang
Finish: Bright or galvanized

The 6x36 Class of wire rope is characterized by the relatively large number of wires used in each strand. Ropes of this class are among the most flexible available due to the greater number of wires per strand, however their resistance to abrasion is less than ropes in the 6x19 Class.

The designation 6x36 is only nominal, as in the case with the 6x19 Class. Improvements in wire rope design, as well as changing machine designs, have resulted in the use of strands with widely varying numbers of wires and a smaller number of available constructions. Typical 6x37 Class constructions include 6x33 for diameters under 1/2", 6x36 Warrington Seale (the most common 6x37 Class construction) offered in diameters 1/2" through 1-5/8", and 6x49 Filler Wire Seale over 1-3/4" diameter.

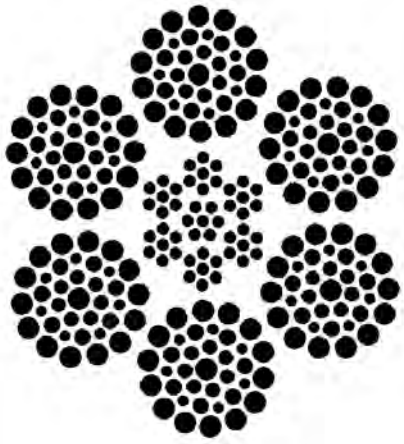

6x36 Warrington Seale IWRC

6x19 and 6x36 Classes Technical Data

6x19 Class

6x19 Seale
6x19 Warrington
6x21 Filler Wire Type U
6x21 Seale
6x25 Filler Wire Type W
6x25 Seale
6x26 Warrington Seale

Rope Diameter		Approx. Weight (lb./ft.)		Nominal Strength, tons (bright or drawn galvanized**)		
				Royal Purple	Purple Plus	
Inches	mm.	Fiber Core	IWRC	IWRC	Fiber Core	IWRC
1/4	6.5	0.11	0.12	3.74	3.01	3.40
5/16	8.0	0.16	0.18	5.80	4.69	5.27
3/8	9.5	0.24	0.26	8.30	6.71	7.55
7/16	11.0	0.32	0.35	11.2	9.10	10.2
1/2	13.0	0.42	0.46	14.6	11.8	13.3
9/16	14.5	0.53	0.58	18.5	14.9	16.8
5/8	16.0	0.66	0.72	22.7	18.4	20.6
3/4	19.0	0.95	1.04	32.4	26.2	29.4
7/8	22.0	1.29	1.41	43.8	35.4	39.8
1	26.0	1.68	1.85	56.9	46.0	51.7
1-1/8	29.0	2.13	2.34	71.5	57.9	65.0
1-1/4	32.0	2.63	2.89	87.9	71.1	79.9
1-3/8	35.0	3.18	3.49	106	85.5	96
1-1/2	38.0	3.78	4.16	125	101	114
1-5/8	42.0	4.44	4.88	146	118	132
1-3/4	45.0	5.15	5.66	169	136	153
1-7/8	48.0	5.91	6.49	192	155	174
2	52.0	6.73	7.39	217	176	198
2-1/8	54.0	7.60	8.34	243	197	221
2-1/4	58.0	8.52	9.35	272	220	247
2-3/8	60.0	9.49	10.4	301	244	274
2-1/2	64.0	10.5	11.6	332	269	302
2-3/4	70.0	12.7	14.0	397	321	361

**Galvanizing: For Class A galvanized wire rope (EIP grade only), deduct 10% from the nominal strength shown.

Technical data for the above listed constructions are the same and are detailed in the table. For further information on additional constructions and diameters, contact WW's customer service department.

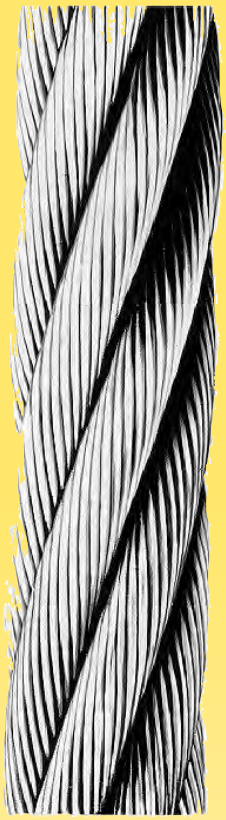

6x36 Class

6x31 Warrington Seale
6x33
6x36 Warrington Seale
6x41 Warrington Seale
6x43 Filler Wire Seale
6x49 Filler Wire Seale

Appendix F
Scaffold Platform

A2B ENGINEERING, LLC
CONSULTING ENGINEERS

BETH-ALLEN LADDER & EQUIPMENT Inc.

2124 West Broad Street Bethlehem, Pennsylvania 18018

1-800-835-4242 Email Us **610-866-4242**
FAX: 610-866-3328

WERNER

Aluminum Staging
Task-Master® Stages

Ideal for the Jack applications, Swing stages, or catwalks

Decorator Planks * Scaffold Planks * Stage Platforms * Guard Rail Systems

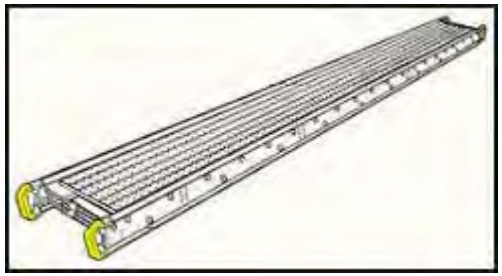

- Twist-Proof® Stage Design
- Individual slip-resistant decking minimizes paint or material build up.
- Double end rung provides extra rigidity on stages 20' or longer-standard on stages with 5" or 6" rails.
- Vinyl-coated end caps serve as hand grips and protect from sharp edges and surfaces marks.

DECORATOR PLANKS **1 Person 250 lbs. Rated**

Model	Width	Side Rail Length	Side Rail Depth	Side Rail Flange	Ship Wt. lbs.
2008	12"	8'	4"	1-3/8"	25
2012	12"	12'	4"	1-3/8"	36
2016	12"	16'	4"	1-3/8"	48
2020	12"	20'	5"	1-3/8"	65
2024	12"	24'	5"	1-3/8"	78

SCAFFOLD PLANKS **2 Person - 500Lbs. Rated**

Model	Width	Side Rail Length	Side Rail Depth	Side Rail Flange	Ship Wt. lbs.
2316	12"	16'	4"	1-3/8"	48
2320	12"	20'	6"	1-3/8"	79
2324	12"	24'	6" HvyDty	1-3/8"	112
2328	12"	28'	6" HvyDty	1-3/8"	131
2330	12"	30'	6" HvyDty	1-3/8"	140
2332	12"	32'	6" HvyDty	1-3/8"	149
2408	14"	8'	4"	1-3/8"	27
2412	14"	12'	4"	1-3/8"	40
2416	14"	16'	5"	1-3/8"	58
2420	14"	20'	6"	1-3/8"	85
2424	14"	24'	6"	1-3/8"	109
2428	14"	28'	6"	2"	127
2430	14"	30'	6" HvyDty	2"	171
2432	14"	32'	6" HvyDty	2"	182

STAGE PLATFORMS **2 Persons - 500 Lbs. Rated**

Model	Width	Side Rail length	Side Rail Depth	Side Rail flange	Ship Wt. lbs.
2508	20"	8'	4"	1-3/8"	33.0
2512	20"	12'	4"	1-3/8"	48.0
2516	20"	16'	5"	1-3/8"	70.0
*2520	20"	20'	6"	1-3/8"	102.0
*2524	20"	24'	6"	1-3/8"	121.0
*2528	20"	28'	6"	2"	157.0
*2530	20"	30'	6"	2"	168.0
*2532	20"	32'	6"	2"	179.0
*2536	20"	36'	6"Hvy Dty	2"	243.0

*2539	20"	39'	6" Hvy Dty	2"	264.0

STAGE PLATFORMS **2 Persons - 500 Lbs. Rated**

2608	24"	8'	4"	1-3/8"	38.0
2612	24"	12'	4"	1-3/8"	56.0
2616	24"	16'	5"	1-3/8"	81.0
*2620	24"	20'	6"	1-3/8"	115.0
*2624	24"	24'	6"	1-3/8"	138.0
*2628	24"	28'	6"	2"	168.0
*2630	24"	30'	6"	2"	180.0
*2632	24"	32'	6"	2"	191.0
2708	28"	8'	4"	1-3/8"	41.0
2712	28"	12'	4"	1-3/8"	60.0
2716	28"	16'	5"	1-3/8"	87.0
*2720	28"	20'	6"	1-3/8"	124.0
*2724	28"	24'	6"	1-3/8"	147.0
*2728	28"	28'	6"	2"	187.0
*2732	28"	32'	6"	2"	213.0

STAGE PLATFORMS **3 Person - 750 lbs. Rated**

3112	24"	12'	4"	2"	64.0
3116	24"	16'	5"	2"	92.0
*3120	24"	20'	6"	2"	115.0
*3124	24"	24'	6"Hvy Dty	2"	145.0
*3128	24"	28'	6"Hvy Dty	2"	204.0
*3132	24"	32'	6" Hvy Dty	2"	236.0
*3136	24"	36'	6" Hvy Dty	2"	323.0
*3139	24"	39'	6" Hvy Dty	2"	365.0

STAGE PLATFORMS **3 Person - 750 lbs. Rated**

3208	28"	8'	4"	2"	48.0

Appendix G
Ventilation System

A2B ENGINEERING, LLC
CONSULTING ENGINEERS

A2B ENGINEERING, LLC CONSULTING ENGINEERS	Subject: Abrasive Blasting Containment Plans Bennington and Rutland County, Vermont; 5 Bridges on or over US Route 7		
	Comp by: MAT Check by: PRS	Date: 11/09/15 Job No: 187-17-1	Sheet Number:

Dust Collector/Fan Ventilation System :

The contractor shall provide mechanical exhaust ventilation for the abrasive blasting containment structures using one or more mobile dust collectors. The contractor proposes to use one (1) 45,000 cfm at 13" W.G. mobile dust collector manufactured by Advanced Recycling Sytems, Inc. The dust collector has an assumed dust exhaust capacity based on the number of ducts provided.

Using an itterative process and estimated friction loss for 20" diameter ducts from friction loss curves, use:

4 - 20 inch diameter ducts

Max. Exhaust capacity =	48000	cfm total,	or 12000	cfm per duct
Total Estimated system static pressure =	9.46	inch water gage (from fan curve)		
Friction loss per 100 ft of duct =	2.0	Inch W.G. (from friction loss curve for 20" ducts)		
Maximum number of elbows =	3	Each (46 equivalent linear feet per elbow)		
loss thru containment =	1.20	inch water gage (typical)		
loss thru fabric filters =	4.00	inch water gage (typical)		
loss thru elbows =	2.76	inch water gage (calculated)		
loss thru duct =	1.50	inch water gage (remaining)		
Maximum Length of Duct =	75.0	ft (max allowed for system)		

3 - 20 inch diameter ducts

Max. Exhaust capacity =	45000	cfm total,	or 15000	cfm per duct
Total Estimated system static pressure =	12.25	inch water gage (from fan curve)		
Friction loss per 100 ft of duct =	2.8	Inch W.G. (from friction loss curve for 20" ducts)		
Maximum number of elbows =	3	Each (46 equivalent linear feet per elbow)		
loss thru containment =	1.20	inch water gage (typical)		
loss thru fabric filters =	4.00	inch water gage (typical)		
loss thru elbows =	3.86	inch water gage (calculated)		
loss thru duct =	3.19	inch water gage (remaining)		
Maximum Length of Duct =	113.8	ft (max allowed for system)		

2 - 20 inch diameter ducts

Max. Exhaust capacity =	40000	cfm total,	or 20000	cfm per duct
Total Estimated system static pressure =	16.00	inch water gage (from fan curve)		
Friction loss per 100 ft of duct =	4.5	Inch W.G. (from friction loss curve for 20" ducts)		
Maximum number of elbows =	3	Each (46 equivalent linear feet per elbow)		
loss thru containment =	1.20	inch water gage (typical)		
loss thru fabric filters =	4.00	inch water gage (typical)		
loss thru elbows =	6.21	inch water gage (calculated)		
loss thru duct =	4.59	inch water gage (remaining)		
Maximum Length of Duct =	102.0	ft (max allowed for system)		

1 - 20 inch diameter ducts

Max. Exhaust capacity =	24000	cfm total,	or 24000	cfm per duct
Total Estimated system static pressure =	17.50	inch water gage (from fan curve)		
Friction loss per 100 ft of duct =	5.5	Inch W.G. (from friction loss curve for 20" ducts)		
Maximum number of elbows =	3	Each (46 equivalent linear feet per elbow)		
loss thru containment =	1.20	inch water gage (typical)		
loss thru fabric filters =	4.00	inch water gage (typical)		
loss thru elbows =	7.59	inch water gage (calculated)		
loss thru duct =	4.71	inch water gage (remaining)		
Maximum Length of Duct =	85.6	ft (max allowed for system)		

If the cross sectional area is exceeded in the shop drawings or required air flow is not achieved, contractor shall provide additional dust collectors and exhaust ducts or reduce the size of the active paint containment enclosure by installing internal tarpaulin walls.

A2B ENGINEERING, LLC CONSULTING ENGINEERS	Subject: Abrasive Blasting Containment Plans Bennington and Rutland County, Vermont; 5 Bridges on or over US Route 7		
	Comp by: MAT Check by: PRS	Date: 11/09/15 Job No: 187-17-1	Sheet Number:

Containment Design Parameters:

Provide a minimum cross-draft ventilation of 100 - 300 ft/min (Coating Structural Steel- Containment System 561.10-3)
Provide a minimum down-draft ventilation of 60 ft/min
Size the inlets to provide air flow velocity of 700 - 1,000 ft/min

Ventilation System Cross-Draft:

20" diam. Ducts, No. Required =	4	3	2	1	
Volume Q =	48,000	45,000	24,000	20,000	cfm
Max. Containment Area (V = 100 ft/min)	480.0	450.0	240.0	200.0	ft^2
Min. Containment Area (V = 300 ft/min)	160.0	150.0	80.0	66.7	ft^2
Max. Inlet Area (V = 700 ft/min)	68.6	64.3	34.3	28.6	ft^2
Min. Inlet Area (V = 1000 ft/min)	48.0	45.0	24.0	20.0	ft^2

Sample Calculation:

Max. Containment Area = Q/V = 48000 cfm / 100 ft/min = 480.0 ft^2

Min. Containment Area = Q/V = 48000 cfm / 300 ft/min = 160.0 ft^2

Max. Inlet Area = Q/V = 48000 cfm / 700 ft/min = 68.6 ft^2

Min. Inlet Area = Q/V = 48000 cfm / 1000 ft/min = 48.0 ft^2

ADVANCED RECYCLE SYSTEMS, INC.
MODEL ARS-45 MOBILE DUST COLLECTOR

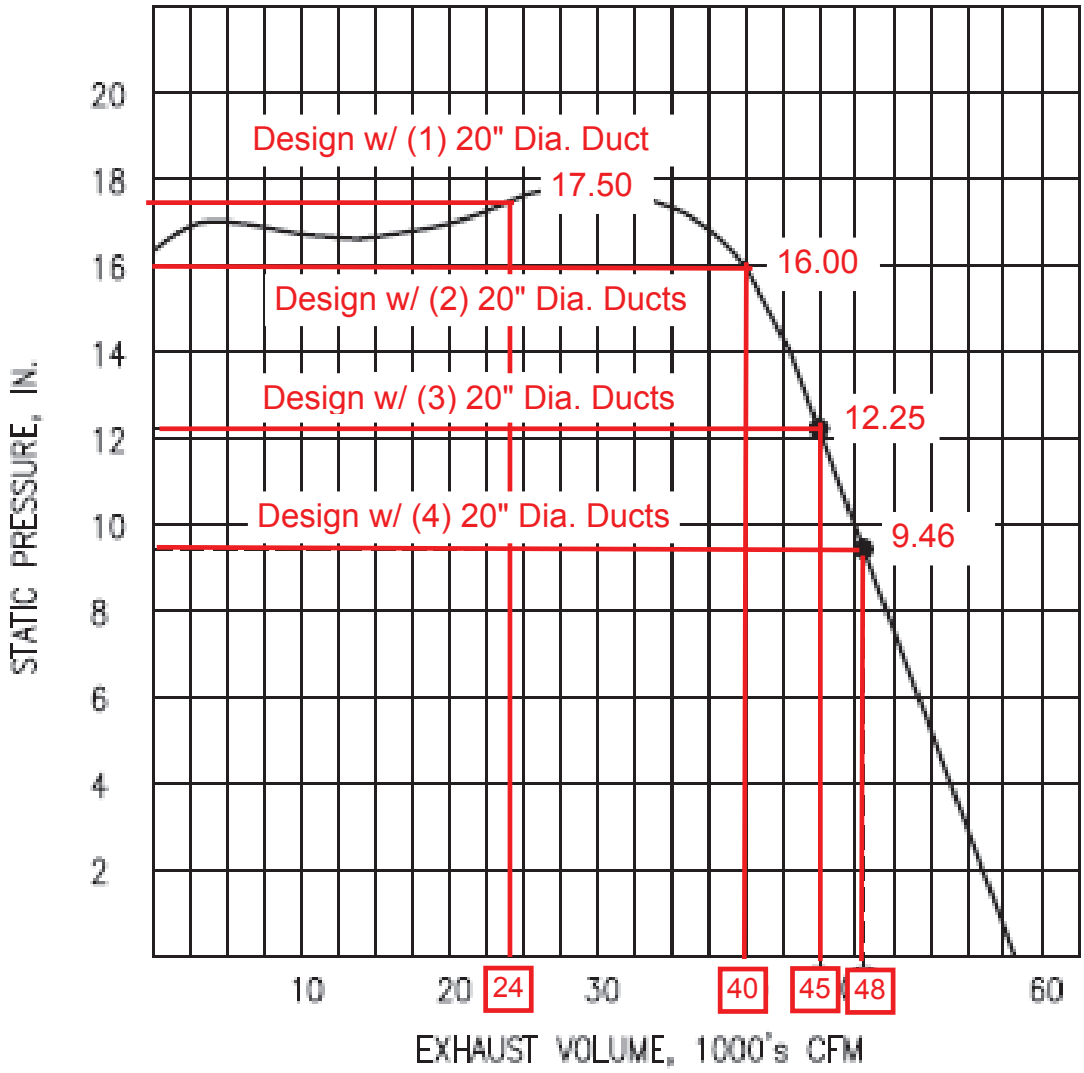

DUST COLLECTOR FAN CURVE

MAX. AVAILABLE EXHAUST CAPACITY W/4 DUCTS	48,000 CFM
MAX. AVAILABLE EXHAUST CAPACITY W/3 DUCTS	45,000 CFM
MAX. AVAILABLE EXHAUST CAPACITY W/2 DUCTS	40,000 CFM
MAX. AVAILABLE EXHAUST CAPACITY W/1 DUCT	24,000 CFM

Estimated Friction Loss for 20" diameter exhaust ducts

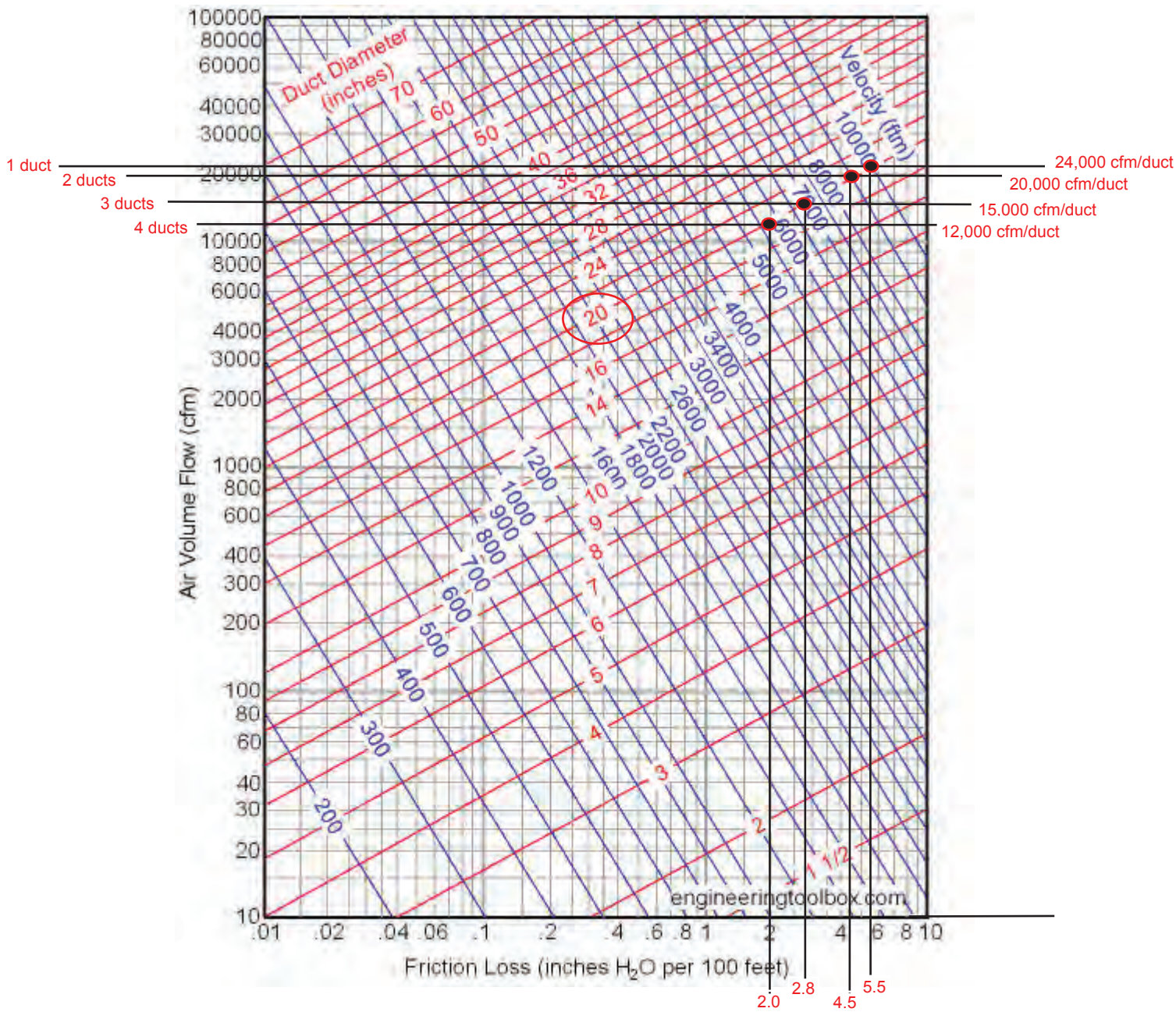

Advanced Recycling Systems, Inc.

Designers and Builders of Mobile Blasting Systems

1089 N. HUBBARD ROAD • LOWELLVILLE, OHIO 44436-9737 • Tel. (330) 534-3330 • FAX (330) 534-9249

45,000 CFM Dust Collector at 13" Wg.

- ***Hydraulic Auger***
- ***Only 28 ft. long***
- ***Long Life Filter Cartridges***

Low Drag-High Airflow Design

Advanced Recycling Systems, Inc.

Designers and Builders of Mobile Blasting Systems

1089 N. HUBBARD ROAD • LOWELLVILLE, OHIO 44436-9737 • Tel. (330) 534-3330 • FAX (330) 534-9249

45,000 CFM Dust Collector

SPECIFICATIONS	
AIR RATE PER UNIT	45,000 CFM @ 13 Wg. 40,000 CFM @ 16 Wg.
CARTRIDGE EFFICIENCY	99.9% @ 0.5 microns
ARRANGEMENT OF ELEMENTS	Vertical
CARTRIDGE CLEANING	Ram Injection, Pulse Type
NUMBER OF CARTRIDGES	84
FILTER MEDIA AREA	12,600 sq. ft.
AIR-TO-CLOTH RATIO	3.5 TO 1 @ 45,000 CFM 3.1 TO 1 @ 40,000 CFM
DUCTING CONNECTIONS	4 @ 20" Dia.
FAN	Class IV Non-overloading Type "C" Spark Resistant
DRIVE	Banded V-Belt with clutch
TYPE OF ENGINE	165 H.P. Diesel
FUEL TANK	90 Gallon
AUGER DRIVE	Hydraulic
TRAILER	28'L x 8"W x 12'3"H
BRAKES	Electric
OPTIONS:	Dual Rear Inlets

Specifications are subject to change without notice so that improvements can be affected as quickly as possible.

Nothing contained in this brochure is intended to extend any warranty or representation, expressed or implied, regarding the products described herein.

COATING EXISTING STRUCTURAL STEEL – CONTAINMENT SYSTEM. (REV 11-16-11)

SUBARTICLE 561-10.3 (of the Supplemental Specifications) is deleted and the following substituted:

561-10.3 Containment System: Submit a written containment system design plan in accordance with this section and the contract documents at the pre-construction conference or as directed by the Engineer which clearly describes the proposed containment system applicable to the intended removal method and in accordance with the requirements outlined herein and SSPC Guide 6, Guide for Containing Debris Generated During Paint Removal Activities. Ensure the plan includes, but is not limited to, removal method; methods for collecting debris; and containment enclosure components. Use fire retardant materials. Provide containment drawings, calculations, assumptions, ventilation criteria if applicable, and a structural analysis that verifies the existing structure can withstand the additional dead, live and wind loads imposed by the containment system, signed and sealed by a Specialty Engineer. However, for more complex structures incorporating cables stayed, suspension, or truss designs, the analysis must be performed by the Contractor's Engineer of Record qualified in Type Work Category 4.3, Complex Bridge Design. Provide a contingency plan addressing natural weather events such as tropical storms and hurricanes. Ensure the lighting inside the containment is in accordance with SSPC Guide 12, Guide for Illumination of Industrial Painting Projects. Provide lighting to a minimum intensity of 10 ft-cd for general, 20 ft-cd for work, and 50 ft-cd for inspection. All drawings and calculations must be submitted and accepted before any work begins. Include a clear description of the ventilation system components and information including the fan curve and design point on the proposed dust collector. Design to provide ventilation according to the notes provided in SSPC Guide 6: 100 feet per minute for cross draft and 50-60 feet per minute for downdraft.

Isolate the immediate area of the structure to ensure compliance with current and permit requirements for air, water, soil, and pollution prevention. Protect the containment system from vehicular and pedestrian traffic. Ensure paint, paint chips, or other debris will not fall outside of the containment area under any circumstances. Repair any damage created by fastening, bracing, or handling the scaffolding and staging. If a suspended platform is constructed, use rigid or flexible materials as needed to create an air and dust impenetrable enclosure. Verify that the platform and its components are designed and constructed to support at least four times its maximum intended load without failure, with wire cables capable of supporting at least six times their maximum intended load without failure. Strictly comply with all applicable OSHA regulations regarding scaffolding. The category and class of containment shall be as required in the Contract Documents.