MONOKO, LLC

1037 Peninsula Avenue
Tarpon Springs, FL 34689-2125
E-mail Address: MonokoLLC@aol.com
(727) 940-3244
(727) 279-8795 Fax

Submittal No.: 04c: Containment Plans Rev 2, Pages C8A &C11A

Date: May 6, 2016

Vermont Department of Transportation
Southwest Regional Construction Office
Attn: Mr. Mark H. Mackintosh, P.E., Regional Construction Engineer
61 Valley View
Mendon, VT 05701
(Phone) (802) 773-1384; (Fax) (802) 786-5894
Mark.Mackintosh@Vermont.gov

Description: Proposal/Contract Number: Bennington-Mt Tabor BF BPNT (16)
Letting Date: 06/05/15; Award Date: 07/01/15
Project Description: Bridge Painting of Five Bridges
In the Towns of Bennington & Mt. Tabor, VT
Contract Amount: $2,122,323.00; Completion Date: 09/02/16

Contractor: **MONOKO, LLC**
Reviewed & Approved By: Keri Monokandilos
Keri Monokandilos, Manager
Date: **05/06/2016**

Engineer: Tim Pockette, P.E., Resident Engineer
61 Valley View
Mendon, VT 05701
802-773-1384
802-793-4027 cell
Tim.Pockette@vermont.gov

Revision:
We have added the use of fence platform in conjunction with the corrugated platform for bridges 15 and 16N & S. These pages are shown on C8A & C11A. Note that only corrugated platform will be used over live lanes.

INDEX OF SHEETS:

C-1 TITLE SHEET
C-2 GENERAL NOTES (1 OF 2)
C-3 GENERAL NOTES (2 OF 2)
- BRIDGE NO. 11 (BENNINGTON COUNTY) US ROUTE 7 OVER ROARING BRANCH
C-4 PLAN & ELEVATION
C-5 CONTAINMENT SECTION DETAILS
- BRIDGE NO. D15 (BENNINGTON COUNTY) TH NO. 14 OVER US ROUTE 7
C-6 PLAN & ELEVATION
C-7 CONTAINMENT SECTION DETAILS (1 OF 3)
C-8 CONTAINMENT SECTION DETAILS (2 OF 3)
C-8A CONTAINMENT SECTION DETAILS (3 OF 3)
- BRIDGE NO. 16N (BENNINGTON COUNTY) US ROUTE 7 OVER BENN SH N
- BRIDGE NO. 16S (BENNINGTON COUNTY) US ROUTE 7 OVER BENN SH N
C-9 PLAN & ELEVATION
C-10 CONTAINMENT SECTION DETAILS (1 OF 3)
C-11 CONTAINMENT SECTION DETAILS (2 OF 3)
C-11A CONTAINMENT SECTION DETAILS (3 OF 3)
- BRIDGE NO. 56C (RUTLAND COUNTY) US ROUTE 7 OVER MILL BROOK
C-12 PLAN & ELEVATION
C-13 CONTAINMENT SECTION DETAILS
C-14 CONTAINMENT MISCELLANEOUS DETAILS (1 OF 4)
C-15 CONTAINMENT MISCELLANEOUS DETAILS (2 OF 4)
C-16 CONTAINMENT MISCELLANEOUS DETAILS (3 OF 4)
C-17 CONTAINMENT MISCELLANEOUS DETAILS (4 OF 4)

VERMONT
DEPARTMENT OF TRANSPORTATION

PROJECT NO. BF BPNT (16)
FIVE BRIDGES ON OR OVER US ROUTE 7
BRIDGE NOS. 11, D15, 16N, 16S, 56C
BENNINGTON AND RUTLAND COUNTY, VERMONT

ABRASIVE BLASTING CONTAINMENT PLANS, REV. 3

PREPARED FOR:

MONOKO, LLC.
1037 PENINSULA AVENUE
TARPON SPRINGS, FL 34689
PHONE (727) 940-324
FAX (727) 279-8795

PREPARED BY:

A2B ENGINEERING, LLC.
5406 N. HOOVER BLVD., SUITE 12
TAMPA, FL 33634
PHONE (813) 249-2220
FAX (813) 793-4692
ENGINEER OF RECORD, PAUL R. STEIJLEN, PE
VERMONT P.E. LICENSE NUMBER 107795

SHEET NO.
C-1

SPECIFICATIONS:

VERMONT AGENCY OF TRANSPORTATION (VTRANS) STANDARD SPECIFICATIONS FOR ROAD AND BRIDGE CONSTRUCTION, 2014 EDITION, AND SUPPLEMENTS THERETO.

DESIGN CRITERIA:

DEAD LOAD (PLATFORM):	3 PSF
DEAD LOAD (SCAFFOLD):	220 LBS. (32'x28" MAX. 500 LBS. RATED)
LIVE LOAD (UNIFORM PLATFORM):	12 PSF (WEIGHT OF ½" STEEL SHOT)
LIVE LOAD (UNIFORM SCAFFOLD):	6 PSF (WEIGHT OF ¼" STEEL SHOT)
LIVE LOAD (CONCENTRATED):	500 LBS. (TWO WORKERS MAX.)

MATERIAL PROPERTIES:

STRUCTURAL SHAPES, PLATES & BARS:	ASTM A36, Fy = 36,000 PSI
STRUCTURAL TUBING:	ASTM A500, GRADE B, Fy = 46,000 PSI
STRUCTURAL BOLTS:	ASTM A325
TIMBER:	SOUTHERN PINE NO. 2 (OR BETTER)
CABLES:	6x19 IWRC EIP
CHAIN LINK:	9-GAUGE GALVANIZED
METAL DECKING:	ASTM A611 OR A653, Fy = 33,000 PSI

ALL BOLTS SHALL BE ANCHOR BOLTS: RED HEAD TRUBOLT WEDGE TYPE ANCHORS OR EQUIVALENT.

REQUIRED PLATFORM CABLE SIZES
(⅜" Ø MIN. SUPPORT HANGER SPACING = 25'-0" MAX.)

OPTION #	PLATFORM CABLE	PLATFORM CABLE SPACING
1	½" Ø	3'-9" (MAX.)
2	9/16" Ø	5'-3" (MAX.)

USE ½" Ø MIN. SCAFFOLD CABLE WITH ⅜" Ø MIN. SUPPORT HANGERS SPACED AT 25'-0" MAXIMUM.

NO MORE THAN 2 WORKERS SHALL BE ALLOWED PER PLATFORM CABLE OR SCAFFOLD CABLE. LIMIT 500 LB TOTAL WEIGHT OF WORKERS AND ABRASIVE BLASTING ON 500 LB RATED SCAFFOLD.

STRUCTURAL IMPACT:

THE PLATFORM CONTAINMENT STRUCTURE HAS BEEN ANALYZED FOR AN AVERAGE LIVE LOAD ALLOWANCE OF 16 PSF (APPROXIMATELY ½" AVERAGE DEPTH OF STEEL SHOT, 1.5" MINERAL SLAG ABRASIVE OR 1.5" SAND ABRASIVE, PLUS THE UNIFORM WORKER LOADING) WITH MAXIMUM OF 1" DEPTH OF STEEL SHOT (3" MINERAL SLAG ABRASIVE OR 3" SAND ABRASIVE) FOR THE CHAIN LINK. WHEN THE DEPTH OF SPENT ABRASIVES NEARS THE DEPTHS SPECIFIED, THE CONTRACTOR WILL CEASE ABRASIVE BLASTING OPERATIONS AND VACUUM THE SPENT ABRASIVES.

DEAD, LIVE AND WIND LOADS IMPOSED ON THE BRIDGE DUE TO INSTALLATION OF THE PROPOSED PLATFORM & CONTAINMENT SYSTEMS WILL HAVE NO ADVERSE EFFECT ON THE BRIDGE STRUCTURE, AS DEFINED IN (A) AASHTO STANDARDS SPECIFICATIONS FOR HIGHWAY BRIDGES (SIXTEENTH EDITION), FIGURE 3.7.6B AND (B) AASHTO MANUAL FOR CONDITION EVALUATION OF BRIDGES (SECOND EDITION), CHAPTER 6.6. THE BRIDGE HAS NOT BEEN ANALYZED FOR LOADS IMPOSED BY THE GRIT RECYCLING MACHINE (IF APPLICABLE). AS A RESULT, THE CONTRACTOR SHALL OBTAIN APPROVAL FROM THE OWNER FOR PLACEMENT OF ALL EQUIPMENT ALONG THE BRIDGE.

THE CONTAINMENT STRUCTURE HAS BEEN ANALYZED FOR A MAXIMUM WIND VELOCITY OF 40 MPH. IF WINDS NEARING OR EXCEEDING 40 MPH (OR A LESSER WIND IS SPECIFIED IN THE CONTRACT SPECIFICATIONS) ARE PREDICTED, BLASTING AND PAINTING OPERATIONS SHALL CEASE, THE CONTRACTOR SHALL THOROUGHLY COLLECT AND REMOVE ALL SPENT ABRASIVE MATERIAL AND DEBRIS GENERATED FROM THE BLASTING AND PAINTING ACTIVITIES USING A VACUUM TRUCK AND/OR PUMP, AND THE PAINT CONTAINMENT TARPAULINS SHALL BE ROLLED AND SECURED IN PLACE.

BASED ON THE MAXIMUM WIND VELOCITY OF 40 MPH (8 PSF WIND LOAD PER AASHTO), THE RESULTING LOAD TRANSFERRED TO A BRIDGE STRUCTURE IS 175 PLF, BASED ON A CONTAINMENT HEIGHT OF 50'-0". SINCE AASHTO SPECIFIES A LATERAL LOADING OF 300 PLF FOR DESIGN OF GIRDER BRIDGES, THE MAXIMUM ANTICIPATED WIND LOAD OF 175 PLF IS ACCEPTABLE. WIND LOADING ON GIRDER BRIDGES DOES NOT GOVERN.

FOR PROJECTS INVOLVING THE INSTALLATION OF SUSPENDED PLATFORM, AASHTO ALLOWS A 36% INCREASE IN STRESS FOR TEMPORARY LOADS (18 KSI INVENTORY RATING VERSUS 24.5 KSI OPERATING RATING). THE UNIFORM DESIGN FOR LOAD GIRDERS BRIDGES IS 64 PSF, AND THUS, THE ANTICIPATED WEIGHT OF THE PLATFORM CONTAINMENT (APPROX. 19 PSF) ADDED TO THIS ORIGINAL DESIGN LOADING RESULTS IN A MAXIMUM D+L LOADING OF 83 PSF ON THE GIRDERS (19 PSF + 64 PSF EQUIVALENT LIVE LOADING). TEMPORARY LOADING APPLIED TO THE BRIDGE MEMBERS RESULT IN A MAXIMUM 30% INCREASE, WHICH IS BELOW THE 36% INCREASED ALLOWED BY AASHTO. SINCE THE METHOD ASSUMES THAT THE EXISTING BRIDGE MEMBERS ARE 100% STRESSED PRIOR TO LOADING, THIS GENERAL COMPARISON IS CONSIDERED VERY CONSERVATIVE.

GENERAL:

THESE DRAWINGS DEPICT THE PAINT CONTAINMENT DESIGNS TO BE UTILIZED BY MONOKO, LLC., FOR BENNINGTON AND RUTLAND COUNTIES, VERMONT FOR THE FOLLOWING BRIDGES:

BRIDGE NO. 11 (BENNINGTON COUNTY) US ROUTE 7 OVER ROARING BRANCH
BRIDGE NO. D15 (BENNINGTON COUNTY) TH NO. 14 OVER US ROUTE 7
BRIDGE NO. 16N (BENNINGTON COUNTY) US ROUTE 7 OVER BENN SH N
BRIDGE NO. 16S (BENNINGTON COUNTY) US ROUTE 7 OVER BENN SH N
BRIDGE NO. 56C (RUTLAND COUNTY) US ROUTE 7 OVER MILL BROOK

THE CONTRACTOR SHALL PROVIDE A MULTI-STAGE DECONTAMINATION TRAILER AND WATER WASH FACILITY FOR THE DURATION OF THE PROJECT, LOCATED AT AN APPROPRIATE SITE DETERMINED BY THE CONTRACTOR.

WORKERS WILL ACCESS THE BELOW-DECK CONTAINMENTS AT THE ABUTMENTS, FROM THE BRIDGE DECK ABOVE USING LADDERS. THE LADDERS WILL BE SECURED TO THE BRIDGE RAILINGS AND/OR TRUSS STEEL AT THE TOP AND TO THE PLATFORM SYSTEMS AT THE BOTTOM.

FOR WORK PERFORMED FROM 500 LBS RATED ALUMINUM SCAFFOLDS SUPPORTED BY ½" Ø CABLES RIGGED ALONG THE ENTIRE LENGTH OF THE BRIDGE, WORKER SAFETY TIE-OFF CABLES AND WORKER HARNESSES WILL BE UTILIZED DURING ALL WORK, INCLUDING INSTALLATION & REMOVAL OF THE PLATFORM SYSTEMS & DURING TRAVEL UP & DOWN THE LADDERS, IN ACCORDANCE WITH OSHA GUIDELINES.

THE ABRASIVE BLASTING CONTAINMENT AND/OR SUSPENDED PLATFORM DESIGNS, DETAILS AND INSTALLATION SPECIFICATIONS INCLUDED IN THIS PACKAGE WERE PREPARED UNDER THE DIRECTION OF THE CONTRACTOR. BY ACCEPTING THESE PLANS FOR SUBMITTAL, THE CONTRACTOR CONFIRMS THAT THE PLANS HAVE BEEN REVIEWED FOR CORRECTNESS, AND THAT THE SYSTEMS WILL BE INSTALLED IN ACCORDANCE WITH THE PLANS.

THE CONTRACTOR FULLY UNDERSTANDS & AGREES THAT A2B ENGINEERING, LLC AND THEIR CERTIFYING ENGINEER(S) ARE NOT RESPONSIBLE FOR THE ULTIMATE TECHNIQUES AND/OR METHODS OF CONSTRUCTION USED ON THIS PROJECT, OR THE SAFETY PRECAUTIONS & PROGRAMS INCIDENT THERETO, OR FOR ANY LOSS OR DAMAGES RESULTING FROM THE CONTRACTOR'S FAILURE TO COMPLY WITH LAWS AND REGULATIONS (PRIMARILY OSHA) APPLICABLE TO THE FURNISHING, INSTALLING AND/OR PERFORMANCE OF WORK.

THE CONTRACTOR FULLY UNDERSTANDS & AGREES THAT A2B ENGINEERING, LLC HAS PREPARED THESE SUBMITTALS WITH THE UNDERSTANDING THAT THE CONTRACTOR AND THEIR EMPLOYEES HAVE THE KNOWLEDGE & EXPERTISE IN THE PROPER RIGGING OF THE CATENARY CONTAINMENT & WORKER ACCESS SYSTEMS PRESENTED ON THESE DRAWINGS, INCLUDING ALL OSHA REQUIREMENTS, AND IS NOT IN NEED OF DETAILED INSTALLATION AND/OR DISMANTLING PROCEDURES FOR SUCH INSTALLATIONS.

THE CONTRACTOR FULLY UNDERSTANDS & AGREES THAT BY ACCEPTING THESE DRAWINGS FOR SUBMITTAL, THEY ARE FULLY RESPONSIBLE FOR COMPLYING WITH ALL FEDERAL, STATE & LOCAL CODES & REGULATIONS (PRIMARILY OSHA) AND HERE-BY HOLDS A2B ENGINEERING, LLC AND THEIR CERTIFYING ENGINEER(S) HARMLESS, AND INDEMNIFIES THEM FOR ANY LOSS OR DAMAGES RESULTING FROM THE CONTRACTOR'S FAILURE TO COMPLY WITH ANY/ALL APPLICABLE CODES, REGULATIONS AND/OR ANY MANUFACTURER'S INSTALLATION REQUIREMENTS, REGARDLESS OF WHETHER SAID INFORMATION IS OR IS NOT INCLUDED AS PART OF THESE SUBMITTALS.

THESE DRAWINGS & CALCULATIONS (IF APPLICABLE) HAVE BEEN PREPARED FOR THIS PROJECT ONLY. A2B ENGINEERING, LLC AND THEIR CERTIFYING ENGINEER(S) HAVE NO LIABILITY SHOULD ANY PORTIONS OF THESE DRAWINGS AND/OR CALCULATIONS BE USED FOR DIFFERENT PROJECT.

THESE PLANS WERE PREPARED WITHOUT THE BENEFIT OF AS-BUILT BRIDGE PLANS. DUE TO UNCERTAINTIES OF THE EXISTING STRUCTURE, THE CONTRACTOR MAY MAKE MINOR MODIFICATIONS TO THE PAINT CONTAINMENT STRUCTURE DETAILED IN THESE PLANS. A2B ENGINEERING, LLC SHALL BE NOTIFIED OF ANY MODIFICATIONS TO ENSURE THAT THE STRUCTURAL INTEGRITY OF THE PAINT CONTAINMENT STRUCTURE IS NOT COMPROMISED.

STATE OF VERMONT
PAUL R. STEIJLEN
NO. 107795
CIVIL
4-6-16
LICENSED
PROFESSIONAL ENGINEER

Bridge Nos. All

REVISIONS

DATE	BY	DESCRIPTION
02 29 16	PRS	⚠ GENERAL REVISION
04 06 16	PRS	⚠ GENERAL REVISION

$FILES

PAUL STEIJLEN P.E.
P.E. LICENSE NUMBER 107795
A2B ENGINEERING, LLC.
5406 N. HOOVER BLVD., SUITE 12
TAMPA, FL 33634

MONOKO, LLC.
1037 PENINSULA AVENUE
TARPON SPRINGS, FL 34689
PHONE (727) 940-3244
FAX (727) 279-8795

DRAWN BY	BDN 11/15
CHECKED BY	PDB 11/15
DESIGNED BY	MAT 11/15
CHECKED BY	PRS 11/15

VERMONT AGENCY OF TRANSPORTATION

ROAD NO	COUNTY	PROJECT ID
	BENNINGTON RUTLAND	BF BPNT (16)

$USERS

SHEET TITLE: GENERAL NOTES (1 OF 2)

PROJECT NAME: FIVE BRIDGES ON OR OVER US ROUTE 7

REF. DWG NO

SHEET NO: C-2

$DATES $TIMES

CONTAINMENT ENCLOSURE:

THE ABRASIVE BLASTING CONTAINMENT SYSTEM SHALL CONFORM TO THE REQUIREMENTS OF OSHA 1926 SUBPART L, OSHA 29 CFR 1910.28, ANSI A10.8 AND SSPC GUIDE 6.

ALL ABRASIVE BLAST CLEANING CONTAINMENTS, INCLUDING GROUND COVER, SIDEWALLS AND ENDWALLS, SHALL BE CONSTRUCTED OF 100% AIR IMPERMEABLE FIRE RESISTANT TARPAULINS. ADJACENT TARPAULIN PANELS SHALL BE FASTENED TOGETHER BY ROLLING AND CLAMPING OR BY CLAMPING TO LUMBER TO CREATE A CONTINUOUS IMPENETRABLE SEAL. THE CONTRACTOR MAY USE ANY APPROPRIATE METHOD AVAILABLE (TAPE, SPRAY FOAM, ETC) TO PROVIDE A CONTINUOUS SEAL TO CONTAIN DUST EMISSIONS (ABRASIVE BLASTING) AND/OR SOLVENT CLEANING/WATER WASHING OPERATIONS. SEE MISCELLANEOUS CONTAINMENT DETAILS SHEETS.

FOR BRIDGE TO GRADE CONTAINMENTS, THE TARPAULIN BASE SHALL BE SEALED WITH SANDBAGS OR SIMILAR WEIGHTS. FOR SSPC CLASS 1A CONTAINMENTS, LUMBER PLANKS OR ALUMINUM SCAFFOLDS SHALL BE PLACED BELOW THE SANDBAGS TO PROVIDE A "CONTINUOUS" SEAL. FOR CLASS 2A CONTAINMENTS (OR LESSER), USE SANDBAGS OR SIMILAR WEIGHTED MATERIAL AT 5 FT (±) INTERVALS. FOR VERTICAL CONTAINMENTS, THE CONTRACTOR MAY UTILIZE CABLES ANCHORED WITH WEIGHTS OR ANCHORED TO THE GROUND TO SUPPORT THE VERTICAL TARPAULIN WALLS.

FOR PLATFORM AND CABLE SUPPORTED CONTAINMENTS, TARPAULIN WALLS SHALL BE SECURED TO APPROPRIATE BRIDGE ELEMENTS TO SEAL THE ENCLOSURE.

EXISTING BRIDGE DRAINS ENCLOSED WITHIN THE PAINT CONTAINMENT STRUCTURE SHALL BE TEMPORARILY PLUGGED OR WATER RUNOFF DIRECTED AWAY FROM THE CONTAINMENT ENCLOSURE AS SPECIFIED OR PERMITTED IN THE CONTRACT SPECIFICATIONS. AT THE CONCLUSION OF EACH WORKDAY, ALL PLUGGED DRAINS SHALL BE UNPLUGGED TO RESTORE DECK DRAINAGE. AT THE CONCLUSION OF THE BRIDGE CLEANING AND PAINTING OPERATIONS, RESTORE BRIDGE DRAINAGE TO THE SATISFACTION OF THE ENGINEER. ⚠1

WHEN ABRASIVE BLASTING IS PERFORMED NEAR THE TARPAULIN WALL, THE ABRASIVE BLAST SHALL BE DIRECTED AWAY FROM THE TARPAULIN WALL. WHEN WORK IS PERFORMED NEAR AN INLET OPENING, THE OPENING SHALL BE TEMPORARILY SEALED TO MINIMIZE LOSS OF EMISSIONS.

TARPAULINS SHALL BE 100% AIR/WATER IMPERMEABLE TO CONTAIN THE WASTE WATER AND BLASTING DEBRIS AND ALLOW FOR VACUUMING.

FOR SSPC TYPE 1A CONTAINMENTS, WORKERS SHALL ACCESS EACH CONTAINMENT THROUGH DOUBLE DOOR AIRLOCK ENTRANCE WHICH ALLOWS THE WORKERS TO SEAL ONE DOOR PRIOR TO ENTERING/EXITING THE CONTAINMENT THROUGH THE OTHER DOOR. TARPAULIN DOORS SHALL BE CLOSED AND SEALED DURING BLASTING OPERATIONS TO PREVENT LOSS OF EMISSIONS. MINIMIZE PASSAGE IN AND OUT OF CONTAINMENT STRUCTURES DURING BLASTING OPERATIONS. DURING SANDBLASTING OPERATIONS, ALL WORKERS/PERSONNEL SHALL BE CLEANED WITH A HEPA VACUUM PRIOR TO LEAVING THE CONTAINMENT. ⚠2

FOR SSPC TYPE 2A CONTAINMENTS (OR LESSER), WORKERS SHALL ACCESS EACH CONTAINMENT THROUGH OVERLAPPING TARPAULIN DOORS. TARPAULIN DOORS SHALL BE CLOSED AND SEALED DURING BLASTING OPERATIONS TO PREVENT LOSS OF EMISSIONS. MINIMIZE PASSAGE IN AND OUT OF CONTAINMENT STRUCTURES DURING BLASTING OPERATIONS. SEE MISCELLANEOUS CONTAINMENT DETAILS SHEETS.

AT THE CONCLUSION OF EACH WORK DAY, THE CONTRACTOR SHALL THOROUGHLY COLLECT AND REMOVE ALL SPENT ABRASIVE MATERIAL AND DEBRIS GENERATED FROM THE BLASTING AND PAINTING ACTIVITIES USING A VACUUM TRUCK AND/OR PUMP. DURING SANDBLASTING OPERATIONS, ALL WORKERS/PERSONNEL SHALL BE CLEANED WITH A HANDHELD HEPA VACUUM PRIOR TO LEAVING THE CONTAINMENT. ⚠3

CONTAINMENT NOTES:

ALL WORK SHALL BE ASSEMBLED IN ACCORDANCE WITH THESE DRAWINGS, THE MANUFACTURER'S INSTRUCTIONS AND CRITERIA, INDUSTRY GUIDELINES AND THE MOST CURRENT EDITION OF ALL FEDERAL, STATE AND LOCAL REGULATIONS, STATUTES ORDINANCES, AND THE PROJECT SPECIFICATIONS. A2B ENGINEERING, LLC SHALL BE NOTIFIED WHERE DISCREPANCIES EXIST BETWEEN THESE DRAWINGS AND THE MANUFACTURER'S INSTRUCTIONS TO VERIFY THE APPROPRIATE CRITERIA.

THE CONTRACTOR IS SOLELY RESPONSIBLE TO ENSURE THAT ALL FALL PROTECTION IS INSTALLED PER OSHA AND PROJECT SPECIFICATIONS.

PRIOR TO CONSTRUCTION OF THE PAINT CONTAINMENT STRUCTURE ALL MATERIAL SHALL BE THOROUGHLY INSPECTED TO ENSURE THAT THEY CONTAIN NO DEFICIENCIES THAT WILL COMPROMISE THE STRUCTURAL INTEGRITY OF THE PAINT CONTAINMENT STRUCTURE. THE CONTRACTOR SHALL PERFORM PERIODIC INSPECTIONS OF THE PAINT CONTAINMENT STRUCTURE TO ENSURE THE STRUCTURAL INTEGRITY OF THE STRUCTURE REMAINS SECURE.

VENTILATION SYSTEM:

THE CONTRACTOR SHALL PROVIDE MECHANICAL EXHAUST VENTILATION FOR THE ABRASIVE BLASTING CONTAINMENT STRUCTURES USING ONE OR MORE MOBILE DUST COLLECTORS. THE CONTRACTOR PROPOSES TO USE ONE (1) 45,000 AT 13" W.G. CFM MOBILE DUST COLLECTOR MANUFACTURED BY ADVANCED RECYCLING SYSTEMS, INC. THE DUST COLLECTOR HAS AN ASSUMED DUST EXHAUST CAPACITY BASED ON THE NUMBER OF DUCTS PROVIDED AS:

EXHAUST CAPACITY WITH 4 - 20 INCH DIAMETER DUCTS:	48,000 CFM
EXHAUST CAPACITY WITH 3 - 20 INCH DIAMETER DUCTS:	45,000 CFM
EXHAUST CAPACITY WITH 2 - 20 INCH DIAMETER DUCTS:	40,000 CFM
EXHAUST CAPACITY WITH 1 - 20 INCH DIAMETER DUCT:	24,000 CFM

REFER TO PLAN SHEETS FOR NUMBER OF EXHAUST DUCTS AND INLET AREA REQUIREMENTS.

THE MAIN OBJECTIVE FOR USING THE NEGATIVE AIR EXHAUST VENTILATION SYSTEM IS TO CONTAIN AIRBORNE PARTICULATE WITHIN THE CONTAINMENT STRUCTURE AND PROVIDE AIR FLOW THROUGH THE CONTAINMENT STRUCTURE. CONTAINMENT SIDEWALLS, ENDWALLS AND GROUND COVERS SHALL BE CONSTRUCTED AND SEALED TO PREVENT EXCESSIVE LEAKS BETWEEN THE PANELS AND ALONG THE GROUND. A PRELIMINARY VENTILATION SYSTEM TEST OF EACH CONTAINMENT SHALL BE PERFORMED PRIOR TO STARTING ABRASIVE BLASTING OPERATIONS. AIR FLOW THROUGH THE CONTAINMENT SHALL BE VERIFIED AT MULTIPLE LOCATIONS THROUGHOUT THE CONTAINMENT USING A HAND-HELD MANOMETER. IF THE EXHAUST VENTILATION SYSTEM IS UNABLE TO ACHIEVE THE SPECIFIED AIR FLOW THROUGH THE CONTAINMENT STRUCTURE OR ADEQUATELY REMOVE AIRBORNE PARTICULATE MATTER, THE CONTRACTOR SHALL PROVIDE ADDITIONAL DUST COLLECTORS AND EXHAUST DUCTS, OR REDUCE THE SIZE OF THE ACTIVE PAINT CONTAINMENT ENCLOSURE BY INSTALLING INTERNAL TARPAULIN WALLS. THE EXHAUST VENTILATION SYSTEMS SHALL REMAIN IN OPERATION DURING CLEANING AND VACUUMING OPERATIONS. ⚠

VENTILATION SYSTEM TABLE (CROSS-DRAFT)				
NO. OF 20" Ø DUCTS PROVIDED	4	3	2	1
VOLUME Q, CFM	48,000	45,000	40,000	24,000
MAX. CONTAINMENT AREA, SQ. FT. (V=100 FT/MIN.)	480.0	450.0	400.0	240.0
MIN. CONTAINMENT AREA, SQ. FT. (V=300 FT/MIN.)	160.0	150.0	133.3	80.0
MAX. INLET AREA, SQ. FT. (V=700 FT/MIN)	68.6	64.3	57.1	34.3
MIN. INLET AREA, SQ. FT. (V=1000 FT/MIN)	48.0	45.0	40.0	24.0

⚠3

STATE OF VERMONT
PAUL R. STEIJLEN
NO. 107795
CIVIL
5-5-16
LICENSED
PROFESSIONAL ENGINEER

Bridge Nos. All

REVISIONS		
DATE	BY	DESCRIPTION
02/29/16	PRS	⚠1 GENERAL REVISION
05/05/16	PRS	⚠2 GENERAL REVISION

PAUL STEIJLEN P.E.
P.E. LICENSE NUMBER 107795
A2B ENGINEERING, LLC.
5406 N. HOOVER BLVD., SUITE 12
TAMPA, FL 33634

MONOKO, LLC.
1037 PENINSULA AVENUE
TARPON SPRINGS, FL 34689
PHONE (727) 940-3244
FAX (727) 279-8795

DRAWN BY:	BDN 11/15
CHECKED BY:	PDB 11/15
DESIGNED BY:	MAT 11/15
CHECKED BY:	PRS 11/15

VERMONT AGENCY OF TRANSPORTATION

ROAD NO.	COUNTY	PROJECT ID
	BENNINGTON RUTLAND	BF BPNT (16)

SHEET TITLE: GENERAL NOTES (2 OF 2)

PROJECT NAME: FIVE BRIDGES ON OR OVER US ROUTE 7

REF. DWG. NO.

SHEET NO. C-3

P:\127 Monoko, LLC\17 Bennington-Mt. Tabor\1 Containment Plans\Cadd\BOGenNotes01.dgn User 5/5/2016 2:08:08 PM

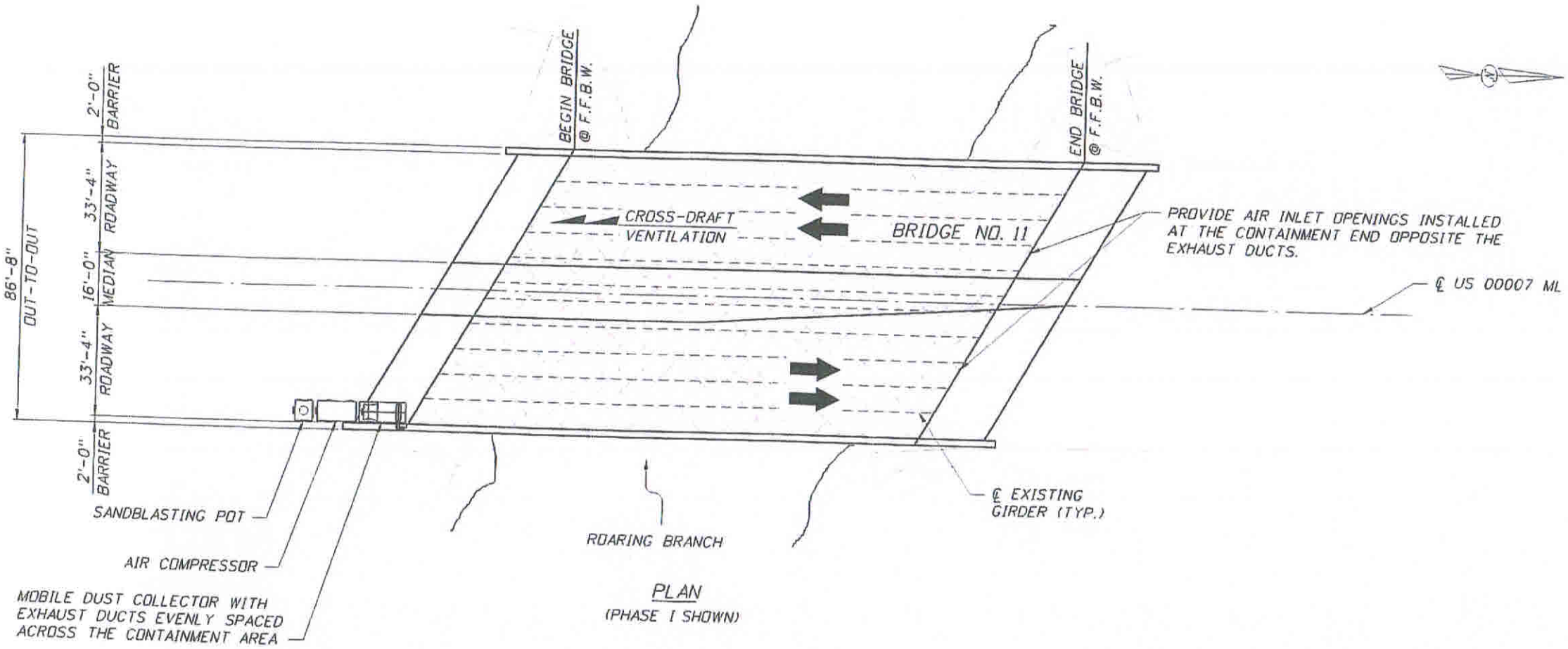

PLAN
(PHASE I SHOWN)

NOTES:

1. THESE PLANS WERE PREPARED WITHOUT THE BENEFIT OF AS-BUILT BRIDGE PLANS. THE CONTRACTOR SHALL MAKE ALLOWANCE FOR BRIDGE ELEMENTS AND MODIFICATIONS NOT SHOWN ON THESE PLANS.
2. WORK PHASE I SHOWN SCHEMATICALLY. REFERENCE MOT PLANS FOR LIMITS OF WORK PHASES.
3. WORK PHASE I MAY BE WORKED IN ANY ORDER AT THE CONVENIENCE OF THE CONTRACTOR'S MEANS AND METHODS, TRAFFIC PATTERNS AND DENSITY, OR OTHER SITE CHARACTERISTICS THAT INFLUENCE A PREFERRED WORK AREA.
4. THE CONTRACTOR HAS THE OPTION TO USE ADDITIONAL MOBILE DUST COLLECTORS, OR PLACE LONGITUDINAL OR TRANSVERSE INTERMEDIATE TARPAULIN WALLS.
5. FOR ADDITIONAL DETAILS, SEE CONTAINMENT MISCELLANEOUS DETAILS SHEETS.

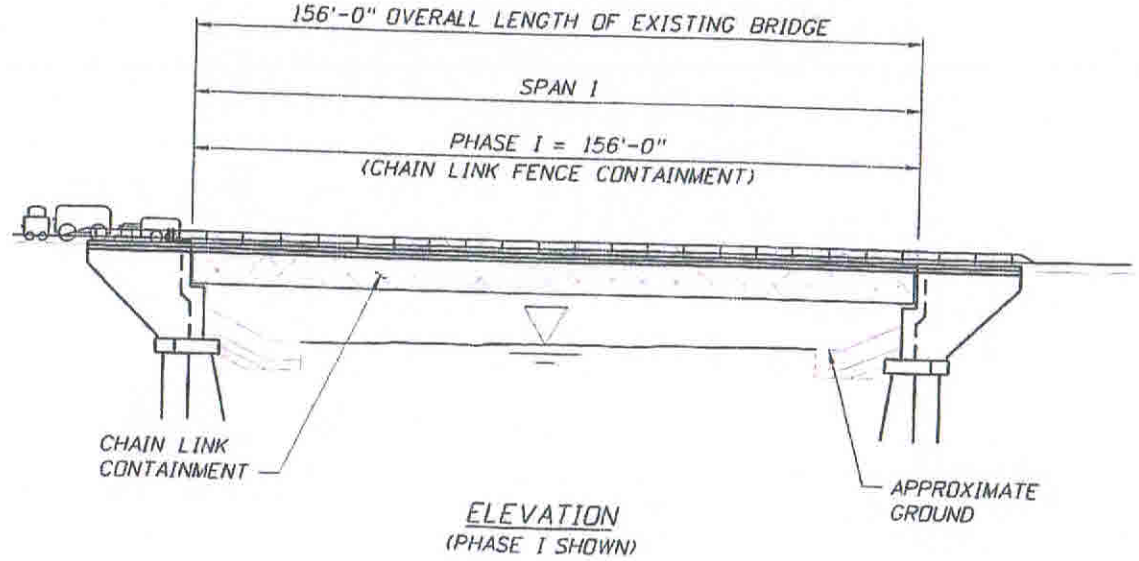

ELEVATION
(PHASE I SHOWN)

STATE OF VERMONT
PAUL R. STEIJLEN
NO. 107795
CIVIL
12-16-15
LICENSED PROFESSIONAL ENGINEER

Bridge No. 11

REVISIONS		
DATE	BY	DESCRIPTION

PAUL STEIJLEN P.E.
P.E. LICENSE NUMBER 107795
A2B ENGINEERING, LLC.
5406 N. HOOVER BLVD., SUITE 12
TAMPA, FL 33634

MONOKO, LLC.
1037 PENINSULA AVENUE
TARPON SPRINGS, FL 34689
PHONE (727) 940-3244
FAX (727) 279-8795

DRAWN BY: BDN 11/15
CHECKED BY: PDB 11/15
DESIGNED BY: MAT 11/15
CHECKED BY: PRS 11/15

VERMONT AGENCY OF TRANSPORTATION

ROAD NO.	COUNTY	PROJECT ID
	BENNINGTON	BF BPNT (16)

SHEET TITLE: PLAN & ELEVATION
REF. DWG. NO.
PROJECT NAME: FIVE BRIDGES ON OR OVER US ROUTE 7
SHEET NO. C-4

P:\187 Monoko, LLC\17 Bennington-Rt. Taber\T Containment Plans\Cadd\BTPlanElev.dgn
Cad12
12/16/2015 9:47:12 AM

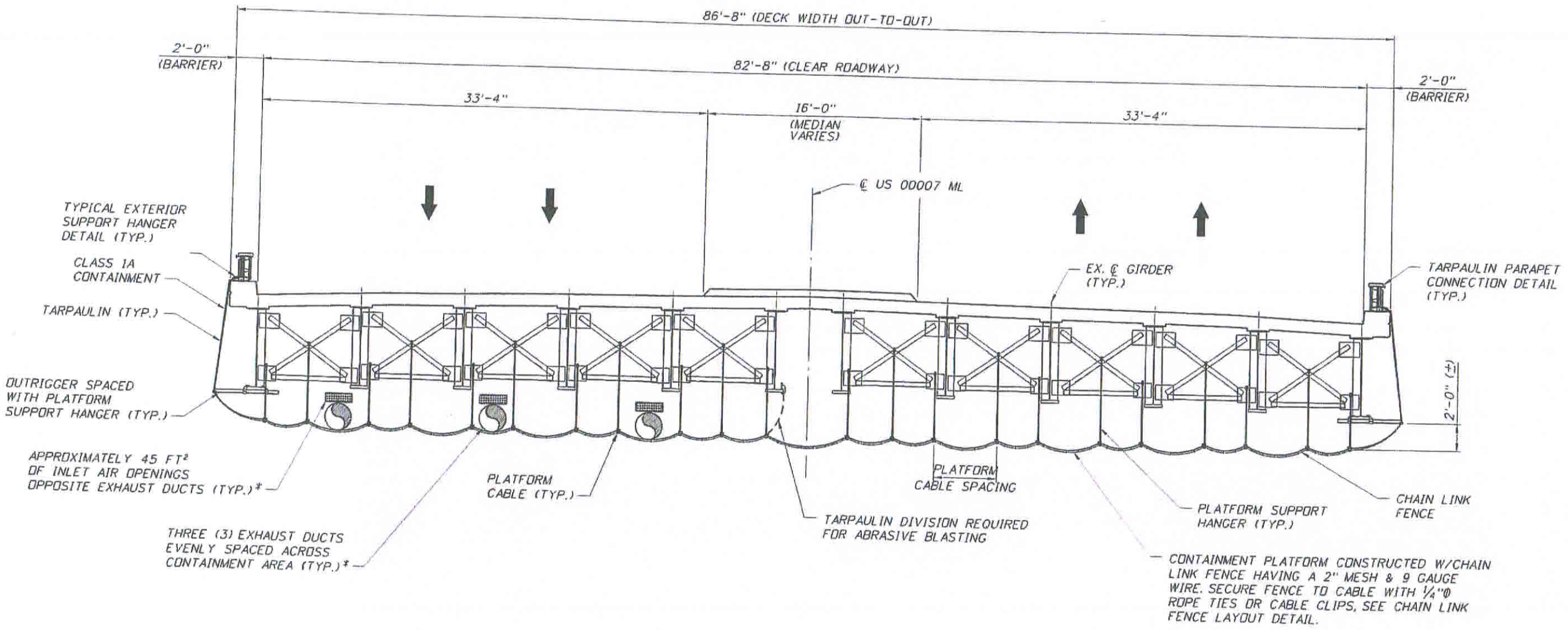

TYPICAL SECTION

(MOBILE DUST COLLECTOR NOT SHOWN FOR CLARITY)

* BASED ON MAXIMUM CONTAINMENT AREA OF 450 FT² AS MEASURED PERPENDICULAR TO THE DIRECTION OF CROSS-DRAFT (SEE VENTILATION SYSTEM TABLE ON GENERAL NOTES SHEETS)

NOTES:

1. THESE PLANS WERE PREPARED WITHOUT THE BENEFIT OF AS-BUILT BRIDGE PLANS. THE CONTRACTOR SHALL MAKE ALLOWANCE FOR BRIDGE ELEMENTS AND MODIFICATIONS NOT SHOWN ON THESE PLANS.
2. THE CONTRACTOR SHALL AVOID ATTACHING/CONNECTING TO BRIDGE ELEMENTS EXHIBITING SIGNIFICANT SECTION LOSS.
3. FOR ADDITIONAL DETAILS, SEE CONTAINMENT MISCELLANEOUS DETAILS SHEETS.
4. CONTRACTOR TO PROVIDE LIFE LINES MEETING OSHA 1910.66 APPENDIX C AS REQUIRED.

STATE OF VERMONT
PAUL R. STEIJLEN
NO. 107795
11-16-15
LICENSED
PROFESSIONAL ENGINEER

REVISIONS		
DATE	BY	DESCRIPTION

PAUL STEIJLEN P.E.
P.E. LICENSE NUMBER 107795
A2B ENGINEERING, LLC.
5406 N. HOOVER BLVD., SUITE 12
TAMPA, FL 33634

MONOKO, LLC.
1037 PENINSULA AVENUE
TARPON SPRINGS, FL 34689
PHONE (727) 940-3244
FAX (727) 279-8795

DRAWN BY:	CHECKED BY:	DESIGNED BY:	CHECKED BY:
BDN 11/15	PDB 11/15	MAT 11/15	PRS 11/15

VERMONT AGENCY OF TRANSPORTATION

ROAD NO.	COUNTY	PROJECT ID
	BENNINGTON	BF BPNT (16)

Bridge No. 11

SHEET TITLE: CONTAINMENT SECTION DETAILS

REF. DWG. NO.:

PROJECT NAME: FIVE BRIDGES ON OR OVER US ROUTE 7

SHEET NO.: C-5

P:\187 Monoko, LLC\17 Bennington-Mt. Tabor\1 Containment Plans\Cadd\SD1Typical01.dgn

Cad12

12/16/2015 9:47:15 AM

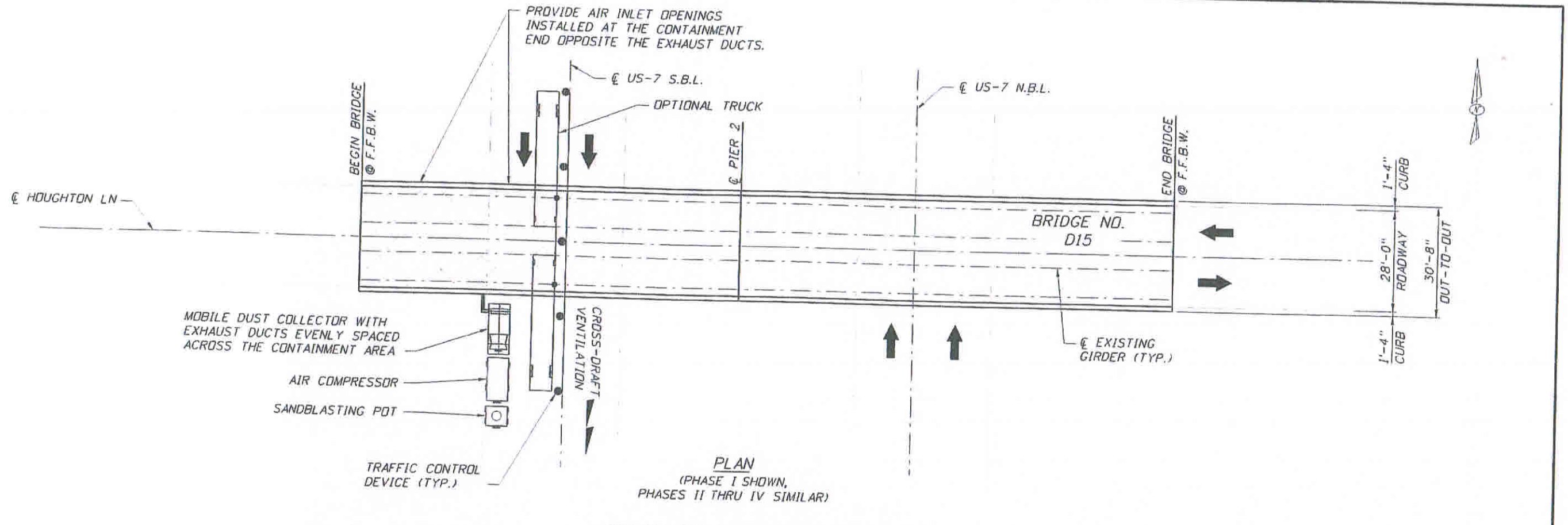

PLAN
(PHASE I SHOWN, PHASES II THRU IV SIMILAR)

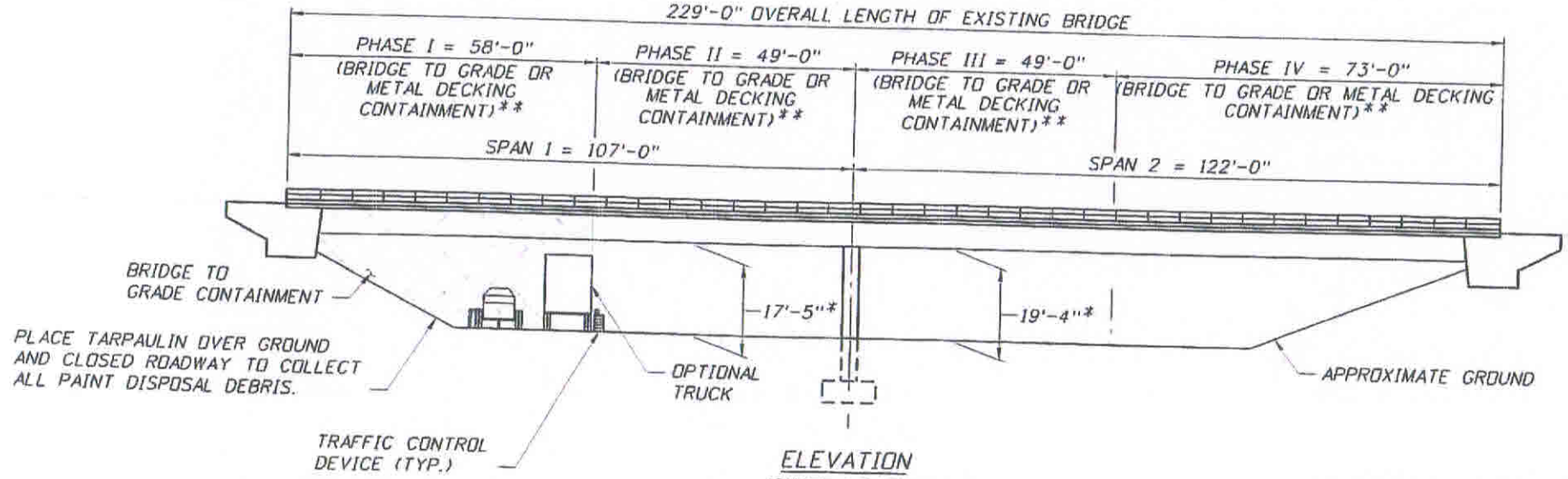

ELEVATION
(PHASE I SHOWN, PHASES II THRU IV SIMILAR)

NOTES:

1. THESE PLANS WERE PREPARED WITHOUT THE BENEFIT OF AS-BUILT BRIDGE PLANS. THE CONTRACTOR SHALL MAKE ALLOWANCE FOR BRIDGE ELEMENTS AND MODIFICATIONS NOT SHOWN ON THESE PLANS.
2. WORK PHASES I-IV SHOWN SCHEMATICALLY. REFERENCE MOT PLANS FOR LIMITS OF WORK PHASES.
3. WORK PHASES I-IV MAY BE WORKED IN ANY ORDER AT THE CONVENIENCE OF THE CONTRACTOR'S MEANS AND METHODS, TRAFFIC PATTERNS AND DENSITY, OR OTHER SITE CHARACTERISTICS THAT INFLUENCE A PREFERRED WORK AREA.
4. THE CONTRACTOR HAS THE OPTION TO USE ADDITIONAL MOBILE DUST COLLECTORS, OR PLACE LONGITUDINAL OR TRANSVERSE INTERMEDIATE TARPAULIN WALL.
5. FOR ADDITIONAL DETAILS, SEE CONTAINMENT MISCELLANEOUS DETAILS SHEETS.

* EXISITNG MINIMUM VERTICAL CLEARANCE BASED ON EXISTING BRIDGE PLANS. CONTRACTOR SHALL OBTAIN APPROVAL FOR REDUCTION OF EXISTING VERTICAL CLEARANCE AND RAISE CABLES AS NEEDED OVER ACTIVE ROADWAY.

** CONTRACTOR MAY USE BRIDGE-TO-GRADE OPTION FOR PRESSURE WASHING OPERATIONS AND METAL DECKING CONTAINMENT FOR ABRASIVE BLASTING OPERATIONS.

STATE OF VERMONT
PAUL R. STEIJLEN
NO. 107795
CIVIL
LICENSED
PROFESSIONAL ENGINEER

REVISIONS		
DATE	BY	DESCRIPTION

PAUL STEIJLEN P.E.
P.E. LICENSE NUMBER 107795
A2B ENGINEERING, LLC.
5406 N. HOOVER BLVD., SUITE 12
TAMPA, FL 33634

MONOKO, LLC.
1037 PENINSULA AVENUE
TARPON SPRINGS, FL 34689
PHONE (727) 940-3244
FAX (727) 279-8795

DRAWN BY:	BDN 11/15
CHECKED BY:	PDB 11/15
DESIGNED BY:	MAT 11/15
CHECKED BY:	PRS 11/15

VERMONT AGENCY OF TRANSPORTATION

ROAD NO.	COUNTY	PROJECT ID
	BENNINGTON	BF BPNT (16)

Bridge No. D15

SHEET TITLE: PLAN & ELEVATION

REF. DWG. NO.:

PROJECT NAME: FIVE BRIDGES ON OR OVER US ROUTE 7

SHEET NO.: C-6

P:\187 Monoko, LLC\17 Bennington-Mt. Tabor\1 Containment Plans\Cadd\02PlanElev.dgn

Cad12

12/16/2015 9:47:18 AM

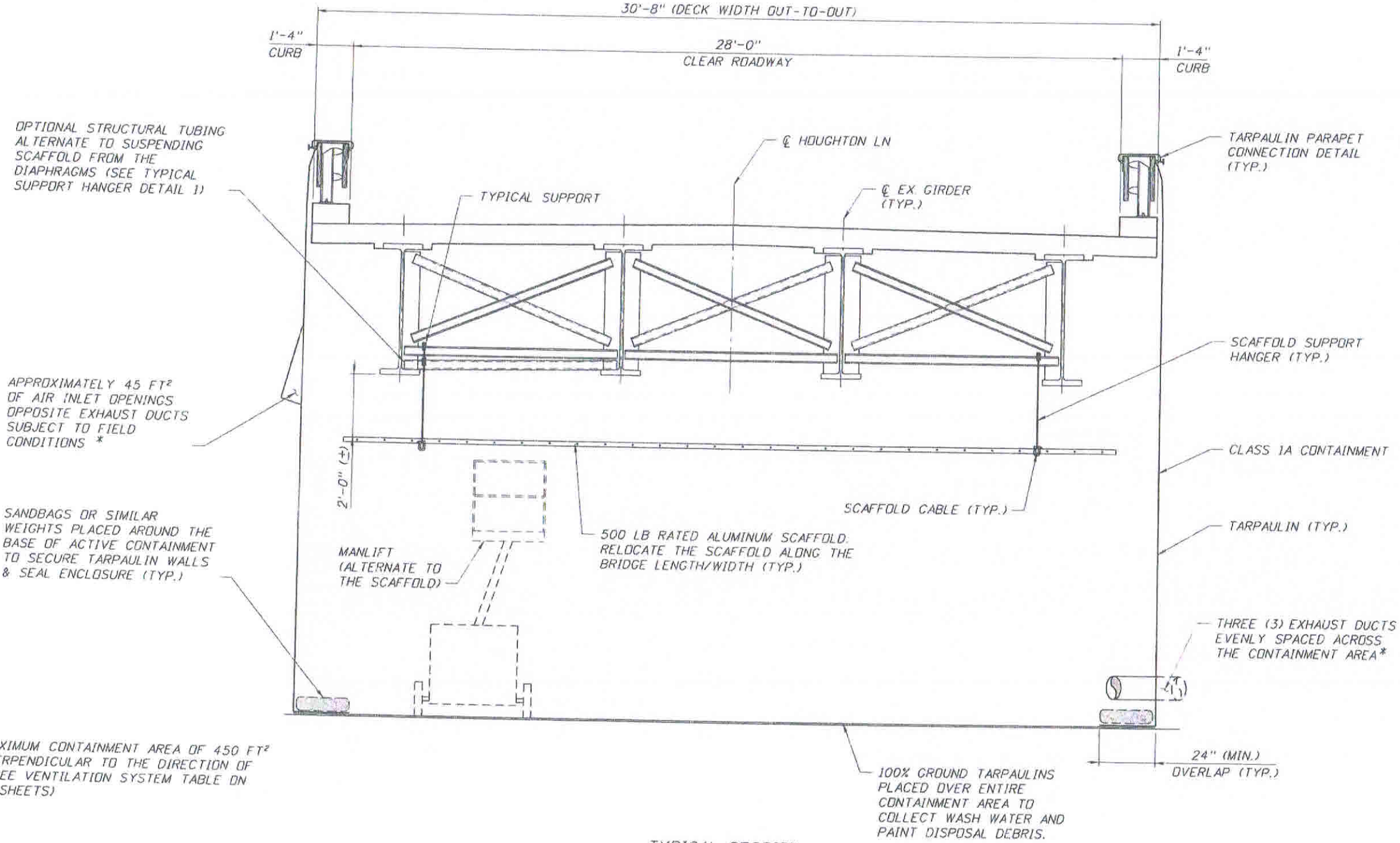

* BASED ON MAXIMUM CONTAINMENT AREA OF 450 FT² AS MEASURED PERPENDICULAR TO THE DIRECTION OF CROSS-DRAFT (SEE VENTILATION SYSTEM TABLE ON GENERAL NOTES SHEETS)

TYPICAL SECTION

(PHASES I THRU IV)

(MOBILE DUST COLLECTOR NOT SHOWN FOR CLARITY)

NOTES:

1. THESE PLANS WERE PREPARED WITHOUT THE BENEFIT OF AS-BUILT BRIDGE PLANS. THE CONTRACTOR SHALL MAKE ALLOWANCE FOR BRIDGE ELEMENTS AND MODIFICATIONS NOT SHOWN ON THESE PLANS.
2. THE CONTRACTOR SHALL AVOID ATTACHING/CONNECTING TO BRIDGE ELEMENTS EXHIBITING SIGNIFICANT SECTION LOSS.
3. FOR ADDITIONAL DETAILS, SEE CONTAINMENT MISCELLANEOUS DETAILS SHEETS.
4. CONTRACTOR TO PROVIDE LIFE LINES MEETING OSHA 1910.66 APPENDIX C AS REQUIRED.
5. TARPAULINS SHALL BE REMOVED AND ROLLED UP DURING NON-WORKING HOURS.

STATE OF VERMONT
PAUL R. STEIJLEN
NO. 107795
CIVIL
5-5-16
LICENSED
PROFESSIONAL ENGINEER

Bridge No. D15

REVISIONS		
DATE	BY	DESCRIPTION
05/05/16	PRS	△3 GENERAL REVISION

PAUL STEIJLEN P.E.
P.E. LICENSE NUMBER 107795
A2B ENGINEERING, LLC.
5406 N. HOOVER BLVD., SUITE 12
TAMPA, FL 33634

MONOKO, LLC.
1037 PENINSULA AVENUE
TARPON SPRINGS, FL 34689
PHONE (727) 940-3244
FAX (727) 279-8795

DRAWN BY: BDN 11/15
CHECKED BY: PDB 11/15
DESIGNED BY: MAT 11/15
CHECKED BY: PRS 11/15

VERMONT AGENCY OF TRANSPORTATION

ROAD NO.	COUNTY	PROJECT ID
	BENNINGTON	BF BPNT (16)

SHEET TITLE: CONTAINMENT SECTION DETAILS (1 OF 3) △3

PROJECT NAME: FIVE BRIDGES ON OR OVER US ROUTE 7

REF. DWG. NO.

SHEET NO. C-7

P:\187 Monoko, LLC\17 Bennington-Mt. Tabor\1 Containment Plans\Cadd\B2Typical01.dgn

User 5/5/2016 2:30:04 PM

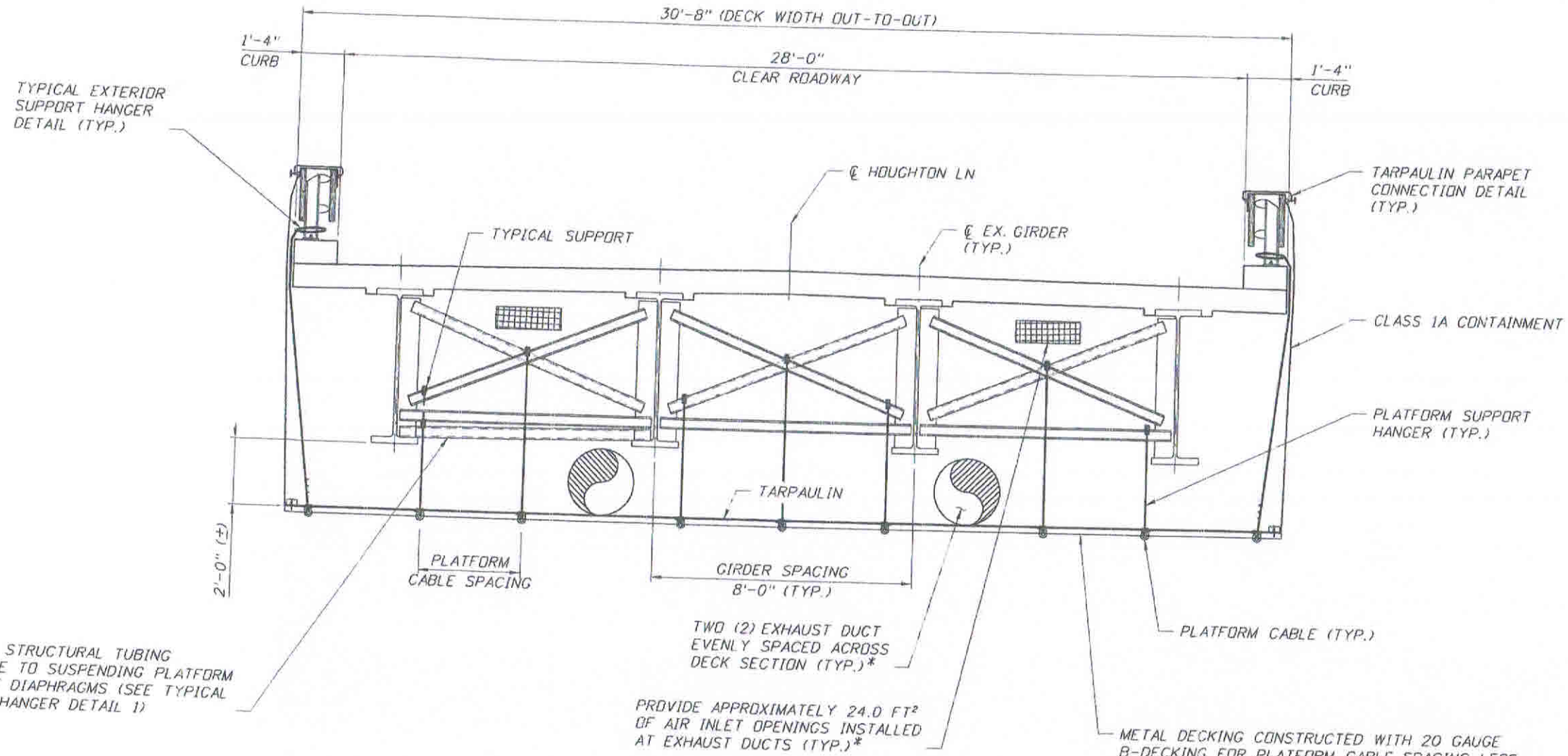

* BASED ON MAXIMUM CONTAINMENT AREA OF 240 FT² AS MEASURED PERPENDICULAR TO THE DIRECTION OF CROSS-DRAFT (SEE VENTILATION SYSTEM TABLE ON GENERAL NOTES SHEETS)

TYPICAL SECTION

(PHASES I THRU IV)
(MOBILE DUST COLLECTOR NOT SHOWN FOR CLARITY)

NOTES:

1. THESE PLANS WERE PREPARED WITHOUT THE BENEFIT OF AS-BUILT BRIDGE PLANS. THE CONTRACTOR SHALL MAKE ALLOWANCE FOR BRIDGE ELEMENTS AND MODIFICATIONS NOT SHOWN ON THESE PLANS.
2. THE CONTRACTOR SHALL AVOID ATTACHING/CONNECTING TO BRIDGE ELEMENTS EXHIBITING SIGNIFICANT SECTION LOSS.
3. FOR ADDITIONAL DETAILS, SEE CONTAINMENT MISCELLANEOUS DETAILS SHEETS.
4. CONTRACTOR TO PROVIDE LIFE LINES MEETING OSHA 1910.66 APPENDIX C AS REQUIRED.

STATE OF VERMONT
PAUL STEIJLEN
NO. 107795
CIVIL
LICENSED
PROFESSIONAL ENGINEER

REVISIONS		
DATE	BY	DESCRIPTION
05/05/16	PRS	⚠ GENERAL REVISION

PAUL STEIJLEN P.E.
P.E. LICENSE NUMBER 107795
A2B ENGINEERING, LLC.
5406 N. HOOVER BLVD., SUITE 12
TAMPA, FL 33634

MONOKO, LLC.
1037 PENINSULA AVENUE
TARPON SPRINGS, FL 34689
PHONE (727) 940-3244
FAX (727) 279-8795

DRAWN BY: BDN 11/15
CHECKED BY: PDB 11/15
DESIGNED BY: MAT 11/15
CHECKED BY: PRS 11/15

VERMONT AGENCY OF TRANSPORTATION

ROAD NO.	COUNTY	PROJECT ID
	BENNINGTON	BF BPNT 116)

Bridge No. D15

SHEET TITLE: CONTAINMENT SECTION DETAILS (2 OF 3) ⚠
PROJECT NAME: FIVE BRIDGES ON OR OVER US ROUTE 7
REF. DWG. NO.
SHEET NO. C-8

P:\187 Monoko, LLC\17 Bennington-Mt Tabor\3 Containment Plans\Cadd\B2Typical02.dgn
User
5/5/2016 2:08:29 PM

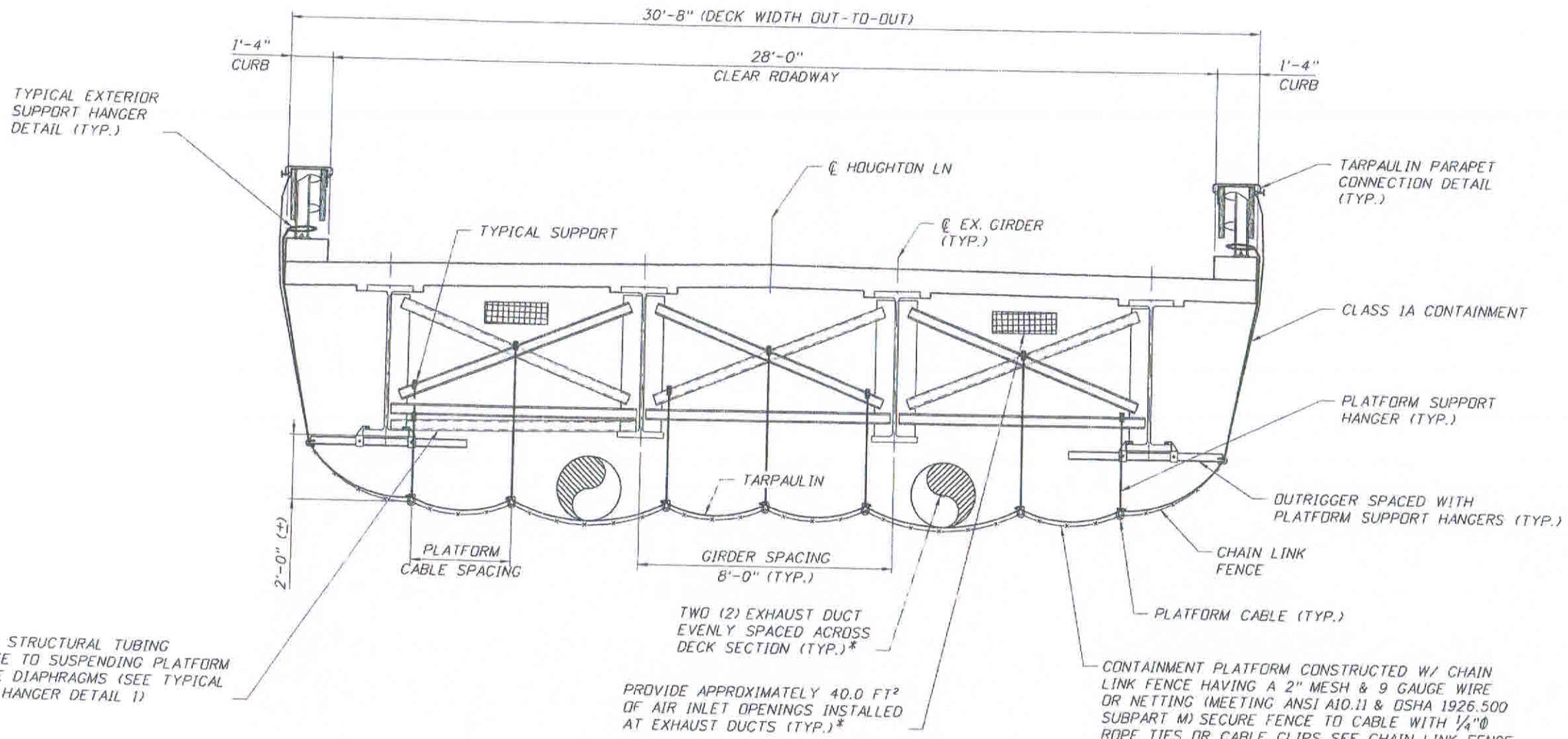

* BASED ON MAXIMUM CONTAINMENT AREA OF 240 FT² AS MEASURED PERPENDICULAR TO THE DIRECTION OF CROSS-DRAFT (SEE VENTILATION SYSTEM TABLE ON GENERAL NOTES SHEETS)

TYPICAL SECTION

(PHASES I THRU IV)
(MOBILE DUST COLLECTOR NOT SHOWN FOR CLARITY)

NOTES:

1. THESE PLANS WERE PREPARED WITHOUT THE BENEFIT OF AS-BUILT BRIDGE PLANS. THE CONTRACTOR SHALL MAKE ALLOWANCE FOR BRIDGE ELEMENTS AND MODIFICATIONS NOT SHOWN ON THESE PLANS.
2. THE CONTRACTOR SHALL AVOID ATTACHING/CONNECTING TO BRIDGE ELEMENTS EXHIBITING SIGNIFICANT SECTION LOSS.
3. FOR ADDITIONAL DETAILS, SEE CONTAINMENT MISCELLANEOUS DETAILS SHEETS.
4. CONTRACTOR TO PROVIDE LIFE LINES MEETING OSHA 1910.66 APPENDIX C AS REQUIRED.

STATE OF VERMONT
PAUL R. STEIJLEN
NO. 107795
CIVIL
LICENSED
PROFESSIONAL ENGINEER
5-5-16

Bridge No. D15

REVISIONS		
DATE	BY	DESCRIPTION
05/05/16	PRS	⚠ GENERAL REVISION

PAUL STEIJLEN P.E.
P.E. LICENSE NUMBER 107795
A2B ENGINEERING, LLC.
5406 N. HOOVER BLVD., SUITE 12
TAMPA, FL 33634

MONOKO, LLC.
1037 PENINSULA AVENUE
TARPON SPRINGS, FL 34689
PHONE (727) 940-3244
FAX (727) 279-8795

DRAWN BY:	BDN 11/15
CHECKED BY:	PDB 11/15
DESIGNED BY:	MAT 11/15
CHECKED BY:	PRS 11/15

VERMONT AGENCY OF TRANSPORTATION

ROAD NO.	COUNTY	PROJECT ID
	BENNINGTON	BF BPNT (16)

SHEET TITLE: CONTAINMENT SECTION DETAILS (3 OF 3)
REF. DWG. NO.:
PROJECT NAME: FIVE BRIDGES ON OR OVER US ROUTE 7
SHEET NO.: C-8A

P:\167 Monoko, LLC\17 Bennington-Mt. Tabor\1 Containment Plans\Cadd\B2Typical02A.dgn
User
5/5/2016 2:08:32 PM

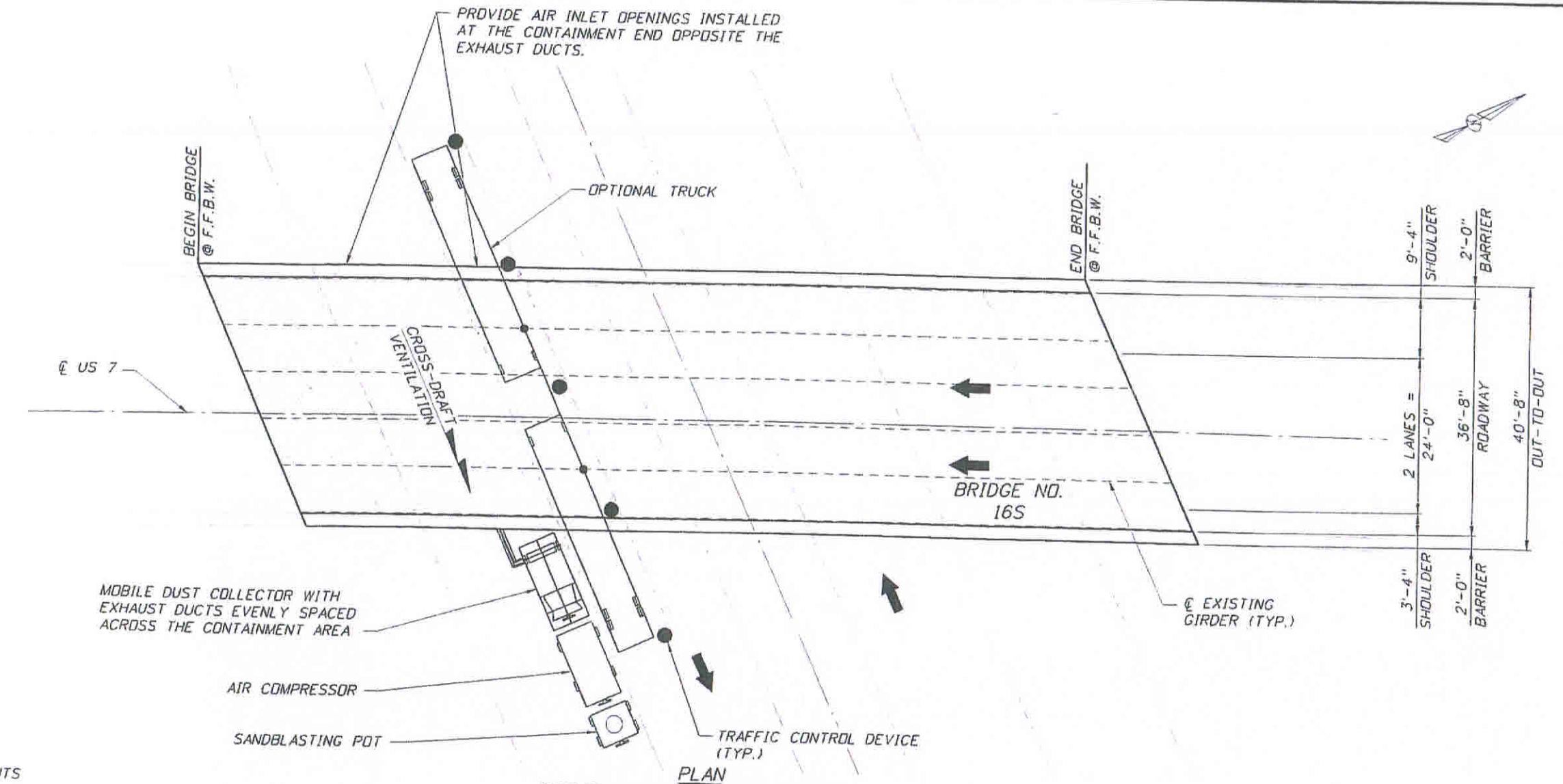

PLAN
(BRIDGE 16S SHOWN, BRIDGE 16N SIMILAR)
(PHASE I SHOWN, PHASE II & III SIMILAR)

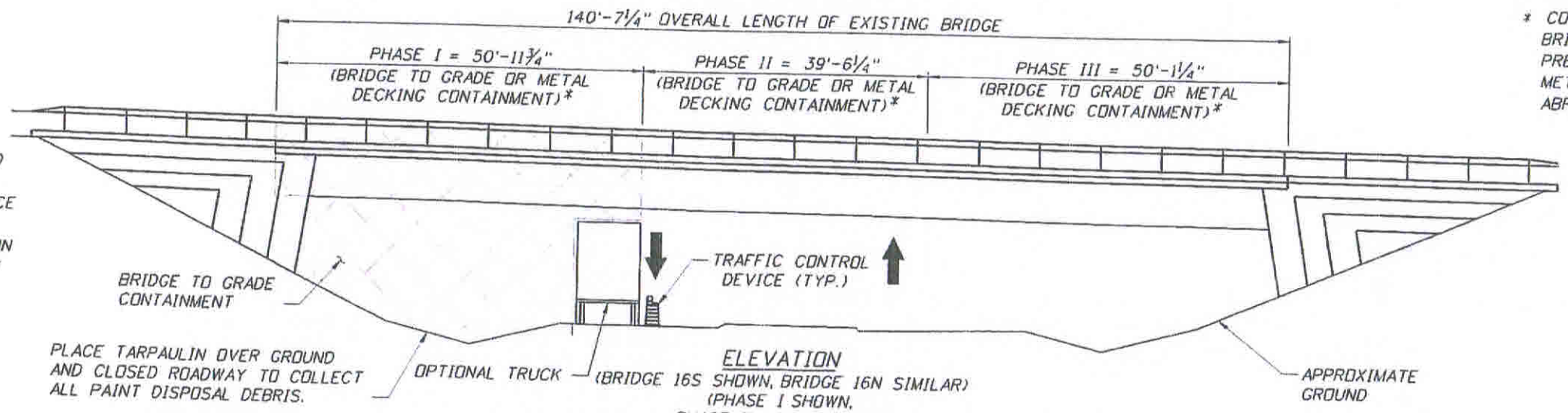

ELEVATION
(BRIDGE 16S SHOWN, BRIDGE 16N SIMILAR)
(PHASE I SHOWN, PHASE II & III SIMILAR)

NOTES:

1. THESE PLANS WERE PREPARED WITHOUT THE BENEFIT OF AS-BUILT BRIDGE PLANS. THE CONTRACTOR SHALL MAKE ALLOWANCE FOR BRIDGE ELEMENTS AND MODIFICATIONS NOT SHOWN ON THESE PLANS.
2. WORK PHASES I-III SHOWN SCHEMATICALLY. REFERENCE MOT PLANS FOR LIMITS OF WORK PHASES.
3. WORK PHASES I-III MAY BE WORKED IN ANY ORDER AT THE CONVENIENCE OF THE CONTRACTOR'S MEANS AND METHODS, TRAFFIC PATTERNS AND DENSITY, OR OTHER SITE CHARACTERISTICS THAT INFLUENCE A PREFERRED WORK AREA.
4. THE CONTRACTOR HAS THE OPTION TO USE ADDITIONAL MOBILE DUST COLLECTORS, OR PLACE LONGITUDINAL OR TRANSVERSE INTERMEDIATE TARPAULIN WALL.
5. FOR ADDITIONAL DETAILS, SEE CONTAINMENT MISCELLANEOUS DETAILS SHEETS.

* CONTRACTOR MAY USE BRIDGE-TO-GRADE OPTION FOR PRESSURE WASHING OPERATIONS AND METAL DECKING CONTAINMENT FOR ABRASIVE BLASTING OPERATIONS.

STATE OF VERMONT
PAUL R. STEIJLEN
NO. 107795
CIVIL
12-16-15
LICENSED PROFESSIONAL ENGINEER

Bridge No. 16N & 16S

REVISIONS		
DATE	BY	DESCRIPTION

PAUL STEIJLEN P.E.
P.E. LICENSE NUMBER 107795
A2B ENGINEERING, LLC.
5406 N. HOOVER BLVD., SUITE 12
TAMPA, FL 33634

MONOKO, LLC.
1037 PENINSULA AVENUE
TARPON SPRINGS, FL 34689
PHONE (727) 940-3244
FAX (727) 279-8795

DRAWN BY:	BDN 11/15
CHECKED BY:	PDB 11/15
DESIGNED BY:	MAT 11/15
CHECKED BY:	PRS 11/15

VERMONT AGENCY OF TRANSPORTATION

ROAD NO.	COUNTY	PROJECT ID
	BENNINGTON	BF BPNT (16)

SHEET TITLE: PLAN & ELEVATION

REF. DWG. NO.:

PROJECT NAME: FIVE BRIDGES ON OR OVER US ROUTE 7

SHEET NO.: C-9

P:\187 Monoko, LLC\17 Bennington-Mt. Tabor\1 Containment Plans\Cadd\B3PlanElev.dgn

Cad12

12/16/2015 9:55:05 AM

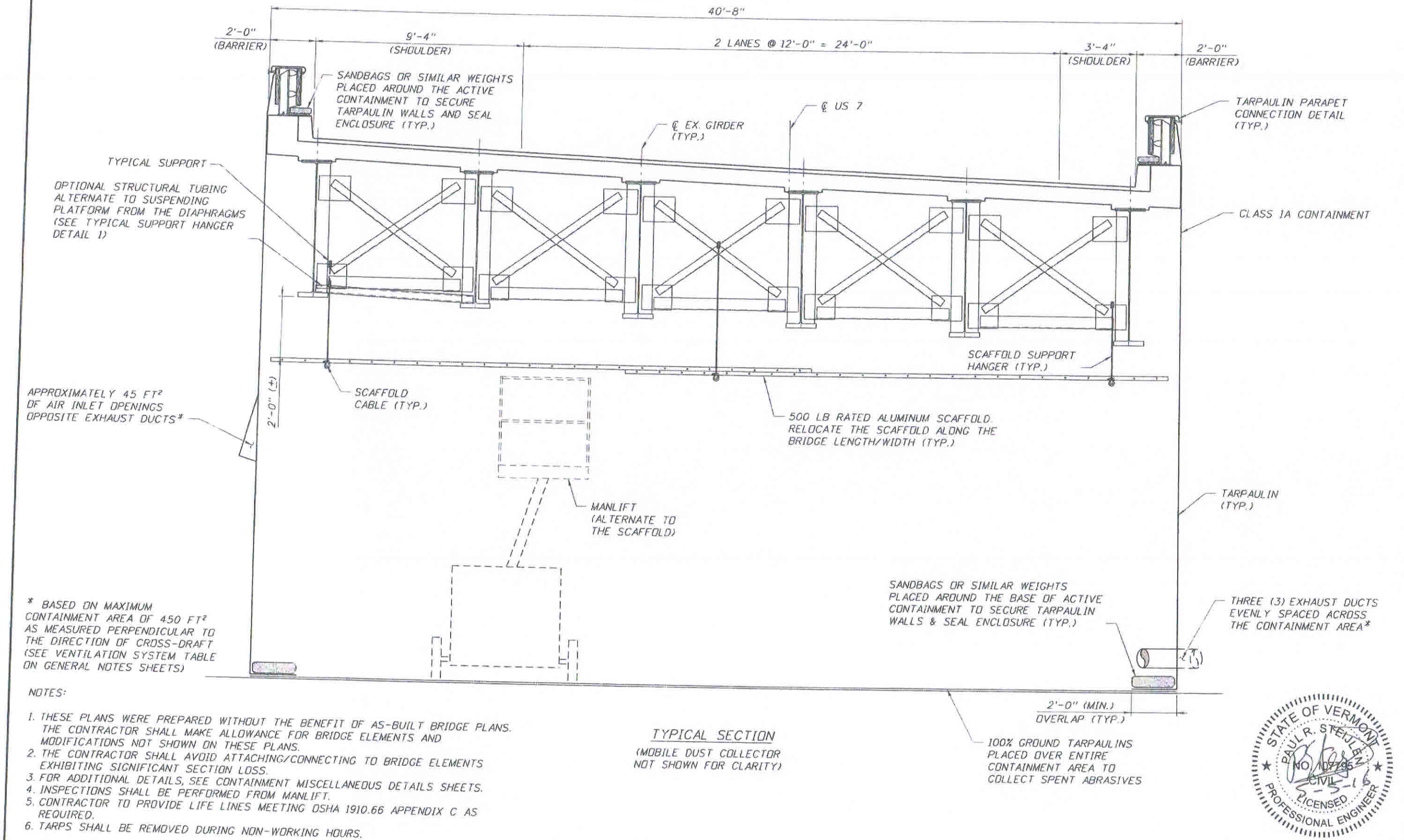

* BASED ON MAXIMUM CONTAINMENT AREA OF 450 FT² AS MEASURED PERPENDICULAR TO THE DIRECTION OF CROSS-DRAFT (SEE VENTILATION SYSTEM TABLE ON GENERAL NOTES SHEETS)

TYPICAL SECTION

(MOBILE DUST COLLECTOR NOT SHOWN FOR CLARITY)

NOTES:

1. THESE PLANS WERE PREPARED WITHOUT THE BENEFIT OF AS-BUILT BRIDGE PLANS. THE CONTRACTOR SHALL MAKE ALLOWANCE FOR BRIDGE ELEMENTS AND MODIFICATIONS NOT SHOWN ON THESE PLANS.
2. THE CONTRACTOR SHALL AVOID ATTACHING/CONNECTING TO BRIDGE ELEMENTS EXHIBITING SIGNIFICANT SECTION LOSS.
3. FOR ADDITIONAL DETAILS, SEE CONTAINMENT MISCELLANEOUS DETAILS SHEETS.
4. INSPECTIONS SHALL BE PERFORMED FROM MANLIFT.
5. CONTRACTOR TO PROVIDE LIFE LINES MEETING OSHA 1910.66 APPENDIX C AS REQUIRED.
6. TARPS SHALL BE REMOVED DURING NON-WORKING HOURS.

STATE OF VERMONT
PAUL R. STEIJLEN
NO. 107795
CIVIL
5-5-16
LICENSED
PROFESSIONAL ENGINEER

Bridge No. 16N & 16S

REVISIONS		
DATE	BY	DESCRIPTION
05/05/16	PRS	⚠ GENERAL REVISION

PAUL STEIJLEN P.E.
P.E. LICENSE NUMBER 107795
A2B ENGINEERING, LLC.
5406 N. HOOVER BLVD., SUITE 12
TAMPA, FL 33634

MONOKO, LLC.
1037 PENINSULA AVENUE
TARPON SPRINGS, FL 34689
PHONE (727) 940-3244
FAX (727) 279-8795

DRAWN BY:	BDN 11/15
CHECKED BY:	PDB 11/15
DESIGNED BY:	MAT 11/15
CHECKED BY:	PRS 11/15

VERMONT AGENCY OF TRANSPORTATION

ROAD NO.	COUNTY	PROJECT ID
	BENNINGTON	BF BPNT (16)

SHEET TITLE: CONTAINMENT SECTION DETAILS (1 OF 3) ⚠

REF. DWG. NO.

PROJECT NAME: FIVE BRIDGES ON OR OVER US ROUTE 7

SHEET NO. C-10

P:\187 Monoko, LLC\17 Bennington-Mt. Tabor\1 Containment Plans\Cadd\B3Typical01.dgn

User

5/5/2016 2:08:41 PM

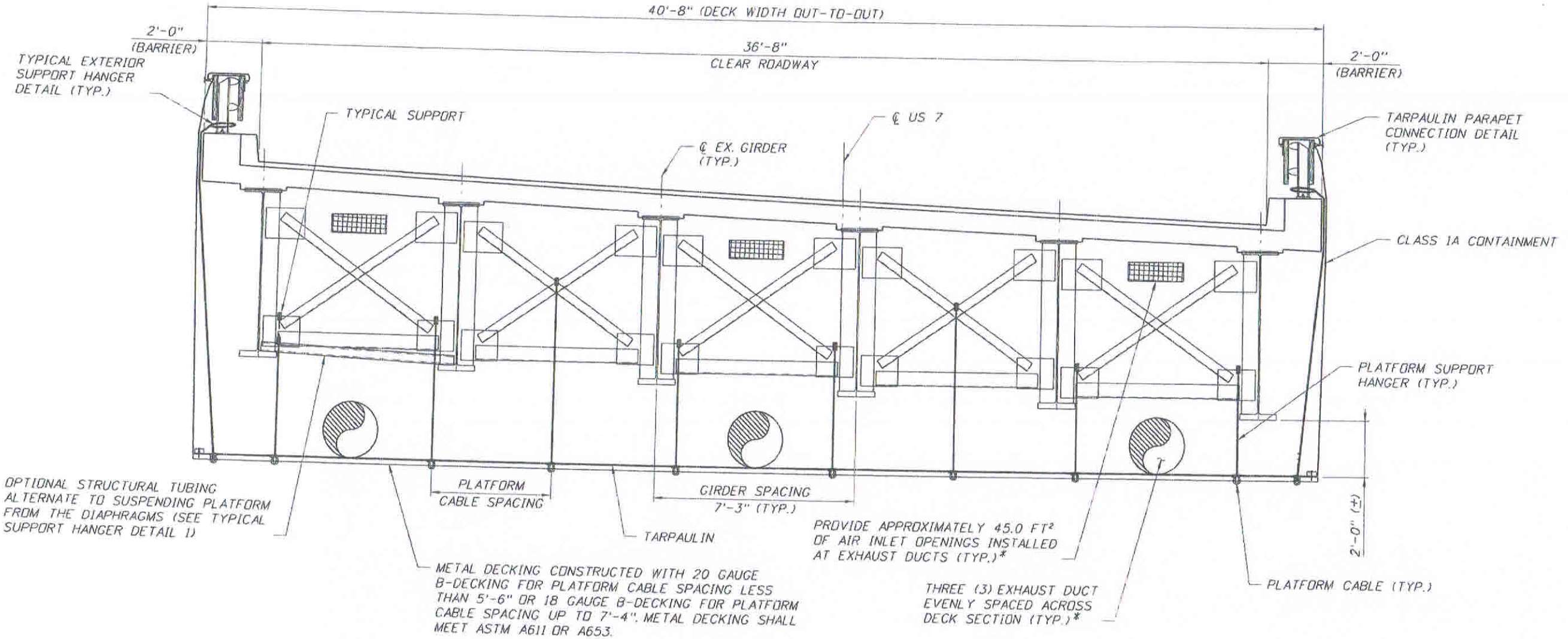

* BASED ON MAXIMUM CONTAINMENT AREA OF 350 FT² AS MEASURED PERPENDICULAR TO THE DIRECTION OF CROSS-DRAFT (SEE VENTILATION SYSTEM TABLE ON GENERAL NOTES SHEETS)

TYPICAL SECTION

(PHASES I THRU III)
(MOBILE DUST COLLECTOR NOT SHOWN FOR CLARITY)

NOTES:

1. THESE PLANS WERE PREPARED WITHOUT THE BENEFIT OF AS-BUILT BRIDGE PLANS. THE CONTRACTOR SHALL MAKE ALLOWANCE FOR BRIDGE ELEMENTS AND MODIFICATIONS NOT SHOWN ON THESE PLANS.
2. THE CONTRACTOR SHALL AVOID ATTACHING/CONNECTING TO BRIDGE ELEMENTS EXHIBITING SIGNIFICANT SECTION LOSS.
3. FOR ADDITIONAL DETAILS, SEE CONTAINMENT MISCELLANEOUS DETAILS SHEETS.
4. CONTRACTOR TO PROVIDE LIFE LINES MEETING OSHA 1910.66 APPENDIX C AS REQUIRED.

STATE OF VERMONT
PAUL R. STEIJLEN
NO. 107795
CIVIL
5-5-16
LICENSED
PROFESSIONAL ENGINEER

REVISIONS		
DATE	BY	DESCRIPTION
02/29/16	PRS	1 GENERAL REVISION
05/05/16	PRS	2 GENERAL REVISION

PAUL STEIJLEN P.E.
P.E. LICENSE NUMBER 107795
A2B ENGINEERING, LLC.
5406 N. HOOVER BLVD., SUITE 12
TAMPA, FL 33634

MONOKO, LLC.
1037 PENINSULA AVENUE
TARPON SPRINGS, FL 34689
PHONE (727) 940-3244
FAX (727) 279-8795

DRAWN BY:	BDN 11/15
CHECKED BY:	PDB 11/15
DESIGNED BY:	MAT 11/15
CHECKED BY:	PRS 11/15

VERMONT AGENCY OF TRANSPORTATION

ROAD NO.	COUNTY	PROJECT ID
	BENNINGTON	BF BPNT (16)

SHEET TITLE: CONTAINMENT SECTION DETAILS (2 OF 3) 1
PROJECT NAME: FIVE BRIDGES ON OR OVER US ROUTE 7
REF. DWG. NO.
SHEET NO. C-11

Bridge No. 16N & 16S

P:\187 Horoka, LLC\17 Bennington-Mt. Tabor\1 Containment Plans\Cadd\B2Typical03.dgn
User
5/5/2016 2:08:45 PM

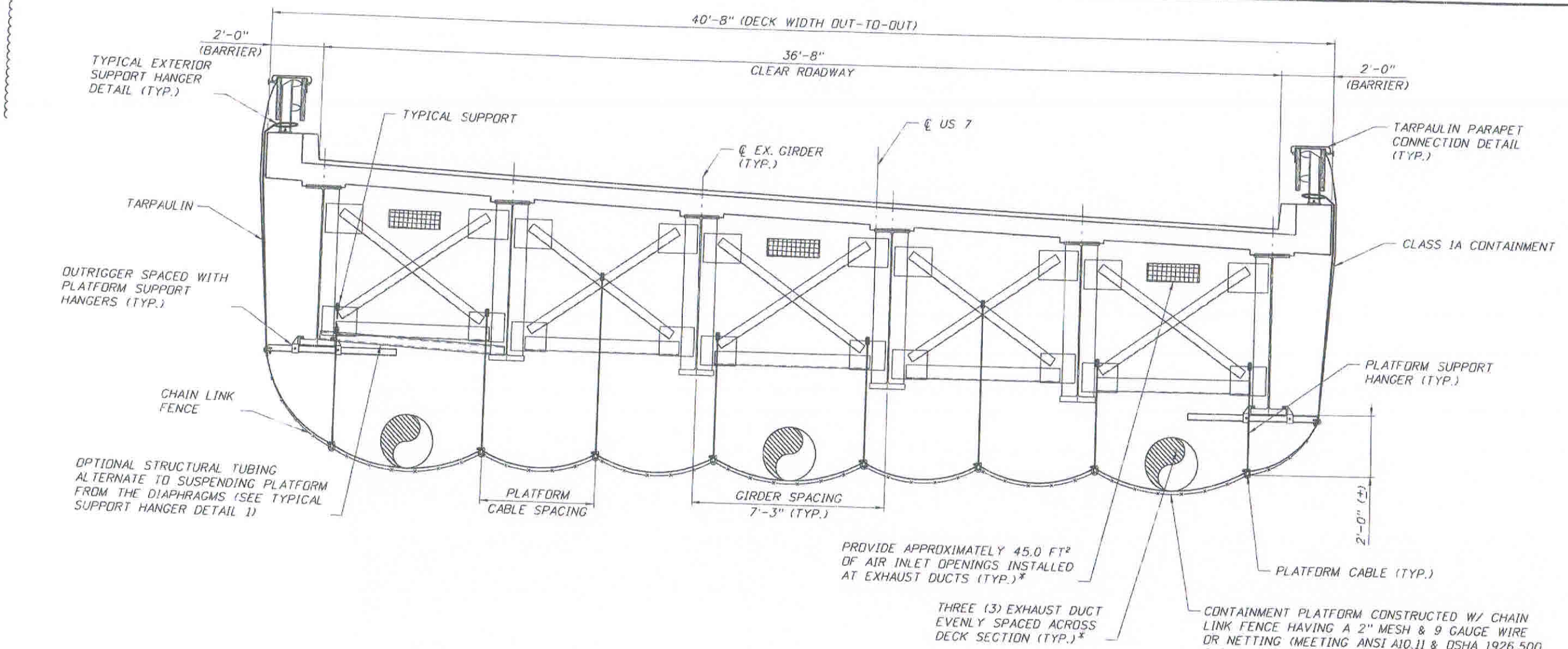

* BASED ON MAXIMUM CONTAINMENT AREA OF 350 FT² AS MEASURED PERPENDICULAR TO THE DIRECTION OF CROSS-DRAFT (SEE VENTILATION SYSTEM TABLE ON GENERAL NOTES SHEETS)

TYPICAL SECTION

(PHASES I THRU III)
(MOBILE DUST COLLECTOR NOT SHOWN FOR CLARITY)

NOTES:

1. THESE PLANS WERE PREPARED WITHOUT THE BENEFIT OF AS-BUILT BRIDGE PLANS. THE CONTRACTOR SHALL MAKE ALLOWANCE FOR BRIDGE ELEMENTS AND MODIFICATIONS NOT SHOWN ON THESE PLANS.
2. THE CONTRACTOR SHALL AVOID ATTACHING/CONNECTING TO BRIDGE ELEMENTS EXHIBITING SIGNIFICANT SECTION LOSS.
3. FOR ADDITIONAL DETAILS, SEE CONTAINMENT MISCELLANEOUS DETAILS SHEETS.
4. CONTRACTOR TO PROVIDE LIFE LINES MEETING OSHA 1910.66 APPENDIX C AS REQUIRED.

STATE OF VERMONT
PAUL R. STEIJLEN
NO. 107795
CIVIL
LICENSED
PROFESSIONAL ENGINEER
5-5-16

REVISIONS		
DATE	BY	DESCRIPTION
02/29/16	PRS	⚠1 GENERAL REVISION
05/05/16	PRS	⚠2 GENERAL REVISION

PAUL STEIJLEN P.E.
P.E. LICENSE NUMBER 107795
A2B ENGINEERING, LLC.
5406 N. HOOVER BLVD., SUITE 12
TAMPA, FL 33634

MONOKO, LLC.
1037 PENINSULA AVENUE
TARPON SPRINGS, FL 34689
PHONE (727) 940-3244
FAX (727) 279-8795

DRAWN BY:	BDN 11/15
CHECKED BY:	PDB 11/15
DESIGNED BY:	MAT 11/15
CHECKED BY:	PRS 11/15

VERMONT AGENCY OF TRANSPORTATION

ROAD NO.	COUNTY:	PROJECT ID
	BENNINGTON	BF BPNT (16)

⚠Bridge No. 16N & 16S

SHEET TITLE: CONTAINMENT SECTION DETAILS (3 OF 3)
REF. DWG. NO.:
PROJECT NAME: FIVE BRIDGES ON OR OVER US ROUTE 7
SHEET NO.: C-11A

P:\187 Monoko, LLC\17 Bennington-Mt. Tabor\1 Containment Plans\Cadd\B2Typical03A.dgn
User
5/5/2016 2:08:49 PM

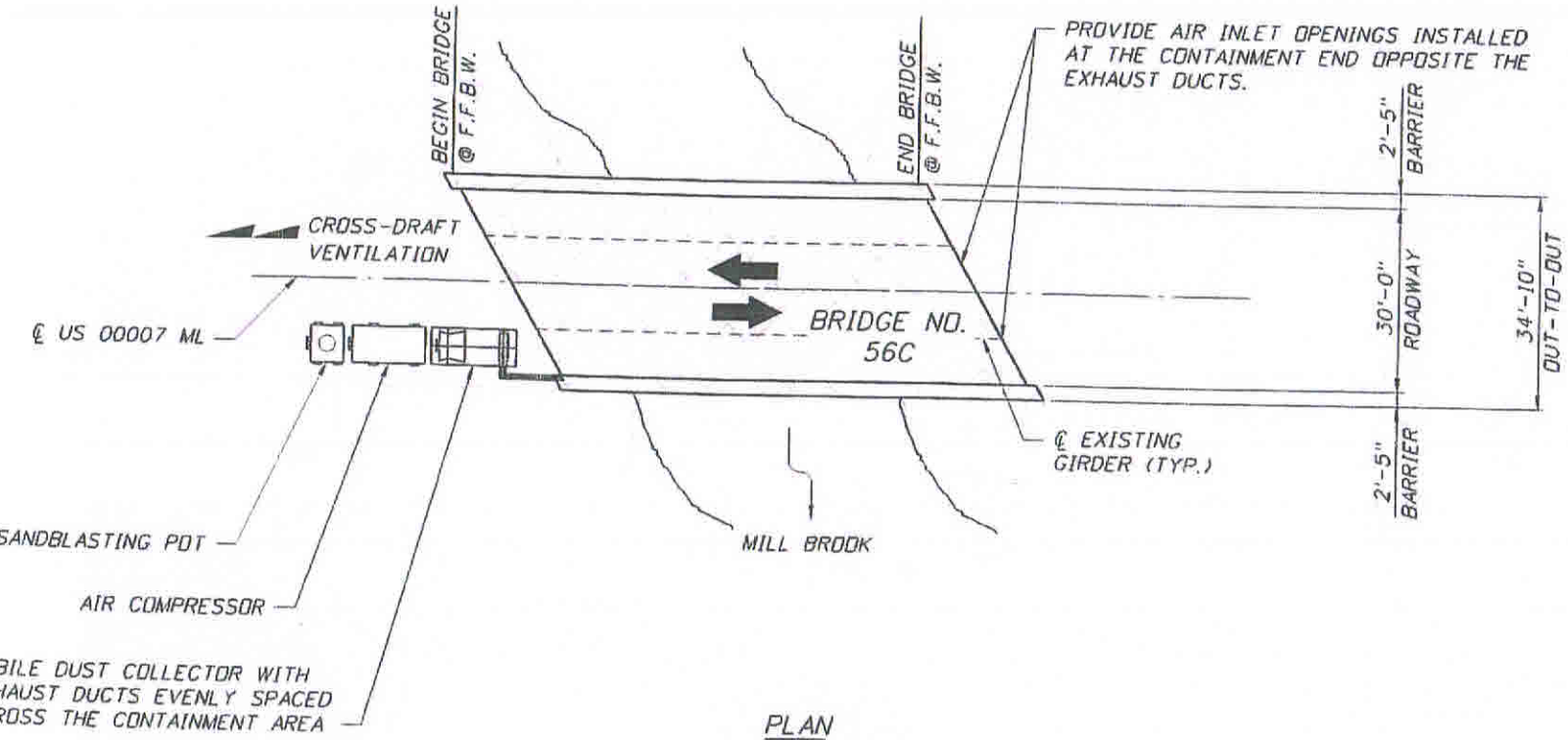

PLAN

(PHASE I SHOWN)

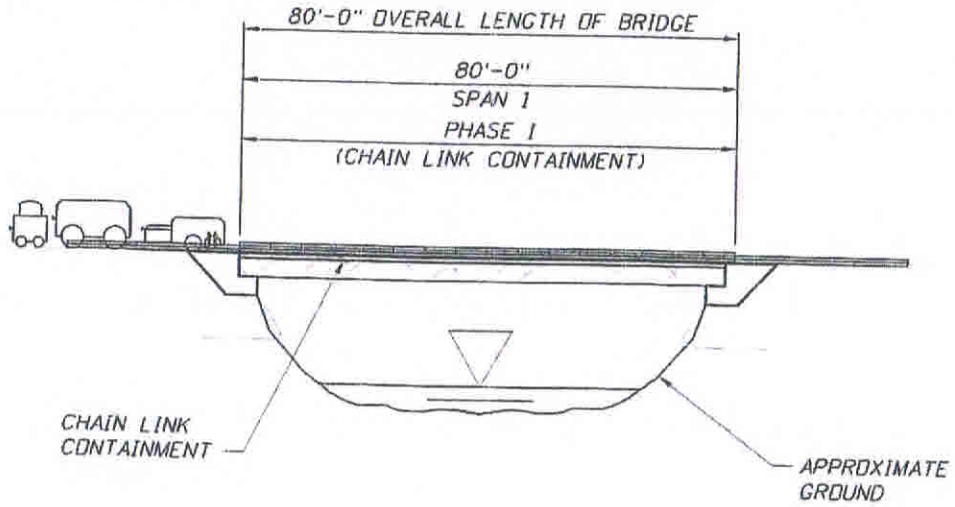

ELEVATION

(PHASE I SHOWN)

NOTES:

1. THESE PLANS WERE PREPARED WITHOUT THE BENEFIT OF AS-BUILT BRIDGE PLANS. THE CONTRACTOR SHALL MAKE ALLOWANCE FOR BRIDGE ELEMENTS AND MODIFICATIONS NOT SHOWN ON THESE PLANS.
2. WORK PHASE I SHOWN SCHEMATICALLY. REFERENCE MDT PLANS FOR LIMITS OF WORK PHASES.
3. WORK PHASE I MAY BE WORKED IN ANY ORDER AT THE CONVENIENCE OF THE CONTRACTOR'S MEANS AND METHODS, TRAFFIC PATTERNS AND DENSITY, OR OTHER SITE CHARACTERISTICS THAT INFLUENCE A PREFERRED WORK AREA.
4. THE CONTRACTOR HAS THE OPTION TO USE ADDITIONAL MOBILE DUST COLLECTORS, OR PLACE LONGITUDINAL OR TRANSVERSE INTERMEDIATE TARPAULIN WALLS.
5. FOR ADDITIONAL DETAILS, SEE CONTAINMENT MISCELLANEOUS DETAILS SHEETS.

STATE OF VERMONT
PAUL R. STEIJLEN
NO. 10795
CIVIL
12-16-15
LICENSED
PROFESSIONAL ENGINEER

Bridge No. 56C

REVISIONS		
DATE	BY	DESCRIPTION

PAUL STEIJLEN P.E.
P.E. LICENSE NUMBER 107795
A2B ENGINEERING, LLC.
5406 N. HOOVER BLVD., SUITE 12
TAMPA, FL 33634

MONOKO, LLC.
1037 PENINSULA AVENUE
TARPON SPRINGS, FL 34689
PHONE (727) 940-3244
FAX (727) 279-8795

DRAWN BY:	BDN 11/15
CHECKED BY:	PDB 11/15
DESIGNED BY:	MAT 11/15
CHECKED BY:	PRS 11/15

VERMONT AGENCY OF TRANSPORTATION

ROAD NO.	COUNTY	PROJECT ID
	RUTLAND	BF BPNT (16)

SHEET TITLE: PLAN & ELEVATION

PROJECT NAME: FIVE BRIDGES ON OR OVER US ROUTE 7

REF. DWG. NO.:

SHEET NO.: C-12

P:\187 Monoko, LLC\17 Bennington-Mt. Tabor\1 Containment Plans\Cadd\B5PlanElev.dgn

Cad12

12/16/2015 9:47:36 AM

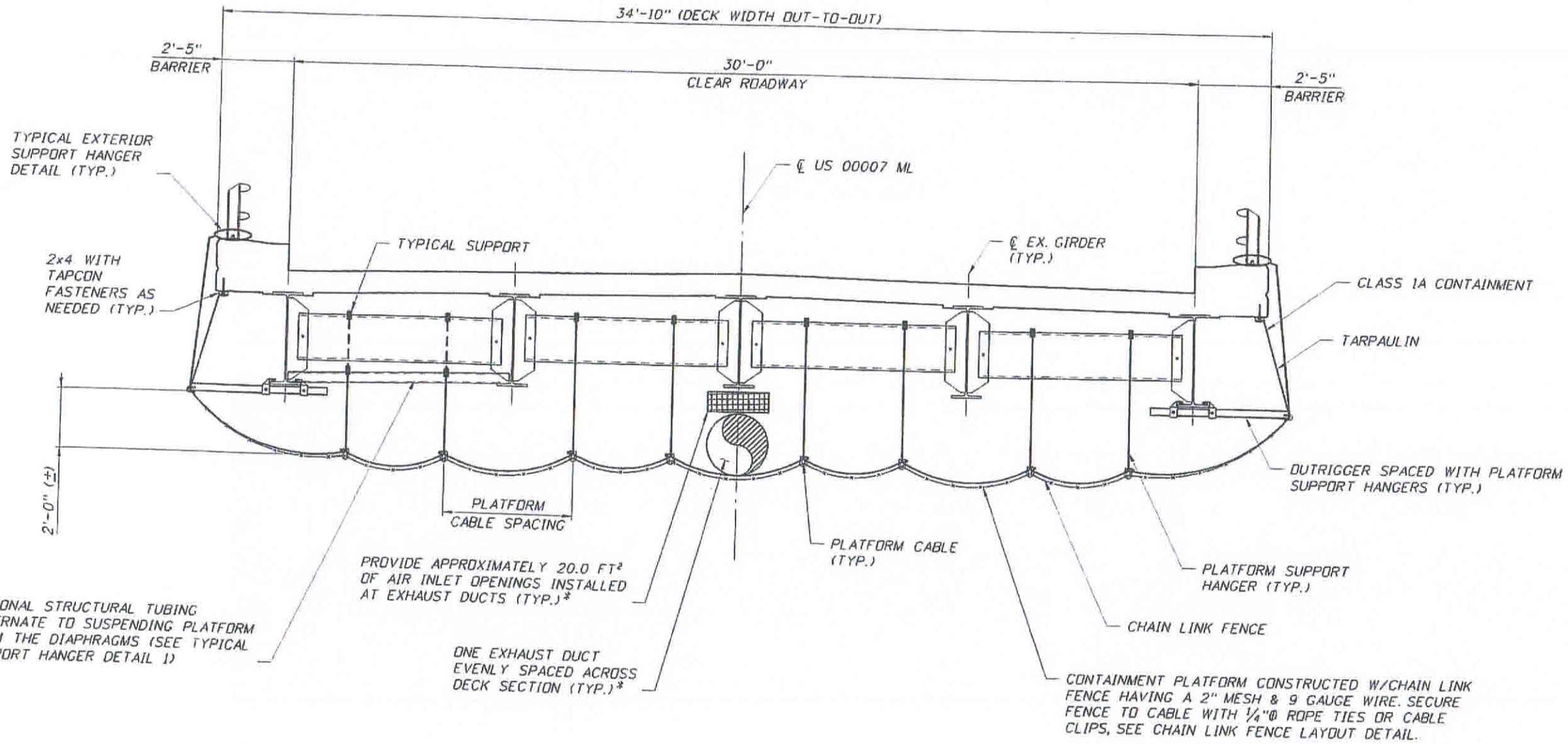

* BASED ON MAXIMUM CONTAINMENT AREA OF 180 FT² AS MEASURED PERPENDICULAR TO THE DIRECTION OF CROSS-DRAFT (SEE VENTILATION SYSTEM TABLE ON GENERAL NOTES SHEETS)

TYPICAL SECTION

(MOBILE DUST COLLECTOR NOT SHOWN FOR CLARITY)

NOTES:

1. THESE PLANS WERE PREPARED WITHOUT THE BENEFIT OF AS-BUILT BRIDGE PLANS. THE CONTRACTOR SHALL MAKE ALLOWANCE FOR BRIDGE ELEMENTS AND MODIFICATIONS NOT SHOWN ON THESE PLANS.
2. THE CONTRACTOR SHALL AVOID ATTACHING/CONNECTING TO BRIDGE ELEMENTS EXHIBITING SIGNIFICANT SECTION LOSS.
3. FOR ADDITIONAL DETAILS, SEE CONTAINMENT MISCELLANEOUS DETAILS SHEETS.
4. CONTRACTOR TO PROVIDE LIFE LINES MEETING OSHA 1910.66 APPENDIX C AS REQUIRED.

STATE OF VERMONT
PAUL R. STEIJLEN
NO. 107795
LICENSED
PROFESSIONAL ENGINEER

Bridge No. 56C

REVISIONS		
DATE	BY	DESCRIPTION

PAUL STEIJLEN P.E.
P.E. LICENSE NUMBER 107795
A2B ENGINEERING, LLC.
5406 N. HOOVER BLVD., SUITE 12
TAMPA, FL 33634

MONOKO, LLC.
1037 PENINSULA AVENUE
TARPON SPRINGS, FL 34689
PHONE (727) 940-3244
FAX (727) 279-8795

DRAWN BY:	BDN 11/15
CHECKED BY:	PDB 11/15
DESIGNED BY:	MAT 11/15
CHECKED BY:	PRS 11/15

VERMONT AGENCY OF TRANSPORTATION

ROAD NO.	COUNTY	PROJECT ID
	RUTLAND	BF BPNT (16)

SHEET TITLE: CONTAINMENT SECTION DETAILS
REF. DWG NO.:
PROJECT NAME: FIVE BRIDGES ON OR OVER US ROUTE 7
SHEET NO.: C-13

P:\187 Monoko, LLC\17 Bennington-Mt. Tabor\1 Containment Plans\Cadd\B5Typical01.dgn
Cad12
12/16/2015 9:47:39 AM

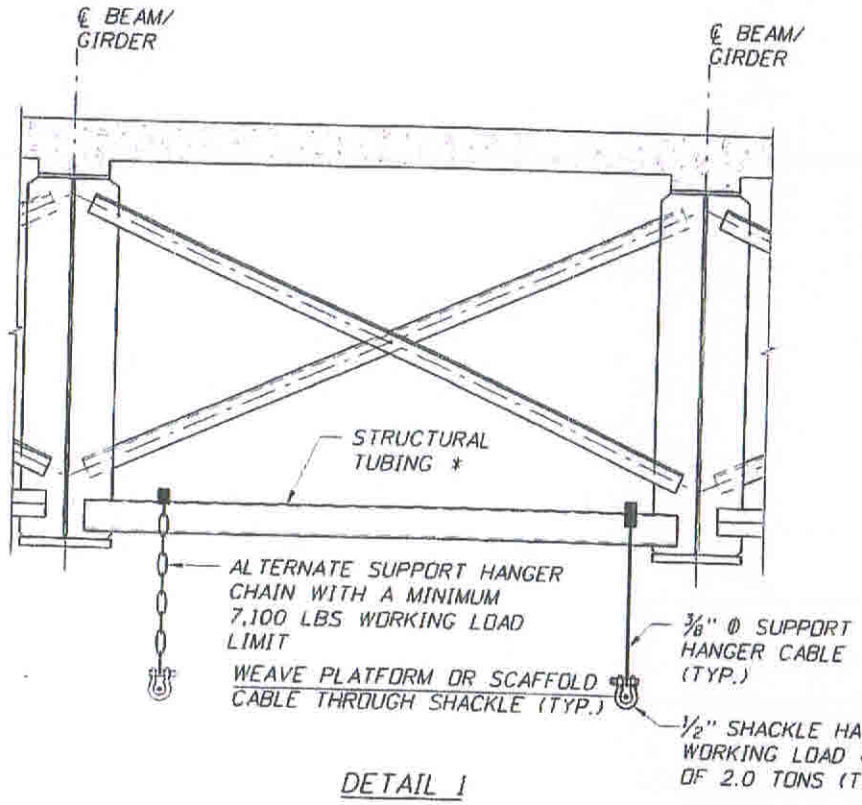

DETAIL 1

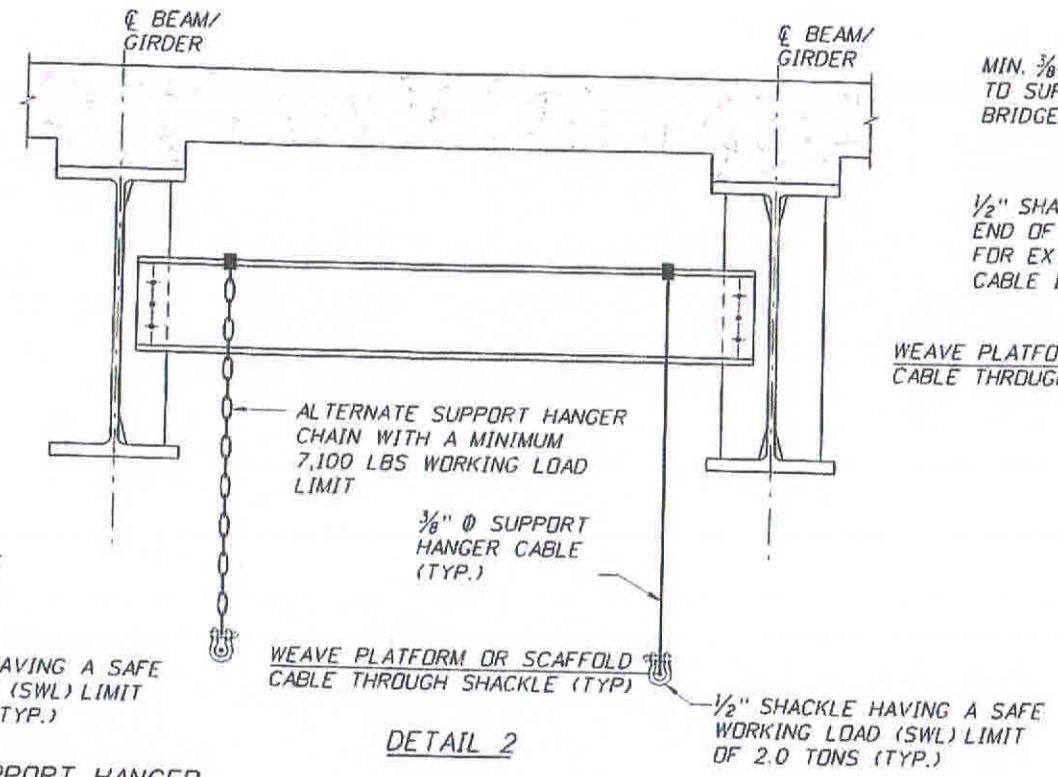

DETAIL 2

TYPICAL SUPPORT HANGER

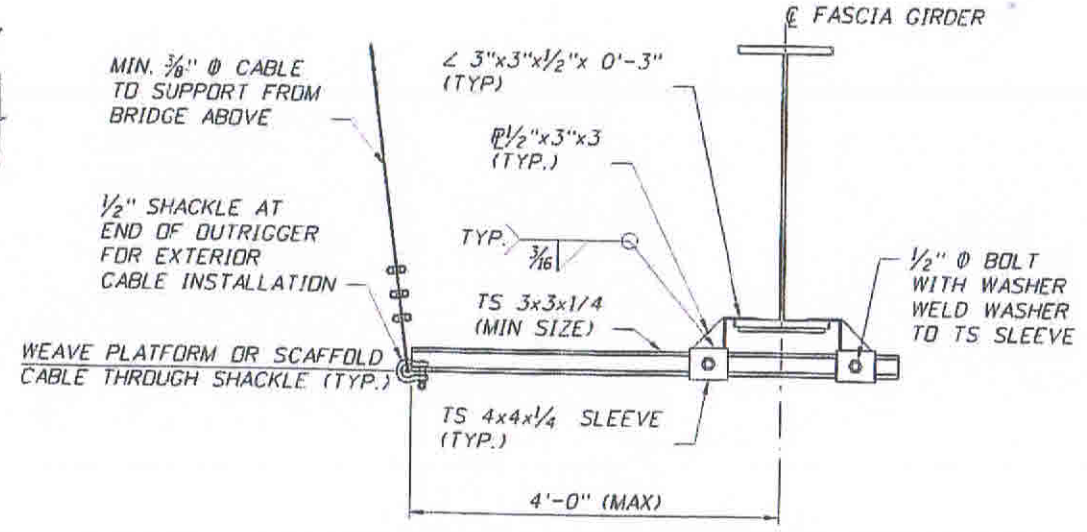

TYPICAL OUTRIGGER DETAIL

* USE TS 4X4X1/4 FOR SPACING UP TO 9'-6" OR TS 4X4X3/8 FOR SPACING UP TO 11'-0"

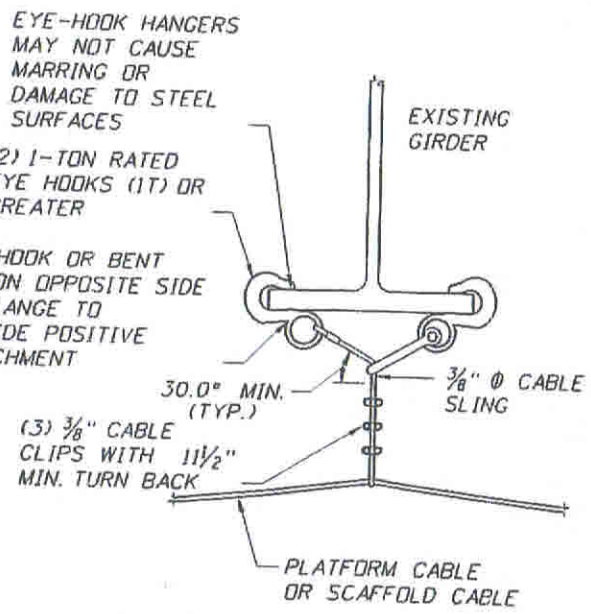

ALTERNATE SUPPORT HANGER

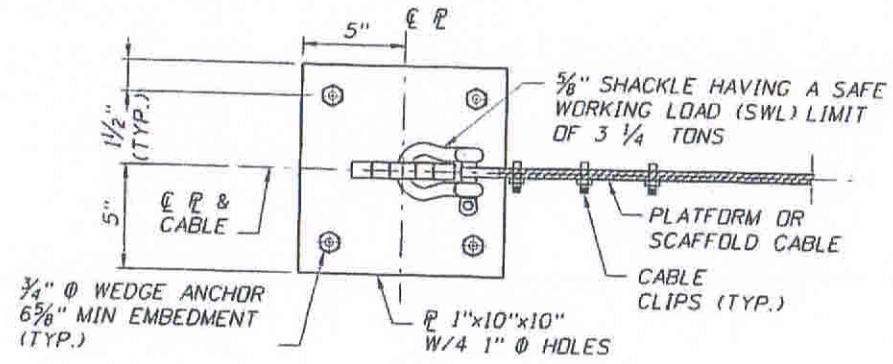

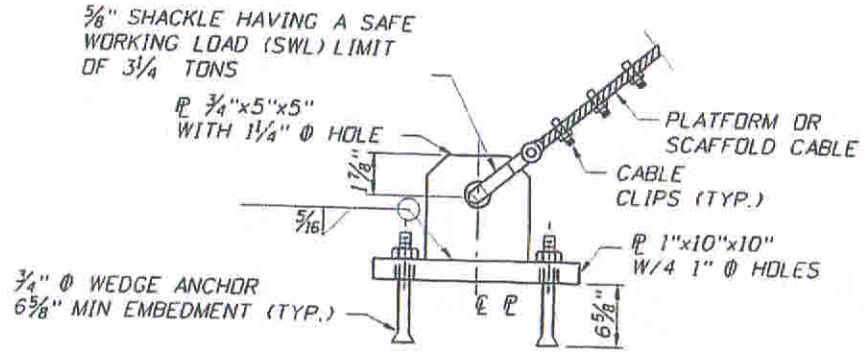

OPTIONAL ANCHOR PLATE ATTACHMENT

GENERAL NOTES:

1. OBTAIN APPROVAL FROM OWNER OR THE RESIDENT ENGINEER PRIOR TO INSTALLATION OF THE ANCHOR PLATE. CONSULT WITH RESIDENT ENGINEER REGARDING ANY ENCASED CONDUITS, PIPES, OR ANY OTHER KNOWN OBSTRUCTIONS PRIOR TO DRILLING.
2. STRUCTURAL STEEL SHALL CONFORM TO ASTM A36.
3. WELD ELECTRODES SHALL BE E70XX.
4. TO RESTORE CONCRETE:
   - REMOVE ANCHORS COMPLETELY WITHOUT DAMAGING THE CONCRETE ELEMENT.
   - FINISH SURFACE WITH DOT APPROVED METHODS AND NON-SHRINK GROUT.
5. MINIMUM 8" EDGE DISTANCE AND 6" CENTER TO CENTER OF BOLTS IS REQUIRED.
6. CONTRACTOR SHALL ATTACH THE ANCHOR PLATES TO SOUND CONCRETE. CONCRETE THAT IS SPALLED SHALL NOT BE CONSIDERED AS SOUND. CONCRETE WITH MAP CRACKS AND EFFLORESCENCE SHOULD HAVE PULL OUT TESTS CONDUCTED ON ALL ANCHOR BOLTS TO ENSURE THAT THE PROPER CAPACITY CAN BE ACHIEVED.
7. ANCHOR PLATE SHALL NOT BE ATTACHED TO PRESTRESSED PILES OR BEAMS.

INSTALLATION NOTES:

1. DRILL (4) HOLES, USING THE MANUFACTURER'S RECOMMENDED DRILL BIT SIZE, INTO CONCRETE USING ANCHOR PLATE AS A TEMPLATE. (HOLES FOR ANCHOR BOLTS SHALL BE DRILLED ¼" MINIMUM DEEPER THAN THE MINIMUM EMBEDMENT LENGTH FOR ALL ANCHOR BOLTS.)
2. INSTALL ANCHOR BOLTS PER MANUFACTURER'S INSTRUCTIONS.
3. INSTALL ⅝" SHACKLE (OR GREATER) ONTO THE ANCHOR PLATE.
4. INSTALL MAIN CABLE ONTO SHACKLE.

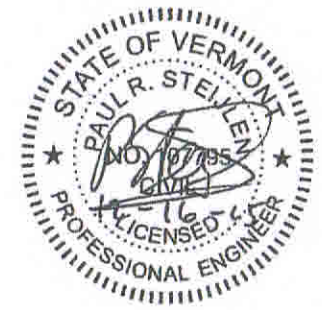

Bridge Nos. All

REVISIONS		
DATE	BY	DESCRIPTION

PAUL STEIJLEN P.E.
P.E. LICENSE NUMBER 107795
A2B ENGINEERING, LLC.
5406 N. HOOVER BLVD., SUITE 12
TAMPA, FL 33634

MONOKO, LLC.
1037 PENINSULA AVENUE
TARPON SPRINGS, FL 34689
PHONE (727) 940-3244
FAX (727) 279-8795

DRAWN BY:	BDN 11/15
CHECKED BY:	PDB 11/15
DESIGNED BY:	MAT 11/15
CHECKED BY:	PRS 11/15

VERMONT AGENCY OF TRANSPORTATION

ROAD NO.	COUNTY	PROJECT ID
	BENNINGTON RUTLAND	BF BPNT (16)

SHEET TITLE: CONTAINMENT MISCELLANEOUS DETAILS (1 OF 4)

REF. DWG. NO.:

PROJECT NAME: FIVE BRIDGES ON OR OVER US ROUTE 7

SHEET NO.: C-14

P:\187 Monoko, LLC\17 Bennington-Mt. Tabor\T Containment Plans\Cadd\80Details01.dgn

Cad12

12/16/2015 9:47:02 AM

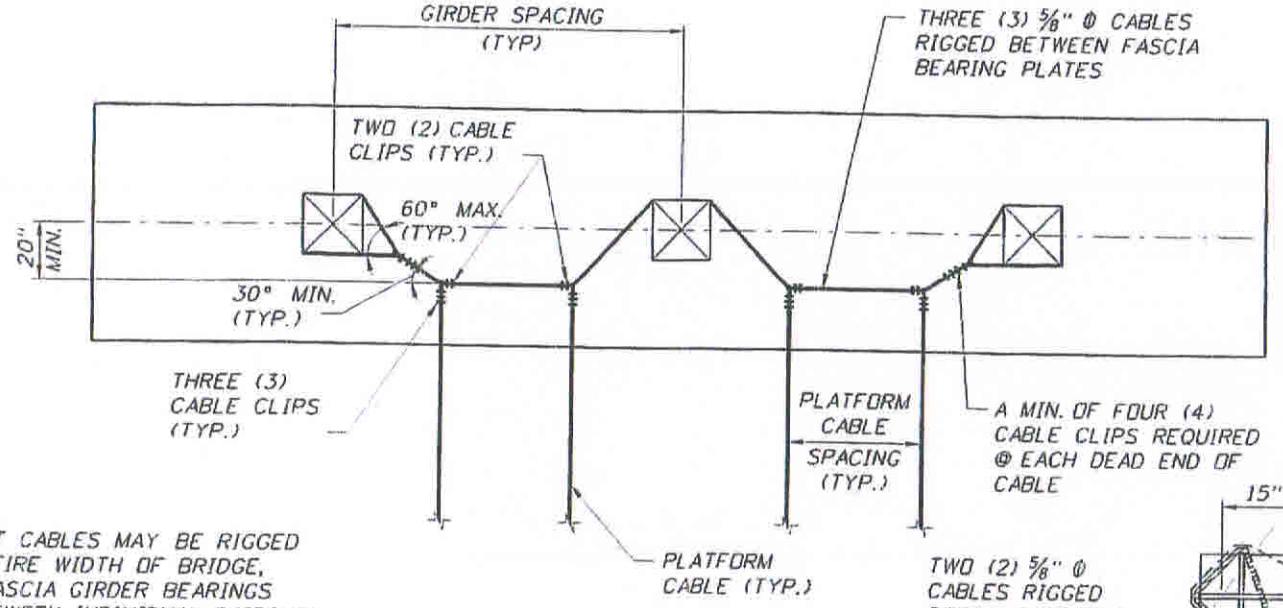

NOTE:

ATTACHMENT CABLES MAY BE RIGGED ACROSS ENTIRE WIDTH OF BRIDGE, BETWEEN FASCIA GIRDER BEARINGS AND/OR BETWEEN INDIVIDUAL PAIRS OF BEARINGS.

TRANSVERSE CABLE ATTACHMENT

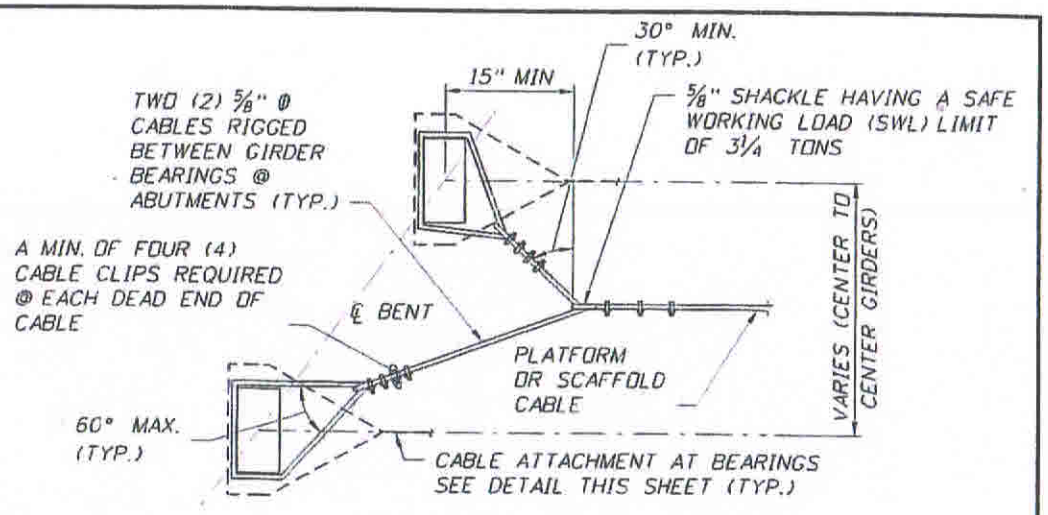

MID BAY CABLE ATTACHMENTS

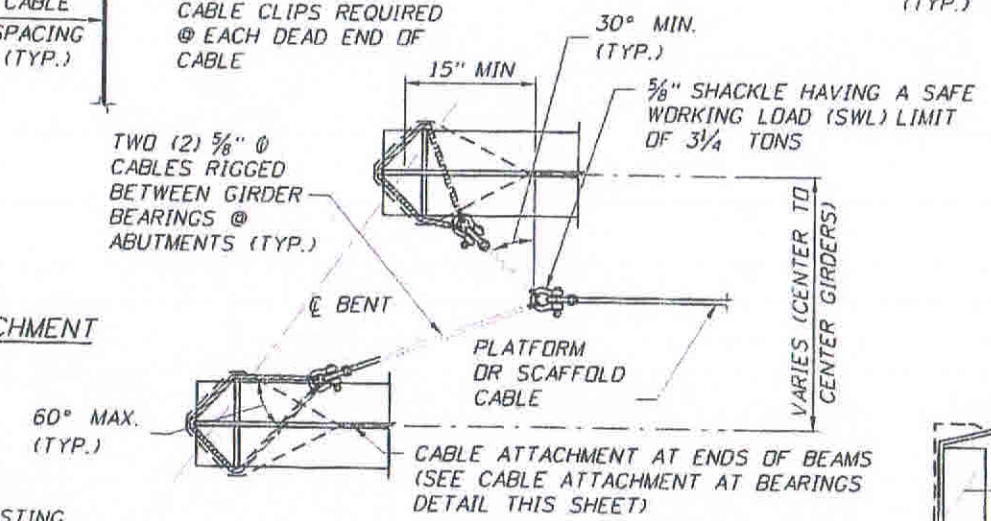

MID BAY CABLE ATTACHMENTS

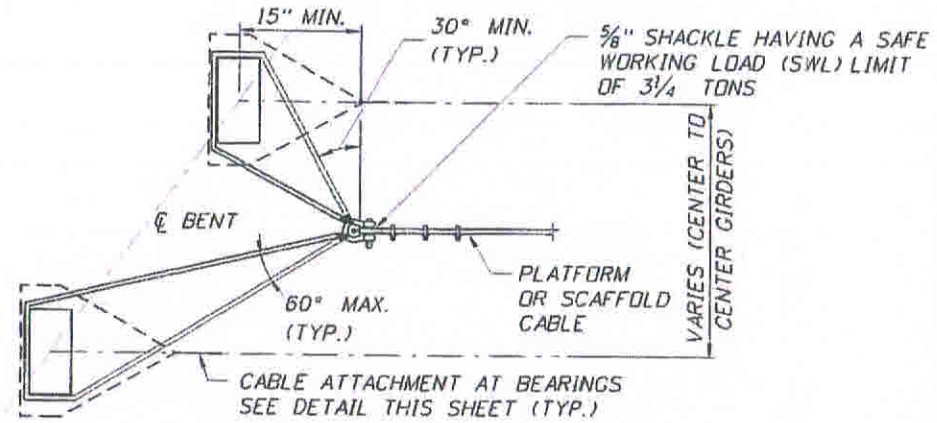

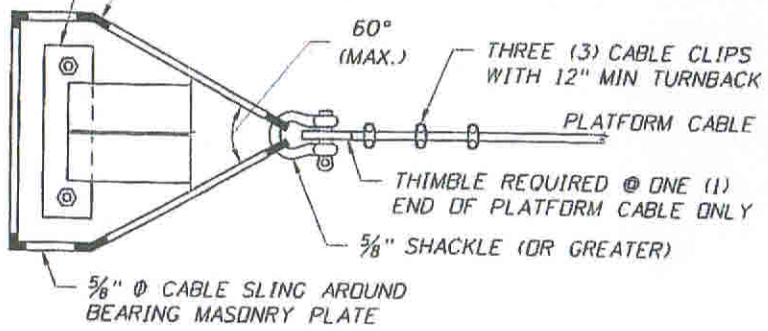

PLAN VIEW

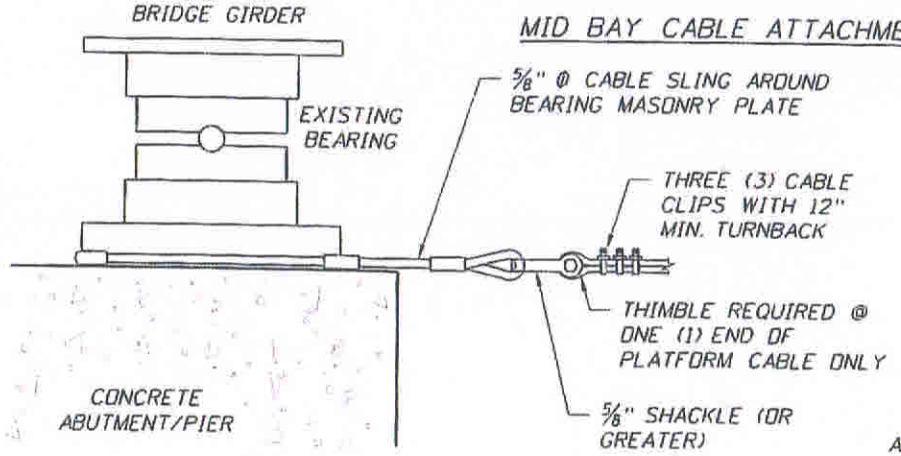

ELEVATION

CABLE ATTACHMENT AT BEARINGS

* SANDBLASTING POT SHALL BE CENTERED OVER PIER. IF EQUIPMENT EXCEEDS LEGAL LOAD LIMITS WHEN FULL, EQUIPMENT SHALL BE USED PARTIALLY FULL ONLY AS REQUIRED TO STAY WITHIN LEGAL LOAD LIMITS. ANY LOAD THAT EXEEDS LEGAL LOAD LIMIT SHALL BE SUBMITTED TO THE DEPARTMENT FOR REVIEW AND APPROVAL.

MID BAY CABLE ATTACHMENTS ALTERNATE

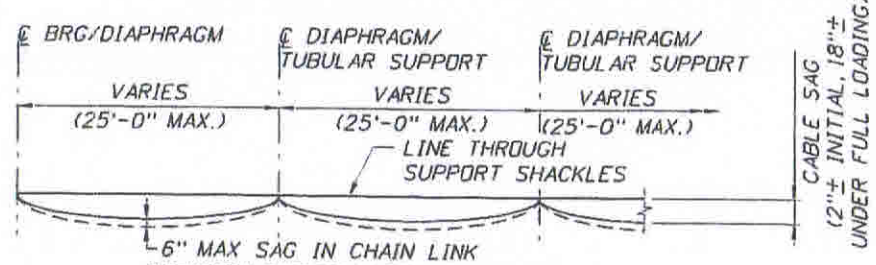

DESIGN CABLE SAG

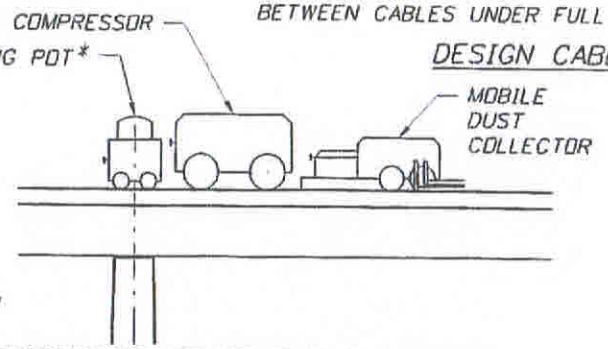

CONTRACTOR EQUIPMENT ON BRIDGE

(SCHEMATIC)

STATE OF VERMONT PAUL R. STEIJLEN NO. 107795 CIVIL LICENSED PROFESSIONAL ENGINEER

Bridge Nos. All

REVISIONS		
DATE	BY	DESCRIPTION

PAUL STEIJLEN P.E.
P.E. LICENSE NUMBER 107795
A2B ENGINEERING, LLC.
5406 N. HOOVER BLVD., SUITE 12
TAMPA, FL 33634

MONOKO, LLC.
1037 PENINSULA AVENUE
TARPON SPRINGS, FL 34689
PHONE (727) 940-3244
FAX (727) 279-8795

DRAWN BY:	BDN 11/15
CHECKED BY:	PDB 11/15
DESIGNED BY:	MAT 11/15
CHECKED BY:	PRS 11/15

VERMONT AGENCY OF TRANSPORTATION

ROAD NO.	COUNTY	PROJECT ID
	BENNINGTON RUTLAND	BF BPNT (16)

SHEET TITLE: CONTAINMENT MISCELLANEOUS DETAILS (2 OF 4)

REF. DWG NO.:

PROJECT NAME: FIVE BRIDGES ON OR OVER US ROUTE 7

SHEET NO.: C-15

P:\187 Monoko, LLC\17 Bennington-Rt. Tabor\1 Containment Plans\Cadd\BODetails01.dgn

Cad12

12/16/2015 9:47:02 AM

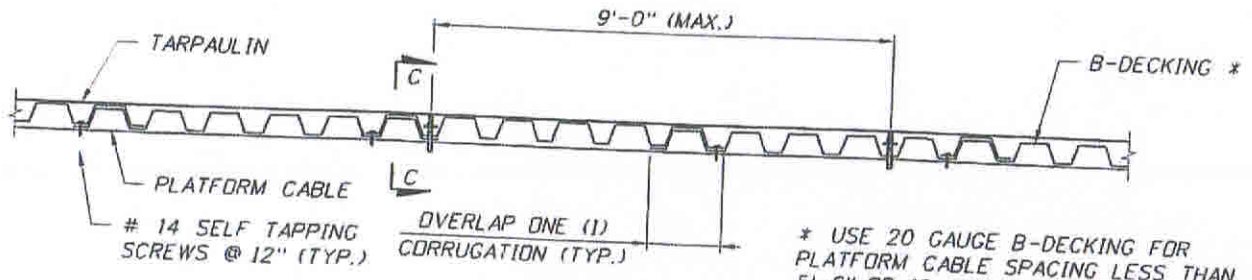

METAL DECKING DETAIL

(100% TIE-OFF PER OSHA REQUIRED AT ENDS OF METAL DECKING)

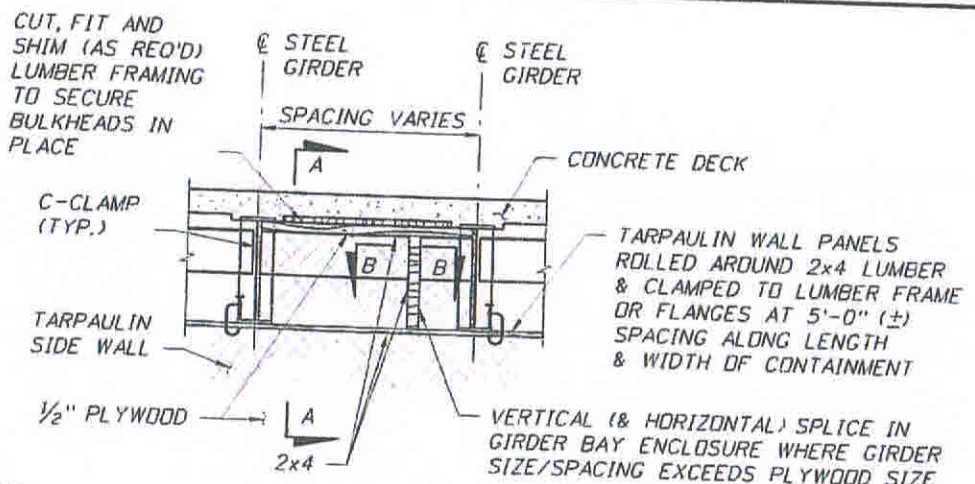

GIRDER BAY ENCLOSURE

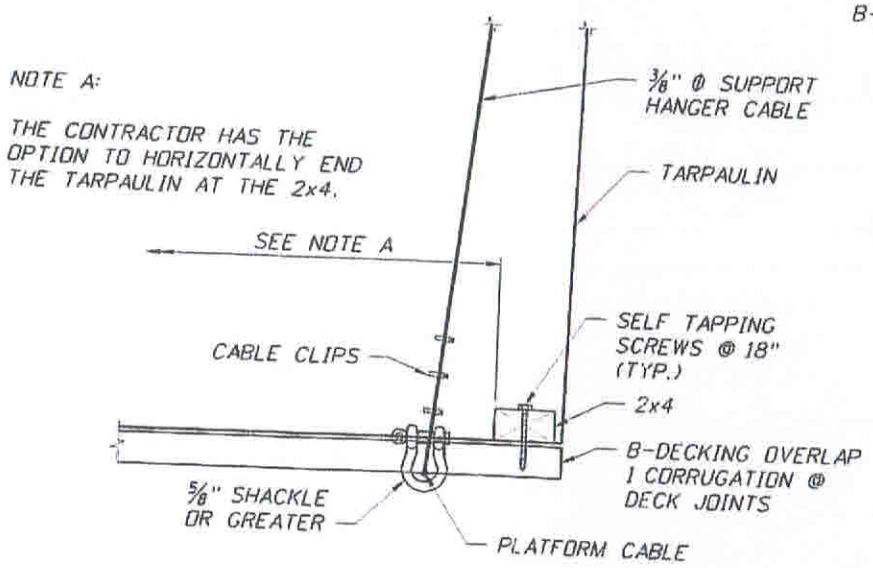

METAL DECKING END DETAIL

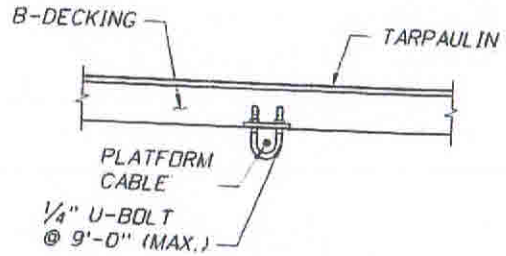

SECTION C-C

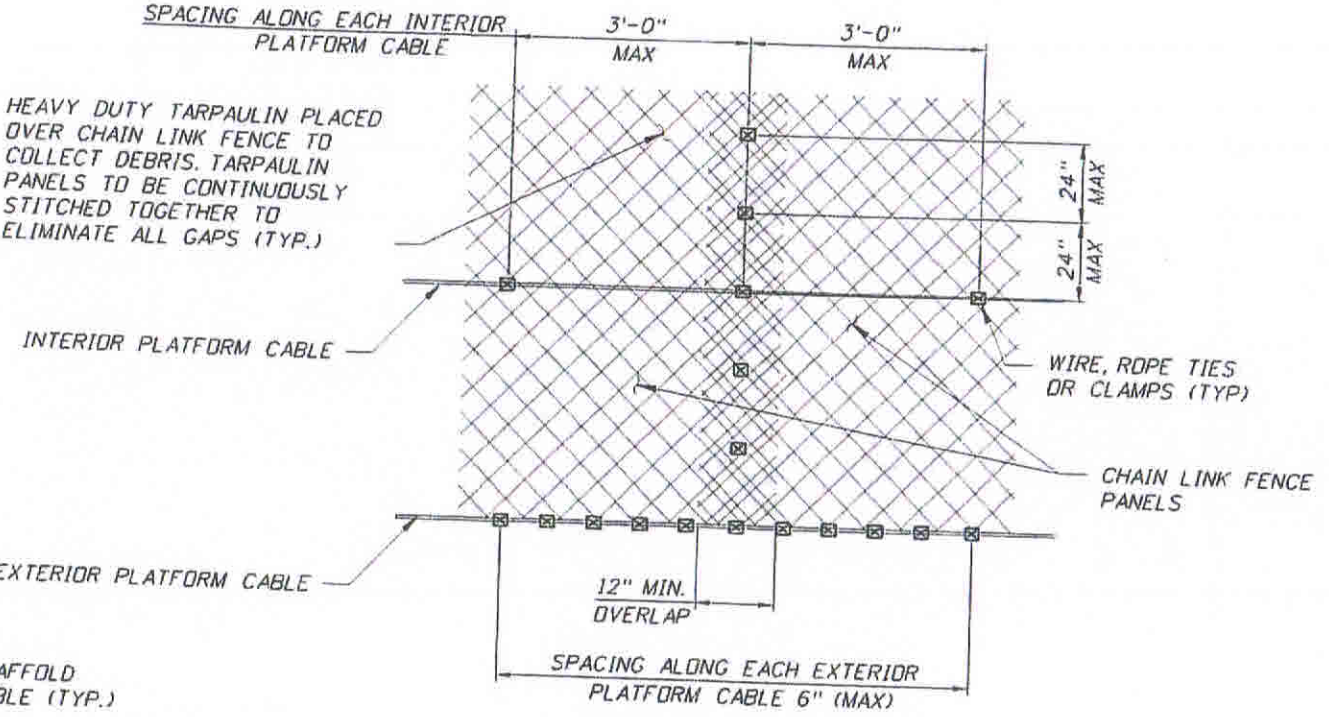

CHAIN LINK FENCE LAYOUT

CABLE CLIP INSTALLATION			
CABLE DIA	MIN. CABLE TURNBACK, IN.	MIN. TORQUE FT-LBS	NO. OF CLIPS
⅜"	11"	45	3
½"	11.5"	65	3
9/16"	12"	95	3
⅝"	12"	95	3

NOTE:

ALL CABLES & CLIPS SHALL BE INSTALLED IN ACCORDANCE WITH THE MANUFACTURER'S RECOMMENDED PROCEDURES. IF CABLES SEPARATE AT 60° MAX. ANGLE, ADD ONE ADDITIONAL CLIP.

SCAFFOLD ISOMETRIC

(OPTIONAL SUSPENDED SCAFFOLD)

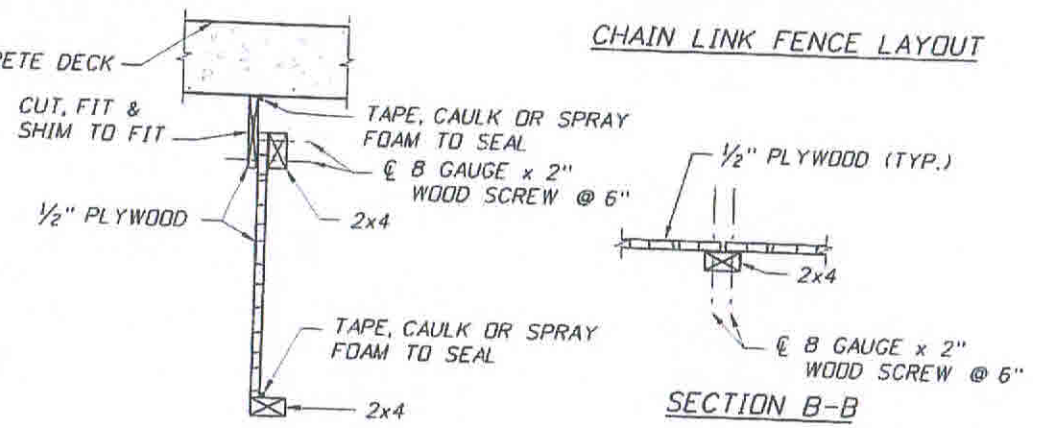

SECTION A-A

SECTION B-B

PAUL R. STEIJLEN
NO. 107795
CIVIL
12-16-15
LICENSED
PROFESSIONAL ENGINEER
STATE OF VERMONT

Bridge Nos. All

REVISIONS		
DATE	BY	DESCRIPTION

PAUL STEIJLEN P.E.
P.E. LICENSE NUMBER 107795
A2B ENGINEERING, LLC.
5406 N. HOOVER BLVD., SUITE 12
TAMPA, FL 33634

MONOKO, LLC.
1037 PENINSULA AVENUE
TARPON SPRINGS, FL 34689
PHONE (727) 940-3244
FAX (727) 279-8795

DRAWN BY:	BDN 11/15
CHECKED BY:	PDB 11/15
DESIGNED BY:	MAT 11/15
CHECKED BY:	PRS 11/15

VERMONT AGENCY OF TRANSPORTATION

ROAD NO.	COUNTY	PROJECT ID
	BENNINGTON	BF BPNT (16)
	RUTLAND	

SHEET TITLE: CONTAINMENT MISCELLANEOUS DETAILS (3 OF 4)

REF. DWG. NO.

PROJECT NAME: FIVE BRIDGES ON OR OVER US ROUTE 7

SHEET NO. C-16

P:\187 Monoko, LLC\17 Bennington-Mt. Tabor\1 Containment Plans\Cadd\BDDetails01.dgn

Cad12

12/16/2015 9:47:02 AM

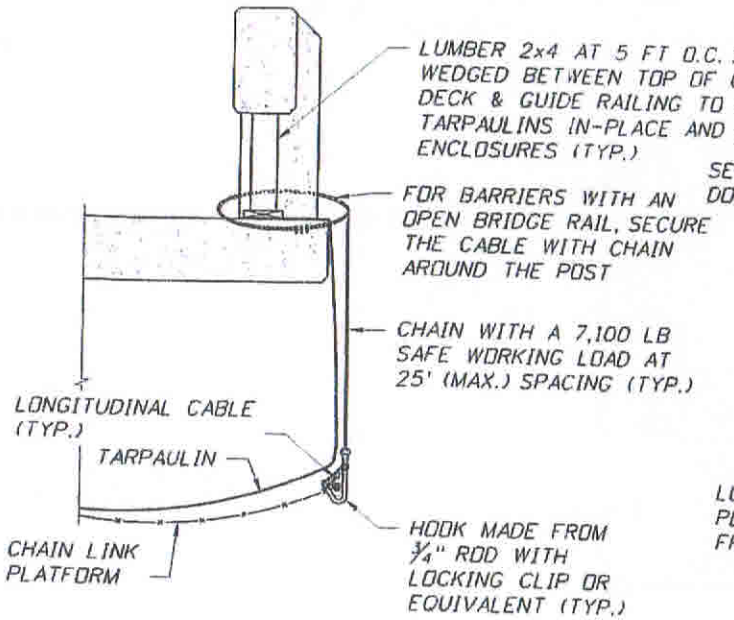

EXTERIOR SUPPORT HANGER

(CHAIN LINK PLATFORM SHOWN, NETTING OR METAL DECKING IS SIMILAR)

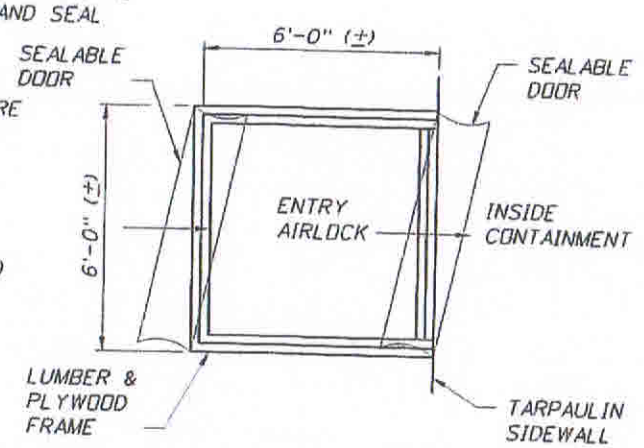

CONTAINMENT ENTRY

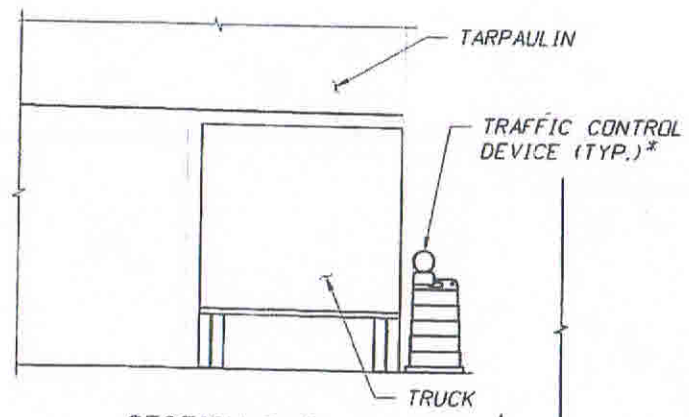

SECTION C-C

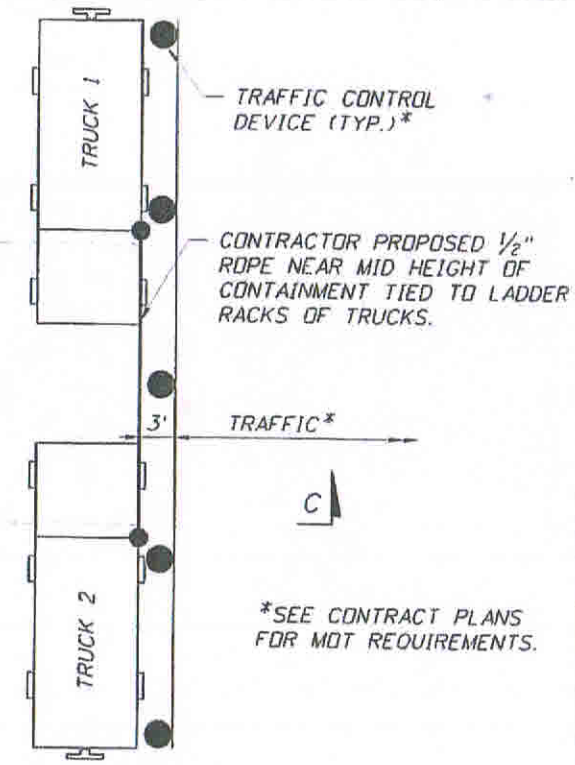

PLAN

(SUPPLEMENTAL TARPAULIN SUPPORT ADJACENT TO TRAFFIC)

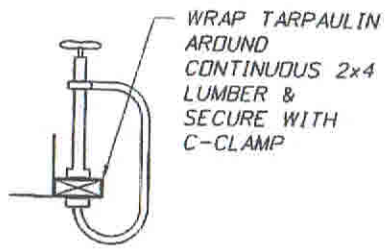

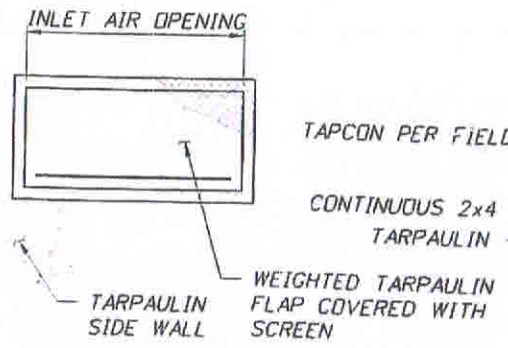

INLET AIR OPENING

INSTALL INLET AIR OPENINGS WITHIN TARPAULIN WALLS AND/OR GIRDER BAY ENCLOSURES AS REQUIRED

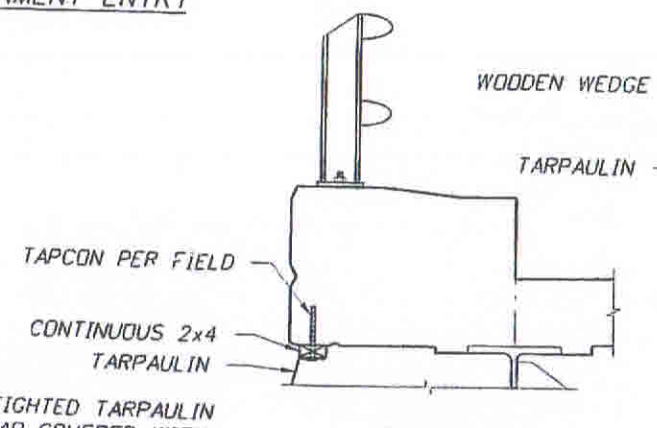

DETAIL 1

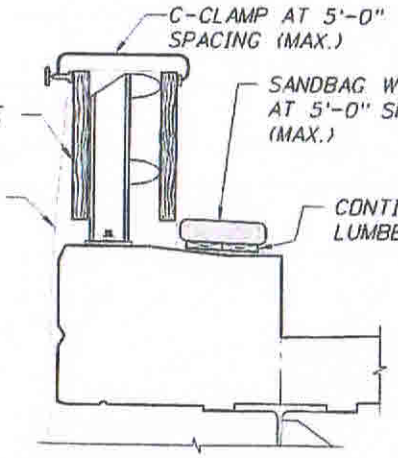

DETAIL 2

TARPAULIN PARAPET CONNECTION

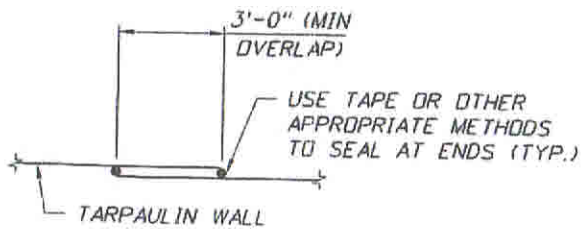

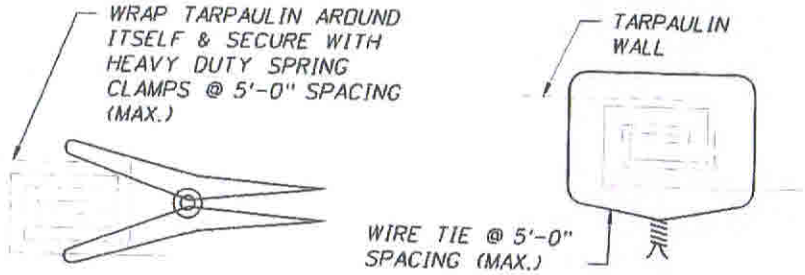

ADJACENT TARPAULIN CONNECTION ALTERNATIVES

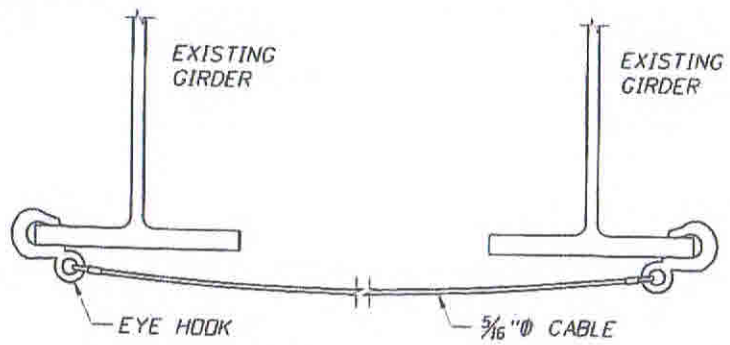

BETWEEN BEAMS

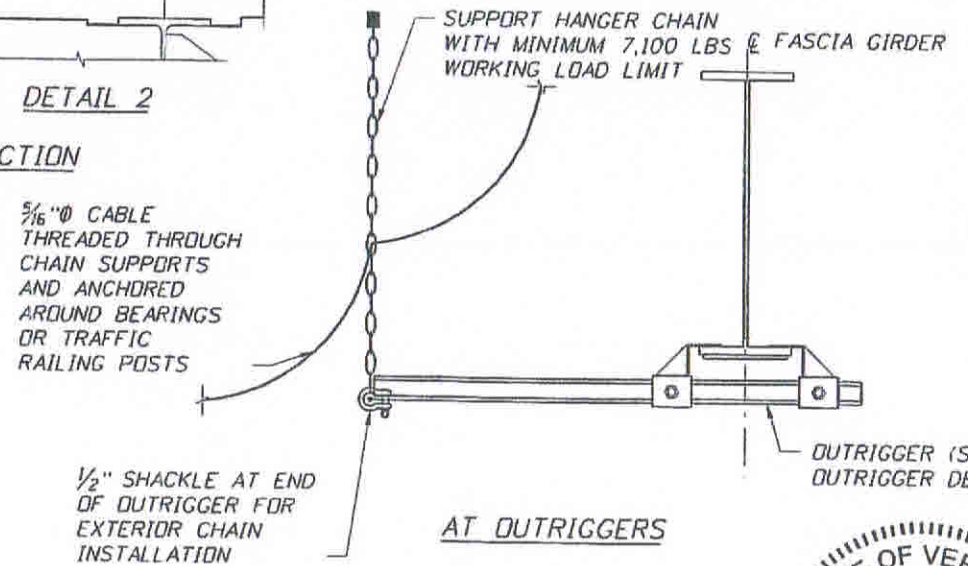

AT OUTRIGGERS

HORIZONTAL LIFE LINE DETAIL

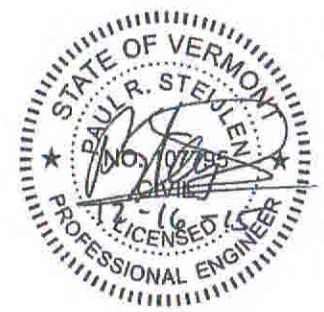

Bridge Nos. All

REVISIONS			PAUL STEIJLEN P.E.	MONOKO, LLC.	DRAWN BY: BDN 11/15	VERMONT AGENCY OF TRANSPORTATION			SHEET TITLE: CONTAINMENT MISCELLANEOUS DETAILS (4 OF 4)	REF. DWG. NO.
DATE	BY	DESCRIPTION	P.E. LICENSE NUMBER 107795	1037 PENINSULA AVENUE	CHECKED BY: PDB 11/15	ROAD NO.	COUNTY	PROJECT ID		
			A2B ENGINEERING, LLC.	TARPON SPRINGS, FL 34689	DESIGNED BY: MAT 11/15		BENNINGTON	BF BPNT (16)	PROJECT NAME: FIVE BRIDGES ON OR OVER US ROUTE 7	SHEET NO. C-17
			5406 W. HOOVER BLVD., SUITE 12	PHONE (727) 940-3244	CHECKED BY: PRS 11/15		RUTLAND			
			TAMPA, FL 33634	FAX (727) 279-8795						

P:\187 Monoko, LLC\17 Bennington-Mt. Tabor\1 Containment Plans\Cadd\BODetails01.dgn

Cad12

12/16/2015 9:47:02 AM