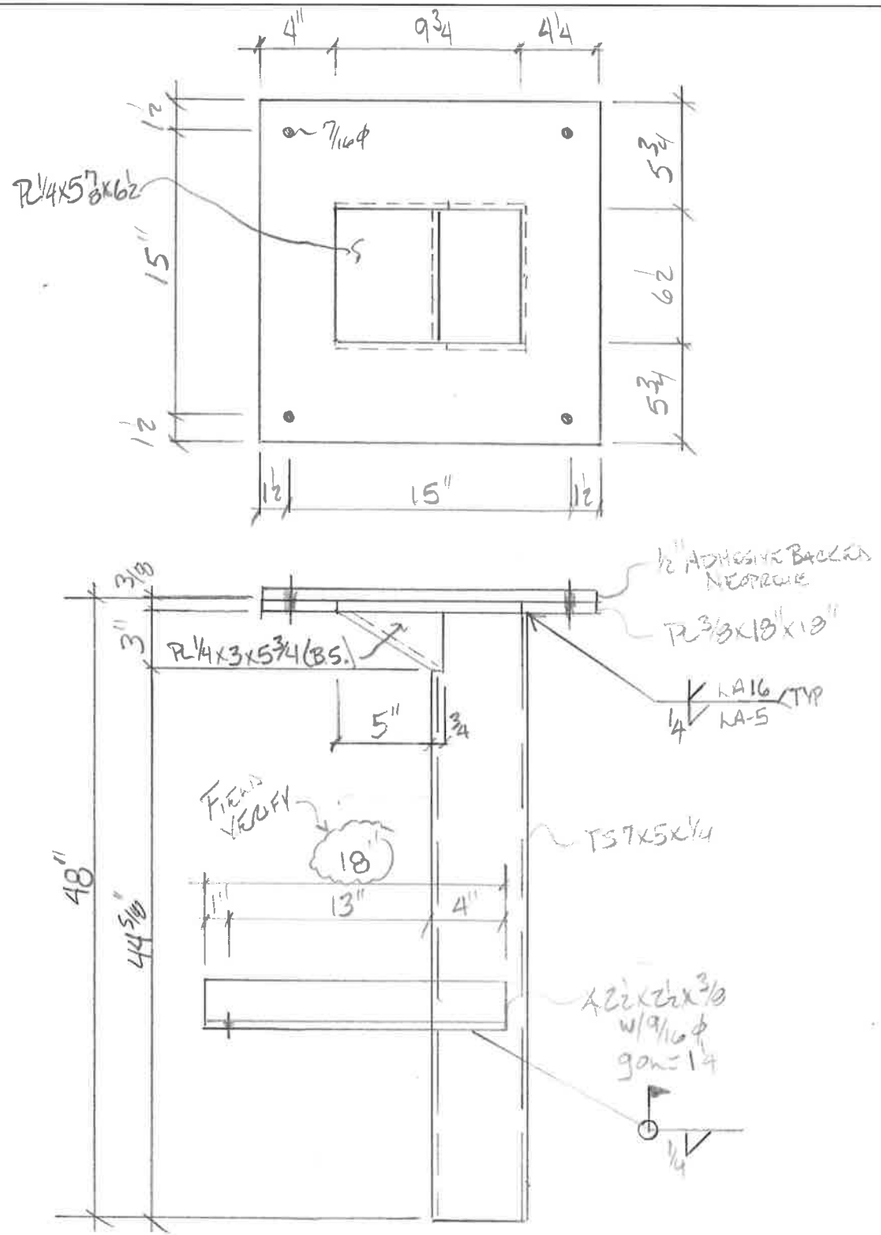

(3) ~ S1 SCUPPERS

PAINT IN FIELD

(12) 3/8 x 3" WELD ANG.

(3) - 1/2" A325 BOLT - GALV

W/NUT, WASHER, LOCKWASHER

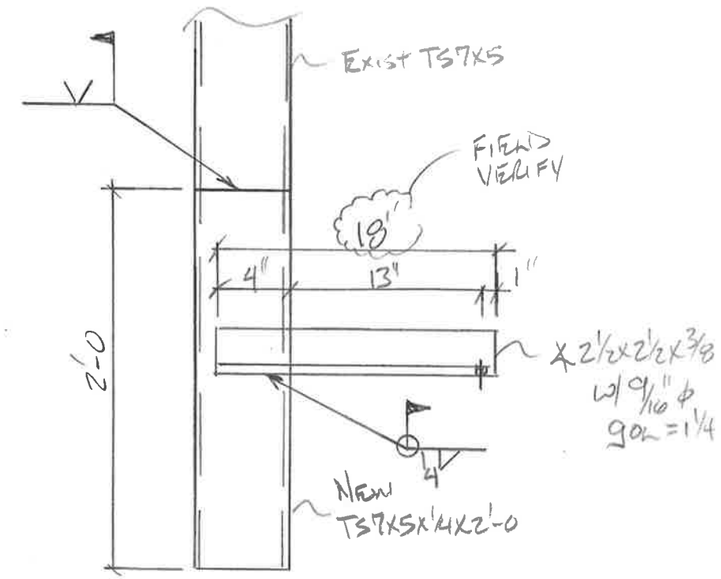

(2) ~ S2 SCUPPER REPAIR

PAINT IN FIELD

(2) ~ 1/2" A325 BOLT - GALV

W/NUT, WASHER, LOCK WASHER

REV. NO.	DATE	DESCRIPTION
HOLES: 13/16"ϕ (U.N.O.)		DATE:
PAINT:		

SCUPPER REPAIR BR. 13W

DATE SUB.	PROJECT	CASTLETON, VT BF BRNT (15)
	LOCATION	
	ARCHITECT	
DATE APP.	ENGINEER	
DATE DIST.	CUSTOMER	MODERN PROTECTIVE COAT.

MERRIMACK

MISCELLANEOUS IRON
STRUCTURAL STEEL
FABRICATORS

MERRIMACK SHEET METAL
119 HALL ST.
CONCORD, N.H., 03301
TEL. (603) 224-7766
FAX. (603) 224-7925

DR BY JD
REV BY RC
JOB NO. 6117
DWG NO. S1

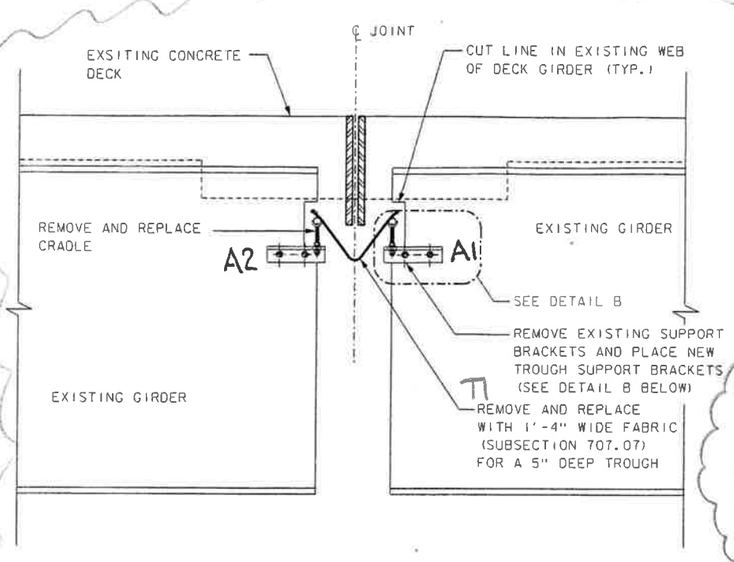

TYPICAL SECTION AT EXISTING DIAPER DRAIN

SCALE: 1" = 1'-0"

SEE ALT. BRACKET DESIGN - T3

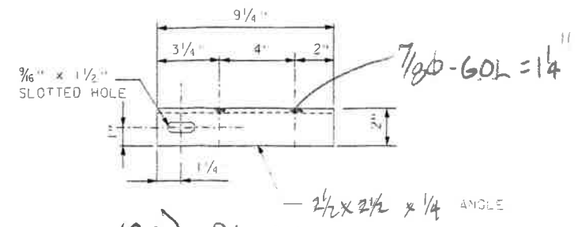

(20) ~ A1 - AS SHOWN

(20) ~ A2 - OPP HAND

(A36 - GALV)

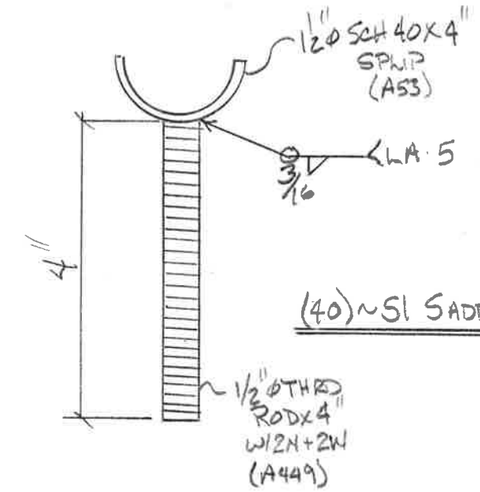

(40) ~ S1 SADDLES

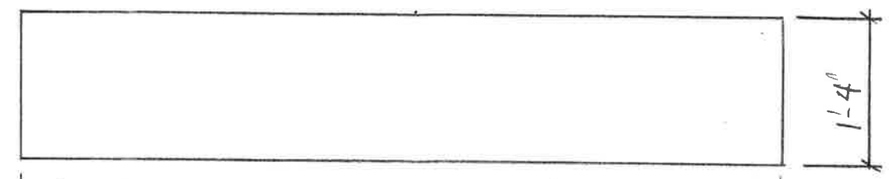

(3) ~ T1	3 PLY FABRIC TROUGH	x 40'-0
(1) ~ T2	3 PLY FABRIC TROUGH	x 47'-0

(TEK SCREW TO P1 @ 12" O.C)

(6) ~ P1	1¼ϕ SCH 40	x 40'-0
(2) ~ P2	1¼ϕ SCH 40	x 47'-0

(A53 - GALV)

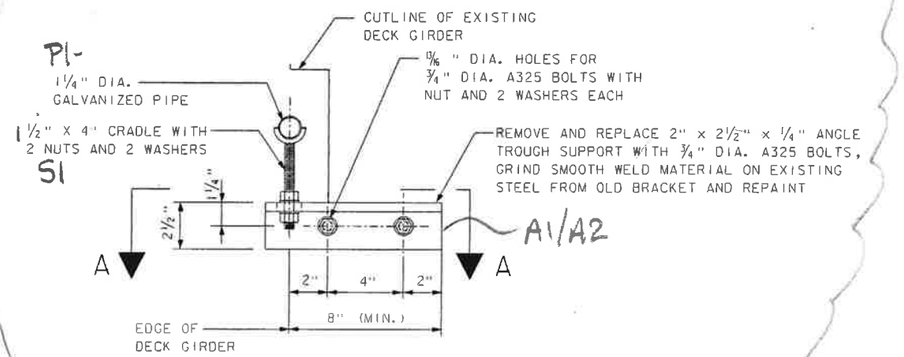

DETAIL B

3" = 1'-0"

DIAPER DRAIN REPAIR DETAILS

FIELD BOLTS

- (80) ~ ¾ x 2" A325 BOLT W/N + W
- (340) ~ #12 TEK SCREW x ¾"

DRAIN TROUGHS

DATE SUB.	PROJECT	CASTLETON BF BPNT (15) BR. #13W
	LOCATION	
	ARCHITECT	
DATE APP.	ENGINEER	
DATE DIST.	CUSTOMER	MODERN PROTECTIVE COATING

REV. NO.	DATE	DESCRIPTION
1	6/14	WRKD

HOLES: 13/16" (U.N.O.) DATE:

PAINT: GALV A123

MERRIMACK

MERRIMACK SHEET METAL
119 HALL ST.
CONCORD, N.H., 03301
TEL. (603) 224-7766
FAX. (603) 224-7925

MISCELLANEOUS IRON STRUCTURAL STEEL FABRICATORS

DR BY JD

REV BY RC

JOB NO. 6117

DWG NO. T2

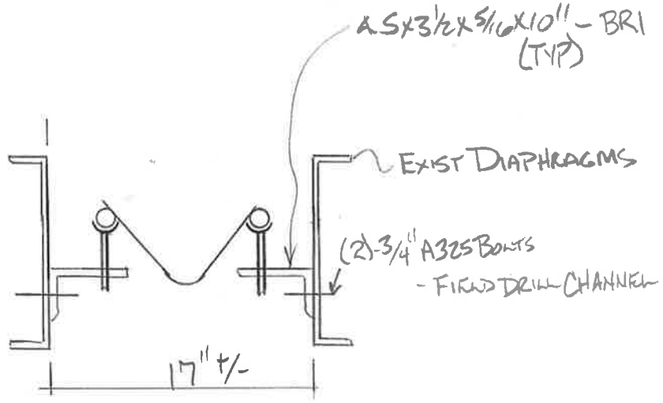

ALT. SADDLE SUPPORTS @ 13W

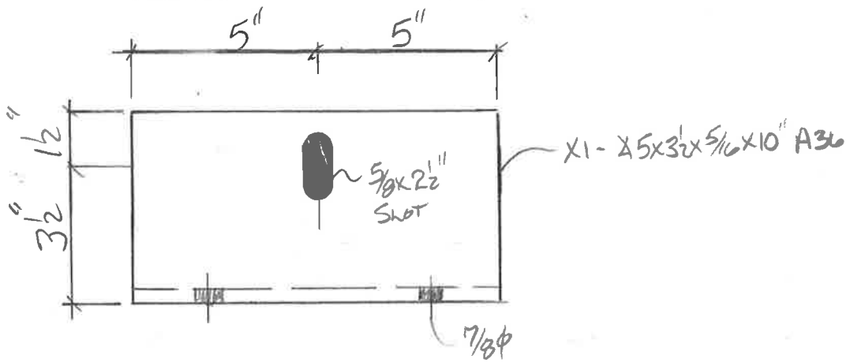

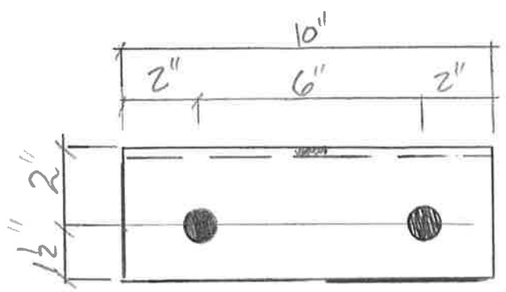

(40) ~ BR1 BRACKETS

GALV

REV. NO.	DATE	DESCRIPTION
HOLES: 13/16"ϕ (U.N.O.)		DATE:
PAINT: GALV		

ALT BRACKETS

DATE SUB.	PROJECT	CASTLETON VT BF BRIDGE
	LOCATION	
	ARCHITECT	
DATE APP.	ENGINEER	
DATE DIST.	CUSTOMER	MODERN PROTECTIVE COAT.

MERRIMACK

MISCELLANEOUS IRON
STRUCTURAL STEEL
FABRICATORS

MERRIMACK SHEET METAL
119 HALL ST.
CONCORD, N.H., 03301
TEL. (603) 224-7766
FAX. (603) 224-7925

DR BY JD
REV BY PC
JOB NO. 6117
DWG NO. T3