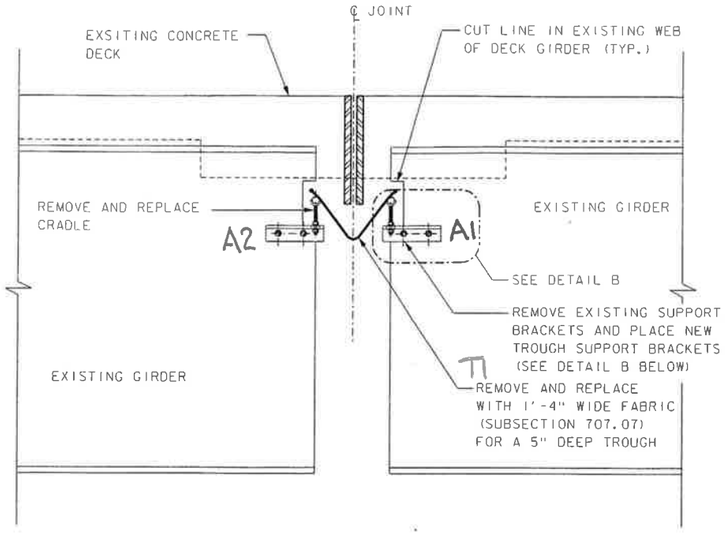

TYPICAL SECTION AT EXISTING DIAPER DRAIN

SCALE: 1" = 1'-0"

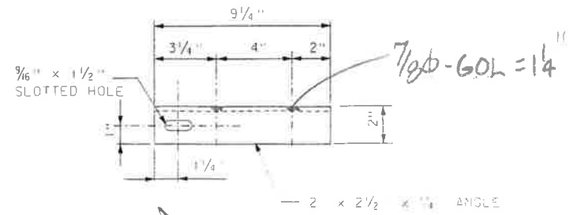

(15)~A1-A5 SHOWN

(15)~A2-OPP HAND

(A36-GALV)

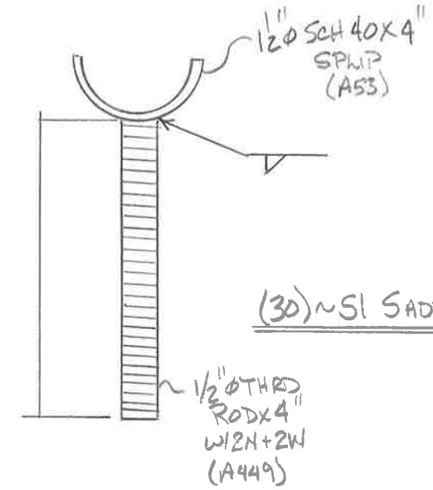

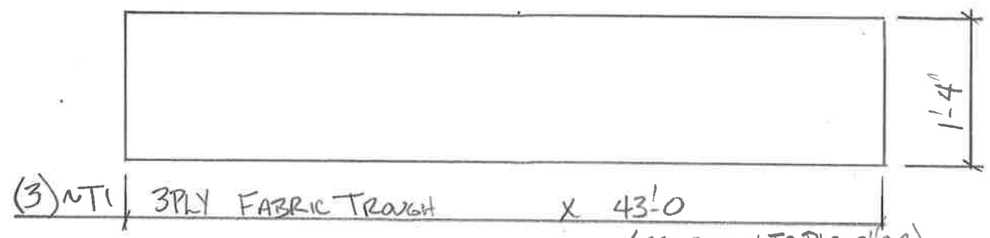

(3)~T1 | 3PLY FABRIC TROUGH X 43'-0

(TEK SCREW TO P1 @ 12" O.C)

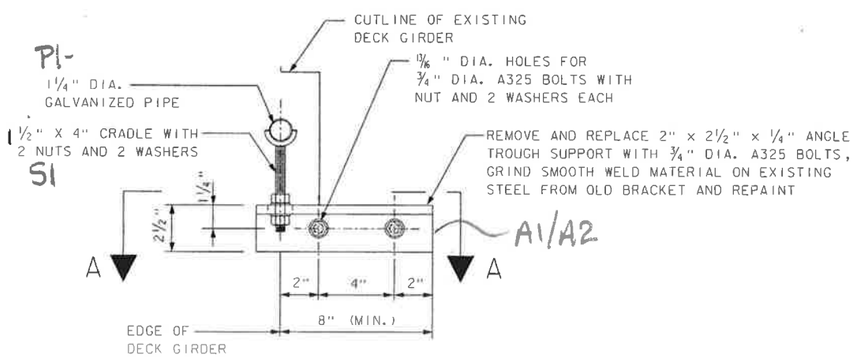

DETAIL B

3" = 1'-0"

DIAPER DRAIN REPAIR DETAILS

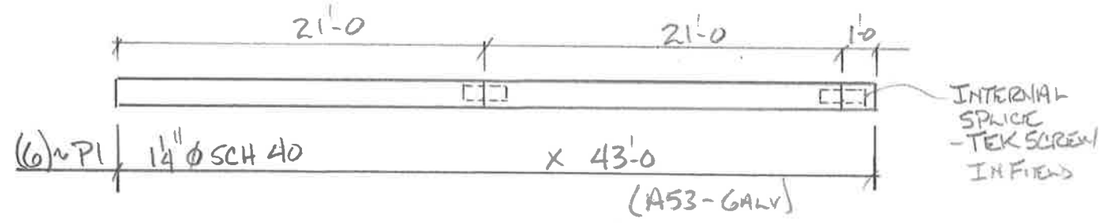

(6)~P1 | 1¼"ϕ SCH 40 X 43'-0

(A53-GALV)

FIELD BOLTS

-(60)~¾ X 2" A325 BOLT W/N+W

-(280)~#12 TEK SCREW X ¾"

DRAIN TROUGHS

DATE SUB.	PROJECT	CASTLETON BF BRNT (15) BR. #2
	LOCATION	
	ARCHITECT	
DATE APP.	ENGINEER	
DATE DIST.	CUSTOMER	MODERN PROTECTIVE COATING

REV. NO.	DATE	DESCRIPTION
HOLES: 13/16"ϕ (U.N.O.)		DATE:
PAINT: GALV A123		

MERRIMACK

MISCELLANEOUS IRON STRUCTURAL STEEL FABRICATORS

MERRIMACK SHEET METAL
119 HALL ST.
CONCORD, N.H., 03301
TEL. (603) 224-7766
FAX. (603) 224-7925

DR BY JD

REV BY RC

JOB NO. 6117

DWG NO. T1