Vermont Agency of Transportation
Final Revision Bridge 13 Trough and Scupper Shop Drawings

RECEIVED
ON: July 16, 2015
and Checked for
CONFORMANCE
BY: Mark Sargent DATE: 7/24/2015

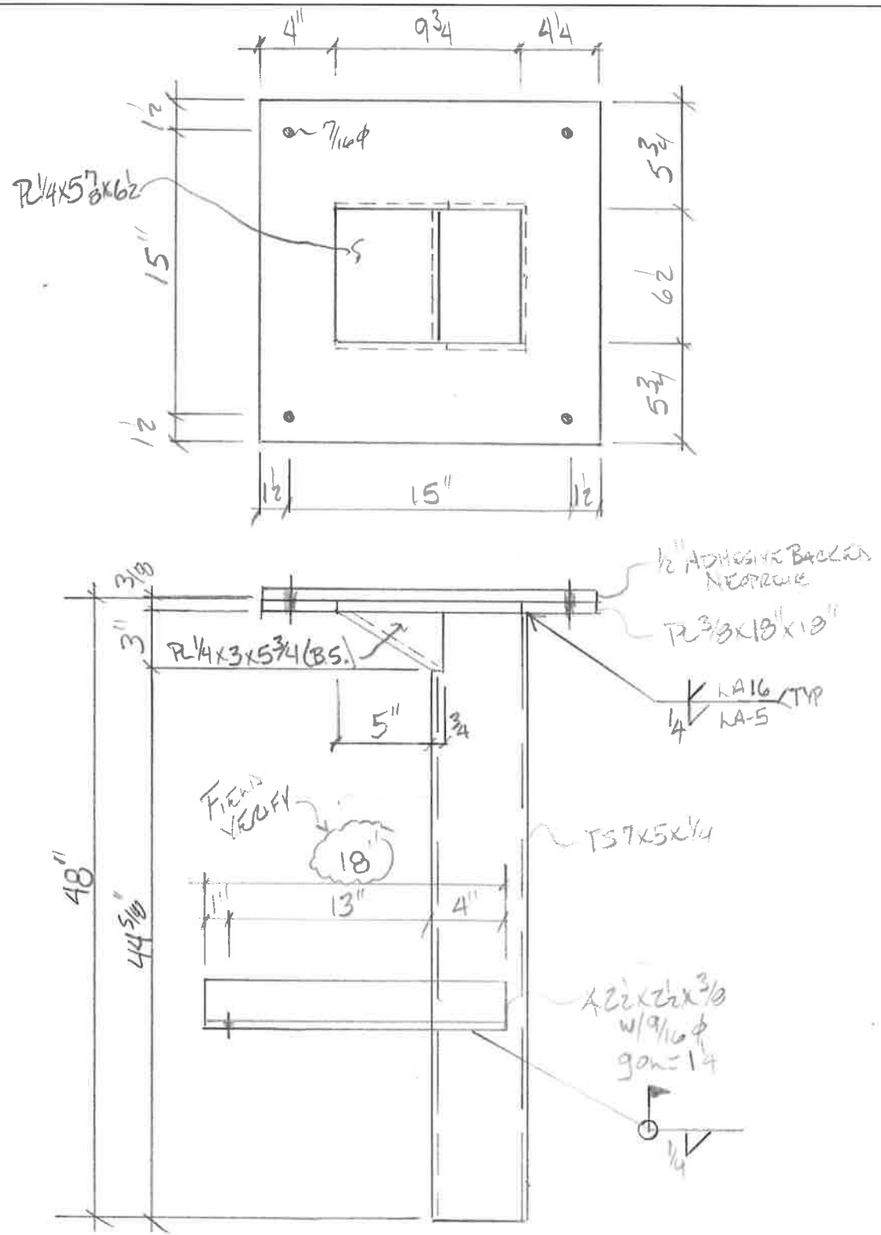

(3) ~ S1 SCUPPERS

PAINT IN FIELD
(12) 3/8 x 3" WELDED ANG.
(3) - 1/2" A325 BOLT - GALV
W/NUT, WASHER, LOCKWASHER

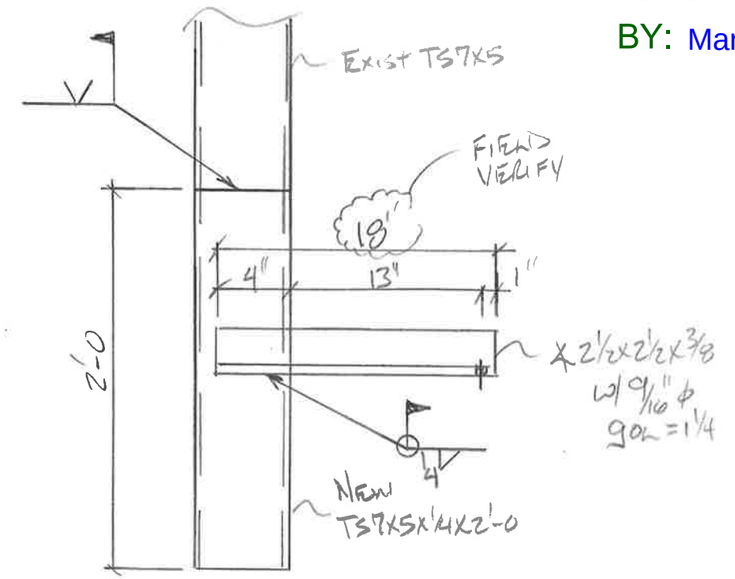

(2) ~ S2 SCUPPER REPAIR

PAINT IN FIELD
(2) ~ 1/2" A325 BOLT - GALV
W/NUT, WASHER, LOCK WASHER

SCUPPER REPAIR BR. 13 W/

DATE SUB.	PROJECT	CASTLETON, VT BF BRNT(15)
	LOCATION	
	ARCHITECT	
DATE APP.	ENGINEER	
DATE DIST.	CUSTOMER	MODERN PROTECTIVE COAT.

REV. NO.	DATE	DESCRIPTION
HOLES: 13/16"ϕ (U.N.O.)		DATE:
PAINT:		

MERRIMACK
MISCELLANEOUS IRON STRUCTURAL STEEL FABRICATORS

MERRIMACK SHEET METAL
119 HALL ST.
CONCORD, N.H., 03301
TEL. (603) 224-7766
FAX. (603) 224-7925

DR BY JD
REV BY RC
JOB NO. 6117
DWG NO. S1

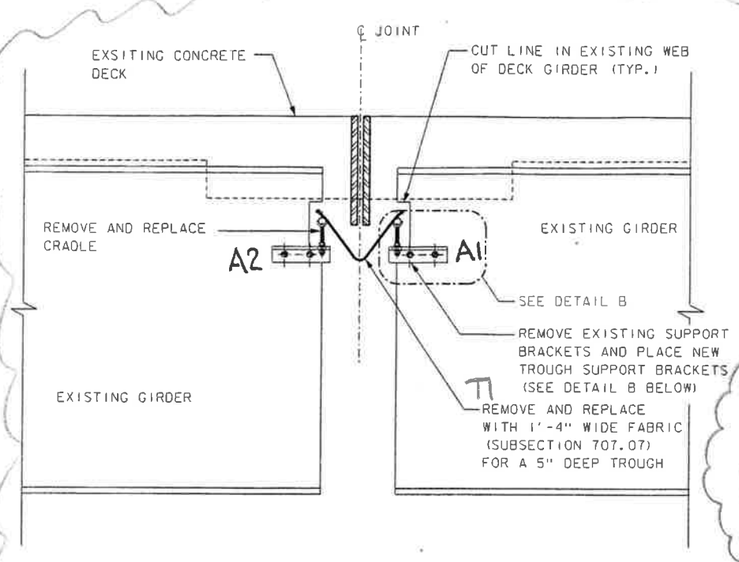

TYPICAL SECTION AT EXISTING DIAPER DRAIN

SCALE: 1" = 1'-0"

SEE ALT. BRACKET DESIGN - T3

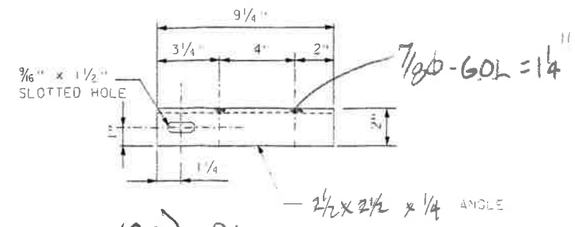

(20) ~ A1 - AS SHOWN

(20) ~ A2 - OPP HAND

(A36 - GALV)

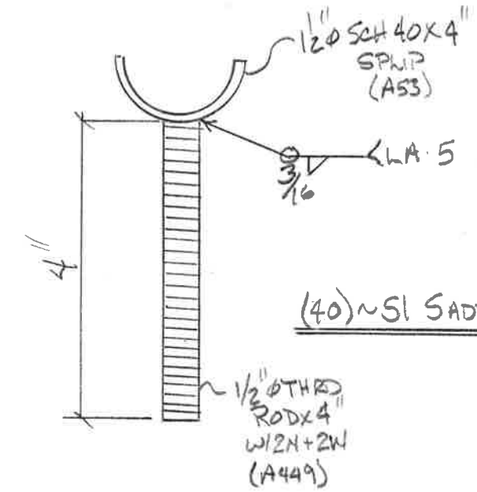

(40) ~ S1 SADDLES

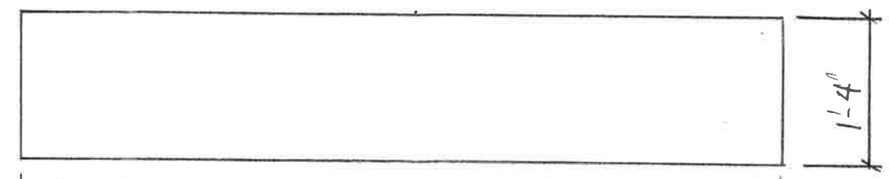

(3) ~ T1	3 PLY FABRIC TROUGH	x 40'-0	(TEK SCREW TO P1 @ 12" O.C)
(1) ~ T2	3 PLY FABRIC TROUGH	x 47'-0	

(6) ~ P1	1¼ϕ SCH 40	x 40'-0	(A53 - GALV)
(2) ~ P2	1¼ϕ SCH 40	x 47'-0	

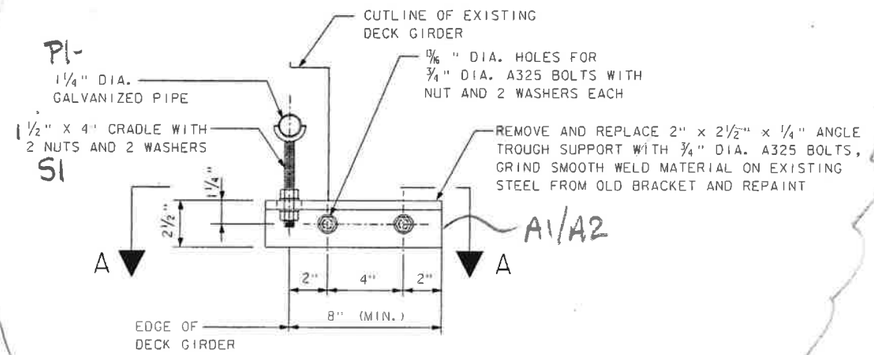

DETAIL B

3" = 1'-0"

DIAPER DRAIN REPAIR DETAILS

FIELD BOLTS

- (80) ~ ¾ x 2" A325 BOLT W/N+W
- (340) ~ #12 TEK SCREW x ¾"

Vermont Agency of Transportation

Final Revision Bridge 13 Trough and Scupper Shop Drawings.

RECEIVED

ON: July 16, 2015

and Checked for

CONFORMANCE

BY: Mark Sargent DATE: 7/24/2015

REV. NO.	DATE	DESCRIPTION
1	6/14	W/REV

HOLES: 13/16" (U.N.O.) DATE:

PAINT: GALV A123

DRAIN TROUGHS

DATE SUB.	PROJECT	CASTLETON BF BRNT (15) BR. #13W
	LOCATION	
	ARCHITECT	
DATE APP.	ENGINEER	
DATE DIST.	CUSTOMER	MODERN PROTECTIVE COATINGS

MERRIMACK

MERRIMACK SHEET METAL
119 HALL ST.
CONCORD, N.H., 03301
TEL. (603) 224-7766
FAX. (603) 224-7925

MISCELLANEOUS IRON STRUCTURAL STEEL FABRICATORS

DR BY JD

REV BY RC

JOB NO. 6117

DWG NO. T2

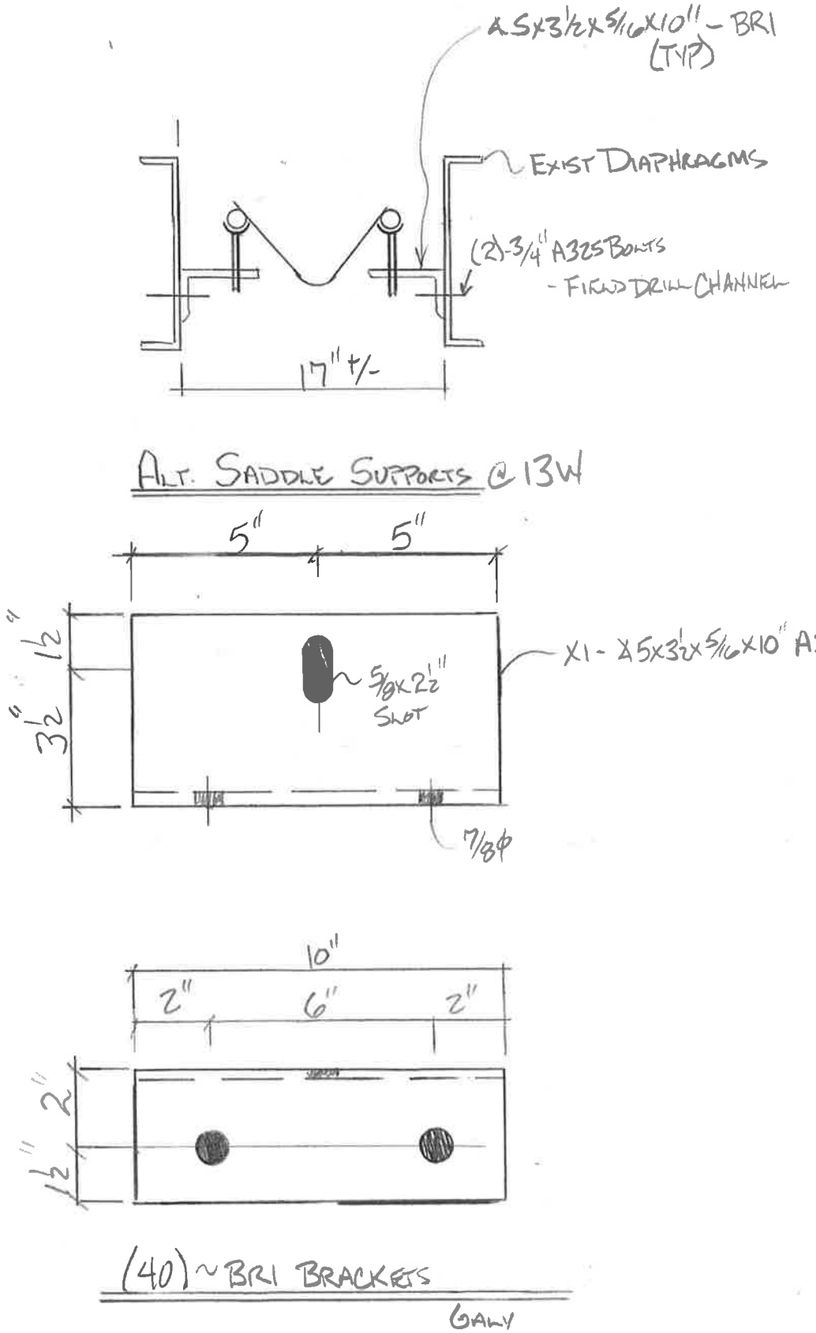

Vermont Agency of Transportation

Final Revision Bridge 13 Trough and Scupper Shop Drawings

RECEIVED

ON: July 16, 2015

and Checked for

CONFORMANCE

BY: Mark Sargent DATE: 7/24/2015

ALT BRACKETS

DATE SUB.	PROJECT	CASTLETON, VT BF BPNT/15
	LOCATION	
	ARCHITECT	
DATE APP.	ENGINEER	
DATE DIST.	CUSTOMER	MODERN PROTECTIVE COAT

REV. NO.	DATE	DESCRIPTION
HOLES: 13/16"ø (U.N.O.)		DATE:
PAINT: GALV		

MERRIMACK

MISCELLANEOUS IRON STRUCTURAL STEEL FABRICATORS

MERRIMACK SHEET METAL
119 HALL ST.
CONCORD, N.H., 03301
TEL. (603) 224-7766
FAX. (603) 224-7925

DR BY JD
REV BY PC
JOB NO. 6117
DWG NO. T3