Proposed Bridge Improvement Project

Wilmington STP 013-1(14)

Concrete:

Mix Designation: P60TER
1. Specified Mix Design - 5000 PSI
2. Proposed Mix Design - 6000 PSI
3. Striping Strength - 3000 PSI
4. Handling Strength - 3000 PSI
5. Shipping Strength - 5000 PSI
6. Install Strength - 5000 PSI
7. Traffic Loading - 5000 PSI

Fabrication Tolerances:
1. Width ±1/4"
2. Height ±1/4"
3. Length ±1/2"
4. Rebar Cover 2" Min. (Unless Noted Otherwise)
5. Rebar Spacing ±1"
6. Rebar Clearance ±1/4"
7. Insert Placement ±1/4"

Design Notes:
1. Design is in accordance w/ ASTM C1577, PCI MNL135, VAOT540 & AASHTO 2012 LRFD bridge design specs fifth edition
2. Any conflict between tolerances listed above shall result in the usage of the stricter tolerance
3. Design live load = HL-93
4. Materials and manufacturing shall conform to ASTM C1433

Installation:

1. Sub Base for Box Culvert / Cut Off Walls to be Compacted and Level
2. Precast Cut Off Walls to be installed
3. All Elevations are to be Checked and Verified they Match Those of Plan Set
4. Begin Sequence of Installing All Box Culvert Sections
5. Clean Granular Backfill for structures used for Backfill of Footers & of Box Culvert so water can reach weep holes if applicable
6. Fill all Lifting Holes, Bolt Pockets ~~and Box Culvert grooves and seams~~ w/ non-shrink grout. Applied by Site Contractor.
7. ASTM C1675-11 Box culvert installation guidelines shall be followed.

Reinforcing:

General Notes:
1. Reinforing Steel -
   a. Precast box sections, headwalls, wing walls, & cut off walls shall be level II dual coated bar ASTM A615

2. Materials and manufacturing shall conform to ASTM C1433

Tolerances:
1. Spacing ±1"
2. Clearance ±1/4"

Lap Lengths:
1. Per AASHTO 5.11.2.1.1 & 5.11.5.3.1
   Lap length for level II (dual coated):
   #4 Bar = 25"
   #6 Bar = 46"

Joint Treatment:

Vertical Seams:
Per VTrans approved product list 780.02
Overhead & vertical concrete repair mortar
Applied by site contractor

Horizontal Seams / Grout:
Per VTrans approved product list 707.03
Mortar, type IV
Applied by site contractor

Waterproofing:

1. By others if applicable
2. VTrans approved silane shall be shop applied to all exposed surfaces.

Miscellaneous:

1. All exposed hardware to be galvanized.
2. All exposed edges of concrete shall be chamfered

Legend:

- (A) 2"Ø PVC Sleeve
- (B) 4"Ø PVC Sleeve
- (C) Mechanical Bolt Pocket (A.L. Patterson w/ 1"Ø Coil Rod)
- (D) Oxford A750-7 Lifting Device
- (E) 1"Ø x 12" CX-9 Coil Loop Insert
- (F) 3/4"Ø FI-4234P Flared Loop Ferrule Insert
- (G) 1 1/2" x 3 1/2" Continuous Keyway
- (H) Solid Lines Indicate ¾" Chamfer
- (I) ⅝" FI 64 Ferrule Insert

STATE OF VERMONT
WILLIAM A. NOURSE
NO. 74452
Structural II
LICENSED
PROFESSIONAL ENGINEER

CONTRACTORS VTSPE:

1 - Revised per VTrans approved as noted comments from May 9, 2014 review. Also revised lifting insert locations for stripping in shop.

PRECAST CONCRETE BOX CULVERT SHOP DRAWINGS (SDI JOB #14213)

SUPERVISOR: M. WHEELER
DETAILER: I. ADAMS
CHECKER: T. Dudley
ENGINEER:

PROJECT NAME: Wilmington
PROJECT #: STP 013-1(14)
LOCATION: Wilmington, VT

M&M Excavating
PO Box 585
Chester, VT 05143
Ph: (802) 875-3319

FABRICATOR:
193 INDUSTRIAL AVE.
WILLISTON, VT 05495
Ph: (802) 658-0201

SD Ireland PRECAST

06/23/2014 | TEXT | 1_OF_7

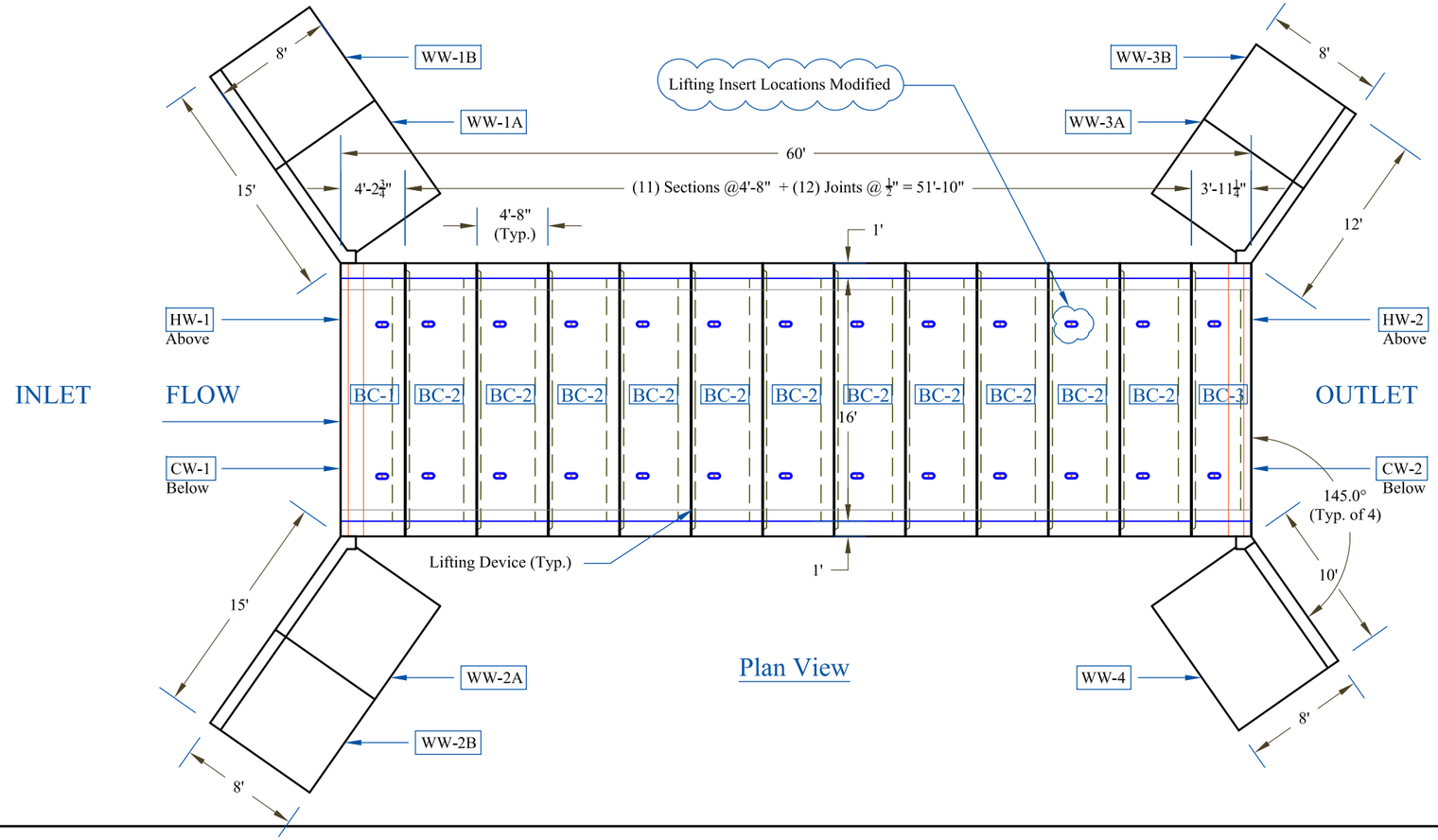

Plan View

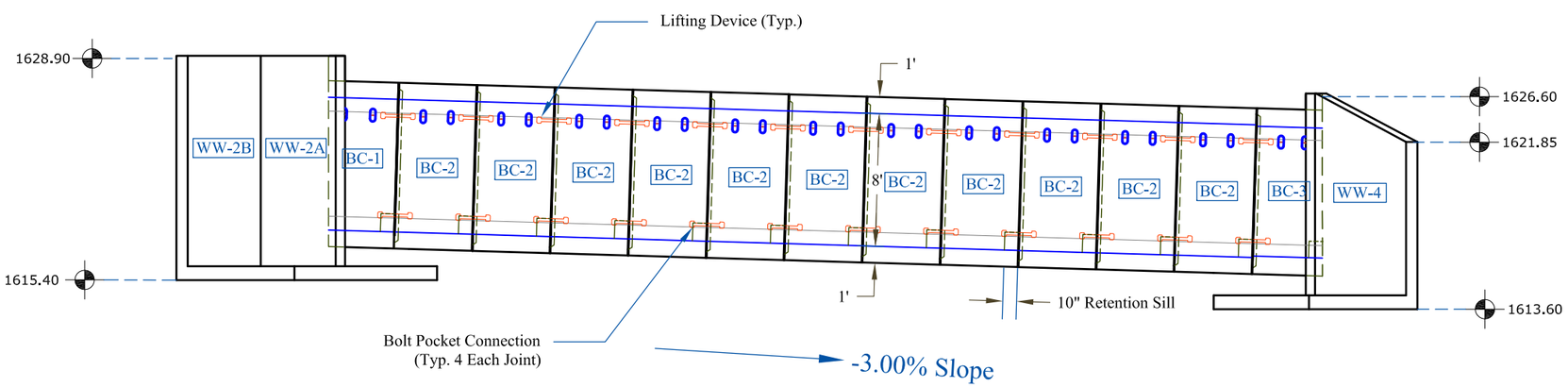

Side Elevation View

Table of Units				
Name	Qty	Length	Vol.(CY)	Wt.(lbs.)*
BC-1**	1	4'-1"	9.37	37,480
BC-2*	11	4'-8"	9.57	38,280
BC-3**	1	4'-1"	9.10	36,400
WW-1A	1	7'-6"	5.35	21,400
WW-1B	1	7'-6"	5.12	20,480
WW-2A	1	7'-6"	5.35	21,400
WW.2B	1	7'-6"	5.12	20,480
WW-3A	1	6'-0"	4.23	16,900
WW-3B	1	6'-0"	4.00	16,000
WW-4	1	10'	6.19	24,760
CW-1	1	18'	1.32	5280
CW-2	1	18'	1.32	5280

* Baffle Weight Included in BC-2
** Baffle and Headwall Included in BC-1 and BC-3

STATE OF VERMONT
WILLIAM A. NOURSE
NO. 74452
Structural II
LICENSED
PROFESSIONAL ENGINEER

Culvert Specifications	
Inside Dimensions	8'-0"x16'-0"
Waterway Area	96 Sq. Ft.
Top Slab Thickness	12"
Side Wall Thickness	12"
Bottom Slab Thickness	12"

CONTRACTORS VTSPE:

- Ⓐ 2"Ø PVC Sleeve
- Ⓑ 4"Ø PVC Sleeve
- Ⓒ Mechanical Bolt Pocket (A.L. Patterson w/ 1"Ø Coil Rod)
- Ⓓ Oxford A750-7 Lifting Device
- Ⓔ 1"Øx12" CX-9 Coil Loop Insert
- Ⓕ Patterson Bolt Pocket Former
- Ⓖ 1 1/2" x 3 1/2" Continuous Keyway
- Ⓗ Solid Lines Indicate ¾" Chamfer
- Ⓘ ⅝" FI 64 Ferrule Insert

PRECAST CONCRETE BOX CULVERT SHOP DRAWINGS (SDI JOB #14213)

SUPERVISOR: M. WHEELER
DETAILER: I. ADAMS
CHECKER: T. Dudley
ENGINEER:

PROJECT NAME: Wilmington
PROJECT #: STP 013-1(14)
LOCATION: Wilmington, VT

M&M Excavating
PO Box 585
Chester, VT 05143
Ph: (802) 875-3319

FABRICATOR:
193 INDUSTRIAL AVE.
WILLISTON, VT 05495
Ph: (802) 658-0201

SD Ireland PRECAST

06/23/2014 | PLAN_AND_ELEVATION | 2_OF_7

BC-1 Detail

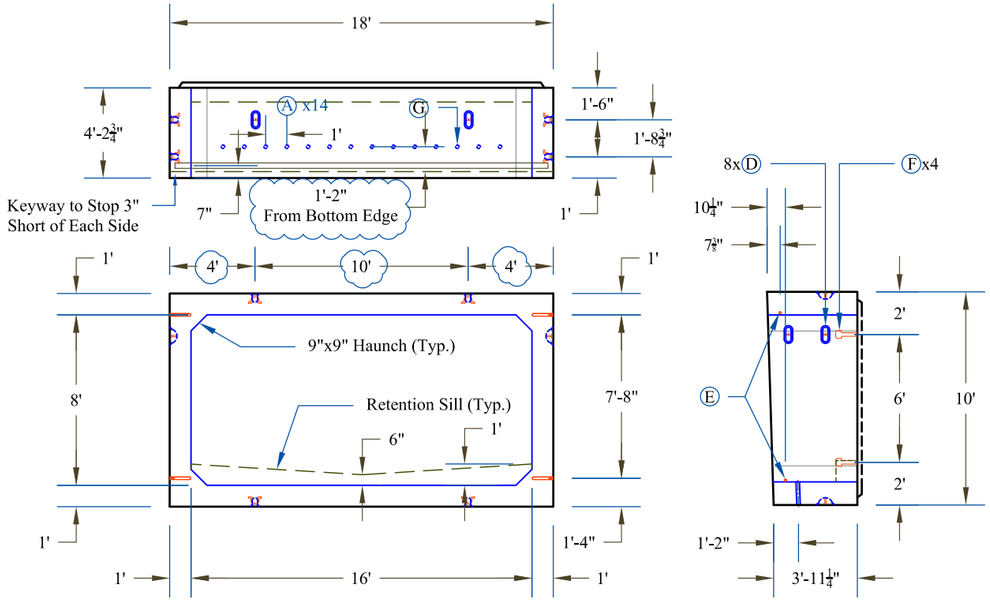

BC-2 Detail

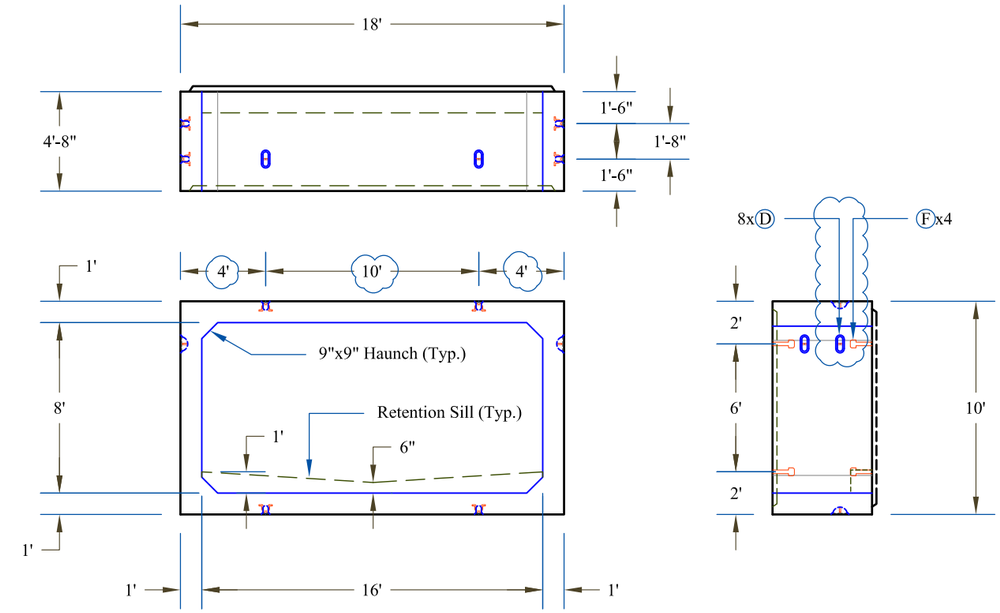

BC-3 Detail

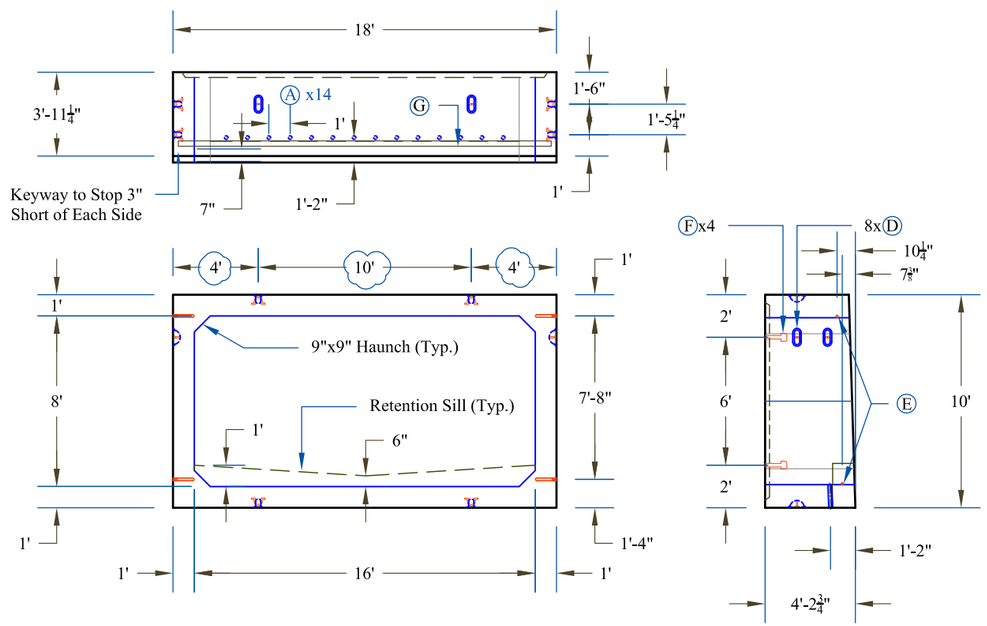

Box Reinforcing Detail

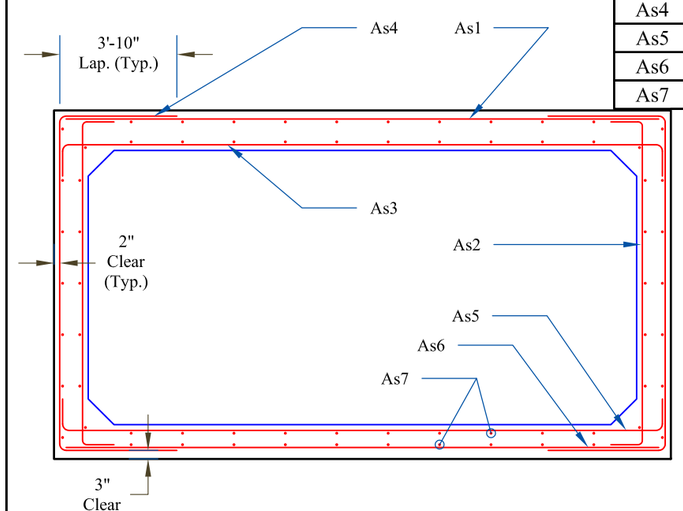

Rebar Schedule

Mark	Size	Qty.*	Max Spacing	Length	Type	A	B	C
As1	#4	39	18"	212"	Str	212"		
As2**	#4	39	18"	127"	Bent	6"	115"	6"
As3**	#6	127	6"	230"	Bent	9"	212"	9"
As4	#6	260	6"	207"	Bent	46"	115"	46"
As5	#6	101	8"	228"	Bent	8"	212"	8"
As6	#4	39	18"	212"	Str	212"		
As7	#4	572	18"	Varies	Str	Varies		

*Quantities Apply for Box Culvert
**Additional Bars as Per T. Dudley's Email
Dated 05/21/14, Item #5
Note: Quantities in Addition to Consideration to
Dudley's Email Dated 05/21/14, Items 1 - 9

STATE OF VERMONT
WILLIAM A. NOURSE
NO. 74452
Structural II
LICENSED
PROFESSIONAL ENGINEER

CONTRACTORS VTSPE:

- Ⓐ 2"Ø PVC Sleeve
- Ⓑ 4"Ø PVC Sleeve
- Ⓒ Mechanical Bolt Pocket (A.L. Patterson w/ 1"Ø Coil Rod)
- Ⓓ Oxford A750-7 Lifting Device
- Ⓔ 1"Øx12" CX-9 Coil Loop Insert
- Ⓕ Patterson Bolt Pocket Former
- Ⓖ 1 1/2" x 3 1/2" Continuous Keyway
- Ⓗ Solid Lines Indicate ¾" Chamfer
- Ⓘ ⅝" FI 64 Ferrule Insert

PRECAST CONCRETE BOX CULVERT SHOP DRAWINGS (SDI JOB #14213)

SUPERVISOR: M. WHEELER
DETAILER: I. ADAMS
CHECKER: T. Dudley
ENGINEER:

PROJECT NAME: Wilmington
PROJECT #: STP 013-1(14)
LOCATION: Wilmington, VT

M&M Excavating
PO Box 585
Chester, VT 05143
Ph: (802) 875-3319

FABRICATOR:
193 INDUSTRIAL AVE.
WILLISTON, VT 05495
Ph: (802) 658-0201

SD Ireland PRECAST

06/23/2014

BOX_SECTIONS

WW-1A Detail

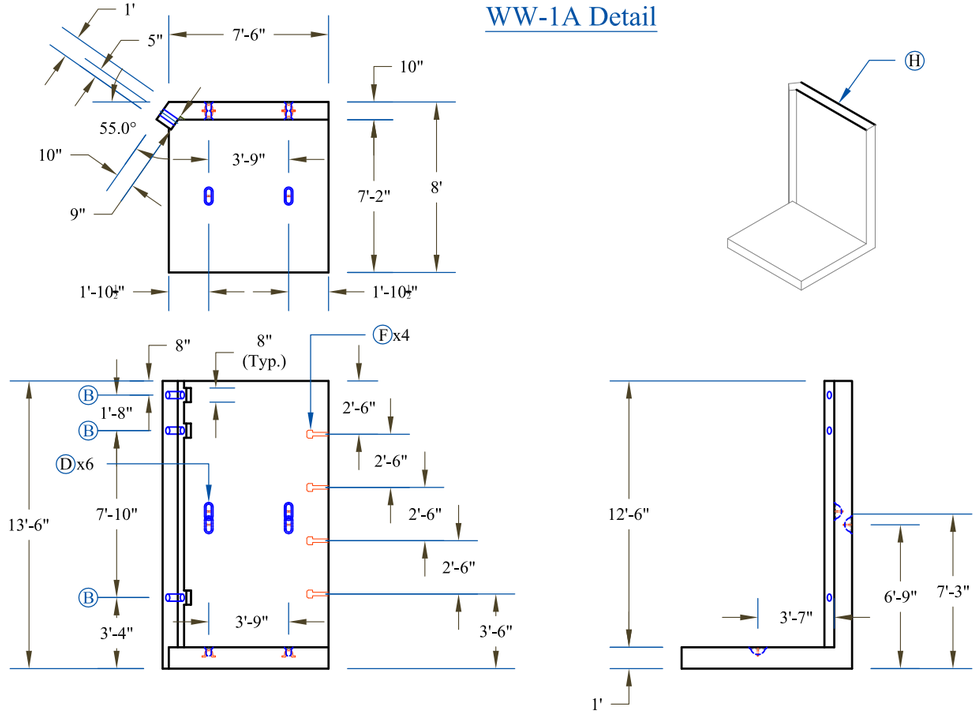

WW-2A Detail

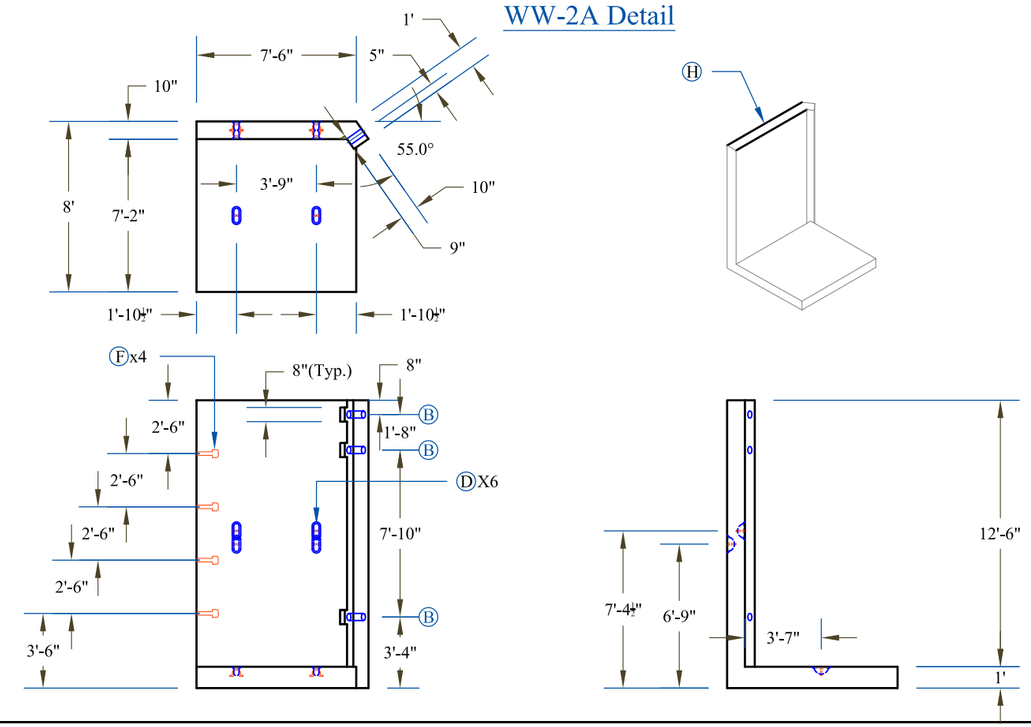

WW-3A Detail

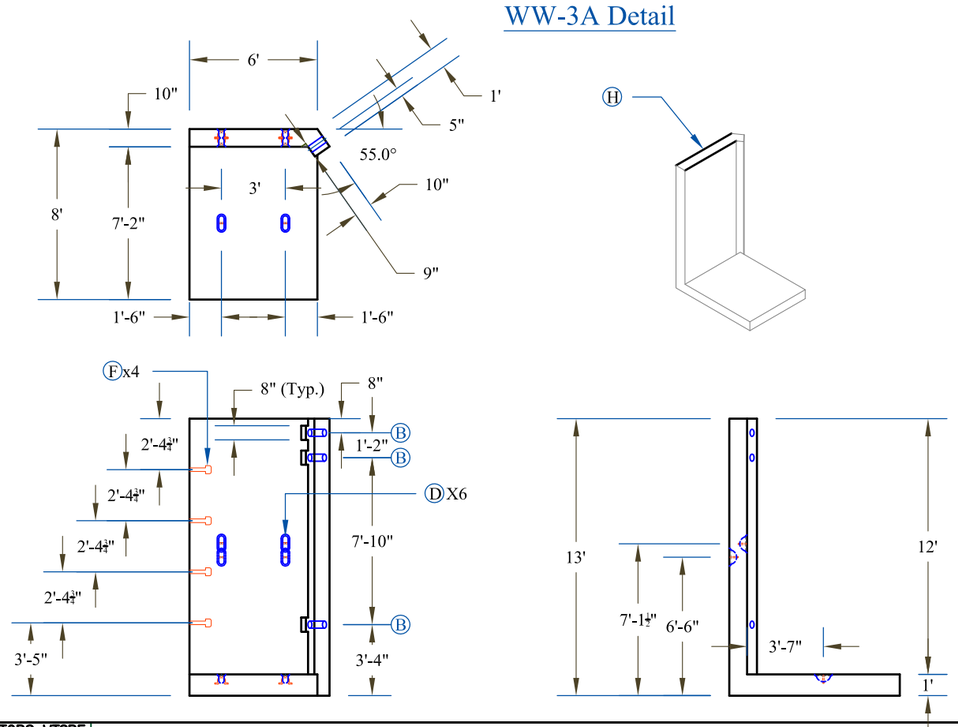

WW-4 Detail

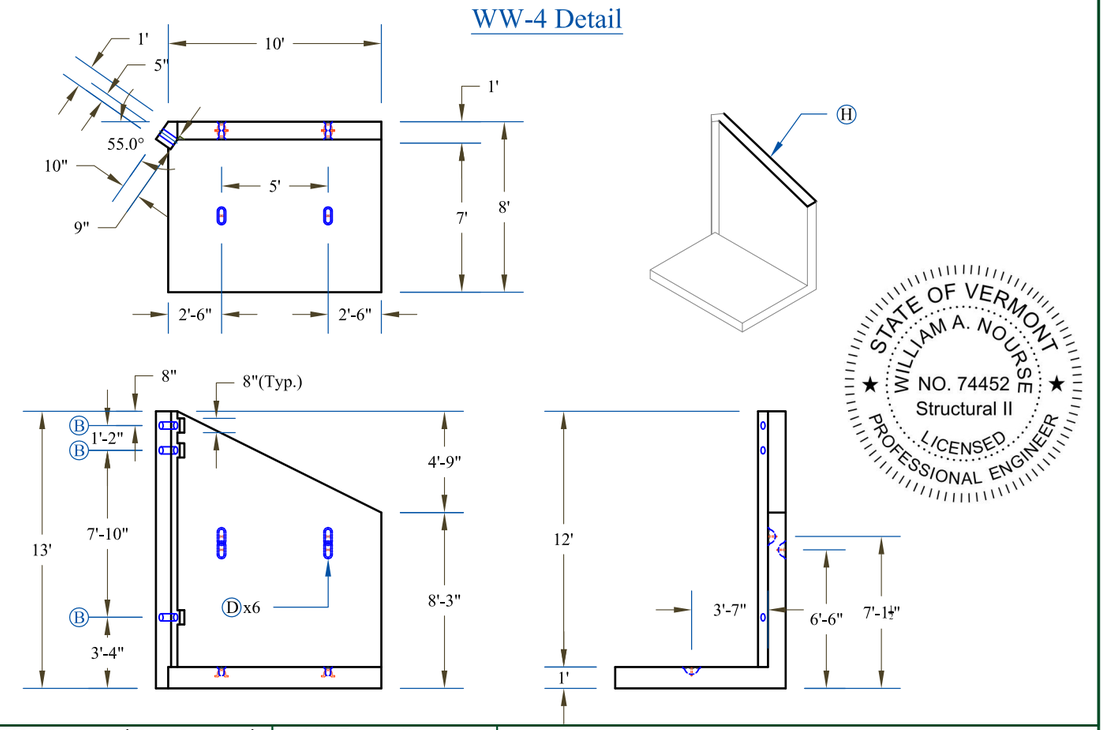

CONTRACTORS VTSPE:

- Ⓐ 2"Ø PVC Sleeve
- Ⓑ 4"Ø PVC Sleeve
- Ⓒ Mechanical Bolt Pocket (A.L. Patterson w/ 1"Ø Coil Rod)
- Ⓓ Oxford A750-7 Lifting Device
- Ⓔ 1"Øx12" CX-9 Coil Loop Insert
- Ⓕ Patterson Bolt Pocket Former
- Ⓖ 1 1/2" x 3 1/2" Continuous Keyway
- Ⓗ Solid Lines Indicate ¾" Chamfer
- Ⓘ ⅝" FI 64 Ferrule Insert

PRECAST CONCRETE BOX CULVERT SHOP DRAWINGS (SDI JOB #14213)

SUPERVISOR: M. WHEELER
DETAILER: I. ADAMS
CHECKER: T. Dudley
ENGINEER:

PROJECT NAME: Wilmington
PROJECT #: STP 013-1(14)
LOCATION: Wilmington, VT

M&M Excavating
PO Box 585
Chester, VT 05143
Ph: (802) 875-3319

FABRICATOR:
193 INDUSTRIAL AVE.
WILLISTON, VT 05495
Ph: (802) 658-0201

SD Ireland PRECAST

06/23/2014

WINGWALLS

WW-1B Detail

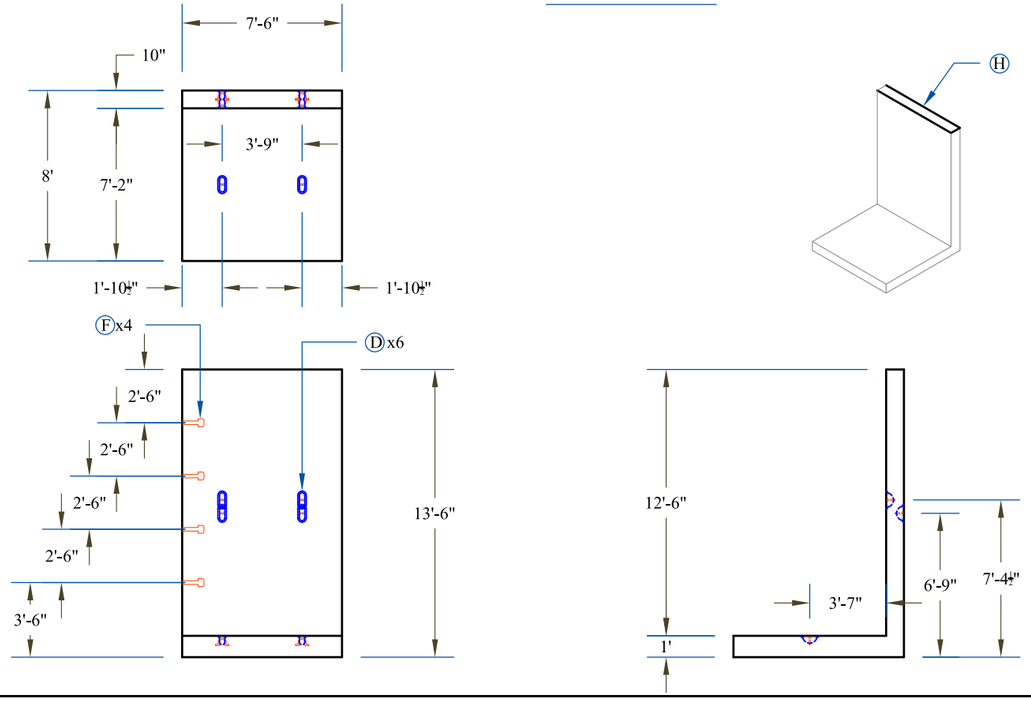

WW-2B Detail

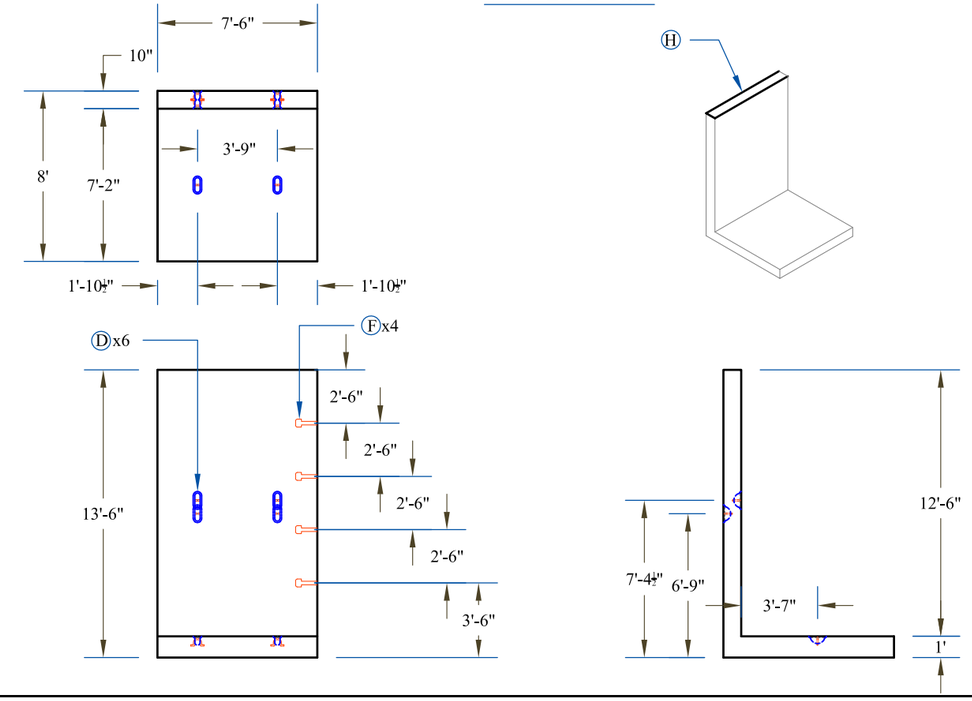

WW-3B Detail

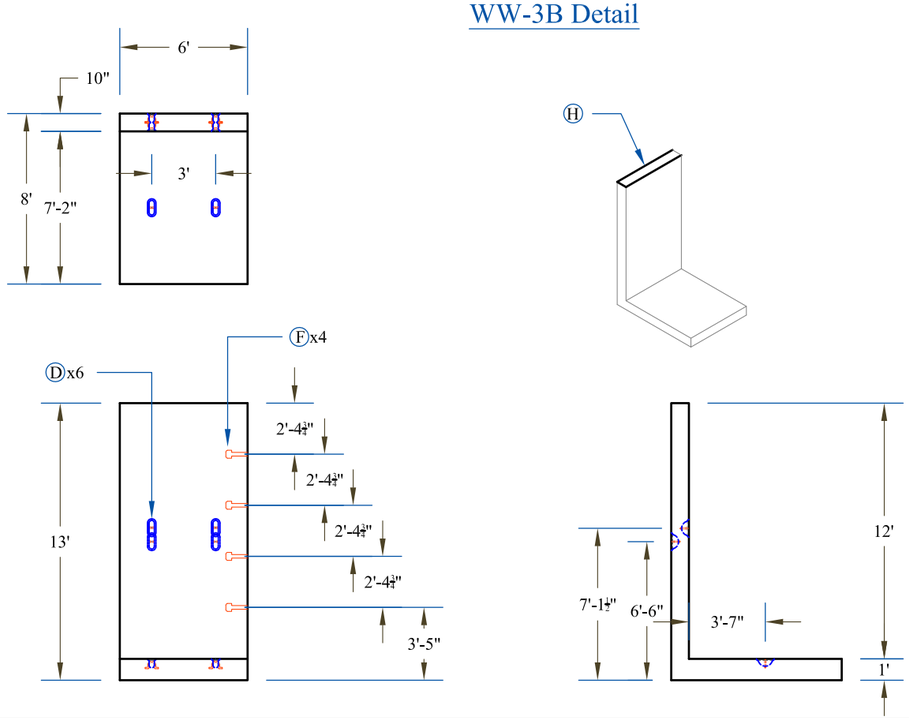

CW-1/2 Detail

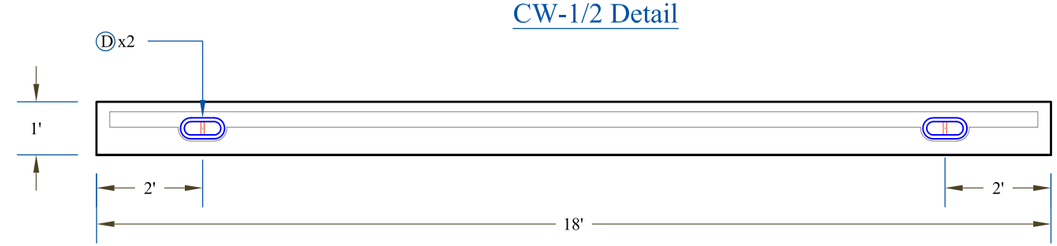

Retention Sill Detail

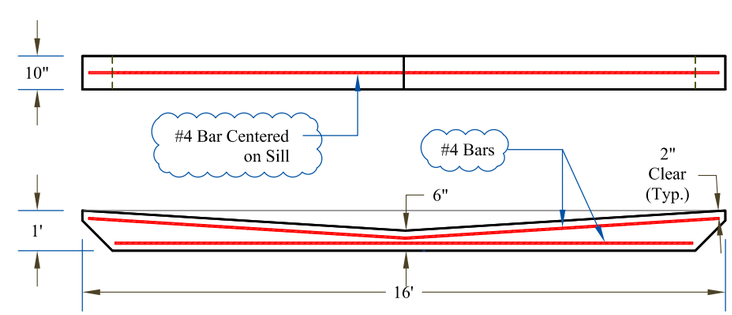

STATE OF VERMONT
WILLIAM A. NOURSE
NO. 74452
Structural II
LICENSED
PROFESSIONAL ENGINEER

CONTRACTORS VTSPE:

- Ⓐ 2"Ø PVC Sleeve
- Ⓑ 4"Ø PVC Sleeve
- Ⓒ Mechanical Bolt Pocket (A.L. Patterson w/ 1"Ø Coil Rod)
- Ⓓ Oxford A750-7 Lifting Device
- Ⓔ 1"Øx12" CX-9 Coil Loop Insert
- Ⓕ Patterson Bolt Pocket Former
- Ⓖ 1 1/2" x 3 1/2" Continuous Keyway
- Ⓗ Solid Lines Indicate ¾" Chamfer
- Ⓘ ⅝" FI 64 Ferrule Insert

PRECAST CONCRETE BOX CULVERT SHOP DRAWINGS (SDI JOB #14213)

SUPERVISOR: M. WHEELER
DETAILER: I. ADAMS
CHECKER: T. Dudley
ENGINEER:

PROJECT NAME: Wilmington
PROJECT #: STP 013-1(14)
LOCATION: Wilmington, VT

M&M Excavating
PO Box 585
Chester, VT 05143
Ph: (802) 875-3319

FABRICATOR:
193 INDUSTRIAL AVE.
WILLISTON, VT 05495
Ph: (802) 658-0201

SD Ireland PRECAST

06/23/2014 | WINGWALLS | 5_OF_7

HW-1 Detail (Inlet)

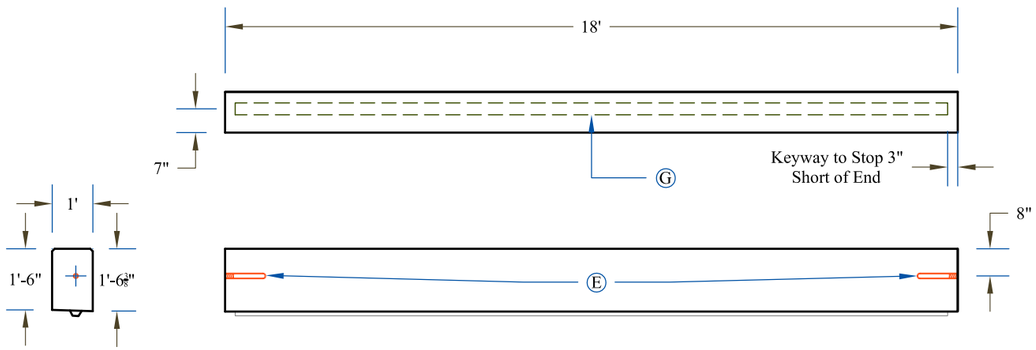

HW-2 Detail (Outlet)

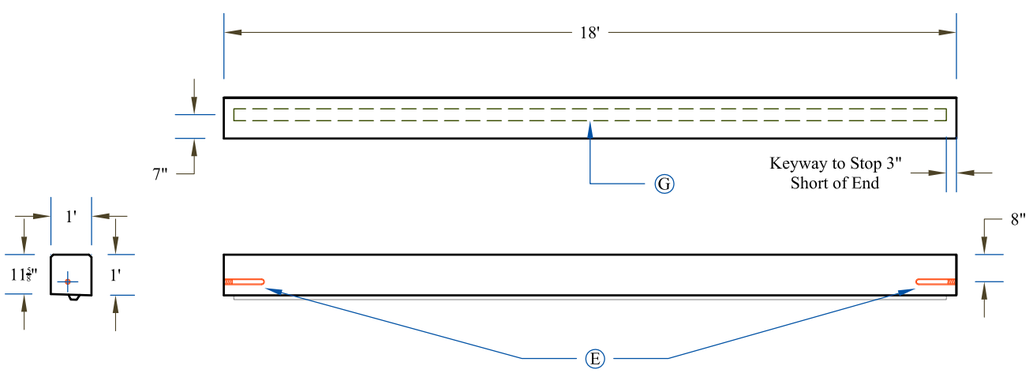

Wingwall Reinforcing Detail

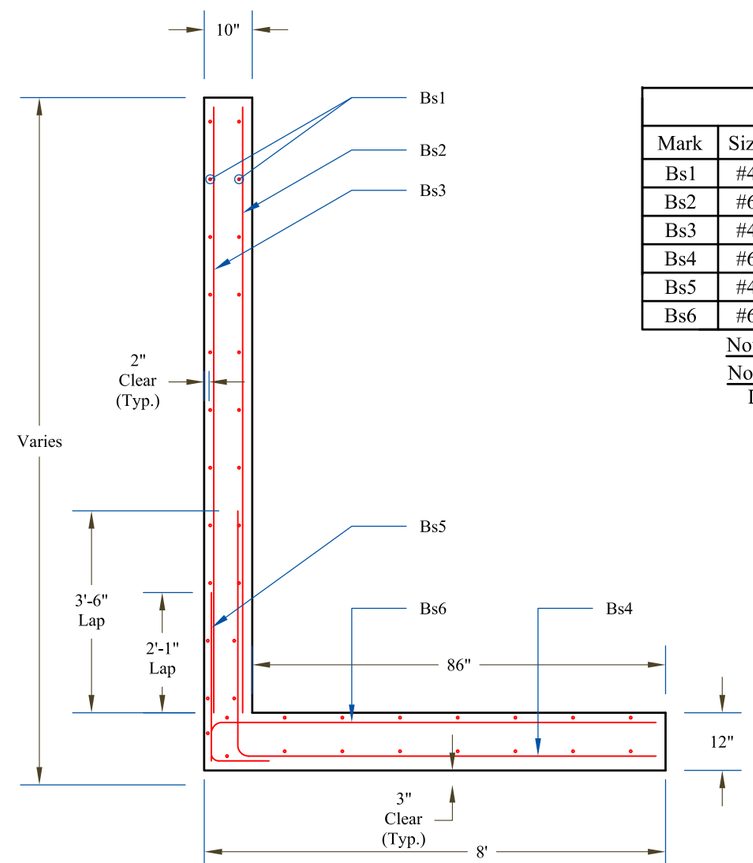

Rebar Schedule							
Mark	Size	Qty	Max Spacing	Length	Type	A	B
Bs1	#4	210	18"	Varies	Str	Varies	
Bs2	#6	84	8"	Varies	Str	Varies	
Bs3	#4	61	12"	Varies	Str	Varies	
Bs4	#6	84	8"	135"	Bent	86"	49"
Bs5	#4	61	12"	46"	Bent	12"	34"
Bs6	#6	84	8"	99"	Str	92"	7"

Note: 2" Clear Typical Unless Noted Otherwise

Note: Quantities in Addition to Consideration to Dudley's Email Dated 05/21/14, Items 1 - 9

Bent Bar Dimension Guide

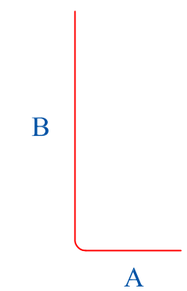

Headwall Isometric Detail

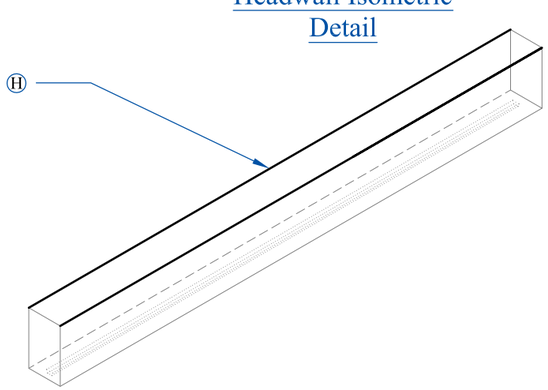

STATE OF VERMONT
WILLIAM A. NOURSE
NO. 74452
Structural II
LICENSED
PROFESSIONAL ENGINEER

CW-1 (Inlet) Section Detail

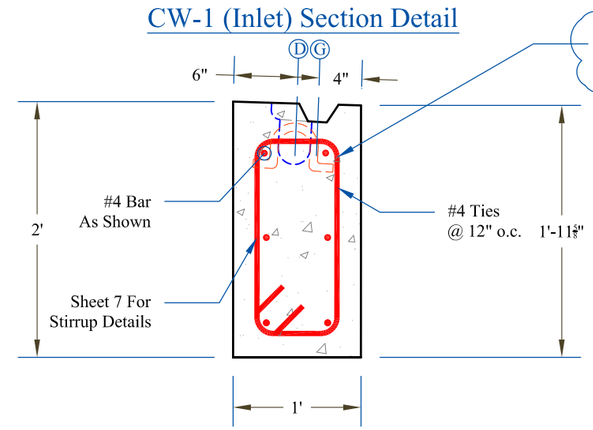

CW-2 (Outlet) Section Detail

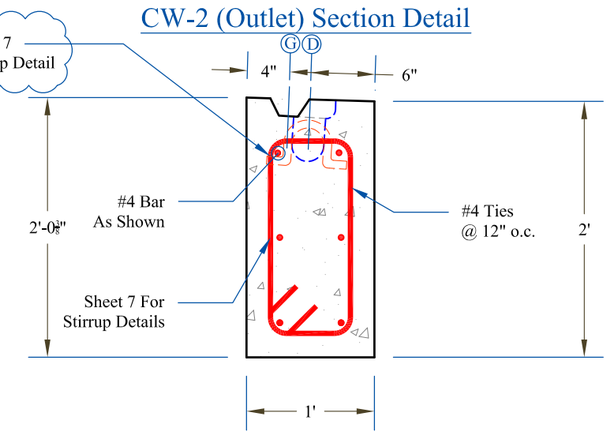

CONTRACTORS VTSPE:

- Ⓐ 2"Ø PVC Sleeve
- Ⓑ 4"Ø PVC Sleeve
- Ⓒ Mechanical Bolt Pocket (A.L. Patterson w/ 1"Ø Coil Rod)
- Ⓓ Oxford A750-7 Lifting Device
- Ⓔ 1"Øx12" CX-9 Coil Loop Insert
- Ⓕ Patterson Bolt Pocket Former
- Ⓖ 1 1/2" x 3 1/2" Continuous Keyway
- Ⓗ Solid Lines Indicate ¾" Chamfer
- Ⓘ ⅝" FI 64 Ferrule Insert

PRECAST CONCRETE BOX CULVERT SHOP DRAWINGS (SDI JOB #14213)

SUPERVISOR: M. WHEELER
DETAILER: I. ADAMS
CHECKER: T. Dudley
ENGINEER:

PROJECT NAME: Wilmington
PROJECT #: STP 013-1(14)
LOCATION: Wilmington, VT

M&M Excavating
PO Box 585
Chester, VT 05143
Ph: (802) 875-3319

FABRICATOR:
193 INDUSTRIAL AVE.
WILLISTON, VT 05495
Ph: (802) 658-0201

SD Ireland PRECAST

06/23/2014

CUTOFF/HEADWALLS

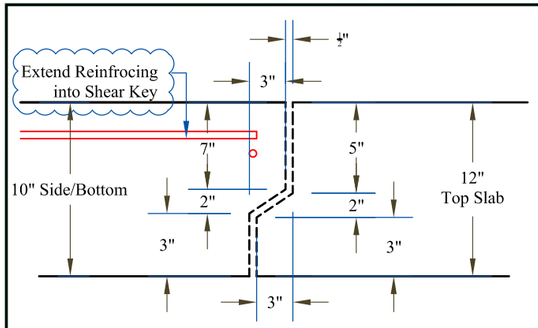

Box Culvert Key Detail

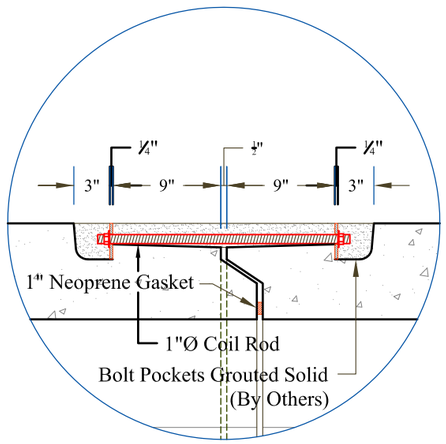

Bolt Pocket Connection Detail

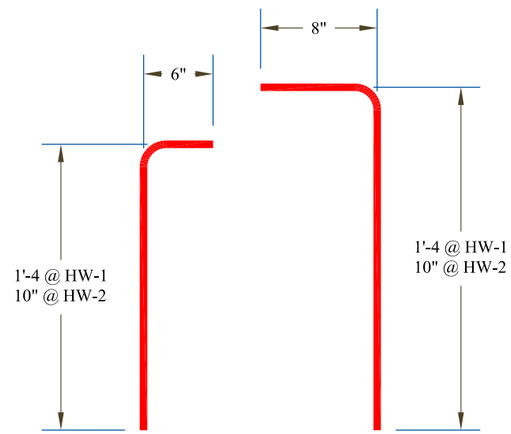

Headwall Rebar Detail

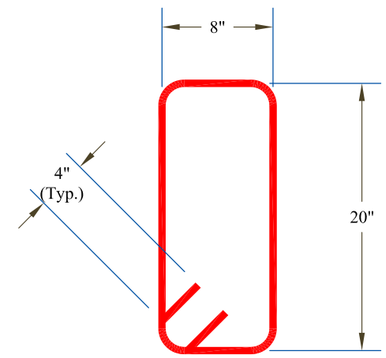

Cuttoff Wall Stirrup Detail

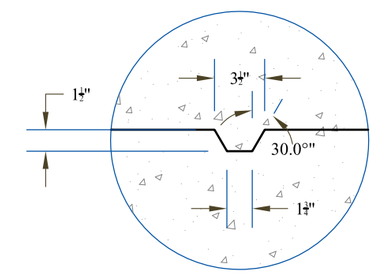

Keyway Detail

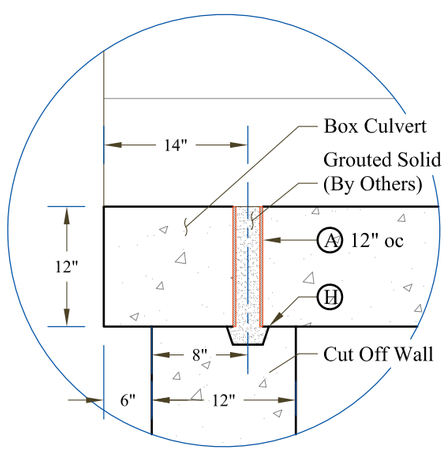

Culvert to Cut Off Wall Connection

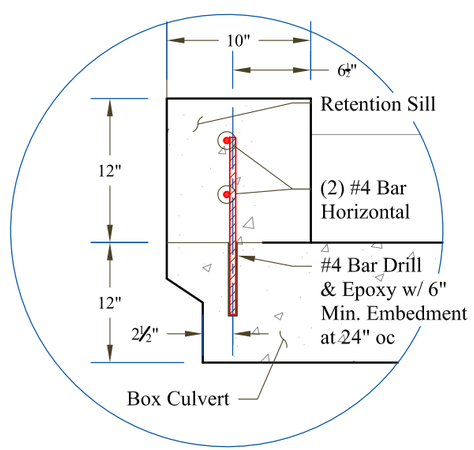

Retention Sill Reinforcing Detail

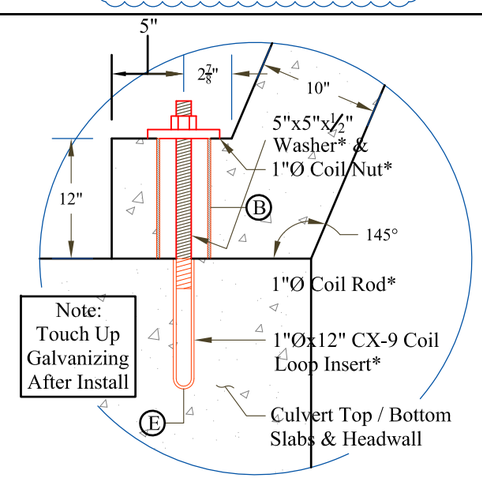

Wing Wall to Box Culvert Connection

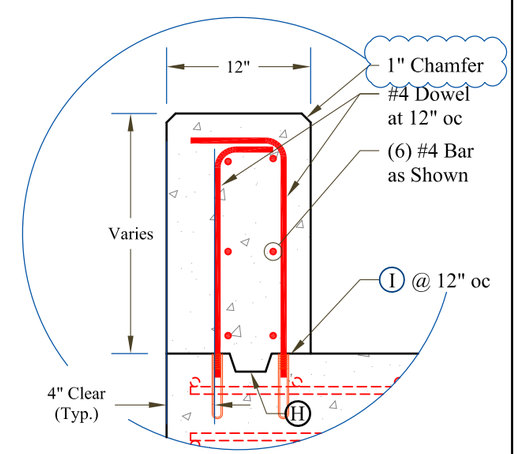

Head Wall - 1 to Box Culvert Connection

STATE OF VERMONT
WILLIAM A. NOURSE
NO. 74452
Structural II
LICENSED
PROFESSIONAL ENGINEER

CONTRACTORS VTSPE:

- Ⓐ 2"Ø PVC Sleeve
- Ⓑ 4"Ø PVC Sleeve
- Ⓒ Mechanical Bolt Pocket (A.L. Patterson w/ 1"Ø Coil Rod)
- Ⓓ Oxford A750-7 Lifting Device
- Ⓔ 1"Øx12" CX-9 Coil Loop Insert
- Ⓕ Patterson Bolt Pocket Former
- Ⓖ 1 1/2" x 3 1/2" Continuous Keyway
- Ⓗ Solid Lines Indicate ¾" Chamfer
- Ⓘ ⅝" FI 64 Ferrule Insert

PRECAST CONCRETE BOX CULVERT SHOP DRAWINGS (SDI JOB #14213)

SUPERVISOR: M. WHEELER
DETAILER: I. ADAMS
CHECKER: T. Dudley
ENGINEER:

PROJECT NAME: Wilmington
PROJECT #: STP 013-1(14)
LOCATION: Wilmington, VT

M&M Excavating
PO Box 585
Chester, VT 05143
Ph: (802) 875-3319

FABRICATOR:
193 INDUSTRIAL AVE.
WILLISTON, VT 05495
Ph: (802) 658-0201

SD Ireland PRECAST

06/23/2014

CONNECTIONS