Proposed Bridge Improvement Project

Wilmington STP 013-1(14)

Concrete:

Mix Designation: P60TER
1. Specified Mix Design - 5000 PSI
2. Proposed Mix Design - 6000 PSI
3. Striping Strength - 3000 PSI
4. Handling Strength - 3000 PSI
5. Shipping Strength - 5000 PSI
6. Install Strength - 5000 PSI
7. Traffic Loading - 5000 PSI

Fabrication Tolerances:
1. Width ±1/4"
2. Height ±1/4"
3. Length ±1/2"
4. Rebar Cover 2" Min. (Unless Noted Otherwise)
5. Rebar Spacing ±1"
6. Rebar Clearance ±1/4"
7. Insert Placement ±1/4"

Design Notes:
1. Design is in accordance w/ ASTM C1577, PCI MNL135, VAOT540 & AASHTO 2012 LRFD Bridge Design Specs Fifth Edition
2. Any conflict between tolerances listed above shall result in the usage of the stricter tolerance
3. Design Live Load = HL-93
4. Materials and Manufacturing shall conform to ASTM C1433

Installation:

1. Sub Base for Box Culvert / Cut Off Walls to be compacted and level
2. Precast Cut Off Walls to be installed
3. All Elevations are to be Checked and Verified they Match Those of Plan Set
4. Begin Sequence of Installing All Box Culvert Sections
5. Clean Granular Backfill for structures used for Backfill of Footers & of Box Culvert so water can reach weep holes if applicable
6. Fill all Lifting Holes, Bolt Pockets and Box Culvert grooves and seams w/ non-shrink grout. Applied by Site Contractor.
7. ASTM C1675-11 Box culvert installation guidelines shall be followed.

Reinforcing:

General Notes:
1. Reinforing Steel -
   a. Precast Box Sections, Headwalls, Wing Walls, & Cut Off Walls shall be Level II Dual Coated Bar ASTM A615
2. Materials and Manufacturing shall conform to ASTM C1433

Tolerances:
1. Spacing ±1"
2. Clearance ±1/4"

Lap Lengths:
1. Per AASHTO 5.11.2.1.1 & 5.11.5.3.1
   Lap Length for Level II (Dual Coated):
   #4 Bar = 25"
   #6 Bar = 46"

Joint Treatment:

Vertical Seams:
Per VTrans Approved Product List 780.02
Overhead & Vertical Concrete Repair Mortar
Applied by Site Contractor

Horizontal Seams / Grout:
Per VTrans Approved Product List 707.03
Mortar, Type IV
Applied by Site Contractor

Waterproofing:

1. By Others if Applicable

Miscellaneous:

1. All exposed hardware to be galvanized.
2. All Exposed Edges of Concrete Shall be Chamfered

Legend:

- (A) 2"Ø PVC Sleeve
- (B) 4"Ø PVC Sleeve
- (C) Mechanical Bolt Pocket (A.L. Patterson w/ 1"Ø Coil Rod)
- (D) Oxford A750-7 Lifting Device
- (E) 1"Ø x 12" CX-9 Coil Loop Insert
- (F) 3/4"Ø FI-4234P Flared Loop Ferrule Insert
- (G) 1 1/2" x 3 1/2" Continuous Keyway
- (H) Solid Lines Indicate ¾" Chamfer
- (I) ⅝" FI 64 Ferrule Insert

STATE OF VERMONT
WILLIAM A. NOURSE
NO. 74452
Structural II
LICENSED
PROFESSIONAL ENGINEER

CONTRACTORS VTSPE:	PRECAST CONCRETE BOX CULVERT SHOP DRAWINGS (SDI JOB #14213)		M&M Excavating PO Box 585 Chester, VT 05143 Ph: (802) 875-3319	FABRICATOR: 193 INDUSTRIAL AVE. WILLISTON, VT 05495 Ph: (802) 658-0201	SD Ireland PRECAST
	SUPERVISOR: M. WHEELER DETAILER: I. ADAMS CHECKER: T. Dudley ENGINEER:	PROJECT NAME: Wilmington PROJECT #: STP 013-1(14) LOCATION: Wilmington, VT	04/29/2014	TEXT	1_OF_6

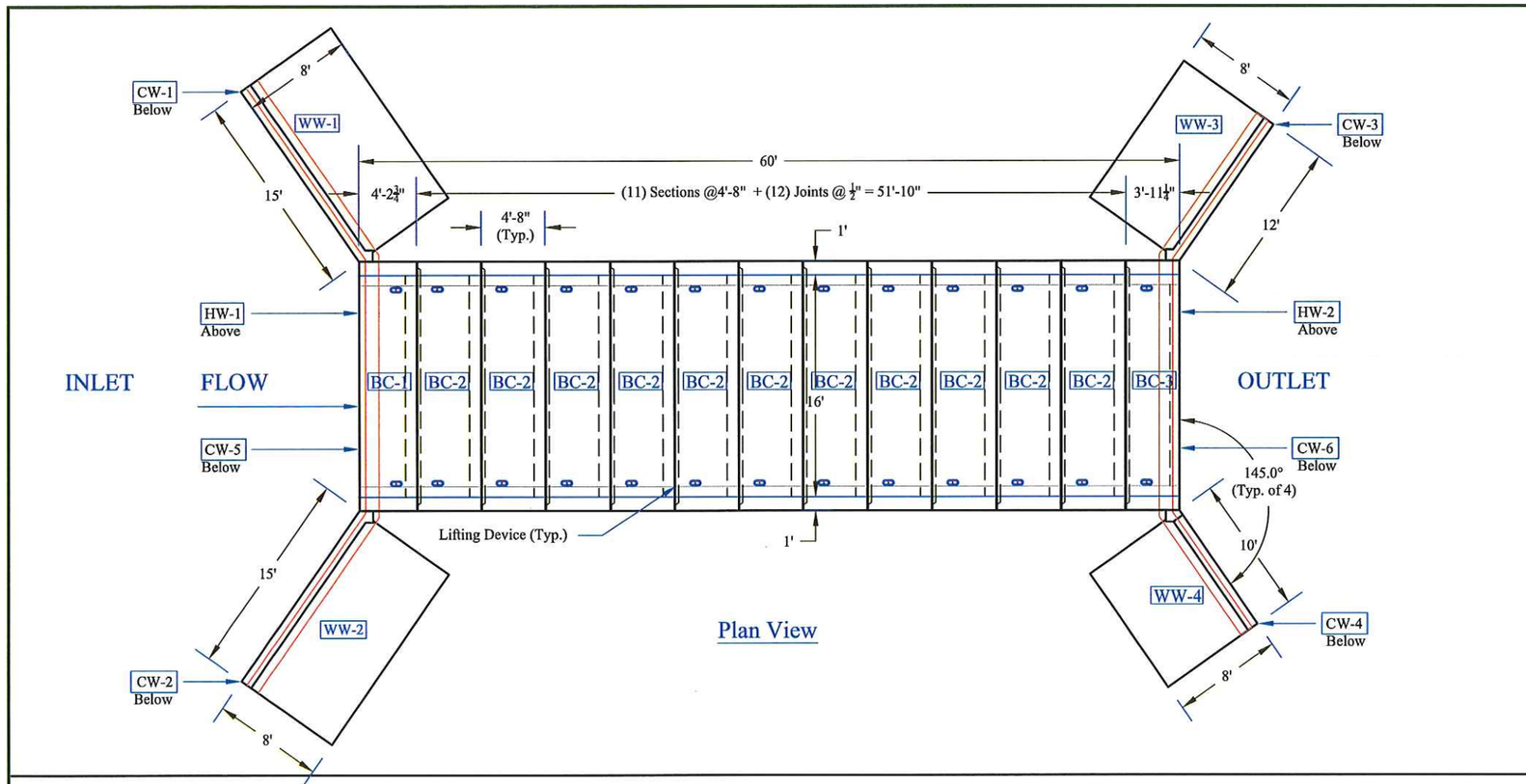

Plan View

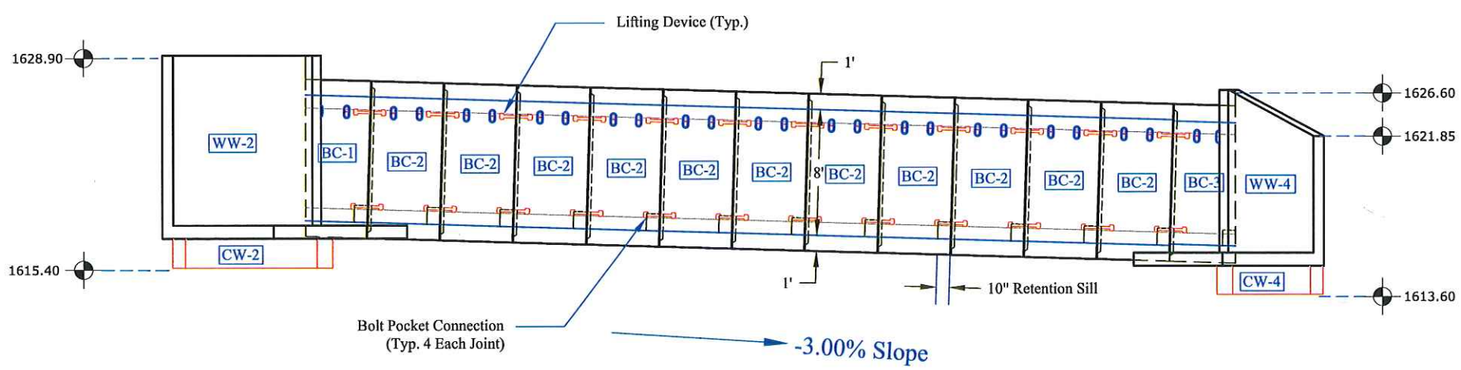

Side Elevation View

Table of Units				
Name	Qty	Length	Vol.(CY)	Wt.(lbs.)*
BC-1**	1	4'-1"	9.37	37,480
BC-2*	11	4'-8"	9.57	38,280
BC-3**	1	4'-1"	9.10	36,400
WW-1	1	15'	9.29	37,160
WW-2	1	15'	9.29	37,160
WW-3	1	12'	7.25	29,000
WW-4	1	10'	5.39	21,600
CW-1	1	15'	.58	2300
CW-2	1	15'	.58	2300
CW-3	1	12'	.47	1900
CW-4	1	10'	.40	1600
CW-5	1	18'	.67	2700
CW-6	1	18'	.67	2700

* Baffle Weight Included in BC-2
** Baffle and Headwall Included in BC-1 and BC-3

STATE OF VERMONT
WILLIAM A. NOURSE
NO. 74452
Structural II
LICENSED
PROFESSIONAL ENGINEER

Culvert Specifications	
Inside Dimensions	8'-0"x16'-0"
Waterway Area	96 Sq. Ft.
Top Slab Thickness	12"
Side Wall Thickness	12"
Bottom Slab Thickness	12"

CONTRACTORS VTSPE:

- Ⓐ 2"Ø PVC Sleeve
- Ⓑ 4"Ø PVC Sleeve
- Ⓒ Mechanical Bolt Pocket (A.L. Patterson w/ 1"Ø Coil Rod)
- Ⓓ Oxford A750-7 Lifting Device
- Ⓔ 1"Øx12" CX-9 Coil Loop Insert
- Ⓕ Patterson Bolt Pocket Former
- Ⓖ 1 1/2" x 3 1/2" Continuous Keyway
- Ⓗ Solid Lines Indicate ¾" Chamfer
- Ⓘ ⅝" FI 64 Ferrule Insert

PRECAST CONCRETE BOX CULVERT SHOP DRAWINGS (SDI JOB #14213)

SUPERVISOR: M. WHEELER
DETAILER: I. ADAMS
CHECKER: T. Dudley
ENGINEER:

PROJECT NAME: Wilmington
PROJECT #: STP 013-1(14)
LOCATION: Wilmington, VT

M&M Excavating
PO Box 585
Chester, VT 05143
Ph: (802) 875-3319

FABRICATOR:
193 INDUSTRIAL AVE.
WILLISTON, VT 05495
Ph: (802) 658-0201

SD Ireland PRECAST

04/29/2014 | PLAN_AND_ELEVATION | 2_OF_6

BC-1 Detail

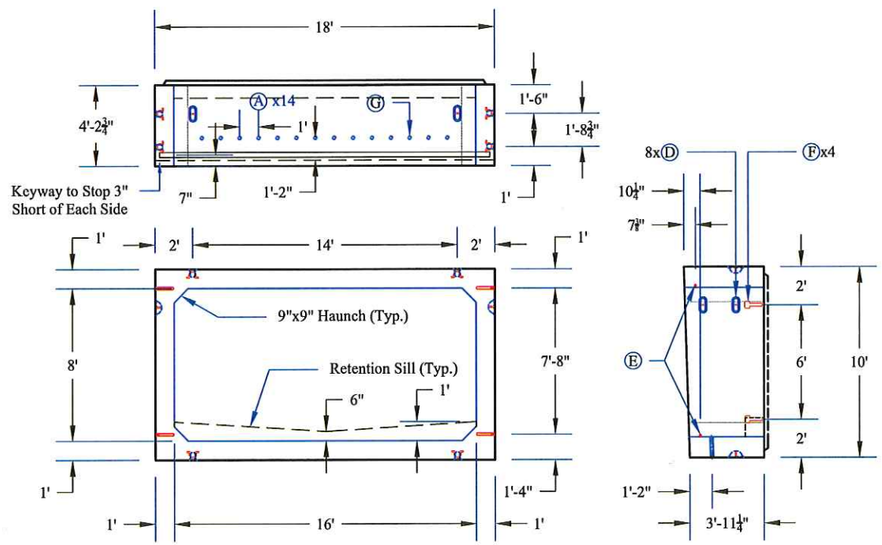

BC-2 Detail

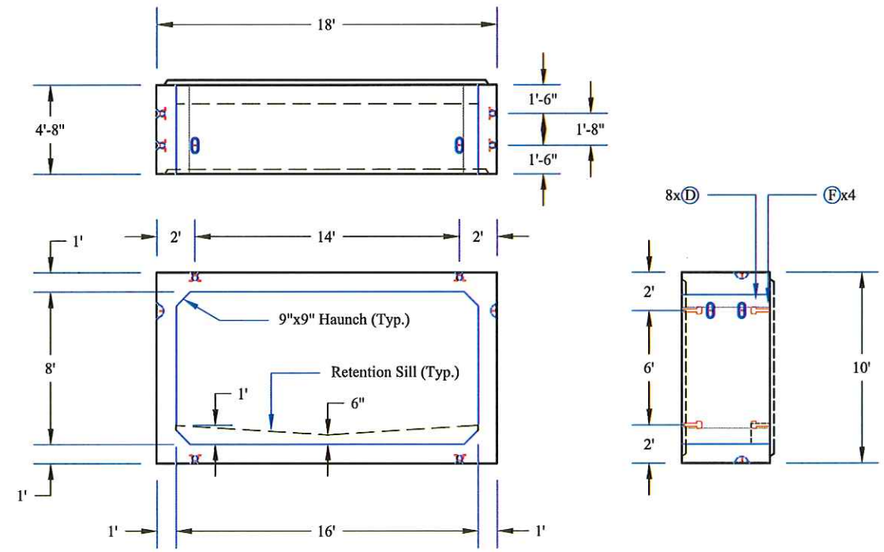

BC-3 Detail

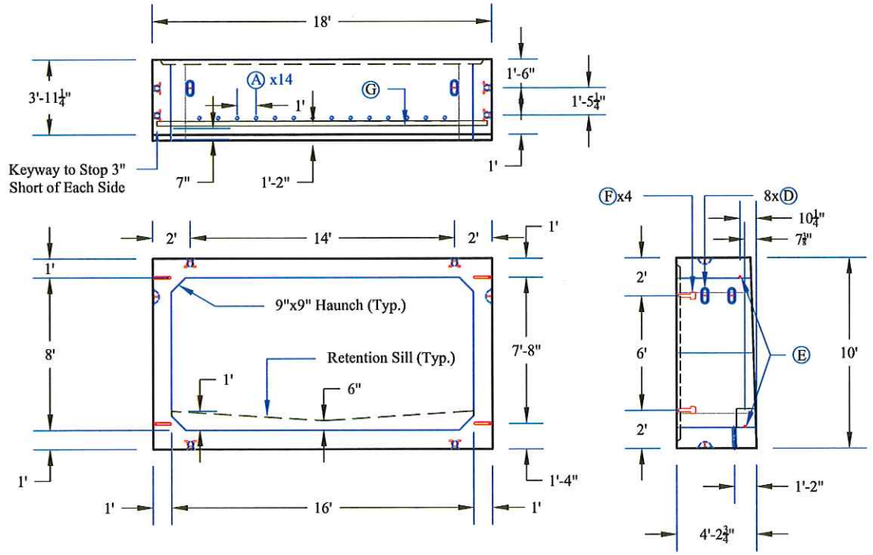

Box Reinforcing Detail

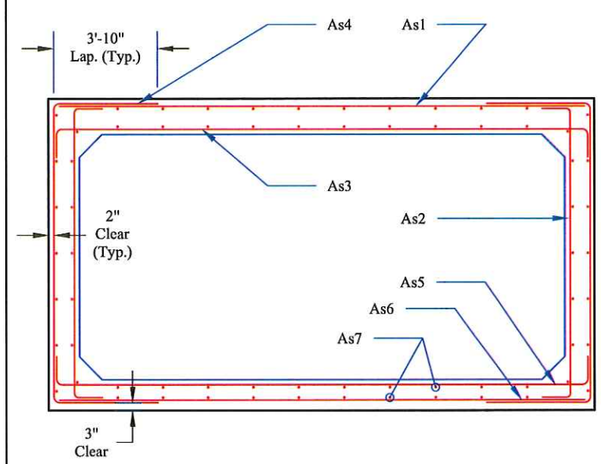

Rebar Schedule							
Mark	Size	Max Spacing	Length	Type	A	B	C
As1	#4	18"	212"	Str	212"		
As2	#4	18"	127"	Bent	6"	115"	6"
As3	#6	6"	230"	Bent	9"	212"	9"
As4	#6	6"	207"	Bent	46"	115"	46"
As5	#6	8"	228"	Bent	8"	212"	8"
As6	#4	18"	212"	Str	212"		
As7	#4	18"	Varies	Str	Varies		

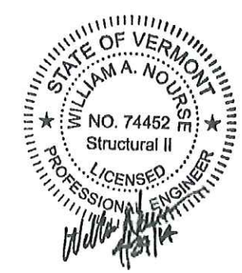

CONTRACTORS VISPE:

- Ⓐ 2"Ø PVC Sleeve
- Ⓑ 4"Ø PVC Sleeve
- Ⓒ Mechanical Bolt Pocket (A.L. Patterson w/ 1"Ø Coil Rod)
- Ⓓ Oxford A750-7 Lifting Device
- Ⓔ 1"Øx12" CX-9 Coil Loop Insert
- Ⓕ Patterson Bolt Pocket Former
- Ⓖ 1 1/2" x 3 1/2" Continuous Keyway
- Ⓗ Solid Lines Indicate ¾" Chamfer
- Ⓘ ⅝" FI 64 Ferrule Insert

PRECAST CONCRETE BOX CULVERT SHOP DRAWINGS (SDI JOB #14213)

SUPERVISOR: M. WHEELER
DETAILER: I. ADAMS
CHECKER: T. Dudley
ENGINEER:

PROJECT NAME: Wilmington
PROJECT #: STP 013-1(14)
LOCATION: Wilmington, VT

M&M Excavating
PO Box 585
Chester, VT 05143
Ph: (802) 875-3319

FABRICATOR:
193 INDUSTRIAL AVE.
WILLISTON, VT 05495
Ph: (802) 658-0201

SD Ireland PRECAST

04/29/2014 | BOX_SECTIONS | 3_OF_6

WW-1 Detail

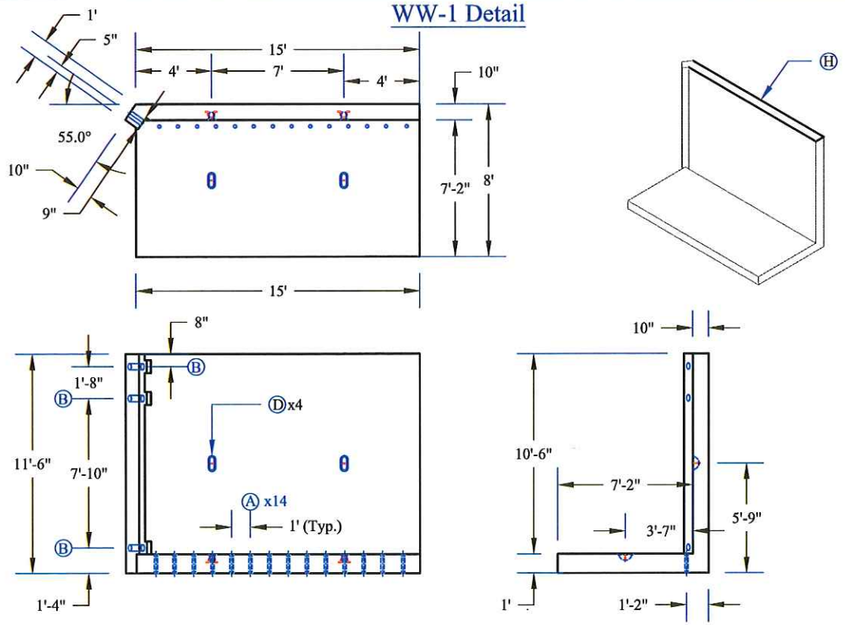

WW-2 Detail

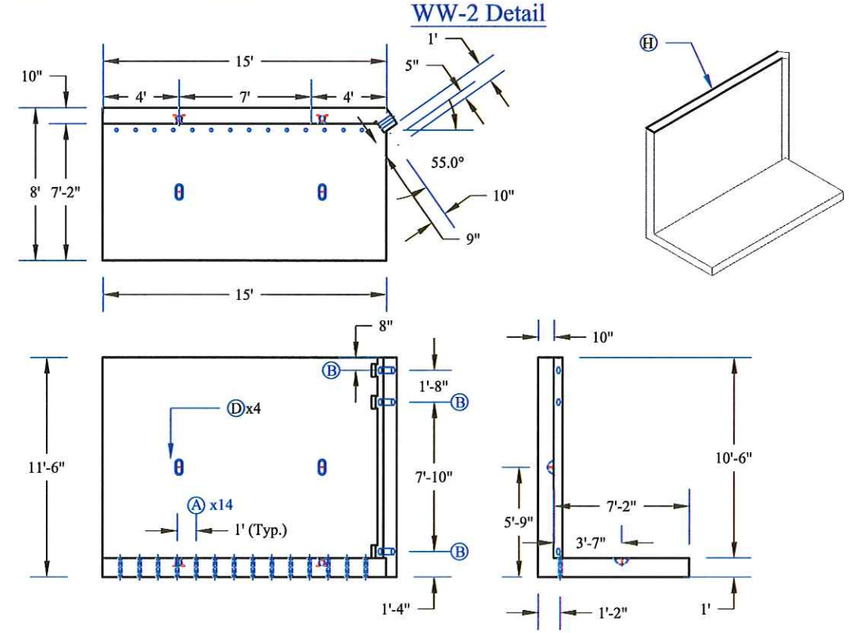

WW-3 Detail

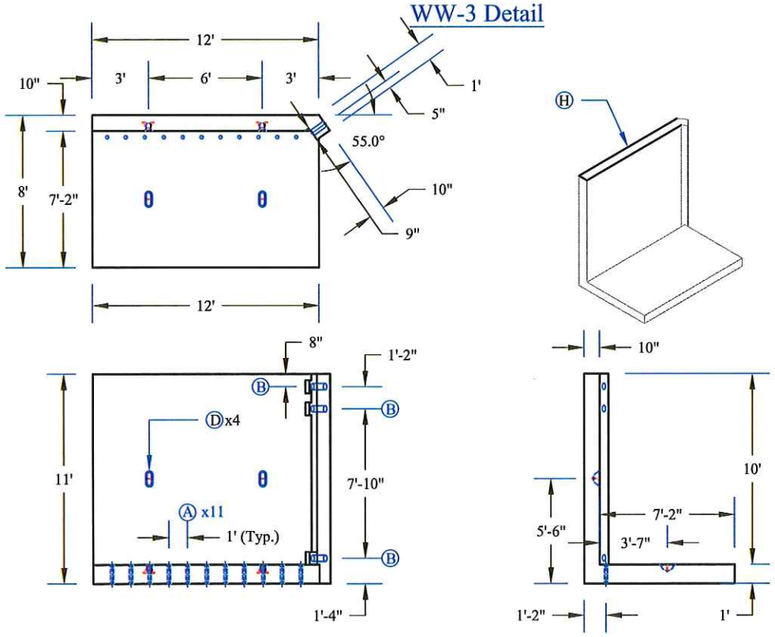

WW-4 Detail

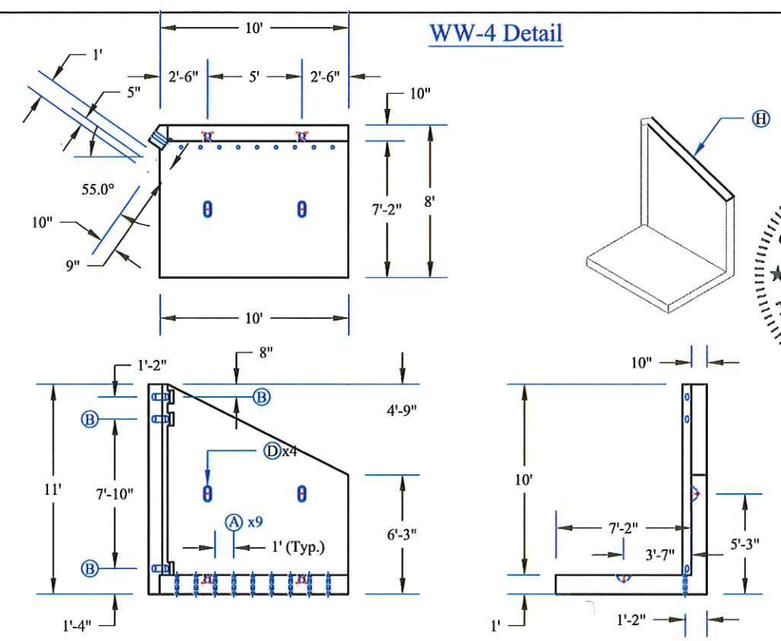

STATE OF VERMONT
WILLIAM A. NOURSE
NO. 74452
Structural II
LICENSED
PROFESSIONAL ENGINEER

CONTRACTORS VTSPE:

- Ⓐ 2"Ø PVC Sleeve
- Ⓑ 4"Ø PVC Sleeve
- Ⓒ Mechanical Bolt Pocket (A.L. Patterson w/ 1"Ø Coil Rod)
- Ⓓ Oxford A750-7 Lifting Device
- Ⓔ 1"Øx12" CX-9 Coil Loop Insert
- Ⓕ Patterson Bolt Pocket Former
- Ⓖ 1 1/2" x 3 1/2" Continuous Keyway
- Ⓗ Solid Lines Indicate ¾" Chamfer
- Ⓘ ⅝" FI 64 Ferrule Insert

PRECAST CONCRETE BOX CULVERT SHOP DRAWINGS (SDI JOB #14213)

SUPERVISOR: M. WHEELER
DETAILER: I. ADAMS
CHECKER: T. Dudley
ENGINEER:

PROJECT NAME: Wilmington
PROJECT #: STP 013-1(14)
LOCATION: Wilmington, VT

M&M Excavating
PO Box 585
Chester, VT 05143
Ph: (802) 875-3319

FABRICATOR:
193 INDUSTRIAL AVE.
WILLISTON, VT 05495
Ph: (802) 658-0201

SD Ireland PRECAST

04/29/2014 | WINGWALLS | 4_OF_6

CW-1 Detail

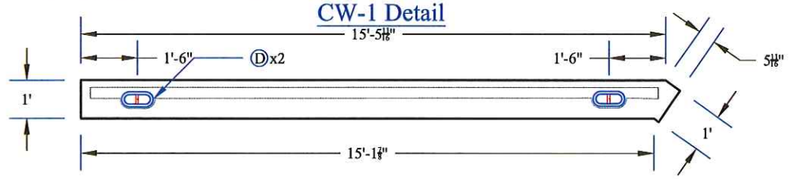

CW-2 Detail

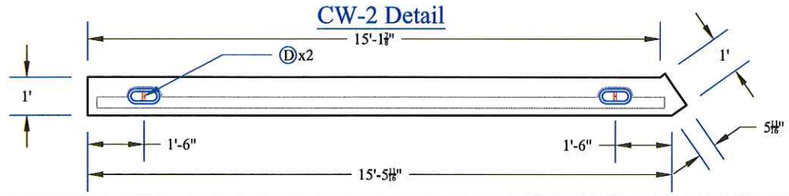

CW-3 Detail

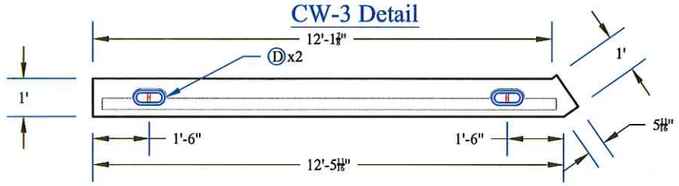

CW-4 Detail

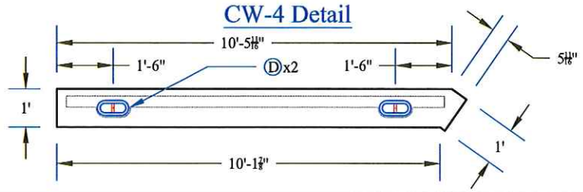

CW-5/6 Detail

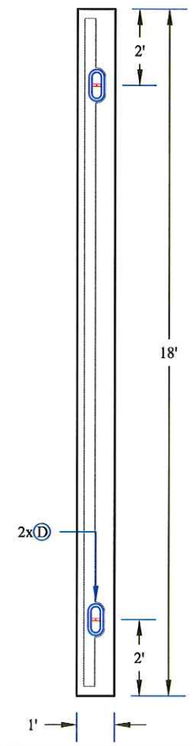

HW-1 Detail (Inlet)

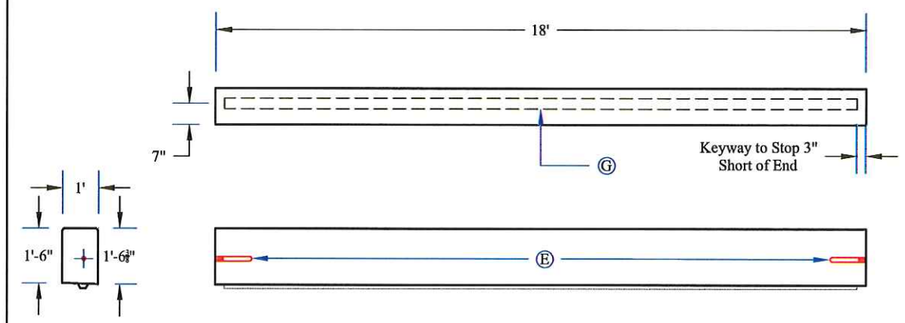

HW-2 Detail (Outlet)

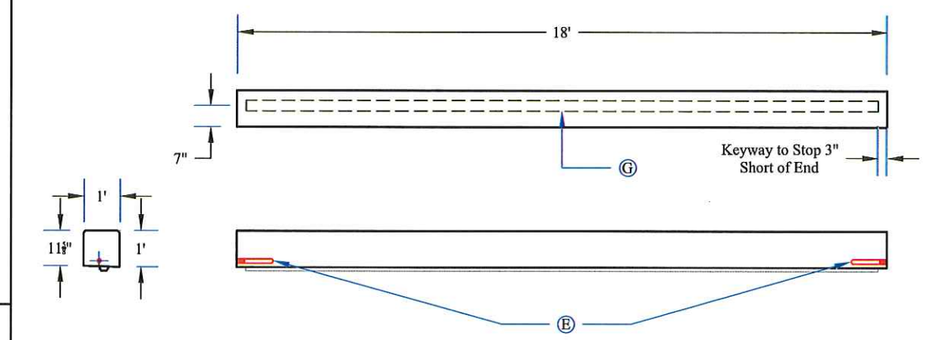

Headwall Isometric Detail

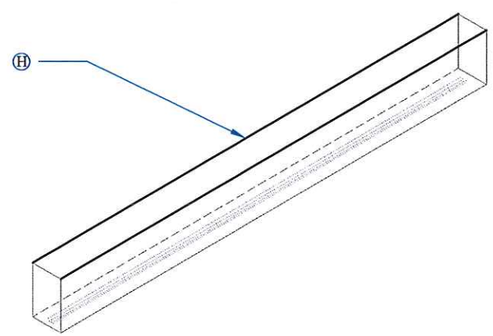

CW-1 thru CW-4 Section Detail

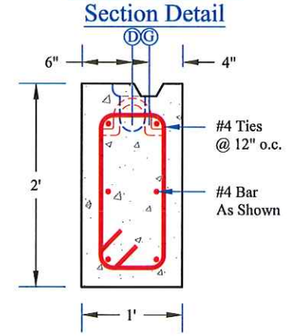

CW-5 (Inlet) Section Detail

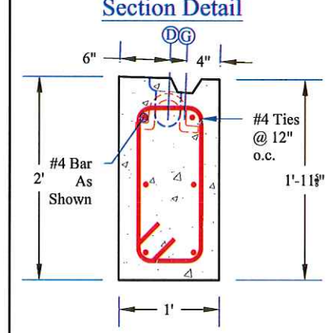

CW-6 (Outlet) Section Detail

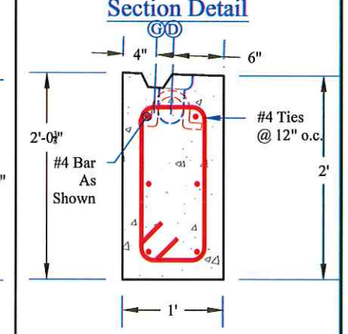

STATE OF VERMONT
WILLIAM A. NOURSE
NO. 74452
Structural II
LICENSED
PROFESSIONAL ENGINEER

CONTRACTORS VTSPE:

- Ⓐ 2"Ø PVC Sleeve
- Ⓑ 4"Ø PVC Sleeve
- Ⓒ Mechanical Bolt Pocket (A.L. Patterson w/ 1"Ø Coil Rod)
- Ⓓ Oxford A750-7 Lifting Device
- Ⓔ 1"Øx12" CX-9 Coil Loop Insert
- Ⓕ Patterson Bolt Pocket Former
- Ⓖ 1 1/2" x 3 1/2" Continuous Keyway
- Ⓗ Solid Lines Indicate ¾" Chamfer
- Ⓘ ⅝" FI 64 Ferrule Insert

PRECAST CONCRETE BOX CULVERT SHOP DRAWINGS (SDI JOB #14213)

SUPERVISOR: M. WHEELER
DETAILER: I. ADAMS
CHECKER: T. Dudley
ENGINEER:

PROJECT NAME: Wilmington
PROJECT #: STP 013-1(14)
LOCATION: Wilmington, VT

M&M Excavating
PO Box 585
Chester, VT 05143
Ph: (802) 875-3319

FABRICATOR:
193 INDUSTRIAL AVE.
WILLISTON, VT 05495
Ph: (802) 658-0201

SD Ireland PRECAST

04/29/2014 | CUTOFF/HEADWALLS | 5_OF_6

Retention Sill Detail

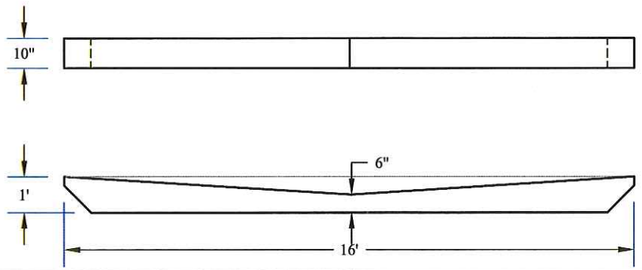

Wingwall Reinforcing Detail

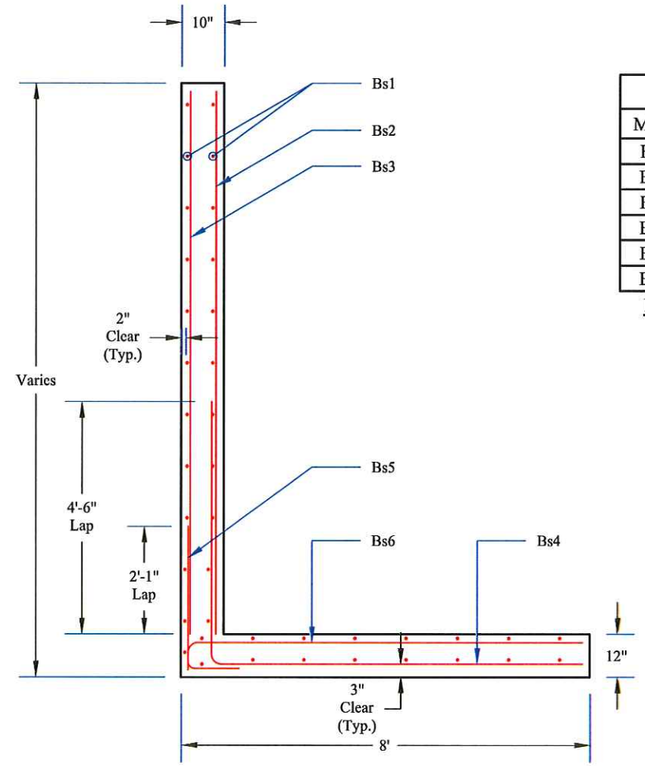

Rebar Schedule						
Mark	Size	Max Spacing	Length	Type	A	B
Bs1	#4	18"	Varies	Str	Varies	
Bs2	#4	12"	Varies	Str	Varies	
Bs3	#4	12"	Varies	Str	Varies	
Bs4	#6	8"	149"	Bent	86"	63"
Bs5	#4	12"	47"	Bent	12"	35"
Bs6	#6	8"	99"	Str	92"	7"

Notes: 2" Clear Typical Unless Noted Otherwise

Bent Bar Dimension Guide

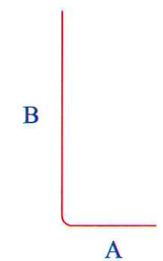

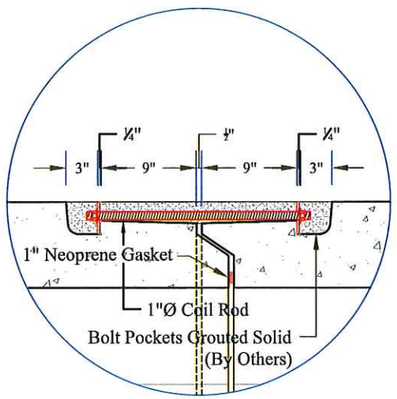

Bolt Pocket Connection Detail

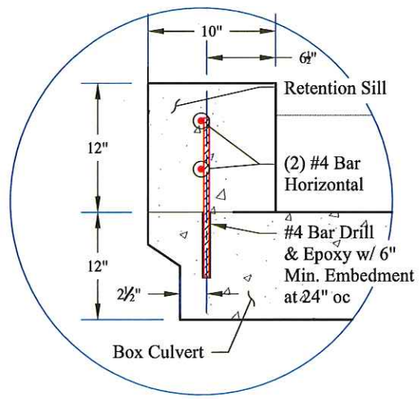

Retention Sill Reinforcing Detail

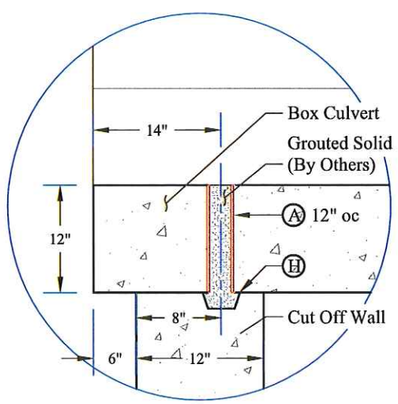

Culvert to Cut Off Wall Connection

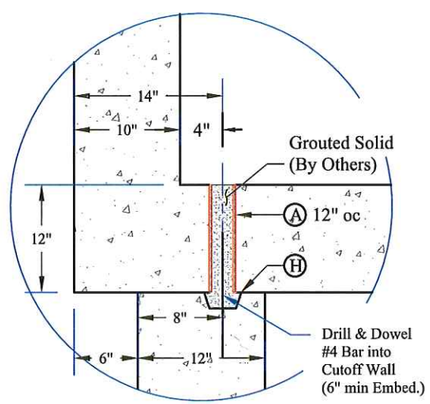

Wing Wall to Cut Off Wall Connection

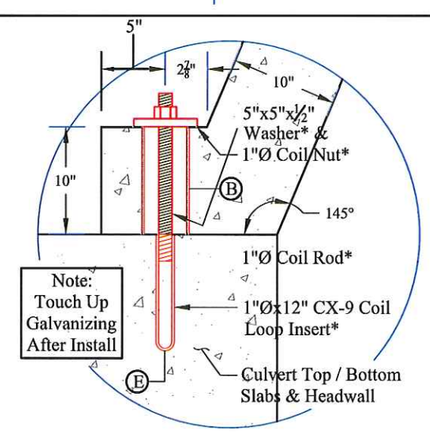

Wing Wall to Box Culvert Connection

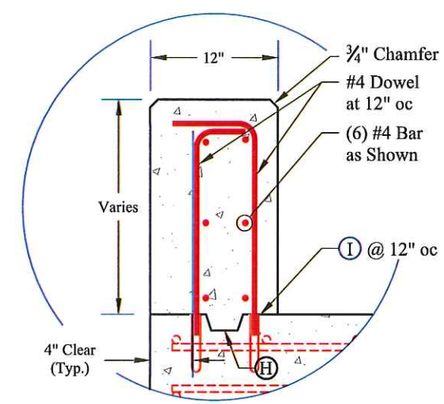

Head Wall - 1 to Box Culvert Connection

STATE OF VERMONT
WILLIAM A. NOURSE
NO. 74452
Structural II
LICENSED
PROFESSIONAL ENGINEER

CONTRACTORS VTSPE:

- Ⓐ 2"Ø PVC Sleeve
- Ⓑ 4"Ø PVC Sleeve
- Ⓒ Mechanical Bolt Pocket (A.L. Patterson w/ 1"Ø Coil Rod)
- Ⓓ Oxford A750-7 Lifting Device
- Ⓔ 1"Øx12" CX-9 Coil Loop Insert
- Ⓕ Patterson Bolt Pocket Former
- Ⓖ 1 1/2" x 3 1/2" Continuous Keyway
- Ⓗ Solid Lines Indicate ¾" Chamfer
- Ⓘ ⅝" FI 64 Ferrule Insert

PRECAST CONCRETE BOX CULVERT SHOP DRAWINGS (SDI JOB #14213)

SUPERVISOR: M. WHEELER
DETAILER: I. ADAMS
CHECKER: T. Dudley
ENGINEER:

PROJECT NAME: Wilmington
PROJECT #: STP 013-1(14)
LOCATION: Wilmington, VT

M&M Excavating
PO Box 585
Chester, VT 05143
Ph: (802) 875-3319

FABRICATOR:
193 INDUSTRIAL AVE.
WILLISTON, VT 05495
Ph: (802) 658-0201

SD Ireland PRECAST

04/29/2014 | CONNECTIONS | 6_OF_6

ENGINEERING VENTURES INC

208 Flynn Avenue, Suite 2A, Burlington, VT 05401 · Tel: 802-863-6225 · Fax: 802-863-6306
85 Mechanic Street, Suite 350A, Lebanon, NH 03766 · Tel: 603-442-9333 · Fax: 603-442-9331

Design Calculations

For:

Wilmington VT Rt 100 (Bridge 47)
Culvert
Wilmington, VT

For:

S.D. Ireland

Submitted On:

April 24, 2014

For Approval

STATE OF VERMONT
WILLIAM A. NOURSE
NO. 74452
Structural II
LICENSED
PROFESSIONAL ENGINEER
4/24/14

Index | Page

Basis of Design..... 1-2
Computer Output..... 3-4
Box Culvert Design and Results..... 6-12
Headwall Design and Results..... 13-14
Cutoff Wall Design and Results..... 14
Wing Wall Design and Results..... 15-17

ENGINEERING VENTURES INC
208 Flynn Avenue, Suite 2A
Burlington, VT 05401
tel. 802.863.6225
fax 802.863.6306

85 Mechanic Street, Suite 350A
Lebanon, NH 03766
tel. 603.442.9333
fax 603.442.9331

BASIS OF DESIGN

Referenced Drawings and Documents:

- VTrans Proposed Improvement Bridge Project VT Route 100 Bridge 47 drawings dated January 2, 2014; VTrans Special Provisions dated February 3, 2014; VTrans Specifications dated December 3, 2013.

Referenced Codes:

- AASHTO LRFD Bridge Design Specifications 2010; Fifth Edition
- State of Vermont, Agency of Transportation Design Manual 2010

Loading Required:

- Traffic: HL-93

General Design Parameters:

- $\gamma_{soil} = 135$ pcf
- $\gamma_{concrete} = 150$ pcf
- $\varphi = 30°$ *
- $K_A = \tan^2(45° - \varphi/2) = 0.333$
- $K_P = \tan^2(45° + \varphi/2) = 3.00$
- $K_0 = 1 - \sin(\varphi) = 0.50$
- Allowable bearing resistance = 4000 psf
- Resistance factor, $\phi = 0.40$ (AASHTO Table 10.5.5.2.4-1)
- $f'_c = 6$ ksi
- $f_y = 60$ ksi
- Reinforcing Tolerances: +/- 1" Spacing, +/- ¼" Clearance
- 2" reinforcement cover, unless noted otherwise
- General Load Combination Factors: (AASHTO 3.22)
  - DL = 1.25/0.9
  - EL = 1.35/1.0
  - LL = 1.75

* Soil assumption assumed and to be verified by EOR.

ENGINEERING VENTURES INC
208 Flynn Avenue, Suite 2A
Burlington, VT 05401
tel. 802.863.6225
fax 802.863.6306

85 Mechanic Street, Suite 350A
Lebanon, NH 03766
tel. 603.442.9333
fax 603.442.9331

Basis of Design – Culvert:

Loads:

Box Culvert:

Vertical Earth Load (at top of box) = (depth of fill = 1.5')(135 pcf) = 203 psf
Lateral Earth Load (at top of box) = 0.5(1.5')(135 pcf) = 101 psf
Lateral Earth Load (at base of box) = 0.5(1.5'+ 10'-0")(135 pcf) = 776 psf

Dead Load = self weight

Live Loads:
Lane Load = .064 ksf
AASHTO HL-93 Truck – 8 k and 32 k axle loads, 14 ft apart*
AASHTO HL-93 Tandem – (2) 24 k axle loads 4 ft apart*

*Loads applied to maximize stresses for design

Additional Factors:

Multipresence Factor, m = 1.2 (AASHTO 3.6.1.1.2)
$IM = 33(1.0-0.125D_E) \geq 0\% \rightarrow 33(1.0-0.125(1.5')) = 27 > 0\%$
IM = 1.27
(AASHTO 3.6.2.2)

Wheel Load Distribution: (AASHTO 3.6.1.2.6 and 4.6.2.10)

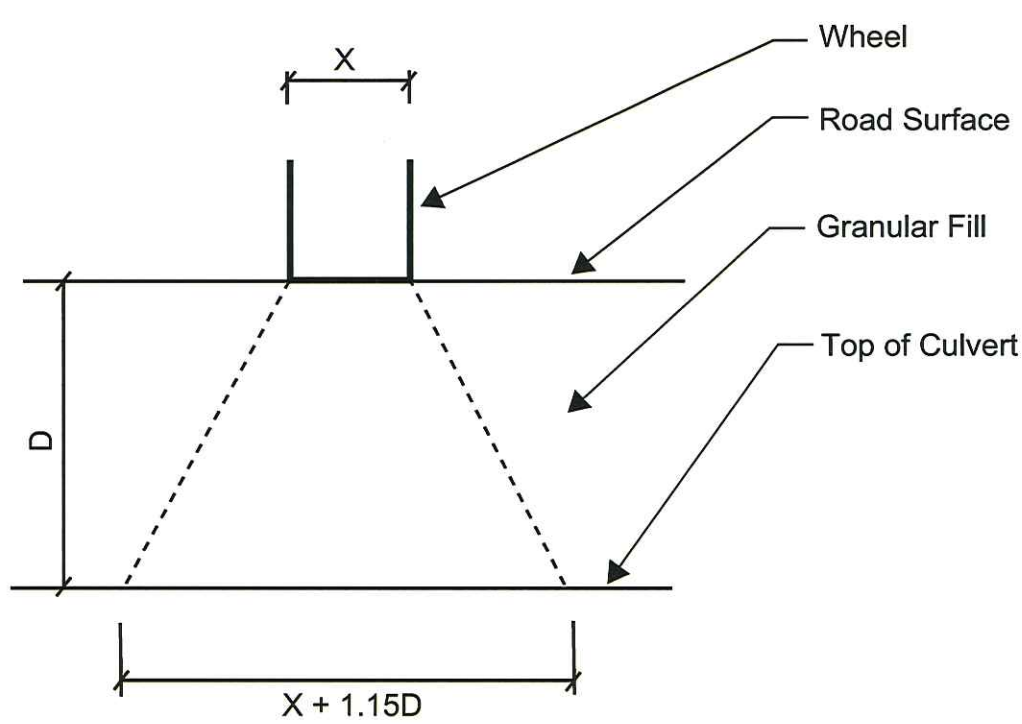

X = Wheel Width (10" or 20" AASHTO 3.6.1.2.5)

ENGINEERING VENTURES INC
208 Flynn Avenue, Suite 2A
Burlington, VT 05401
tel. 802.863.6225
fax 802.863.6306

85 Mechanic Street, Suite 350A
Lebanon, NH 03766
tel. 603.442.9333
fax 603.442.9331

Computer Output:

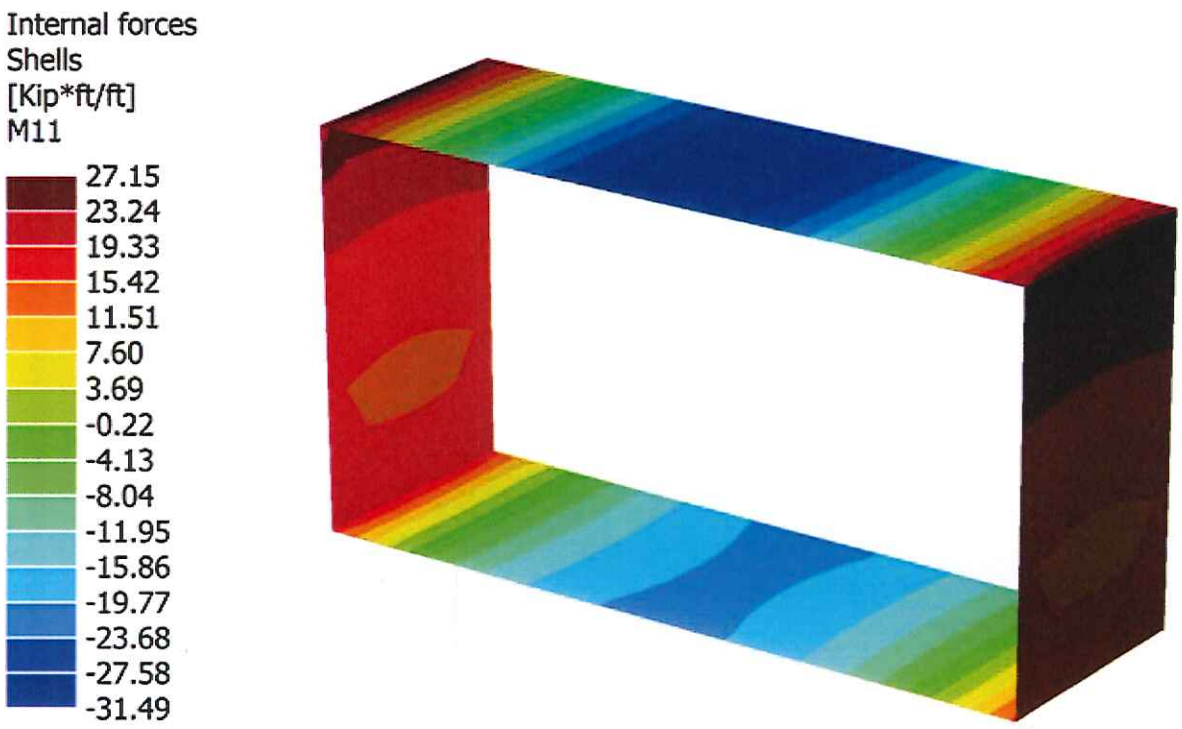

Maximum Strength Moment Load Combination:

Strength III Tandem Moment Load Combination

Top Slab:
M_u = +27.2 k-ft/ft/-31.5 k-ft/ft

Bottom Slab:
M_u = +18.8 k-ft/ft/-20.7 k-ft/ft

Wall Slabs:
M_u = +27.2 k-ft/ft/+15.1 k-ft/ft

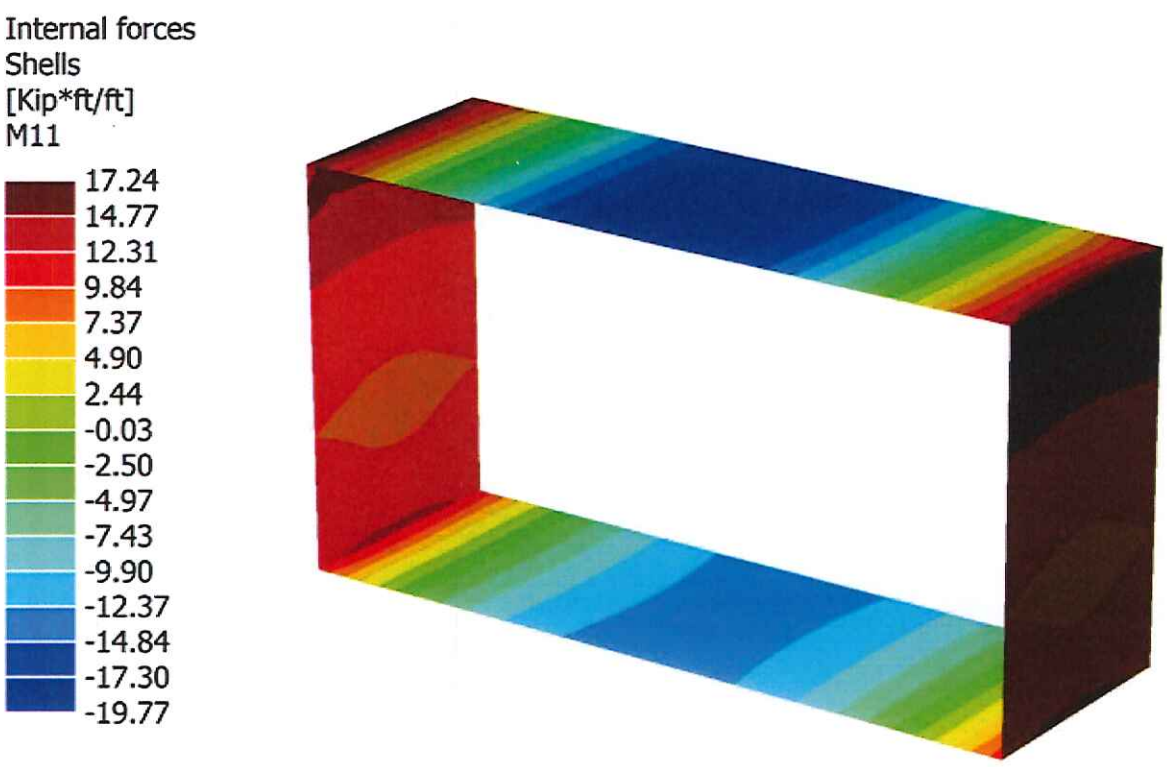

Maximum Service Moment Load Combination:

Service III Tandem Moment Load Combination

Top Slab:
M_u = +17.2 k-ft/ft/-19.8 k-ft/ft

Bottom Slab:
M_u = +14.1 k-ft/ft/-13.7 k-ft/ft

Wall Slabs:
M_u = +17.2 k-ft/ft/+9.6 k-ft/ft

ENGINEERING VENTURES INC
208 Flynn Avenue, Suite 2A
Burlington, VT 05401
tel. 802.863.6225
fax 802.863.6306
85 Mechanic Street, Suite 350A
Lebanon, NH 03766
tel. 603.442.9333
fax 603.442.9331

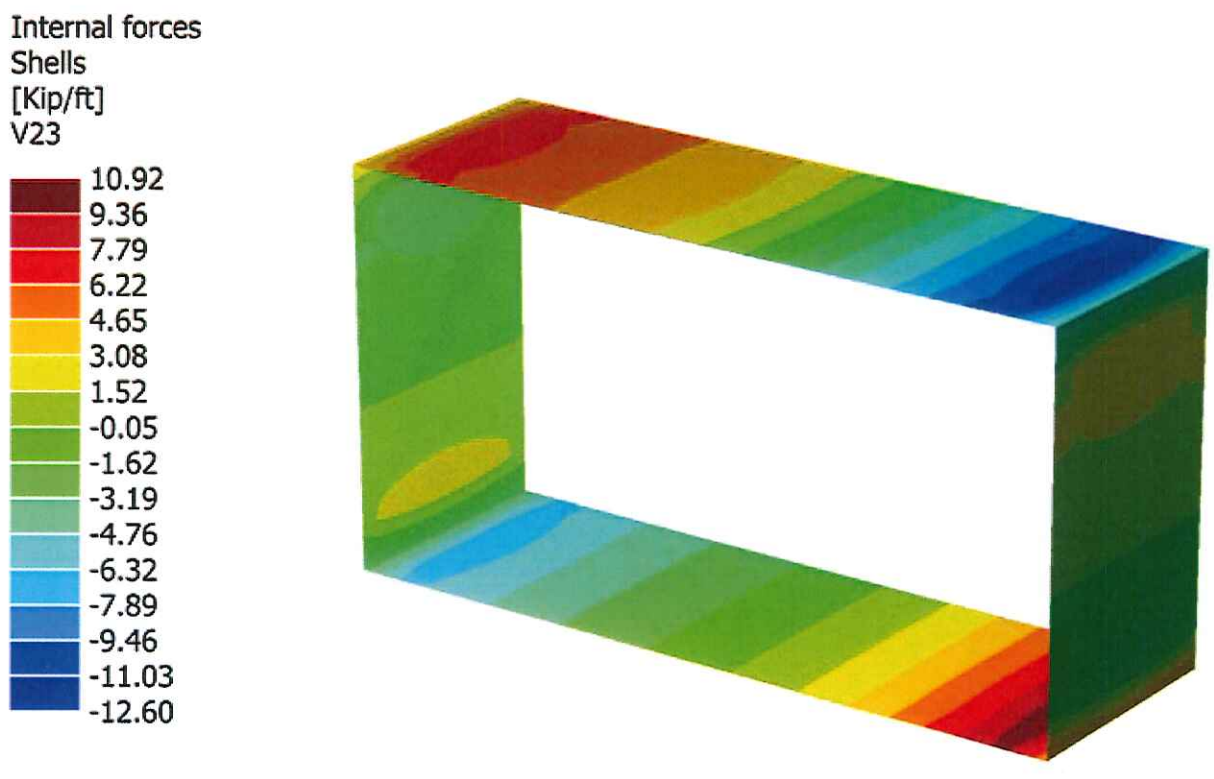

Maximum Strength Shear Load Combination:

Strength IIII Tandem Shear Load Combination

Top Slab:
V_u = +10.9 k/ft/-12.6 k/ft

Bottom Slab:
V_u = +10.9 k/ft/-7.7 k/ft

Wall Slabs:
V_u = +4.8 k/ft/-5.2 k/ft

Flexural Design

Top Slab: M_u = 27.2 k-ft/ft -- Controls

Minimum Flexural (AASTHO 5.7.3.3.2)

$1.33\ M_u$
$1.33(M_u) = 1.33(27.2\text{ k-ft/ft}) = 36.2\text{ k-ft/ft}$

-or-

$1.2M_{cr}$
$I_g = bd^3/12 = (12\text{ in})(12\text{ in})^3/12 = 1728\text{ in}^4$
$S_g = bd^2/6 = (12\text{ in})(12\text{ in})^2/6 = 288\text{ in}^3$
$f_r = 0.37\sqrt{f'_c} = 0.37(\sqrt{6}\text{ ksi}) = .906\text{ ksi}$
$1.2M_{cr} = 1.2(S_g)(f_r) = 1.2(288\text{ in}^3)(.906\text{ ksi}) = 313\text{ k-in} = 26.1\text{ k-ft} < 27.2\text{ k-ft}$

Try #6 at 7 in spacing

$A_s = .75\text{ in}^2$
$T = C = A_s{*}f_y = (.75\text{ in}^2)(60\text{ ksi}) = 45.3\text{ k}$
$a = A_s{*}f_y/(.85{*}f'_c{*}b) = (45.3\text{ k})/(.85{*}6\text{ ksi}{*}12\text{ in}) = 0.74\text{ in}$
$d = 12\text{ in} - 2\text{ in} - .75\text{ in}/2 = 9.625\text{ in}$
$M_r = \varphi M_n$
$\Phi = 0.90$
$M_r = \varphi A_s{*}\ f_y\ (d-a/2) = (0.90)(0.75\text{ in}^2)(60\text{ ksi})(9.625\text{ in} - (.74\text{ in}/2)) = 377\text{ k-in} =$ **31.4 k-ft > 27.2 k-ft/ft – OK**

Crack Control (AASHTO 5.7.3.4)

Try #6 at 7 in spacing

$\gamma_e = 0.75$ (Class 2)
$A_s = .75\text{ in}^2$
$a = A_s{*}f_y/(.85{*}f'_c{*}b) = (.75\text{ in}^2{*}60\text{ ksi})/(.85{*}6\text{ ksi}{*}12\text{ in}) = 0.74\text{ in}$
$f_{ss} = [M_u/(d-(a/2))]/A_s = [17.2\text{ k-ft/ft}(12\text{ in/ft})/(9.625\text{ in} - (.74\text{in}/2))]/0.75\text{ in}^2 = 29.7\text{ ksi}$
$d_c = 2\text{ in} + .75/2 = 2.375\text{ in}$
$\beta = 1 + d_c/(0.7(h - d_c) = 1 + 2.375\text{ in}/(0.7(12\text{ in} - 2.375\text{ in})) = 1.35$
$S \leq (700{*}\gamma_e)/(\beta{*}\ f_{ss}) - 2d_c = (700{*}0.75)/(1.35{*}29.7\text{ ksi}) - (2)(2.375\text{ in}) =$ **8.34 in > 7 in - OK**

Therefore use #6 at 7 in OC

Temperature and Shrinkage (AASHTO 5.10.8)

$A_{sT\&S} = 1.30(b)(h)/(2)(b + h)f_y = 1.30(12\text{ in})(12\text{ in})/(2(12\text{ in} + 12\text{ in})(60\text{ksi})) = .065\text{ in}^2$
$0.11 < A_{sT\&S} < 0.6 - 0.11\text{ in}^2$ controls

Provide minimum of #4 bar at 18 in OC, $A_s = 0.133\text{ in}^2/\text{ft}$

Top Slab: $M_u = -31.5$ k-ft/ft -- Controls

Minimum Flexural (AASTHO 5.7.3.3.2)

$1.33\ M_u$
$1.33(M_u) = 1.33(31.5\text{ k-ft/ft}) = 41.9\text{ k-ft/ft}$

-or-

$1.2M_{cr}$
$I_g = bd^3/12 = (12\text{ in})(12\text{ in})^3/12 = 1728\text{ in}^4$
$S_g = bd^2/6 = (12\text{ in})(12\text{ in})^2/6 = 288\text{ in}^3$
$f_r = 0.37\sqrt{f'_c} = 0.37(\sqrt{6}\text{ ksi}) = .906\text{ ksi}$
$1.2M_{cr} = 1.2(S_g)(f_r) = 1.2(288\text{ in}^3)(.906\text{ ksi}) = 313\text{ k-in} = 26.1\text{ k-ft} < 31.5\text{ k-ft}$

Try #6 at 6 in spacing

$A_s = .88\text{ in}^2$
$T = C = A_s{*}f_y = (.88\text{ in}^2)(60\text{ ksi}) = 52.8\text{ k}$
$a = A_s{*}f_y/(.85{*}f'_c{*}b) = (52.8\text{ k})/(.85{*}6\text{ ksi}{*}12\text{ in}) = 0.86\text{ in}$
$d = 12\text{ in} - 2\text{ in} - .75\text{ in}/2 = 9.625\text{ in}$
$M_r = \varphi M_n$
$\Phi = 0.90$
$M_r = \varphi A_s{*}\ f_y\ (d\text{-}a/2) = (0.90)(0.88\text{ in}^2)(60\text{ ksi})(9.625\text{ in} - (.86\text{ in}/2)) = 437\text{ k-in} =$ **36.4 k-ft > 31.5 k-ft/ft – OK**

Crack Control (AASHTO 5.7.3.4)

Try #6 at 6 in spacing

$\gamma_e = 0.75$ (Class 2)
$A_s = .88\ in^2$
$a = A_s*f_y/(.85*f'_c*b) = (.88\ in^2*60\ ksi)/(.85*6\ ksi*12\ in) = 0.86\ in$
$f_{ss} = [M_u/(d-(a/2))]/A_s = [19.8\ k\text{-}ft/ft(12\ in/ft)\ /(9.625\ in - (.86in/2))]/0.88\ in^2 = 29.4\ ksi$
$d_c = 2\ in + .75/2 = 2.375\ in$
$\beta = 1 + d_c/(0.7(h - d_c) = 1 + 2.375\ in/(0.7(12\ in - 2.375\ in)) = 1.35$
$S \leq (700*\gamma_e)/(\beta*\ f_{ss}) - 2d_c = (700*0.75)/(1.35*29.4\ ksi) - (2)(2.375\ in) =$ **8.5 in > 6 in - OK**

Therefore use #6 at 6 in OC

Temperature and Shrinkage (AASHTO 5.10.8)

$A_{sT\&S} = 1.30(b)(h)/(2)(b + h)f_y = 1.30(12\ in)(12\ in)/(2(12\ in + 12\ in)(60ksi)) = .065\ in^2$
$0.11 < A_{sT\&S} < 0.6 - 0.11\ in^2$ controls

Provide minimum of #4 bar at 18 in OC, $A_s = 0.133\ in^2/ft$

Cutoff reinforcing in slab

At approximately 2.25 ft, $M_u = 0$ k-ft/ft. Per ACI 12.10, extend h or $l_n/16$ – use 14". Extend bar minimum of 41".

Bottom Slab: $M_u = 18.8$ k-ft/ft

Minimum Flexural (AASHTO 5.7.3.3.2)

$1.33\ M_u$
$1.33(M_u) = 1.33(18.8\ k\text{-}ft/ft) = 25.0\ k\text{-}ft/ft$
-or-

$1.2M_{cr}$
$I_g = bd^3/12 = (12\ in)(12\ in)^3/12 = 1728\ in^4$
$S_g = bd^2/6 = (12\ in)(12\ in)^2/6 = 288\ in^3$
$f_r = 0.37\sqrt{f'_c} = 0.37(\sqrt{6}\ ksi) = .906\ ksi$
$1.2M_{cr} = 1.2(S_g)(f_r) = 1.2(288\ in^3)(.906\ ksi) = 313\ k\text{-}in = 26.1\ k\text{-}ft >$ **25.0 k-ft/ft Controls**

Try #6 at 6 in spacing

$A_s = .88\ in^2$
$T = C = A_s*f_y = (.88\ in^2)(60\ ksi) = 52.8\ k$

$a = A_s*f_y/(.85*f'_c*b) = (52.8\ k)/(.85*6\ ksi*12\ in) = 0.86\ in$
$d = 12\ in - 3\ in - .75\ in/2 = 8.625\ in$ (3" clear on bottom)
$M_r = \varphi M_n$
$\Phi = 0.90$
$M_r = \varphi A_s*\ f_y\ (d-a/2) = (0.90)(0.88\ in^2)(60\ ksi)(8.625\ in - (.86\ in/2)) = 389\ k\text{-}in =$ **32.4 k-ft >**
25.0 k-ft/ft – OK

<u>Crack Control (AASHTO 5.7.3.4)</u>

Try #6 at 6 in spacing

$\gamma_e = 0.75$ (Class 2)
$A_s = .88\ in^2$
$a = A_s*f_y/(.85*f'_c*b) = (.88\ in^2*60\ ksi)/(.85*6\ ksi*12\ in) = 0.86\ in$
$f_{ss} = [M_u/(d-(a/2))]/A_s = [14.1\ k\text{-}ft/ft(12\ in/ft)\ /(8.625\ in - (.86in/2))]/0.88\ in^2 = 23.5\ ksi$
$d_c = 3\ in + .75/2 = 3.375\ in$
$\beta = 1 + d_c/(0.7(h - d_c) = 1 + 3.375\ in/(0.7(12\ in - 3.375\ in)) = 1.56$
$S \leq (700*\gamma_e)/(\beta*\ f_{ss}) - 2d_c = (700*0.75)/(1.56*23.5\ ksi) - (2)(3.375\ in) =$ **7.6 in > 6 in - OK**

Therefore use #6 at 6 in OC

Bottom Slab: M_u = -20.7 k-ft/ft

<u>Minimum Flexural (AASTHO 5.7.3.3.2)</u>

$1.33\ M_u$
$1.33(M_u) = 1.33(20.7\ k\text{-}ft/ft) = 27.5\ k\text{-}ft/ft$

-or-

$1.2M_{cr}$
$I_g = bd^3/12 = (12\ in)(12\ in)^3/12 = 1728\ in^4$
$S_g = bd^2/6 = (12\ in)(12\ in)^2/6 = 288\ in^3$
$f_r = 0.37\sqrt{f'_c} = 0.37(\sqrt{6}\ ksi) = .906\ ksi$
$1.2M_{cr} = 1.2(S_g)(f_r) = 1.2(288\ in^3)(.906\ ksi) = 313\ k\text{-}in =$ **26.1 k-ft** < 27.5 k-ft – **Controls**

Try #6 at 8 in spacing

$A_s = .66\ in^2$
$T = C = A_s*f_y = (.66\ in^2)(60\ ksi) = 39.6\ k$

$a = A_s*f_y/(.85*f'_c*b) = (39.6\ k)/(.85*6\ ksi*12\ in) = 0.65\ in$
$M_r = \varphi M_n$
$\Phi = 0.90$
$M_r = \varphi A_s*\ f_y\ (d-a/2) = (0.90)(0.66\ in^2)(60\ ksi)(9.625\ in - (.65\ in/2)) = 331.5\ k\text{-}in =$ **27.6 k-ft >**
26.1 k-ft/ft – OK

Crack Control (AASHTO 5.7.3.4)

$\gamma_e = 0.75$ (Class 2)
$f_{ss} = [M_u/(d-(a/2))]/A_s = [13.7\ k\text{-}ft/ft(12\ in/ft)\ /(9.625in - (.65\ in/2))]/0.66\ in^2 = 26.8\ ksi$
$d_c = 2\ in + .75/2 = 2.375\ in$
$\beta = 1 + d_c/(0.7(h - d_c)) = 1 + 2.375\ in/(0.7(12\ in - 2.375\ in)) = 1.35$
$S \leq (700*\gamma_e)/(\beta*\ f_{ss}) - 2d_c = (700*0.75)/(1.35*26.8\ ksi) - (2)(2.375\ in) =$ **9.8 in > 8 in - OK**

Therefore use #6 at 8 in OC.

Temperature and Shrinkage (AASHTO 5.10.8)

$A_{sT\&S} = 1.30(b)(h)/(2)(b + h)f_y = 1.30(12\ in)(12\ in)/(2(12\ in + 12\ in)(60ksi)) = .065\ in^2$
$0.11 < A_{sT\&S} < 0.6 - 0.11\ in^2$ controls

Provide minimum of #4 bar at 18 in OC, $A_s = 0.133\ in^2/ft$

Wall Slab: $M_u = 27.2$ k-ft/ft -- Controls

Minimum Flexural (AASHTO 5.7.3.3.2)

$1.33\ M_u$
$1.33(M_u) = 1.33(27.2\ k\text{-}ft/ft) = 36.2\ k\text{-}ft/ft$

-or-

$1.2M_{cr}$
$I_g = bd^3/12 = (12\ in)(12\ in)^3/12 = 1728\ in^4$
$S_g = bd^2/6 = (12\ in)(12\ in)^2/6 = 288\ in^3$
$f_r = 0.37\sqrt{f'_c} = 0.37(\sqrt{6}\ ksi) = .906\ ksi$
$1.2M_{cr} = 1.2(S_g)(f_r) = 1.2(288\ in^3)(.906\ ksi) = 313\ k\text{-}in = 26.1k\text{-}ft < 36.2\ k\text{-}ft/ft$

Try #6 at 7 in spacing

$A_s = 0.75\ in^2$
$T = C = A_s*f_y = (0.75\ in^2)(60\ ksi) = 45\ k$
$a = A_s*f_y/(.85*f'_c*b) = (45\ k)/(.85*6\ ksi*12\ in) = 0.74\ in$
$M_r = \varphi M_n$
$\Phi = 0.90$
$M_r = \varphi A_s*\ f_y\ (d-a/2) = (0.90)(0.75\ in^2)(60\ ksi)(9.625\ in - (0.74\ in/2)) = 377\ k\text{-}in =$ **31.4 k-ft > 27.2 k-ft/ft – OK**

Crack Control (AASHTO 5.7.3.4)

Try #6 at 7 in spacing

$\gamma_e = 0.75$ (Class 2)
$A_s = .75\ in^2$
$a = A_s*f_y/(.85*f'_c*b) = (.75\ in^2*60\ ksi)/(.85*6\ ksi*12\ in) = 0.74\ in$
$f_{ss} = [M_u/(d-(a/2))]/A_s = [17.2\ k\text{-}ft/ft(12\ in/ft)\ /(9.625\ in - (.74in/2))]/0.75\ in^2 = 29.7\ ksi$
$d_c = 2\ in + .75/2 = 2.375\ in$
$\beta = 1 + d_c/(0.7(h - d_c) = 1 + 2.375\ in/(0.7(12\ in - 2.375\ in)) = 1.35$
$S \leq (700*\gamma_e)/(\beta*\ f_{ss}) - 2d_c = (700*0.75)/(1.35*29.7\ ksi) - (2)(2.375\ in) =$ **8.34 in > 7 in – OK**

Therefore use #6 at 7 in OC.

Temperature and Shrinkage (AASHTO 5.10.8)

$A_{sT\&S} = 1.30(b)(h)/(2)(b + h)f_y = 1.30(12\ in)(12\ in)/(2(12\ in + 12\ in)(60ksi)) = .065\ in^2$
$0.11 < A_{sT\&S} < 0.6 - 0.11\ in^2$ controls

Provide minimum of #4 bar at 18 in OC, $A_s = 0.133\ in^2/ft$

ENGINEERING VENTURES INC
208 Flynn Avenue, Suite 2A
Burlington, VT 05401
tel. 802.863.6225
fax 802.863.6306

85 Mechanic Street, Suite 350A
Lebanon, NH 03766
tel. 603.442.9333
fax 603.442.9331

Shear Design

(AASHTO 5.8.3.3)

Top Slab (monolithic with wall): V_u = 12.6 k/ft

$V_n = V_c + V_s + V_p$
$V_c = 0.0316\beta\sqrt{f'_c}b_vd_v$
$V_c = 0.0316*2*\sqrt{6ksi}*12\ in*11.625\ in = 21.6\ k$
$V_n = (0.9)(21.6\ k/ft) =$ **19.4 k/ft > 12.6 k/ft - OK**
-or-
$V_n = 0.25f'_cb_vd_v + V_p$
$V_n = 0.25(6\ ksi)(12\ in)(11.625\ in) = 209\ k/ft$
$V_n = 0.9(209\ k/ft) = 188\ k/ft > 12.6\ k/ft$

Bottom Slab (monolithic with wall): V_u = 10.9 k/ft

$V_n = V_c + V_s + V_p$
$V_c = 0.0316\beta\sqrt{f'_c}b_vd_v$
$V_c = 0.0316*2*\sqrt{6}\ ksi*12\ in*9.625\ in = 17.9\ k$
$V_n = (0.9)(17.9\ k/ft) =$ **16.1 k/ft > 10.9 k/ft - OK**
-or-
$V_n = 0.25f'_cb_vd_v + V_p$
$V_n = 0.25(6\ ksi)(12\ in)(9.625\ in) = 173\ k/ft$
$V_n = 0.9(173\ k) = 156\ k/ft > 10.9\ k/ft$

Wall Slab: V_u = 5.2 k/ft

$V_n = V_c + V_s + V_p$
$V_c = 0.0316\beta\sqrt{f'_c}b_vd_v$
$V_c = 0.0316*2*\sqrt{6}\ ksi*12\ in*9.625\ in = 17.9\ k$
$V_n = (0.9)(17.9\ k/ft) =$ **16.1 k/ft > 5.2 k/ft - OK**
-or-
$V_n = 0.25f'_cb_vd_v + V_p$
$V_n = 0.25(6\ ksi)(12\ in)(9.625\ in) = 173\ k/ft$
$V_n = 0.9(173\ k/ft) = 156\ k/ft > 5.2\ k/ft$

ENGINEERING VENTURES INC
208 Flynn Avenue, Suite 2A
Burlington, VT 05401
tel. 802.863.6225
fax 802.863.6306

85 Mechanic Street, Suite 350A
Lebanon, NH 03766
tel. 603.442.9333
fax 603.442.9331

Box Culvert Reinforcing

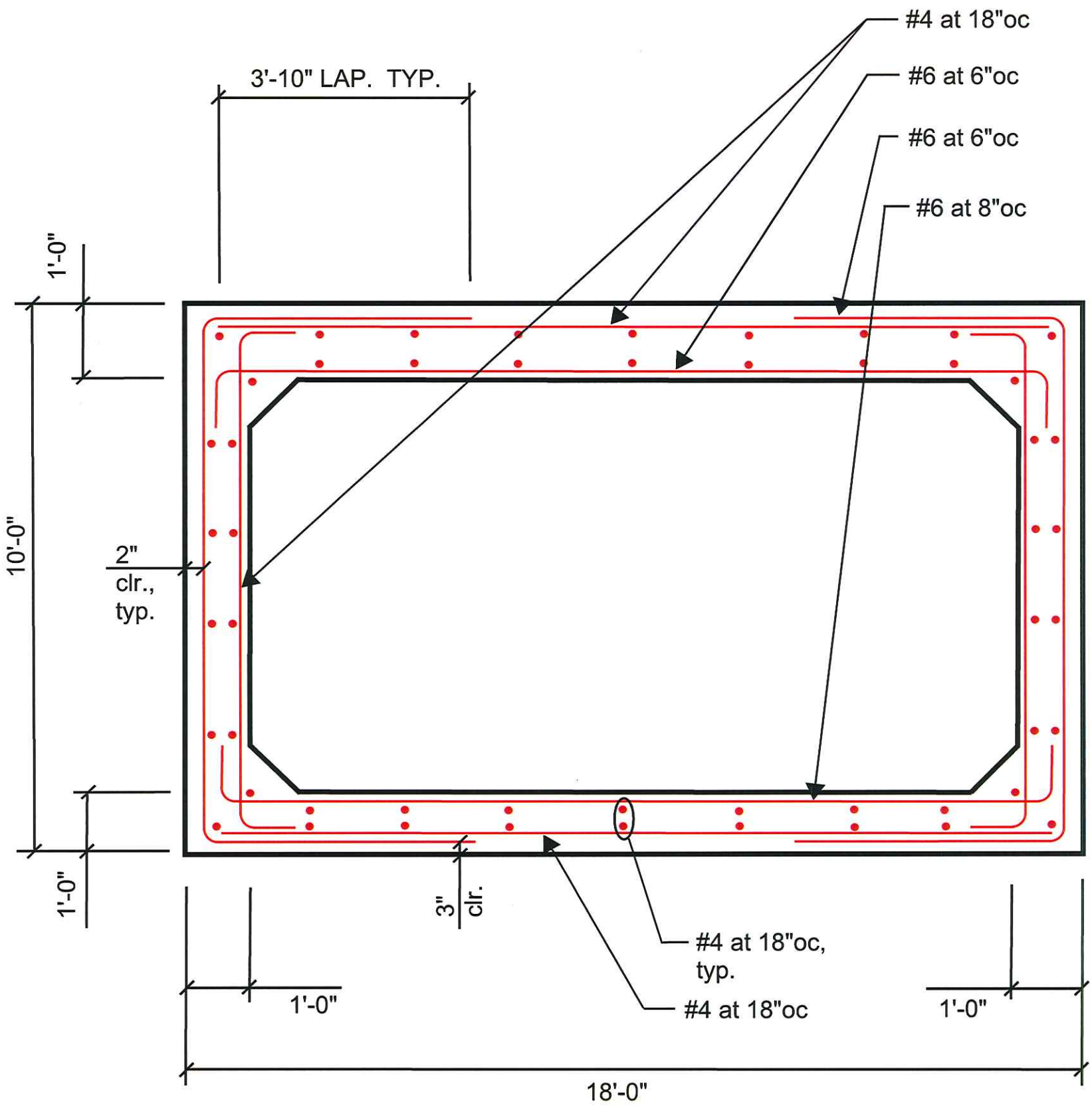

ENGINEERING VENTURES INC
208 Flynn Avenue, Suite 2A
Burlington, VT 05401
tel. 802.863.6225
fax 802.863.6306

85 Mechanic Street, Suite 350A
Lebanon, NH 03766
tel. 603.442.9333
fax 603.442.9331

Headwall

$\beta = 0°$

$$k_A = \frac{\cos\beta - \sqrt{[(\cos\beta)^2 - (\cos\varphi)^2]}}{\cos\beta + \sqrt{[(\cos\beta)^2 - (\cos\varphi)^2]}} = \frac{\cos 0 - \sqrt{[(\cos 0)^2 - (\cos 30)^2]}}{\cos 0 + \sqrt{[(\cos 0)^2 - (\cos 30)^2]}} = 0.307$$

$V_u = \gamma_s * H^2 * k_A/2 = (135\text{ pcf})(1.33\text{ ft})^2(0.307)/2 = 37\text{ lb/ft}$
$M_u = 1.35(Wl/3) = 1.35(68\text{ lb/ft})(1.33')/3 = 41\text{ lb-ft/ft}$

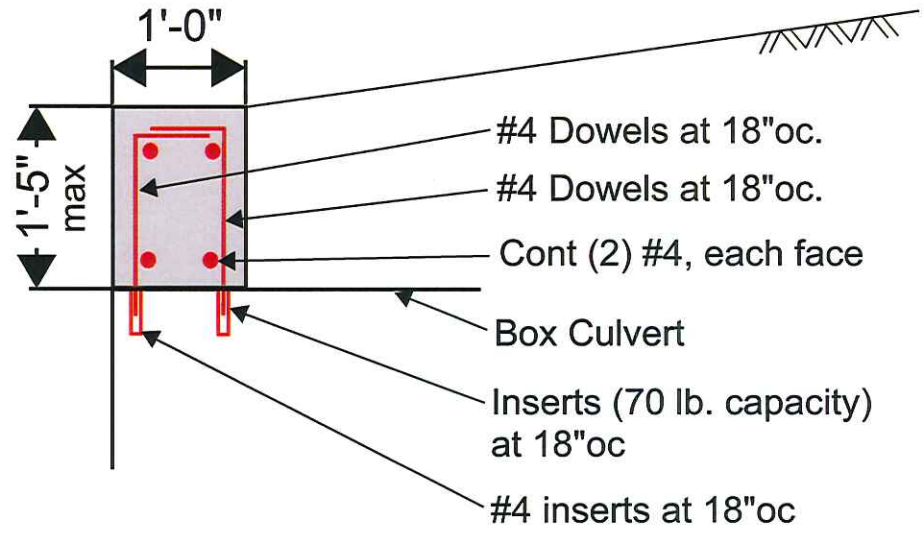

<u>Minimum Flexural (AASHTO 5.7.3.3.2)</u>

$1.33\ M_u$
$1.33(M_u) = 1.33(41\text{ lb-ft/ft}) =$ **55 lb-ft/ft – Controls**

-or-

$1.2M_{cr}$
$d = 12\text{ in} - 2\text{in} - .5\text{ in}/2 = 9.75\text{ in.}$
$I_g = bd^3/12 = (12\text{ in})(9.75\text{ in})^3/12 = 927\text{ in}^4$
$S_g = bd^2/6 = (12\text{ in})(9.75\text{ in})^2/6 = 190\text{ in}^3$
$f_r = 0.37\sqrt{f'_c} = 0.37(\sqrt{5}\text{ ksi}) = .827\text{ ksi}$
$M_{cr} = (S_g)(f_r) = (190\text{ in}^3)(.827\text{ ksi}) = 157\text{ k-in} = 13.1\text{ k-ft} > 55\text{ lb-ft}$

Try #4 at 18 in spacing

$A_s = 0.133\text{ in}^2$
$T = C = A_s * f_y = (0.133\text{ in}^2)(60\text{ ksi}) = 8\text{ k}$
$a = A_s * f_y/(.85 * f'_c * b) = (8\text{ k})/(.85 * 5\text{ ksi} * 12\text{ in}) = 0.16\text{ in}$
$M_r = \varphi M_n$
$\Phi = 0.90$
$M_r = \varphi A_s * f_y\ (d - a/2) = (0.90)(0.133\text{ in}^2)(60\text{ ksi})(9.75\text{ in} - (0.16\text{ in}/2)) = 69.5\text{ k-in} =$ **5.8 k-ft > 55 lb-ft/ft – OK**

<u>Crack Control (AASHTO 5.7.3.4)</u>

$\gamma_e = 0.75$ (Class 2)
$f_{ss} = [M_u/(d-(a/2))]/A_s = [31\text{ lb-ft/ft}(12\text{ in/ft})/(9.75\text{ in} - (.16\text{ in}/2))]/0.133\text{ in}^2 = 0.38\text{ ksi}$
$d_c = 2\text{ in} + .5/2 = 2.25\text{ in}$
$\beta = 1 + d_c/(0.7(h - d_c) = 1 + 2.25\text{ in}/(0.7(12\text{ in} - 2.25\text{ in})) = 1.33$
$S \leq (700 * \gamma_e)/(\beta * f_{ss}) - 2d_c = (700 * 0.75)/(1.33 * 0.38\text{ ksi}) - (2)(2.25\text{ in}) =$ **1034 in > 18 in – OK**

Therefore use #4 at 18 in OC.

d = 12 in – 2*2 in – 2*.5in = 7 in

$P = M_u/d$ = 41 lb-ft/ft/((7 in)/12in/ft) = 70 lb/ft

Therefore use plastic inserts with a minimum capacity of 70 lb at 18 in OC.

Temperature and Shrinkage (AASHTO 5.10.8)

$A_{sT\&S} = 1.30(b)(h)/(2)(b + h)f_y = 1.30(12\text{ in})(12\text{ in})((2(12\text{ in} + 12\text{ in})(60\text{ksi})) = .065\text{ in}^2$

$0.11 < A_{sT\&S} < 0.6 – 0.11\text{ in}^2$ controls

Provide minimum of #4 bar at 18 in OC, A_s = 0.133 in^2/ft

Cutoff Wall

Temperature and Shrinkage (AASHTO 5.10.8)

$A_{sT\&S} = 1.30(b)(h)/(2)(b + h)f_y = 1.30(12\text{ in})(12\text{ in})((2(12\text{ in} + 12\text{ in})(60\text{ksi})) = .065\text{ in}^2$

$0.11 < A_{sT\&S} < 0.6 – 0.11\text{ in}^2$ controls

Provide minimum of #4 bar at 18 in OC, A_s = 0.133 in^2/ft

ENGINEERING VENTURES INC
208 Flynn Avenue, Suite 2A
Burlington, VT 05401
tel. 802.863.6225
fax 802.863.6306

85 Mechanic Street, Suite 350A
Lebanon, NH 03766
tel. 603.442.9333
fax 603.442.9331

Title : Wilmington Culvert Wing Wall
Job # : 14164.02 Dsgnr: MRE
Descr:

Page: 1 of 2
Date: 21 APR 2014

Wall in File: s:\projects\0-2014\14164 sdi precast culverts\14164.02 w

RetainPro 10 (c) 1987-2012, Build 10.13.8.31
License : KW-06056711
License To : ENGINEERING VENTURES

Cantilevered Retaining Wall Design

Code: AASHTO LRFD

Criteria

Retained Height	=	11.00 ft
Wall height above soil	=	0.50 ft
Slope Behind Wall	=	0.00 : 1
Height of Soil over Toe	=	0.00 in
Water height over heel	=	0.0 ft

Soil Data

Allow Soil Bearing	=	4,000.0 psf
Coulomb Soil Pressure calculation		
Soil Friction Angle	=	30.0 deg
Active Pressure:Ka*Gamma	=	39.3 psf/ft
Passive Pressure:Kp*Gar	=	405.0 psf/ft
Soil Density, Heel	=	135.00 pcf
Soil Density, Toe	=	0.00 pcf
Footing||Soil Friction	=	0.500
Soil height to ignore for passive pressure	=	12.00 in

Surcharge Loads

Surcharge Over Heel	=	0.0 psf
Used To Resist Sliding & Overturning		
Surcharge Over Toe	=	0.0 psf
Used for Sliding & Overturning		

Axial Load Applied to Stem

Axial Dead Load	=	0.0 lbs
Axial Live Load	=	0.0 lbs
Axial Load Eccentricity	=	0.0 in

Lateral Load Applied to Stem

Lateral Load	=	1,620.0 #/ft
...Height to Top	=	1.00 ft
...Height to Bottom	=	0.00 ft
The above lateral load has been increased by a factor of		1.35
Wind on Exposed Stem	=	0.0 psf

Adjacent Footing Load

Adjacent Footing Load	=	0.0 lbs
Footing Width	=	0.00 ft
Eccentricity	=	0.00 in
Wall to Ftg CL Dist	=	0.00 ft
Footing Type		Line Load
Base Above/Below Soil at Back of Wall	=	0.0 ft
Poisson's Ratio	=	0.300

Design Summary

Wall Stability Ratios

Overturning	=	3.81 OK
Sliding	=	1.49 Ratio < 1.5!
Total Bearing Load	=	13,280 lbs
...resultant ecc.	=	13.07 in
Soil Pressure @ Toe	=	3,016 psf OK
Soil Pressure @ Heel	=	304 psf OK
Allowable	=	4,000 psf
Soil Pressure Less Than Allowable		
ACI Factored @ Toe	=	3,770 psf
ACI Factored @ Heel	=	380 psf
Footing Shear @ Toe	=	0.0 psi OK
Footing Shear @ Heel	=	9.1 psi OK
Allowable	=	82.2 psi

Sliding Calcs (Vertical Component NOT Used)

Lateral Sliding Force	=	4,449.9 lbs
less 100% Passive Force	= -	0.0 lbs
less 100% Friction Force	= -	6,640.0 lbs
Added Force Req'd	=	0.0 lbs OK
....for 1.5 : 1 Stability	=	34.9 lbs NG

Load Factors

Building Code	AASHTO LRFD
Dead Load	1.250
Live Load	1.500
Earth, H	1.750
Wind, W	1.400
Seismic, E	1.000

Stem Construction

		Top Stem	2nd
		Stem OK	Stem OK
Design Height Above Ftg	ft =	4.50	0.00
Wall Material Above "Ht"	=	Concrete	Concrete
Thickness	=	10.00	10.00
Rebar Size	=	# 4	# 6
Rebar Spacing	=	12.00	8.00
Rebar Placed at	=	Edge	Edge
Design Data			
fb/FB + fa/Fa	=	**0.466**	**0.758**
Total Force @ Section	lbs =	1,453.0	5,781.4
Moment....Actual	ft-# =	3,148.3	16,068.4
Moment.....Allowable	ft-# =	6,756.3	21,200.6
Shear.....Actual	psi =	15.9	72.0
Shear.....Allowable	psi =	106.1	94.9
Wall Weight	psf =	125.0	125.0
Rebar Depth 'd'	in =	7.63	7.63
LAP SPLICE IF ABOVE	in =	13.24	22.20
LAP SPLICE IF BELOW	in =	13.24	
HOOK EMBED INTO FTG	in =		8.57

Hook embedment reduced by stress ratio

Masonry Data

f'm	psi =	
Fs	psi =	
Solid Grouting	=	
Use Half Stresses	=	
Modular Ratio 'n'	=	
Short Term Factor	=	
Equiv. Solid Thick.	=	
Masonry Block Type	=	Medium Weight
Masonry Design Method	=	ASD

Concrete Data

f'c	psi =	5,000.0	4,000.0
Fy	psi =	60,000.0	60,000.0

Notes:
1. Plan reviewer to confirm soil retained height.
2. Surcharge not required due to wall distance from traffic.

ENGINEERING VENTURES INC
208 Flynn Avenue, Suite 2A
Burlington, VT 05401
tel. 802.863.6225
fax 802.863.6306

85 Mechanic Street, Suite 350A
Lebanon, NH 03766
tel. 603.442.9333
fax 603.442.9331

Title : Wilmington Culvert Wing Wall
Job # : 14164.02 Dsgnr: MRE
Descr:

Page: 2 of 2
Date: 21 APR 2014

Wall in File: s:\projects\0-2014\14164 sdi precast culverts\14164.02 w

RetainPro 10 (c) 1987-2012, Build 10.13.8.31
License : KW-06056711
License To : ENGINEERING VENTURES

Cantilevered Retaining Wall Design

Code: AASHTO LRFD

Footing Dimensions & Strengths

Toe Width	=	0.00 ft
Heel Width	=	8.00
Total Footing Width	=	8.00
Footing Thickness	=	12.00 in
Key Width	=	0.00 in
Key Depth	=	0.00 in
Key Distance from Toe	=	3.67 ft

f'c = 3,000 psi Fy = 60,000 psi
Footing Concrete Density = 150.00 pcf
Min. As % = 0.0018
Cover @ Top 2.00 @ Btm.= 3.00 in

Footing Design Results

		Toe	Heel
Factored Pressure	=	3,770	380 psf
Mu' : Upward	=	0	35,752 ft-#
Mu' : Downward	=	0	52,485 ft-#
Mu: Design	=	0	16,733 ft-#
Actual 1-Way Shear	=	0.00	9.14 psi
Allow 1-Way Shear	=	0.00	82.16 psi

Toe Reinforcing = # 5 @ 11.50 in
Heel Reinforcing = # 5 @ 12.00 in
Key Reinforcing = None Spec'd

Other Acceptable Sizes & Spacings

Toe: Not req'd, Mu < S * Fr
Heel: #4@ 6.00 in, #5@ 9.25 in, #6@ 13.00 in, #7@ 17.75 in, #8@ 23.25 in, #9@ 29.
Key: No key defined

Summary of Overturning & Resisting Forces & Moments

Item		.....OVERTURNING..... Force lbs	Distance ft	Moment ft-#
Heel Active Pressure	=	2,829.9	4.00	11,319.8
Surcharge over Heel	=			
Surcharge Over Toe	=			
Adjacent Footing Load	=			
Added Lateral Load	=	1,620.0	1.50	2,430.0
Load @ Stem Above Soil	=			
	=			
Total		4,449.9	**O.T.M.**	13,749.8
	=		=	

Resisting/Overturning Ratio = **3.81**
Vertical Loads used for Soil Pressure = 13,280.0 lbs

		.....RESISTING..... Force lbs	Distance ft	Moment ft-#
Soil Over Heel	=	10,642.5	4.42	47,004.4
Sloped Soil Over Heel	=			
Surcharge Over Heel	=			
Adjacent Footing Load	=			
Axial Dead Load on Stem	=			
* Axial Live Load on Stem	=			
Soil Over Toe	=			
Surcharge Over Toe	=			
Stem Weight(s)	=	1,437.5	0.42	599.0
Earth @ Stem Transitions	=			
Footing Weight	=	1,200.0	4.00	4,800.0
Key Weight	=		3.67	
Vert. Component	=			
	Total =	13,280.0 lbs	**R.M.=**	52,403.3

* Axial live load NOT included in total displayed, or used for overturning resistance, but is included for soil pressure calculation.

DESIGNER NOTES:

ENGINEERING VENTURES INC
208 Flynn Avenue, Suite 2A
Burlington, VT 05401
tel. 802.863.6225
fax 802.863.6306

85 Mechanic Street, Suite 350A
Lebanon, NH 03766
tel. 603.442.9333
fax 603.442.9331

Wing Wall Reinforcing

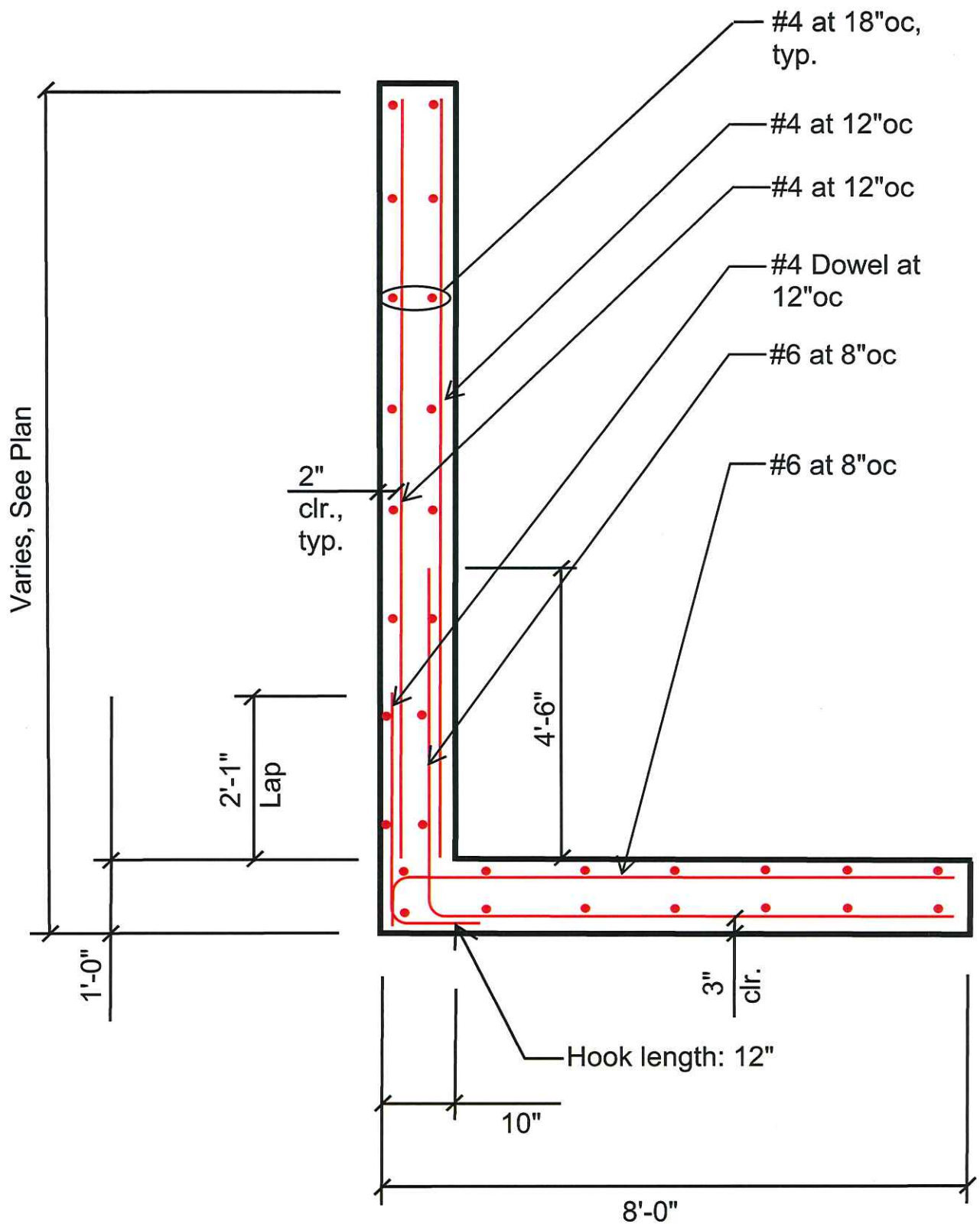

S.D. Ireland
Concrete Construction Corporation
802-863-6222 • Fax: 802-860-1528
www.sdireland.com

CONCRETE MIX DESIGN

6000 psi

SCC

SDI MIX CODE: P60TER

DATE: March 28, 2014 **PLANT:** Burlington/Williston, VT

PROJECT: **General DOT Precast - 2014**

FINE AGGREGATE:
ASTM C 33

Source:	Hinesburg Sand & Gravel
Specific Gravity:	2.67 (Abs.: 1.3%)
Fineness Modulus:	≥ 2.6

COARSE AGGREGATE:
ASTM C 33

Source:	S.D. Ireland, Brownell Quarry
Specific Gravity:	2.80 (Abs.: 0.30%)
Description	3/4" 100% Crushed Stone (Size #67)

CEMENT: Ternary Blend Cement; Lefarge North America Lakes and Seaway Re St. Constant, Quebec (Sp. Gvty. 3.02)

ADMIXTURES: Water Reducer (HRWR): Glenium 7500; BASF
Air Entraining Agent: Darex II AEA; Grace Concrete Chemicals

CONSTITUENTS (LBS. /YD³)

		Abs.Vol.
Coarse Aggregate (SSD)	1750	10.02
Fine Aggregate (SSD)	1017	6.10
Cement	800	4.25
Water	304.6	4.88
Air Content (Entrained)	6.5%	1.75
Total	3872	27.00ft³

MIX PROPERTIES

Water Cement Ratios: 0.38
Entrained Air Content: 5.0 % – 9.0%
Dry Unit Weight: 144.2 ± pcf
Spread: 20" to 28"
VSI ≤ 1

***ADMIXTURE(S) DOSEAGE (OZ. /YD³)**

Glenium 7500 (HRWR)	56 - 64
Darex II AEA	2.8

Approved by James Wild, VAOT Composite Materials Engineer 7/17/14

*Admixture dosage rates are subject to change.

BREAK HISTORY±

24-HR.	3400 PSI
7-DAYS	6000 PSI
28-DAYS	6700 PSI

Designation: A1055/A1055M – 10$^{\varepsilon 1}$

Standard Specification for Zinc and Epoxy Dual-Coated Steel Reinforcing Bars[1]

This standard is issued under the fixed designation A1055/A1055M; the number immediately following the designation indicates the year of original adoption or, in the case of revision, the year of last revision. A number in parentheses indicates the year of last reapproval. A superscript epsilon (ε) indicates an editorial change since the last revision or reapproval.

ε[1] NOTE—Mathematical corrections to A1.3.8 were made in December 2011.

1. Scope*

1.1 This specification covers deformed and plain steel reinforcing bars with a dual coating of zinc alloy and an epoxy coating. The zinc-alloy layer is applied by the thermal spray coating method (metallizing) followed by an epoxy coating applied by the electrostatic spray method.

NOTE 1—The coating applicator is identified throughout this specification as the manufacturer.

1.2 Requirements of the zinc coating are contained in Table 1.

1.3 Requirements for fusion-bonded powder coatings are contained in Annex A1.

1.4 Guidelines for construction practices at the job-site are presented in Appendix X1.

1.5 This specification is applicable for orders in either inch-pound or SI units.

1.6 The values stated in either inch-pound units or SI units are to be regarded as standard. Within the text, the SI units are shown in brackets. The values stated in each system are not exact equivalents; therefore, each system must be used independently of the other, except as specifically noted in Table 2. Combining values from the two systems may result in nonconformance with this specification.

1.7 *This standard does not purport to address all of the safety concerns, if any, associated with its use. It is the responsibility of the user of this standard to establish appropriate safety and health practices and determine the applicability of regulatory limitations prior to use.*

2. Referenced Documents

2.1 *ASTM Standards:*[2]

A615/A615M Specification for Deformed and Plain Carbon-Steel Bars for Concrete Reinforcement

A706/A706M Specification for Low-Alloy Steel Deformed and Plain Bars for Concrete Reinforcement

A944 Test Method for Comparing Bond Strength of Steel Reinforcing Bars to Concrete Using Beam-End Specimens

A996/A996M Specification for Rail-Steel and Axle-Steel Deformed Bars for Concrete Reinforcement

B117 Practice for Operating Salt Spray (Fog) Apparatus

B833 Specification for Zinc and Zinc Alloy Wire for Thermal Spraying (Metallizing) for the Corrosion Protection of Steel

D4060 Test Method for Abrasion Resistance of Organic Coatings by the Taber Abraser

E29 Practice for Using Significant Digits in Test Data to Determine Conformance with Specifications

E527 Practice for Numbering Metals and Alloys in the Unified Numbering System (UNS)

G8 Test Methods for Cathodic Disbonding of Pipeline Coatings

G14 Test Method for Impact Resistance of Pipeline Coatings (Falling Weight Test)

G20 Test Method for Chemical Resistance of Pipeline Coatings

G62 Test Methods for Holiday Detection in Pipeline Coatings

2.2 *American Welding Society:*[3]

ANSI/AWS A5.33 Specification for Solid and Ceramic Wires and Ceramic Rods for Thermal Spraying

AWS C2.23M/C2.23 Specification for the Application of Thermal Spray Coatings (Metallizing) of Aluminum, Zinc, and Their Alloys and Composites for the Corrosion Protection for Steel

AWS C2.25/C2.25M Specification for Thermal Spray Feedstock—Solid and Composite Wire and Ceramic Rods

2.3 *NACE International Standard:*[4]

RP-287 Field Measurement of Surface Profile of Abrasive

[1] This specification is under the jurisdiction of ASTM Committee A01 on Steel, Stainless Steel and Related Alloys and is the direct responsibility of Subcommittee A01.05 on Steel Reinforcement.

Current edition approved Dec. 1, 2010. Published December 2010. Originally approved in 2008. Last previous edition approved in 2008 as A1055 – 08a$^{\varepsilon 1}$. DOI: 10.1520/A1055_A1055M-10E01.

[2] For referenced ASTM standards, visit the ASTM website, www.astm.org, or contact ASTM Customer Service at service@astm.org. For *Annual Book of ASTM Standards* volume information, refer to the standard's Document Summary page on the ASTM website.

[3] Available from American Welding Society (AWS), 550 NW LeJeune Rd., Miami, FL 33126, http://www.aws.org.

[4] Available from National Association of Corrosion Engineers (NACE), 1440 South Creek Dr., Houston, TX 77084-4906, http://www.nace.org.

***A Summary of Changes section appears at the end of this standard.**

Copyright © ASTM International, 100 Barr Harbor Drive, PO Box C700, West Conshohocken, PA 19428-2959, United States.

Copyright by ASTM Int'l (all rights reserved); Tue Jan 17 11:34:18 EST 2012
Downloaded/printed by
Wes Miller (Gerdau+Knoxville+ZBAR) pursuant to License Agreement. No further reproductions authorized.

TABLE 1 Chemical Composition Requirements for Zinc and Zinc-Alloy Wires

Common Name (UNS)[A]	Al, max unless noted	Cd, max	Cu, max	Fe, max	Pb, max	Sn, max	Sb, max	Ag, max	Bi, max	As, max	Ni, max	Mg, max	Mo, max	Ti, max	Zn, min	Other, Total max
99.99 Zinc[B] (Z13005)	0.002[C]	0.003	0.005	0.003	0.003	0.001	...[D]	...	...	...	...	...	...	...	99.99	...
99.99 Zinc[B] (Z15005)	0.01	0.02	0.02	0.02	0.03	...	...	...	...	...	...	...	...	...	99.9	0.10 total non-Zn
99.995 Zinc (...)[E]	0.001	0.003	0.001	0.002	0.003	0.003	...	...	...	...	...	...	...	...	99.995	0.005
99.95 Zinc (...)	0.01	0.02	0.001	0.02	0.03	0.001	...	...	...	...	...	...	...	...	99.95	0.050
99.95 Zinc (...)	0.01	0.005	0.7	0.01	0.005	0.001	...	...	...	...	...	0.01	0.01	0.18	99	1.0
98Zn/2Al (Z30402)	1.5-2.5	0.005	0.005	0.02	0.005	0.003	0.10	0.015	0.02	0.002	0.005	0.02	...	...	remainder	...

[A] UNS designations were established in accordance with Practice E527.
[B] In accordance with ANSI/AWS A5.33.
[C] The following applies to all specified limits in this table. For the purposes of determining conformance with this specification, an observed value obtained from analysis shall be rounded off to the nearest unit in the last right-hand place of figures used in expressing the limiting value, in accordance with the rounding method of Practice E29.
[D] ... indicates that the element is not applicable.
[E] (...) indicates no Unified Numbering System (UNS) designation for this option.

TABLE 2 Bend Test Requirements

A615, A706, or A996		A615M, A706M, or A996M		Bend Angle (After Rebound, degrees)	Time to Completion max, s
Bar No.	Mandrel Diameter In.[A]	Bar No.	Mandrel Diameter mm[A]		
3	3	10	75	180	15
4	4	13	100	180	15
5	5	16	125	180	15
6	6	19	150	180	15
7	7	22	175	180	45
8	8	25	200	180	45
9	9	29	230	180	45
10	10	32	250	180	45
11	11	36	280	180	45
14	17	43	430	90	45
18	23	57	580	90	45

[A] Mandrel diameters specified for similar size (shown on the same line) inch-pound bars and metric may be interchanged.

Blast-Cleaned Steel Surface Using a Replica Tape

2.4 *Society for Protective Coatings Specifications:*[5]

SSPC-PA 2 Measurement of Dry Coating Thickness with Magnetic Gages

SSPC-SP 10 Near-White Blast Cleaning

SSPC-VIS 1 Pictorial Surface Preparation standards for Painting Steel Surfaces

2.5 *Concrete Reinforcing Steel Institute:*[6]

Voluntary Certification Program for Fusion Bonded Epoxy Coating Applicator Plants

2.6 *American Concrete Institute Standard:*[7]

ACI 301 Specifications for Structural Concrete

3. Terminology

3.1 *Definitions of Terms Specific to This Standard:*

3.1.1 *disbonding, n*—loss of adhesion between the fusion-bonded powder coating and the zinc-coated steel reinforcing bar.

3.1.2 *fusion-bonded powder coating, n*—a product containing pigments, thermosetting resins, cross-linking agents, and other additives, which is applied in the form of a powder onto a clean, heated metallic substrate and fused to form a continuous barrier coating.

3.1.3 *holiday, n*—a discontinuity in a coating that is not discernible to a person with normal or corrected vision.

3.1.4 *patching material, n*—a liquid two-part, epoxy coating used to repair damaged or uncoated areas.

3.1.5 *thermal spray coating (metallizing), n*—a zinc and zinc alloy, or both, wire used in depositing a metallized layer of zinc by thermal spraying (metallizing) using oxy-fuel or electric-arc thermal spraying which is applied onto a clean, heated metallic substrate to form a continuous coating.

3.1.6 *wetting agent, n*—a material that lowers the surface tension of water allowing it to penetrate more effectively into small discontinuities in the coating giving a more accurate indication of the holiday count.

4. Ordering Information

4.1 It shall be the responsibility of the purchaser to specify all requirements that are necessary for the coated steel reinforcing bars under this specification. Such requirements to be considered include but are not limited to the following:

4.1.1 Reinforcing bar specification and year of issue,

4.1.2 Quantity of bars,

4.1.3 Size and grade of bars,

4.1.4 Requirements for the zinc coating (5.2),

4.1.5 Requirements for the powder coating and provision of test data (5.3 and 5.4),

4.1.6 Requirements for patching material (5.5),

4.1.7 Quantity of patching material,

4.1.8 Specific requirements for test frequency (9.1),

4.1.9 Whether a report on tests performed on the coated steel reinforcing bars being furnished is required (8.4.1 and Section 14),

[5] Available from Society for Protective Coatings (SSPC), 40 24th St., 6th Floor, Pittsburgh, PA 15222-4656, http://www.sspc.org.

[6] Available from Concrete Reinforcing Steel Institute (CRSI), 933 North Plum Grove Rd., Schaumburg, IL 60173-4767, http://www.crsi.org.

[7] Available from American Concrete Institute (ACI), P.O. Box 9094, Farmington Hills, MI 48333-9094, http://www.aci-int.org.

Copyright by ASTM Int'l (all rights reserved); Tue Jan 17 11:34:18 EST 2012
Downloaded/printed by
Wes Miller (Gerdau+Knoxville+ZBAR) pursuant to License Agreement. No further reproductions authorized.

4.1.10 Additional specimens to be provided to the purchaser for testing from the coated steel reinforcing bars being furnished (12.1), and

4.1.11 Manufacturer qualification and certification requirements (if any).

NOTE 2—It is recommended that the coating application procedures and processes be audited by an independent certification program for coating applicator plants such as that provided by the Voluntary Certification Program or equivalent.

5. Materials

5.1 Steel reinforcing bars to be coated shall meet the requirements of one of the following specifications: A615M, A706M, or A996M [A615, A706, or A996] as specified by the purchaser and shall be free of contaminates such as oil, grease, or paint.

NOTE 3—Prior to coating, the steel reinforcing bars should be inspected for their suitability for coating. Bars with sharp edges on the deformations, rolled-in slivers, or other surface imperfections are difficult to coat properly and should not be coated. The coating will flow away from the sharp edges and may result in inadequate coating thickness at these points.

5.2 *Zinc-Alloy Wire*:

5.2.1 The thermal spray coating feedstock material shall be specified according to Specification B833 or to AWS C2.25/C2.25M.

5.2.2 The wire shall conform to one of the chemical composition requirements prescribed in Table 1.

5.2.3 The wire shall be clean and free of corrosion, adhering foreign material, scale, seams, nicks, burrs, and other defects which would interfere with the operation of thermal spraying equipment. The wire shall uncoil readily and be free of bends or kinks that would prevent its passage through the thermal spray gun.

5.2.4 The wire shall be a continuous length per spool, coil, or drum. Splices or welds are permitted, provided that they do not interfere with the thermal spray equipment or coating process.

5.2.5 The starting end of each coil shall be tagged to indicate winding direction and to be readily identifiable with ASTM designation.

5.3 *Powder Coating*:

5.3.1 The powder coating shall meet the requirements of Annex A1. Upon request, the purchaser shall be provided with the test report for review.

5.3.2 A written certification shall be furnished to the purchaser that properly identifies the number of each lot of powder coating used in the order material quantity represented, date manufacture, name and address of the powder coating manufacturer, and a statement that the supplied powder coating is the same composition as that qualified according to Annex A1 of this specification.

5.3.3 The powder coating shall be stored in a temperature-controlled environment following the written recommendations of the powder coating manufacturer until ready for use. At that point, if the storage temperature is below the plant ambient temperature, the powder coating shall be given sufficient time to reach approximate plant ambient temperature. The powder coating shall be used within the powder coating manufacturer's written recommended shelf life.

5.4 If specified in the order, a representative 8-oz [0.2-kg] sample of the powder coating shall be supplied to the purchaser from each batch. The sample shall be packaged in an airtight container and identified by batch number.

5.5 If specified in the order, patching material compatible with the coating, inert in concrete, and approved by the powder coating manufacturer, shall be supplied to the purchaser.

6. Surface Preparation

6.1 The surface of the steel reinforcing bars to be coated shall be cleaned by abrasive blast cleaning to near-white metal in accordance with SSPC-SP 10. The following visual standard of comparison may be used to define the final surface condition: SSPC-VIS 1. Average blast profile maximum roughness depth readings of 1.5 to 4.0 mils [0.04 to 0.10 mm] as determined by replica tape measurements using NACE RP-287, shall be considered suitable as an anchor pattern.

NOTE 4—The use of a "profilometer"-type surface measurement instrument that measures the peak count as well as the maximum profile depth is recommended.

NOTE 5—Abrasive blast cleaning of steel reinforcing bars with a high degree (>90 %) of grit in the cleaning media provides the most suitable anchor profile for coating adhesion. After grit has been recycled, a small portion will take on the appearance of shot.

6.2 Multidirectional, high-pressure dry air knives shall be used after blasting to remove dust, grit, and other foreign matter from the blast-cleaned steel surface. The air knives shall not deposit oil on the steel reinforcing bars.

NOTE 6—It is recommended that incoming steel reinforcing bars and blast media be checked for salt contamination prior to use. Blast media found to be salt contaminated should be rejected. Steel reinforcing bars found to be salt contaminated from exposure to deicing salts or salt spray should be cleaned by acid washing or other suitable methods to remove salt contaminants from the surface prior to blast cleaning.

7. Coating Application

7.1 A thin zinc-alloy layer shall be applied by a thermal arc spray (metallization) system directly after the blast cleaning and before the powder coating in accordance with AWS C2.23M/C2.23 and the written specification of the zinc alloy supplier.

7.1.1 Thermal spray equipment shall be set up, calibrated, and operated according to the manufacturer's instructions and technical manuals or the Thermal Coating Spray applicator's recommendation.

7.2 The zinc-alloy coating shall be applied to the cleaned steel reinforcing bar surface as soon as possible after the bar has been cleaned and before visible oxidation of the surface occurs as discernible to a person with normal or corrected vision. In no case shall application of the coating be delayed more than 30 minutes after cleaning.

7.3 The fusion-bonded epoxy powder coating shall be applied in accordance with the written recommendations of the manufacturer of the powder coating for initial steel surface temperature range and post application curing requirements. During continuous operations, the temperature of the surface immediately prior to coating shall be measured using infrared

Copyright by ASTM Int'l (all rights reserved); Tue Jan 17 11:34:18 EST 2012
Downloaded/printed by
Wes Miller (Gerdau+Knoxville+ZBAR) pursuant to License Agreement. No further reproductions authorized.

guns or temperature indicating crayons, or both, at least once every 30 minutes. At no time shall the temperature of the bar exceed 700°F [334°C].

NOTE 7—The use of both infrared and temperature-indicating crayon measurement of the steel reinforcing bars is recommended.

7.4 The powder coating shall be applied by electrostatic spray or other suitable method.

8. Requirements for Coated Steel Reinforcing Bars

8.1 *Coating Thickness*:

8.1.1 The coating thickness of the zinc layer shall be a minimum of 1.4 mils [35 μm].

8.1.2 The total coating thickness measurements of the combined zinc-alloy layer and the epoxy coating layer after curing shall be 7 to 12 mils [175 to 300 μm] for bars sizes Nos. 3 to 5 [Nos. 10 to 16] and 7 to 16 mils [175 to 400 μm] for bar sizes Nos. 6 to 18 [Nos. 19 to 57]. The upper thickness limit shall not apply to repaired areas of damaged coating.

8.1.3 Coating thicknesses shall be measured and recorded for both zinc and epoxy thickness. A single recorded steel reinforcing bar coating thickness measurement is the average of three individual gage readings obtained between four consecutive deformations. A minimum of five recorded measurements shall be taken approximately evenly spaced along each side of the test specimens (a minimum of ten recorded measurements per bar).

NOTE 8—The zinc thickness will be measured by either using a bar that has only the zinc coating applied or by use of a duplex measuring device capable of reading the zinc and epoxy coatings simultaneously.

8.1.4 For acceptance purposes, the average of all recorded coating thickness measurements shall not be less than the specified minimum thickness or more than the specified maximum thickness. No single recorded coating thickness measurement shall be less than 80 % of the specified minimum thickness or more than 120 % of the specified maximum thickness.

8.1.5 Thickness measurements shall be made in accordance with SSPC-PA-2 and in accordance with the manufacturer's instructions for the measuring device, following the instructions for calibration and use recommended by the thickness gage manufacturer. "Pencil-type" pull-off gages that require the operator to observe the reading at the instant the magnet is pulled from the surface shall not be used.

8.1.6 The coating thickness shall be measured on the body of a straight length of steel reinforcing bar between the deformations.

8.2 *Coating Continuity*:

8.2.1 The zinc coating shall be uniform without blisters, cracks, loose particles, or exposed steel as examined with 10× magnification.

8.2.2 The manufacturer's plant shall have an operational in-line 67.5 V, 80 000 Ω wet-sponge type direct-current holiday detector or equivalent method with an automated holiday counting system to determine the epoxy coating acceptability of the steel reinforcing bars prior to shipment.

NOTE 9—Hand-held holiday detector checks should be performed each production day to verify the accuracy of the in-line system. Hand-held holiday detectors offer a reliable way to correlate data obtained from the in-line holiday-detection system.

8.2.3 On average, there shall not be more than one holiday per foot [three holidays per metre] on a coated steel reinforcing bar. The average applies to the full production length of a bar.

8.2.4 A wetting agent shall be used in accordance with Test Methods G62 in the inspection for holidays on the coated steel reinforcing bars.

8.3 *Epoxy Coating Flexibility*:

8.3.1 The epoxy coating flexibility shall be evaluated by bending production coated steel reinforcing bars (with both the alloy zinc and the powder coating applied) at a uniform rate around a mandrel of specified size within a maximum specified time period as prescribed in Table 2. The two longitudinal ribs shall be placed in a plane perpendicular to the mandrel radius. The test specimens shall be between 158 and 176°F [70 and 80°C].

8.3.2 Cracking or disbonding of the coating on the outside radius of the bent bar visible to a person with normal or corrected vision shall be considered cause for rejection of the coated steel reinforcing bars represented by the bend test sample.

NOTE 10—The qualification requirements for coating flexibility (see A1.3.5.1) prescribe bending a No. 6 [No. 19] deformed bar around a 6-in. [150-mm] diameter mandrel. The bend test requirements in Table 2 for evaluating the coating flexibility of production-coated steel reinforcing bars, for bar sizes Nos. 3 to 8 [Nos. 10 to 25], are not compatible with fabrication bending practices. Finished bend diameters for bar sizes Nos. 3 to 8 [Nos. 10 to 25] used in actual construction are smaller than the mandrel diameters in Table 2. Thus, the finished bends of production-coated bars, particularly the smaller bar sizes used for stirrups and ties, should be examined closely for hairline cracking on the outside radius of the bent bar. If hairline cracking is present, it should be repaired with patching material. To minimize the potential for damaging the coating, bending should be performed within the prescribed temperature range of 158 and 176°F [70 and 80°C].

8.3.3 A test in which fracture or partial failure of the steel reinforcing bar, or cracking or disbonding caused by imperfections in the bar surface visible after performing the bend test occurs, shall be considered an invalid test and the test shall be repeated on a new specimen.

8.4 *Coating Adhesion*:

8.4.1 Coating adhesion shall be evaluated by testing production coated steel reinforcing bars according to the cathodic disbondment procedure described in A1.3.2.1. Data from testing pertaining to the coated steel reinforcing bars being furnished shall be made available to the purchaser upon request.

NOTE 11—It is recommended that the manufacturer retain test specimens for 30 days of production and use a 30-day rolling average of coating disbondment test data as a basis for its statistical process control program for the steel reinforcing bar coating operation.

8.5 The requirements for coated steel reinforcing bars shall be met at the manufacturer's plant prior to shipment.

9. Number of Tests

9.1 The purchaser shall have the option to specify the sampling and test schedule for the number and frequency of tests for coating thickness, continuity, flexibility and adhesion.

Copyright by ASTM Int'l (all rights reserved); Tue Jan 17 11:34:18 EST 2012
Downloaded/printed by
Wes Miller (Gerdau+Knoxville+ZBAR) pursuant to License Agreement. No further reproductions authorized.

9.2 If the number and frequency of tests are not specified by the purchaser the following shall apply:

9.2.1 Tests for the zinc and epoxy coating thickness shall be made on a minimum of two bars of each size every two production hours.

9.2.2 Bend tests for coating flexibility shall be conducted on at least one bar of each size every four production hours.

9.3 Coating adhesion as measured by cathodic disbondment testing shall be conducted on at least one bar every eight production hours.

NOTE 12—The coated steel reinforcing bars to be tested for coating adhesion should be selected from the bar sizes being coated and from positions on the production line so as to be representative of the overall coating process.

10. Retests

10.1 If the specimen for coating thickness or flexibility fails to meet the specified requirements, two retests on random samples shall be conducted for each failed test. If the results of both retests meet the specified requirements, the coated steel reinforcing bars represented by the samples shall be accepted.

11. Permissible Amount of Damaged Epoxy Coating and Repair of Damaged Epoxy Coating

11.1 The maximum amount of repaired damaged epoxy coating shall not exceed 1 % of the total surface area in each 1 ft [0.3 m] of the bar. This limit on repaired damaged epoxy coating shall not include sheared or cut ends that are coated with patching material (see 11.4).

11.2 All damaged epoxy coating due to fabrication or handling (to the point of shipment) shall be repaired with patching material.

NOTE 13—If the amount of repaired damaged epoxy coating in any 1-ft [0.3-m] length of a coated bar exceeds 1 %, that section should be removed from the coated steel reinforcing bar and discarded. In patching damaged epoxy coating, care should be taken not to apply the patching material over an excessive area of the intact coating during the repair process. Too large an area of thick patching material especially on smaller-size reinforcing bars is likely to cause a reduction in bond strength of the bars to concrete.

11.3 Repaired areas shall have a minimum coating thickness of 7 mils [175 μm].

11.4 When coated bars are sheared, saw-cut or cut by other means during the fabrication process, the cut ends shall be coated with patching material. Coated steel reinforcing bars shall not be flame cut.

11.5 Repair of damaged epoxy coating shall be done in accordance with the patching material manufacturer's written recommendations.

12. Inspection

12.1 The inspector representing the purchaser shall have free entry at all times to the parts of the manufacturer's coating line that concern the manufacture of the coated steel reinforcing bars ordered. The manufacturer shall afford the inspector all reasonable facilities to satisfy the inspector that the coated steel reinforcing bars are being furnished in accordance with this specification. All tests and inspection shall be made at the place of manufacture prior to shipment, unless otherwise specified, and shall be so conducted as not to interfere unnecessarily with the operation of the coating line. At a mutually agreed upon frequency, the purchaser or the purchaser's representative shall be permitted to take lengths of coated steel reinforcing bar from the production run for testing.

13. Rejection

13.1 Coated steel reinforcing bars represented by test specimens that do not meet the requirements of this specification shall be rejected and marked with contrasting color paint or other suitable identification. At the manufacturer's option, the affected lot shall be replaced or, alternatively, stripped of coating, recleaned, recoated, and resubmitted for acceptance testing in accordance with the requirements of this specification. (A lot shall consist of all of the bars produced since the time of the last test inspection.)

NOTE 14—If the coating is not to be stripped from the rejected steel reinforcing bars, the bars should be scrapped or with the purchaser's approval used as uncoated steel reinforcing bars.

14. Certification

14.1 The purchaser shall be furnished with, at the time of shipment, written certification that samples representing each lot of coated steel reinforcing bars have been either tested or inspected as directed in this specification and the requirements have been met. When specified in the purchase order or contract, a report of the test results shall be furnished.

14.2 A material test report, certificate of inspection, or similar document printed from or used in electronic form from an electronic data interchange (EDI) transmission shall be regarded as having the same validity as a counterpart printed in the certifier's facility. The content of the EDI transmitted document must meet the requirements of the invoked ASTM standard(s) and conform to any EDI agreement between the purchaser and the supplier. Notwithstanding the absence of a signature, the organization submitting the EDI transmission is responsible for the content of the report.

NOTE 15—The industry definition invoked here is: EDI is the computer to computer exchange of business information in a standard format such as ANSI ASC X12.

15. Handling and Identification

15.1 All systems for handling coated steel reinforcing bars shall have padded contact areas. All bundling bands shall be padded or suitable banding shall be used to prevent damage to the coating. All bundles of coated steel reinforcing bars shall be lifted with a strong back, spreader bar, multiple supports, or a platform bridge to prevent bar-to-bar abrasion from sages in the bundles of coated steel reinforcing bars. The bars or bundles shall not be dropped or dragged.

15.2 If circumstances require storing coated steel reinforcing bars outdoors for more than two months, protective storage measure shall be implemented to protect the material from sunlight, salt spray and weather exposure. If the manufacturer stores coated steel reinforcing bars outdoors without protective covering, the date on which the coated bars are placed outdoors shall be recorded on the identification tag on the bundled steel. Coated steel reinforcing bars, whether individual bars or bundles of bars, or both, shall be covered with opaque

Copyright by ASTM Int'l (all rights reserved); Tue Jan 17 11:34:18 EST 2012
Downloaded/printed by
Wes Miller (Gerdau+Knoxville+ZBAR) pursuant to License Agreement. No further reproductions authorized.

polyethylene sheeting or other suitable opaque protective material. For stacked bundles, the protective covering shall be draped around the perimeter of the stack. The covering shall be secured adequately, and allow for air circulation around the bars to minimize condensation under the covering.

15.3 Coated steel reinforcing bars, whether individual bars or bundles of bars, or both, shall be stored off the ground on protective cribbing.

15.4 The identification of all steel reinforcing bars shall be maintained throughout the coating and fabrication processes to the point of shipment.

16. Keywords

16.1 alloy zinc coating; barrier organic coating; coating requirements; concrete reinforcement; corrosion resistance; dual coated; powder coating; steel bars; thermal spray coating (metallization)

ANNEX

(Mandatory Information)

A1. REQUIREMENTS FOR ORGANIC COATINGS FOR DUAL-COATED STEEL REINFORCING BARS

A1.1 Powder Coatings

A1.1.1 This annex covers qualification requirements for barrier organic coatings for protecting steel reinforcing bars from corrosion.

A1.1.2 The powder coating shall be of organic composition except for the pigment, which may be inorganic if used.

A1.2 Test Materials

A1.2.1 A 1-lb [0.50-kg] sample of the powder coating with its generic description and fingerprint (including the method such as infrared spectroscopy or thermal analysis) shall be submitted to the testing agency. The fingerprint and generic description shall become an integral part of the qualification test report.

A1.2.2 A sample of patching material shall be submitted to the testing agency. The product name and a description of the patching material shall be given in the test report.

A1.2.3 The following specimens shall be submitted as a minimum for testing:

(1) Fourteen 4-ft [1.2-m] long No. 6, Grade 60 [No. 19, Grade 420] deformed steel reinforcing bars with a coating thickness of 7 to 12 mils [175 to 300 μm].

(2) Six uncoated and uncleaned No. 6 [No. 19] steel reinforcing bars, 4-ft [1.2-m] long and from the same lot of steel as the coated bars.

(3) Four 4 by 4 by 0.05 in. [100 by 100 by 1.3 mm] steel plates with center holes for Taber abrasers coated to a thickness of 10 ± 2 mils [250 ± 50 μm].

(4) Four free films of coating material with a thickness of 7 to 9 mils [175 to 225 μm]. The films shall be at least 4 by 4 in. [100 by 100 mm].

(5) Fourteen coated No. 6 [No. 19] steel reinforcing bars, 10-in. [0.25-m] long, coated to a thickness of 7 to 12 mils [175 to 300 μm]. The coated steel reinforcing bars shall have their ends sealed with patching material.

A1.2.3.1 Steel reinforcing bars with a nominal diameter within ±0.04 in. [1 mm] of No. 6 [No. 19] bars shall be acceptable for qualification testing.

A1.2.3.2 The coating on the bars and films tested shall be free of holes, voids, contamination, cracks, and damaged areas. The coated bars shall be checked for holidays using a 67.5-V, 80 000-Ω wet–sponge type dc holiday detector in accordance with Test Methods G62. The total number of holidays found on the bar specimens tested shall be reported.

A1.2.3.3 Coating thickness measurements shall be made in accordance with 8.1.

A1.2.3.4 The manufacturer shall specify the method and grade of metal surface preparation and the coating application procedures for the test specimens and for contract production of coated steel reinforcing bars. These procedures shall be listed in the test report.

NOTE A1.1—Production-coated steel reinforcing bars will be required to be manufactured in the same manner as the qualification bars. Therefore, it is necessary that the qualification bars be prepared in the manner proposed for production. Variation in the critical preparation, thermal treatment, and coating procedures known to be allowable without a compromise in quality should also be detailed in the qualification report.

A1.3 Coating Requirements

A1.3.1 *Chemical Resistance*—The chemical resistance of the coating shall be evaluated in accordance with Test Method G20 by immersing coated steel reinforcing bars in each of the following: distilled water, a 3*M* aqueous solution of calcium chloride ($CaCl_2$), a 3*M* aqueous solution of sodium hydroxide (NaOH), and a solution saturated with calcium hydroxide ($Ca(OH)_2$). Specimens without holidays and specimens with intentional holes drilled through the coating 0.25 in. [6 mm] in diameter shall be tested. The temperature of the test solutions shall be 75 ± 3.6°F [24 ± 2°C]. Minimum test time shall be 45 days. The coating must not blister, soften, lose bond, nor develop holidays during this period. The coating surrounding the intentionally made holes shall exhibit no undercutting during the 45-day period.

A1.3.2 *Cathodic Disbondment*—Test Method G8 shall be followed except:

A1.3.2.1 The cathode shall be a 10-in. [250-mm] long coated steel reinforcing bar;

Copyright by ASTM Int'l (all rights reserved); Tue Jan 17 11:34:18 EST 2012
Downloaded/printed by
Wes Miller (Gerdau+Knoxville+ZBAR) pursuant to License Agreement. No further reproductions authorized.

A1.3.2.2 The anode shall be a 6-in. [150-mm] long solid platinum electrode (0.06 in. [1.6 mm] nominal diameter) or platinized wire (0.125 in. [3.2 mm] nominal diameter);

A1.3.2.3 A calomel reference electrode shall be used;

A1.3.2.4 The electrolyte solution shall be 3 % sodium chloride (NaCl) by mass dissolved in distilled water;

A1.3.2.5 The electrolyte solution temperature shall be 75 ± 3.6°F [24 ± 2°C];

A1.3.2.6 The drilled coating defect shall be 0.12 in. [3 mm] in diameter;

A1.3.2.7 A potential of –1.5 V measured against the calomel reference electrode shall be applied and a 10-Ω shunt resistor used; and

A1.3.2.8 The test duration shall be 168 h.

A1.3.2.9 Fig. A1.1 presents the recommended equipment configuration for performing cathodic disbondment testing on straight steel reinforcing bars. The intentional coating defect shall be placed approximately 2 in. [50 mm] from the sealed transverse ribs. It shall be drilled just deep enough to expose a full 0.13-in. [3-mm] diameter in the steel. The test bar shall be inserted with the sealed end of the bar resting on the bottom of the test vessel and electrolyte added until 4 in. [100 mm] of the bar length is submerged.

A1.3.2.10 The tested bars shall be allowed to cool for approximately 1 ± 0.25 h prior to evaluation. Four measurements shall be taken at 0°, 90°, 180°, and 270° and the values averaged. The average coating disbondment radius of the three coated steel reinforcing bars shall not exceed 0.30 in. [7.5 mm] when measured from the edge of the intentional coating defect.

A1.3.3 *Salt Spray Resistance*—The resistance of the coating to a hot, wet corrosive environment shall be evaluated in accordance Practice B117 by exposing 10-in. [250-mm] long coated steel reinforcing bars containing intentional defects to 95 ± 3.6°F [35 ± 2°C] salt spray comprised of 5 % NaCl by mass dissolved in distilled water for 800 ± 20 h. Three intentional 0.12-in. [3-mm] diameter defects shall be drilled through the coating of each test specimen approximately evenly spaced along one side of the bar with the holes centered between deformations. The coated steel reinforcing bars shall be placed horizontally in the cabinet with the damage sites facing the side (90°). The test specimens shall be allowed to cool for approximately 1 ± 0.25 h prior to evaluation. Four measurements shall be taken, at 0°, 90°, 180°, and 270° and the values averaged. The average coating disbondment radius of nine test sites on three coated steel reinforcing bars shall not exceed 0.12 in. [3 mm] when measured from the edge of the intentional coating defect.

A1.3.4 *Chloride Permeability*—The chloride permeability characteristics of the cured coating having a film thickness of 7 to 9 mils [175 to 225 µm] shall be measured on two test films and a control film at 75 ± 3.6°F [24 ± 2°C] for 45 days. The permeability cells shall be of the type shown in Fig. A1.2. Film selected for testing shall be carefully handled and examined for any defects prior to installation in the cell. The cell shall consist of two glass compartments separated by a coating film sandwiched between two glass plates, each having a centered 1-in. [25-mm] hole. One compartment shall contain 5.4 oz [175 mL] of 3*M* NaCl and the other 3.5 oz [115 mL] of distilled water. The activity of chloride ions passing through the film shall be measured using a specific ion meter equipped with a chloride electrode and a double junction reference electrode. Activity measurements shall be converted into concentration values of mole per *M* [L] with a conversion diagram, constructed by plotting measured chloride ion activities versus known chloride ion concentrations. The accumulative concentration of chloride ions permeating through the film shall be less than $1 \times 10^{-4} M$.

A1.3.5 *Coating Flexibility*:

A1.3.5.1 The coating flexibility shall be evaluated by bending three coated steel reinforcing bars 180° (after rebound) around a 6-in. [150-mm] diameter mandrel. The bend shall be

Test Bar Preparation

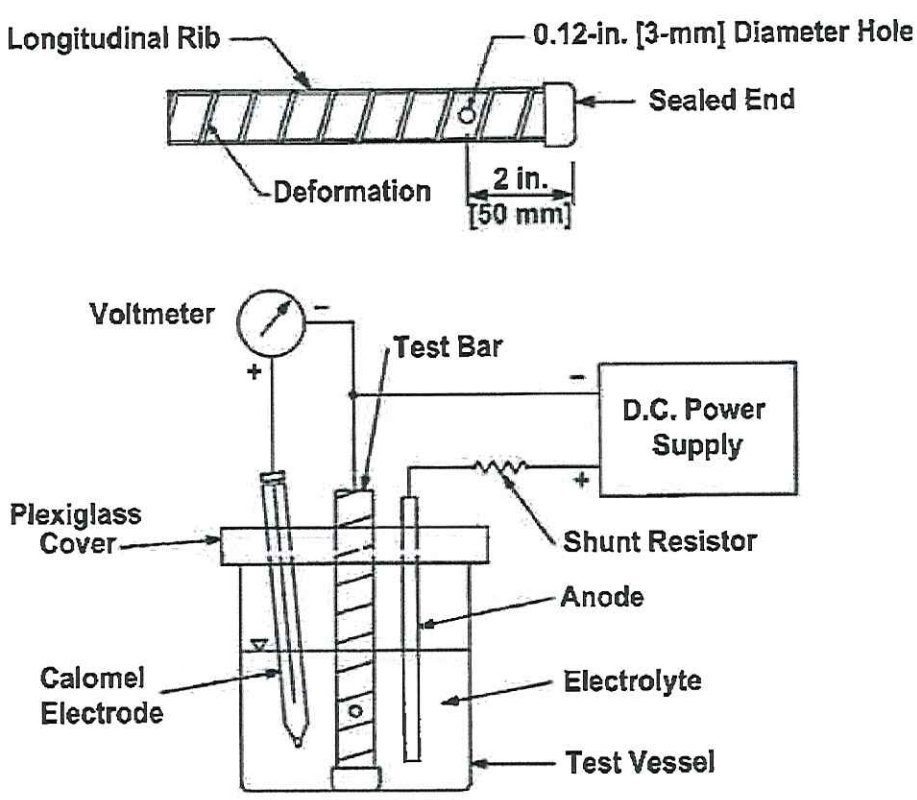

FIG. A1.1 Cathodic Disbondment Test Equipment Configuration

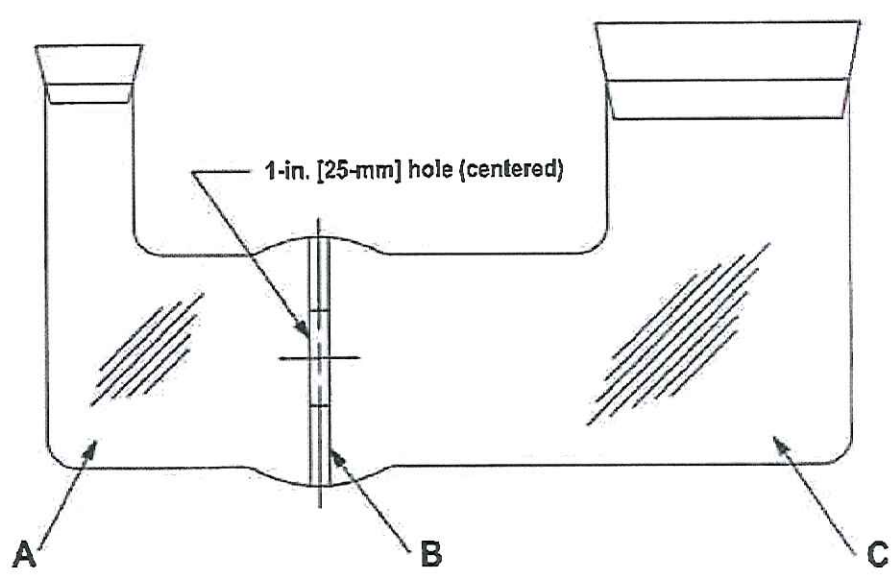

Permeability Cell Components:
A. Component containing distilled water
B. Epoxy film sandwich between two glass plates each having a centered 1-in. [25-mm] diameter hole
C. Component containing 3M NaCl

FIG. A1.2 Chloride Permeability Test Equipment Configuration

Copyright by ASTM Int'l (all rights reserved); Tue Jan 17 11:34:18 EST 2012
Downloaded/printed by
Wes Miller (Gerdau+Knoxville+ZBAR) pursuant to License Agreement. No further reproductions authorized.

made at a uniform rate and completed within a 15-s time period. The two longitudinal ribs shall be placed in a plane perpendicular to the mandrel radius and the specimen shall be between 158 and 176°F [70 and 80°C].

A1.3.5.2 No cracking of the coating shall be visible to a person with normal or corrected vision on the outside radius of any of the three bent-bars.

A1.3.5.3 A test in which fracture or partial failure of the steel reinforcing bar, or cracking or disbonding caused by imperfections in the bar surface visible after performing the bend test occurs, shall be considered an invalid test and the test shall be repeated on a new specimen.

A1.3.6 *Relative Bond Strength in Concrete*—The relative bond strength of the steel reinforcing bars to concrete shall be determined with beam-end specimens by the method described in Test Method A944 using No. 6 [No. 19] steel reinforcing bars with a relative rib area (ratio of projected rib area normal to the bar axis to the product of the nominal bar perimeter and the center-to-center rib spacing) between 0.075 and 0.085. The bars shall be bottom-cast and shall have a cover of 1.5 ± 0.06 in. [40 ± 2 mm], a lead length of 0.5 ± 0.12 in. [13 ± 3 mm], and a bonded length of 10 ± 0.25 in. [250 ± 5 mm]. Test bars shall be oriented so that the longitudinal ribs and direction of rolling, relative to the direction of the applied tension, are the same for coated and uncoated bars. The test bars must be pulled in the same direction with respect to the direction of rolling. Three to six coated bar specimens and three to six uncoated bar specimens shall be tested. All steel reinforcing bars in a test group shall be from the same steel heat. The uncoated bars shall be cleaned only by lightly wiping with acetone or other suitable solvent. The mean bond strength of the coated bars shall not be less than 85 % of the mean bond strength of the uncoated bars.

A1.3.7 *Abrasion Resistance*—The resistance of the coating on each of three steel panels to abrasion by a Taber abraser (Test Method D4060) or its equivalent, using CS-10 wheels and a 2.2-lb [1-kg] load per wheel, shall be such that the weight loss shall not exceed 0.0035 oz [100 mg]/1000 cycles.

A1.3.8 *Impact Test*—The resistance of the steel reinforcing bar coating to mechanical damage shall be determined by the falling weight test. A test apparatus similar to that described in Test Method G14 shall be used along with a 4-lb [1.8-kg] tup having a nose diameter of 0.63 in. [16 mm]. Impact shall occur on the low-lying areas on the coated steel reinforcing bars, that is, between deformations or ribs. The test shall be performed at 75 ± 3.6°F [24 ± 2°C]. With an impact of 80 in.-lbf [9 Nm], no shattering, cracking, or bond loss of the coating shall occur except at the impact area, that is, the area permanently deformed by the tup.

A1.4 Qualification Testing

A1.4.1 *Testing Agency*—Qualification tests shall be performed by an agency acceptable to the purchaser.

A1.5 Certification

A1.5.1 A report summarizing the results of all tests and bearing the signature of the testing laboratory shall be furnished to the manufacturer.

APPENDIX

(Nonmandatory Information)

X1. GUIDELINES FOR JOB-SITE PRACTICES

X1.1 This specification is a product standard. Requirements for zinc and epoxy dual-coated steel reinforcing bars from the point of shipment to the job-site and subsequent practices at the job-site are not delineated in this product standard.

X1.2 The American Concrete Institute has published "Specifications for Structural Concrete (ACI 301)." Standard Specifications ACI 301 is intended to be used in its entirety in the project specifications. An architect-engineer may cite Standard specifications ACI 301 in the project specifications for any cast-in-place concrete construction project. Standard Specifications ACI 301 includes provisions for fusion-bonded powder coated steel reinforcing bars.

X1.3 The project specifications should prescribe requirements for the coated steel reinforcing bars from the point of shipment to the job-site and subsequent practices at the job-site. In the absence of these requirements in the project specifications, the following guidelines for job-site practices are recommended:

X1.3.1 When handling coated steel reinforcing bars, care should be exercised to avoid bundle-to-bundle or bar-to-bar abrasion.

X1.3.2 Equipment for handling coated steel reinforcing bars should have protected contact areas.

X1.3.3 Coated steel reinforcing bars should be off-loaded as close as possible to their points of placement or under the crane so that the bars can be hoisted to the area of placement to minimize re-handling.

X1.3.4 Coated steel reinforcing bars should be stored off the ground on protective cribbing, and timbers placed between bundles when stacking is necessary. Space the supports sufficiently close to prevent sags in the bundles.

X1.3.5 Coated and uncoated steel reinforcing bars should be stored separately.

X1.3.6 Long-term storage should be minimized and work stoppages phased to suit construction progress.

X1.3.7 If circumstances require storing coated steel reinforcing bars outdoors for more than two months, protective

Copyright by ASTM Int'l (all rights reserved); Tue Jan 17 11:34:18 EST 2012
Downloaded/printed by
Wes Miller (Gerdau+Knoxville+ZBAR) pursuant to License Agreement. No further reproductions authorized.

storage measures should be implemented to protect the material from sunlight, salt spray, and weather exposure. If the coated steel reinforcing bars are stored outdoors without cover, it is recommended that the date on which the coated bars are placed outdoors be recorded on the identification tag on the bundled steel. Coated steel reinforcing bars stored in corrosive environments may require protection sooner. Coated steel reinforcing bars or bundles should be covered with opaque polyethylene sheeting or other suitable opaque protective material. For stacked bundles, the protective covering should be draped around the perimeter of the stack. The covering should be secured adequately and allow for air circulation around the bars to minimize condensation under the covering.

X1.3.8 When the extent of damaged coating exceeds 2 % of the surface area of the coated steel reinforcing bar in any 1-ft [0.3-m] length, the coated bar should be rejected.

X1.3.9 When the extent of the damage does not exceed 2 % of the surface area in any 1-ft [0.3-m] length, all damaged coating discernible to a person with normal or corrected vision should be repaired with patching material.

NOTE X1.1—If the amount of repaired damaged coating in any 1-ft [0.3-m] length of a coated bar exceeds 2 %, that section should be removed from the coated steel reinforcing bar and discarded. In patching damaged coating, care should be taken not to apply the patching material over an excessive area of the intact coating during the repair process. Too large an area of thick patching material, especially on smaller-size reinforcing bars, is likely to cause a reduction bond strength of bar to concrete.

X1.3.10 Coated steel reinforcing bars should not be flame cut.

X1.3.11 Placed coated steel reinforcing bars should be inspected for damaged coating prior to placing concrete. Where damage exists, it should be repaired with patching material complying with this specification.

X1.3.12 Patching material should be applied in strict accordance with the written instructions furnished by the patching material manufacturer. Prior to application of the patching material, rust should be removed from the damaged areas by suitable means. The patching material should be allowed to cure before placing concrete over the coated steel reinforcing bars.

X1.3.13 When placing coated steel reinforcing bars, all wire bar supports, spacers, and tying wire should be coated with dielectric material, for example, an epoxy-coated or plastic-coated material compatible with concrete.

X1.3.14 After placing, walking on coated steel reinforcing bars should be minimized. The placement of mobile equipment should be planned to avoid damage to the coated bars.

X1.3.15 When immersion-type vibrators are used to consolidate concrete around fusion bonded powder coated steel reinforcing steel bars, the vibrators should be equipped with rubber or nonmetallic vibrator heads.

SUMMARY OF CHANGES

Committee A01 has identified the location of selected changes to this standard since the last issue (A1055 – 08aε1) that may impact the use of this standard. (Approved Dec. 1, 2010.)

(*1*) Revised 7.3, 8.3.1, Note 10, and Annex A1.

ASTM International takes no position respecting the validity of any patent rights asserted in connection with any item mentioned in this standard. Users of this standard are expressly advised that determination of the validity of any such patent rights, and the risk of infringement of such rights, are entirely their own responsibility.

This standard is subject to revision at any time by the responsible technical committee and must be reviewed every five years and if not revised, either reapproved or withdrawn. Your comments are invited either for revision of this standard or for additional standards and should be addressed to ASTM International Headquarters. Your comments will receive careful consideration at a meeting of the responsible technical committee, which you may attend. If you feel that your comments have not received a fair hearing you should make your views known to the ASTM Committee on Standards, at the address shown below.

This standard is copyrighted by ASTM International, 100 Barr Harbor Drive, PO Box C700, West Conshohocken, PA 19428-2959, United States. Individual reprints (single or multiple copies) of this standard may be obtained by contacting ASTM at the above address or at 610-832-9585 (phone), 610-832-9555 (fax), or service@astm.org (e-mail); or through the ASTM website (www.astm.org). Permission rights to photocopy the standard may also be secured from the ASTM website (www.astm.org/COPYRIGHT/).

Copyright by ASTM Int'l (all rights reserved); Tue Jan 17 11:34:18 EST 2012
Downloaded/printed by
Wes Miller (Gerdau+Knoxville+ZBAR) pursuant to License Agreement. No further reproductions authorized.

Fax#	Project	
From	Job#	Ship Date
Date	PA Insert Quote/Order#	Page _____ of _____

Pennsylvania Insert Corp
PO Box 199
Spring City PA 19475
tel: 610-948-9688
fax: 610-948-4975
email: sales@pennsylvaniainsert.com
web: www.pennsylvaniainsert.com

BOLT POCKET FORMER (for up to 1" bolt)

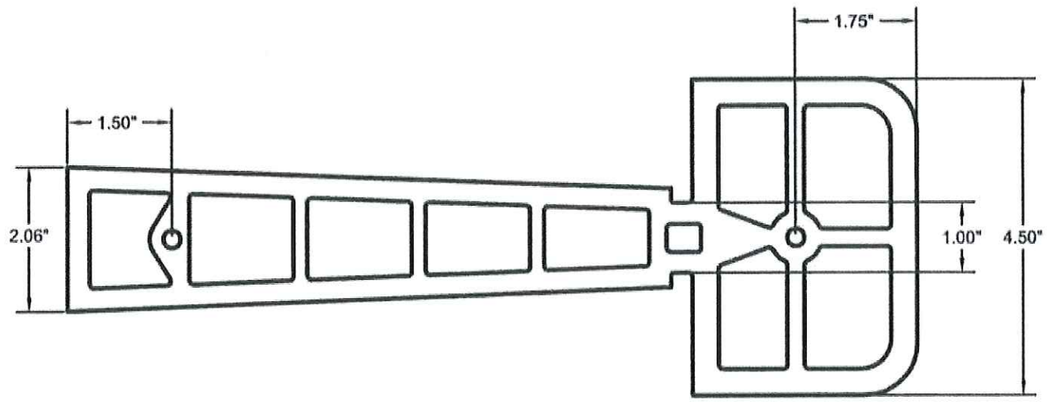

- Made from durable Urethane for reusability
- Ribbed construction increases strength
- *Replacable 1/4" Threaded Inserts
- **1/4" Galvanized Steel Plate Standard
- Available with magnets to attach to form

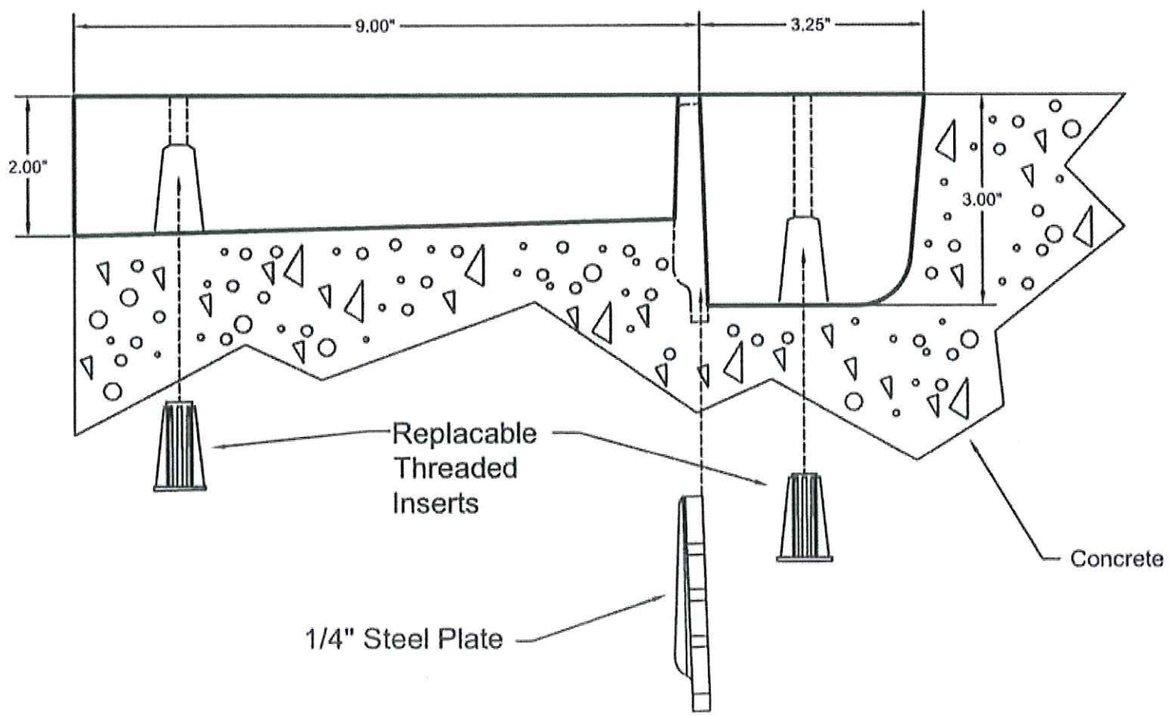

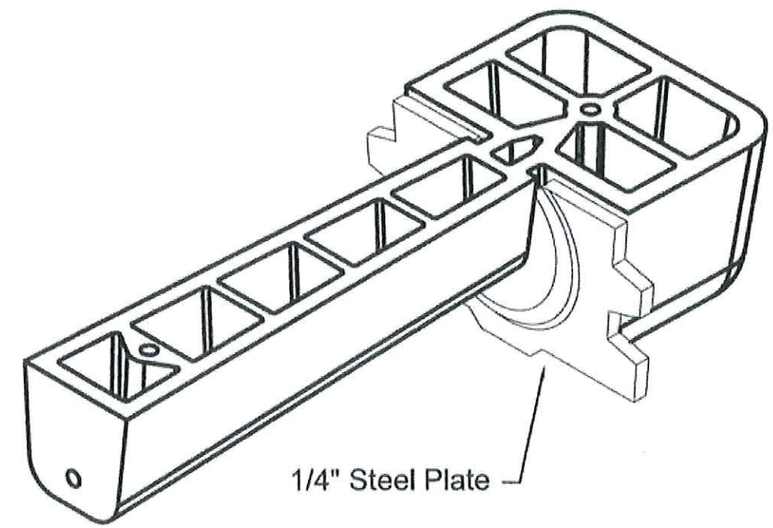

*Threaded Inserts sold separately (Part Number 1200)
**Steel Plate stays in concrete, sold separately (Part Number 4024)

06/03/04

OXFORD Industrial Technologies, LLC

PO Box 736 ▪ Stevenson, CT 06491
www.oxfordtechusa.com
Phone: (203) 268-6030
Fax: (203) 445-1240
info@oxfordtechusa.com

Oxford Lift System®

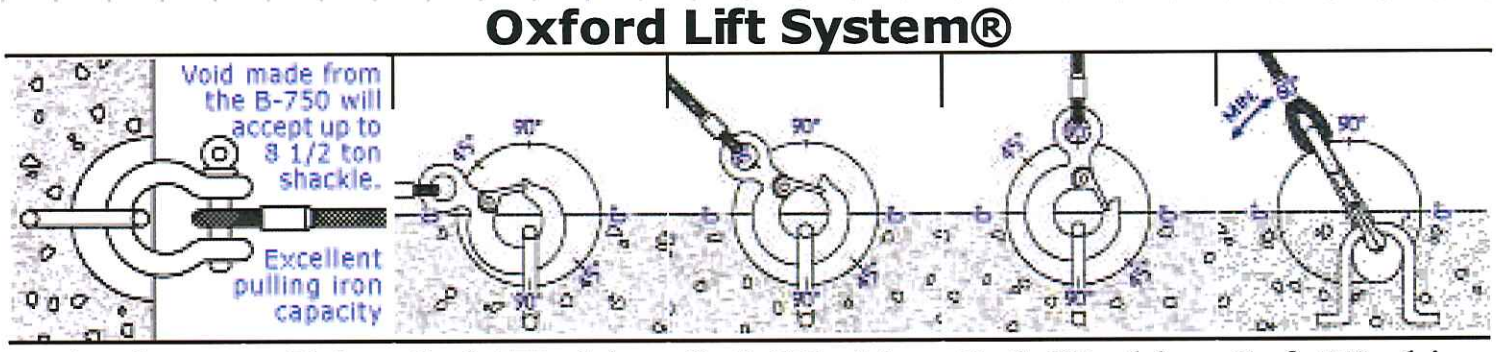

Anchor Product Code	Slab Min. Inches	Safe Working Load @ 90 degree Shear-0 degree Pull	Safe Working Load @ 90 degree Shear-45 degree Pull	Safe Working Load @ 90 degree Tension-90 degree Pull	Safe Working Load @ 90 degree Shear-60 degree Pull
A 500-3	4.00"	4,500	4,000	3,500	4,000
A 500-4	5.00"	8,000	5,500	4,000	5,000
A 500-5	6.00"	10,500	6,500	5,000	5,500
A 750-5	6.00"	12,500	8,000	7,000	7,000
A 750-7	8.00"	15,000	12,500	10,000	10,000

Note: Safe Working Load provides a factor of safety of approximately 4:1

Test Results are based on a minimum concrete compressive strength of 4,000 psi.

<back next>

Home | B-500 & B-750 | S-150 | S-300 | Lift Anchor & Order Form | Concrete Products
Pull Iron Capacity | Anchors & Accessories | Toggle-Lok | Insert/Lift Anchor | Grid-Lok/ Rebar Chair | Helpful Calculations COMING SOON!

Coil Lifting Insert Accessories

(2060) CN-5 COIL NUT

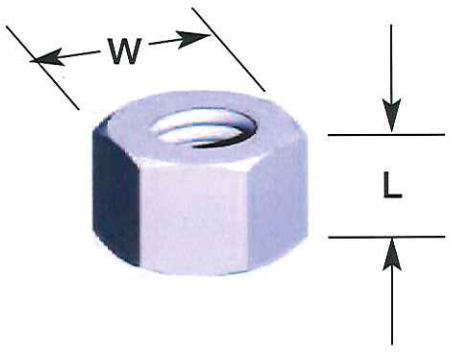

The CN-5 Standard Coil Nut is manufactured from hex stock and is available in 1/2" through 1-1/2" diameters. Dimensions are displayed in the table.

The Standard Coil Nut safe working loads are based on an approximate 5:1 safety factor for lifting applications.

NOTE: Coil Nut – Heavy page 86

CN-5 STANDARD COIL NUT DATA									
Bolt Size		Safe Work Load (Tension)				Nut Length L		Width Across Flats W	
		One CN-5		Two CN-5 or One CN-25					
in.	mm	lbs.	kN	lbs.	kN	in.	mm	in.	mm
1/2	13	1800	8	3600	16	1/2	13	7/8	22
3/4	19	3600	16	7200	32	5/8	15	1 1/8	28
1	25	7200	32	15,000	67	1	25	1 5/8	41
1 1/4	32	10,800	48	22,500	100	1 1/4	32	2	50
1/1/2	38	16,200	72	27,000	120	1 1/2	38	2 3/8	60

Table is based on a 5:1 safety factor for lifting applications.

1) Note that in order to achieve the published safe working loads of Coil Bolts, Coil Rods, etc., two (2) Standard Coil Nuts tightly locked together are required when using the Standard Coil Nut.

To Order, Specify: quantity, name and bolt diameter.

(2062) CN-25 COIL NUT – HEAVY

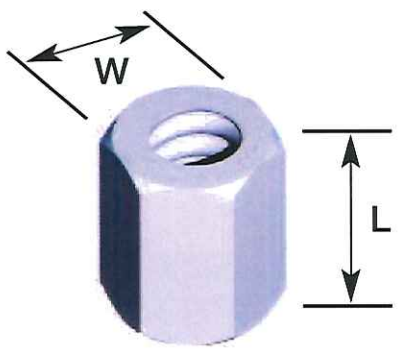

The CN-25 Heavy Coil Nut is manufactured from hex stock like the Standard Coil Nut, but is of sufficient length to develop the safe working load required for heavy form tying systems and precast lifting applications.

The Heavy Coil Nut safe working loads are based on an approximate 5:1 safety factor for lifting applications.

CN-25 HEAVY COIL NUT DATA							
Bolt Size		Safe Work Load (Tension)		Nut Length L		Width Across Flats W	
		Two CN-5 or One CN-25					
in.	mm	lbs.	kN	in.	mm	in.	mm
1/2"	13	3600	16	1	25	7/8	28
3/4"	19	7200	32	1 1/2	38	1 1/8	28
1"	25	15,000	67	2	50	1 5/8	41
1 1/4"	32	22,500	100	2 1/2	64	2	50

Table is based on a 5:1 safety factor for lifting applications.

To Order, Specify: quantity, name and bolt diameter.

Coil Lifting Insert Accessories

(2080) CW-4 FLAT WASHER

The CW-4 Flat Washers are manufactured from high carbon flat steel plate and are designed to provide the required bearing against the form members. Flat Washers are available in many sizes in both standard and heavy versions. Refer to the table for dimensions and safe working loads.

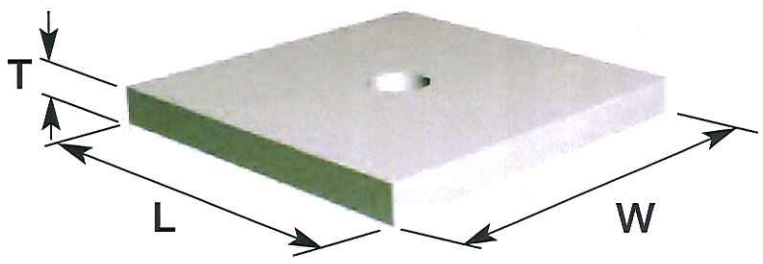

Flat Washer Safe working loads are based on an approximate 5:1 safety factor for lifting applications.

CW-4 FLAT WASHER DATA

Bolt Size		Type	T		L		W	
in.	mm		in.	mm	in.	mm	in.	mm
1/2	13	Standard	1/4	6	4	100	3	75
3/4	19	Standard	1/4	6	4	100	5	125
1	25	Standard	1/2	13	5	125	5	125
1 1/4	32	Standard	1/2	13	5	125	5	125
1 1/2	38	Standard	3/4	19	5	125	5	125
1/2	13	Heavy	1/4	6	4	100	5	125
3/4	19	Heavy	1/2	13	5	125	5	125
1	25	Heavy	3/	19	7	175	7	175
1 1/4	32	Heavy	3/4	19	7	175	7	175
1 1/2	38	Heavy	3/4	19	7	175	7	175

To Order, Specify: quantity, name and bolt diameter.

(2102) CR-4 COIL ROD

CR-4 Continuous Coil Rod is manufactured and stocked in 12'-0" lengths. Special lengths are available up to 20'-0".

Requires minimum two (2) Standard CN-5 Coil Nuts or one (1) Heavy CN-25 Coil Nut to develop full safe work load. Minimum coil thread penetration is same as shown for coil bolts. See Table on page 88 to assure minimum coil penetration. May be cut with carborundum blades without thread damage. Do not use cutting torch to cut coil rod.

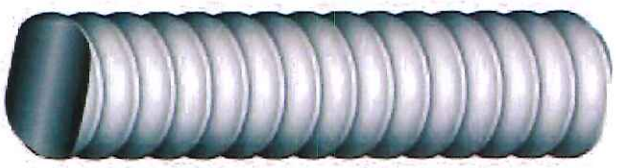

CR-4 HI-STRENGTH CONTINUOUS COIL ROD SELECTION TABLE

Bolt Diameter		Safe Work Load			
		Tension		Shear	
In.	mm.	lbs.	kN.	lbs.	kN.
1/2	13	3600	16	2400	11
3/4	19	7200	32	4800	21
1	25	15000	67	10000	44
1-1/4	32	24000	107	16000	71
1-1/2	38	28000	124	18000	83

Table is based on a 5:1 safety factor for lifting applications.

To Order, Specify: quantity, name, bolt diameter and length.

FI-42: FLARED LOOP FERRULE INSERT

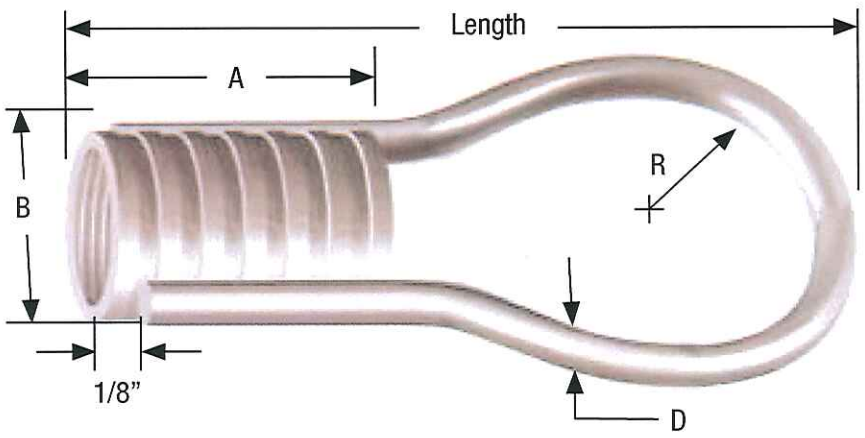

Fabricated by welding a looped strut to a closed-end ferrule, this versatile insert is commonly used to make structural connections and to suspend pipes and other mechanical equipment. Available in 3/8", 1/2", 5/8", 3/4", 7/8" and 1" sizes. Insert available in plated finish.

*Standard inserts not designed for use with hot dip galvanized bolts.

FLARED LOOP FERRULE INSERT DIMENSIONS AND LOAD CHART

Part Number	Bolt Diameter (N.C. Thread)	Threads per Inch (N.C.)	Length	A	B	R	Wire Diameter D	Insert vUltimate Mechanical Capacity (lbs)	In-Concrete Capacity: Min. Edge Distance	In-Concrete Capacity: 3:1 Safe Working Load Tension (lbs)
FI4238P	3/8"	16	2-3/4"	1-1/4"	1"	9/16"	0.243"	6,000	5"	2,000
FI4212P	1/2"	13	2-3/4"	1-3/8"	1-1/8"	9/16"	0.243"	6,000	5"	2,000
FI4258P	5/8"	11	3-1/2"	1-5/8"	1-3/8"	13/16"	0.262"	6,900	5"	2,300
FI4234P	3/4"	10	3-1/2"	1-5/8"	1-5/8"	13/16"	0.262"	7,500	5"	2,500
FI4278P	7/8"	9	6"	1-5/8"	2-1/16"	1-3/8"	0.375"	15,900	8"	5,300
FI421P	1"	8	6"	1-5/8"	2-1/16"	1-3/8"	0.375"	15,900	8"	5,300

- Safe working Load is based on 3,000 psi concrete and insert setback 1/2" from the concrete surface.
- Minimum spacing of inserts is 2 x (edge distance).

FI-64: STRAIGHT LOOP FERRULE INSERT

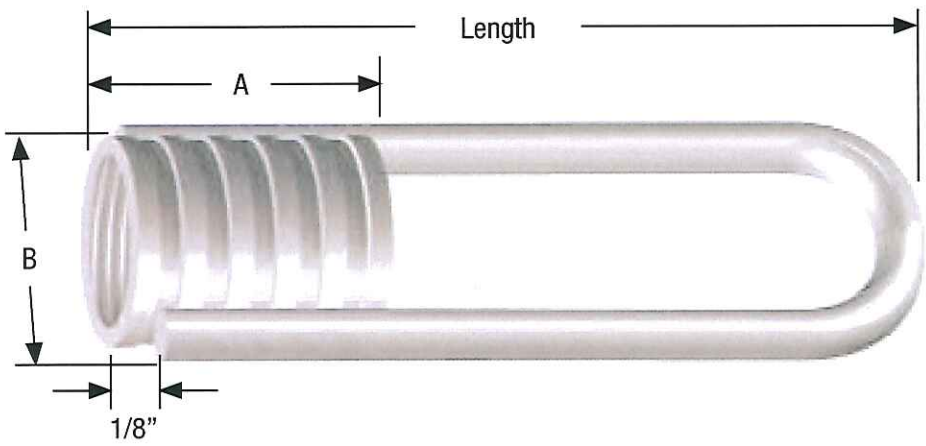

The Straight Loop Ferrule Insert is typically used to attach a precast wall panel to a building frame, as well as to provide attachment of other structural elements that may be required. Available in 1/2", 5/8", 3/4" and 1" sizes. Insert available in plated finish.

*Standard inserts not designed for use with hot dip galvanized bolts.

STRAIGHT LOOP FERRULE INSERT DIMENSIONS AND LOAD CHART

Part Number	Bolt Diameter	Threads per Inch (N.C.)	Length	A	B	Wire Diameter D	Insert Ultimate Mechanical Capacity (lbs)	In-Concrete Capacity: Min. Edge Distance	In-Concrete Capacity: 3:1 Safe Working Load Tension (lbs)
FI64124P	1/2"	13	4-1/8"	1-3/8"	1-1/8"	0.225"	9,000	5"	3,000
FI64126P	1/2"	13	6-1/8"	1-3/8"	1-1/4"	0.306"	15,000	8"	5,000
FI64584P	5/8"	11	4-1/8"	1-5/8"	1-1/4"	0.225"	9,000	5"	3,000
FI64586P	5/8"	11	6-1/8"	1-5/8"	1-5/8"	0.375"	15,000	8"	5,000
FI64344P	3/4"	10	4-1/8"	1-5/8"	1-3/8"	0.225"	9,000	5"	3,000
FI64346P	3/4"	10	6-1/8"	1-5/8"	1-3/4"	0.375"	15,000	9"	5,000
FI6416P	1"	8	6-1/8"	1-5/8"	2-1/8"	0.375"	15,000	9"	5,000

- Safe working Load is based on 3,000 psi concrete, 3:1 safety factor and insert setback 1/2" from the concrete surface.
- Minimum spacing of inserts is 2 x (edge distance).

Headwall connection

CELLULAR JOINT FILLER

CLOSED-CELL GASKET MATERIAL

What It Is

CLOSED CELL JOINT FILLER is a flexible, compressible material that easily fills difficult joints in concrete pipes and structures. Whether glued onto the joint or placed between the structures, it quickly conforms to the joint profile. CLOSED CELL JOINT FILLER can be supplied as cut and spliced gaskets or as bulk material for field fabrication of gaskets. It has excellent compressibility and is resistant to weather, ozone, acids, and alkalis.

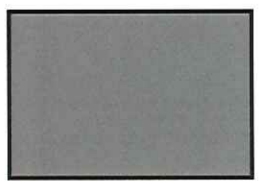

1" x 1" (25 x 25 mm)
25 FT. (7.6 m) ROLLS

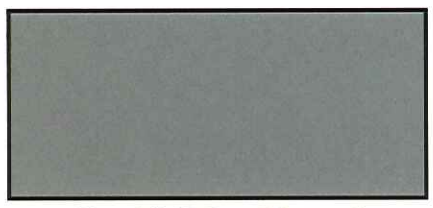

1" x 2" (25 x 50 mm)
25 FT. (7.6 m) ROLLS

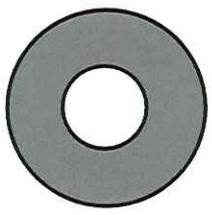

ROUND 3/8" (10 mm) WALL
250 FT. (76.2 m) ROLLS

ROUND 1/2" (13 mm) WALL
250 FT. (76.2 m) ROLLS

Why It's Better

- Works with Round, Elliptical, and Arch Pipe.
- Works with Box Culverts and Manholes.
- Available in 25' (7.6 m) or 250' (76.2 m) rolls, or by the foot.
- Also available as cut and spliced gaskets.
- Manufactured of high-quality synthetic rubber.
- Easily compresses to fill irregular joints.
- Clean and easy to use.
- May be used in place of trowelable sealants.
- Easily cut and spliced in the field or in your yard.
- May be glued directly to the joint.

How It Performs

CLOSED CELL JOINT FILLER MATERIAL *meets or exceeds all requirements of:*

ASTM D-1056 - *Flexible Cellular Materials - Sponge or Expanded Rubber*

RECTANGULAR CROSS-SECTIONS
are made from a Neoprene/EPDM Blend.

CIRCULAR TUBING CROSS-SECTIONS
are made from a Nitrile/PVC blend.

Typical Physical Properties

Color ..... Black	Density (pcf) average .....5.5 - 7.5
Compression Deflection (psi) .....5 - 9	Water Absorption by Weight (Max.).....10%
Tensile Strength (psi Min.) 30	Temperature Range (F)
Elongation (%Min.) 125	Low (Flex without cracking) .....-70
Resilience - Bashore (% rebound Average)	High (Continuous) 150
(1/2" thickness @ 72°F) .....25 - 40	High (Intermittent) 200
Shore 00 Durometer .....45 - 60	Heat Aging (7 days @ 158°F)
	Lineal Shrinkage (Max.) 10%

Scan (or click) Here To View More Info On This Product On The Web!

Press-Seal believes all information is accurate as of its publication date. Information, specifications, and prices are all subject to change without notice. Press-Seal is not responsible for any inadvertent errors. Copyright 2012.

PRESS-SEAL GASKET CORPORATION
Protecting Our Planet's Clean Water Supply
Press-Seal Gasket is an ISO 9001:2008 Registered & ISO 14001:2004 Compliant Company

Phone: 800-348-7325
Fax: (260) 436-1908
Email: sales @press-seal.com
Web: www.press-seal.com

Made in USA

VERSION 1.14