S.D. Ireland Companies
Precast Division

193 Industrial Ave. Williston, VT 05495
P.O. Box 2286 South Burlington, VT 05407
p: 802-863-6222 f: 802-860-1528
www.sdireland.com

Attention:	Ted Luck	Date:	6/2/2014
Company:	Luck Brothers	Job Name:	Warren BRF 013-4(32)
Address:		Job Number:	SDI #14046
City, St, Zip:		Regarding:	RFI #1
Ph: / Fax:			

WE ARE SENDING:

- [ ] Quote
- [ ] Details
- [ ] Other: _____
- [x]
- [ ] Prints
- [ ] Plans
- [ ] Specifications
- [ ] Copy Of Letter
- [ ] Change Order
- [ ] Samples
- [ ] Revised Submittals

Copies	Date	Pages	Description
1	6/2/2014	1	Transmittal Cover
1	6/2/2014	4	Fabrication drawings

These Are Submitted as Checked Below:

- [ ] For Approval
- [ ] Approved as Submitted
- [ ] Resubmit __ Copies for Approval
- [ ] For Your Use
- [ ] Approved as Noted
- [ ] Submit__ Copies for Distribution
- [x] As Requested
- [ ] Returned for Corrections
- [ ] Return __ Corrected Prints
- [x] For Review and Comment
- [ ] Prints Returned After Loan to Us
- [ ] For Bids Due: _____
- [ ] Other:

Notes/Remarks: Request for omission of rebar

On the 17th of April our dual coated reinforcing supplier provided a reinforcing detail addressing the resolution of rebar 7CZ01, 02, 03, and 7CZ04, as suggested by MacFarland Johnson. See attached.
Our fabricator inadvertantly ADDED rebar 5CZ08. As focus was on the above change and acceptance this added rebar was overlooked. Attached
It is requested we be allowed to "eliminate" this interfering bar. This was bar not designed into the abutment to begin with.

Thank you.

Tim Dudley 802-863-6222 ext 253
tdudley@sdireland.com

Copy To: _____

Signed:

If enclosures are not as noted, kindly notify us at once.

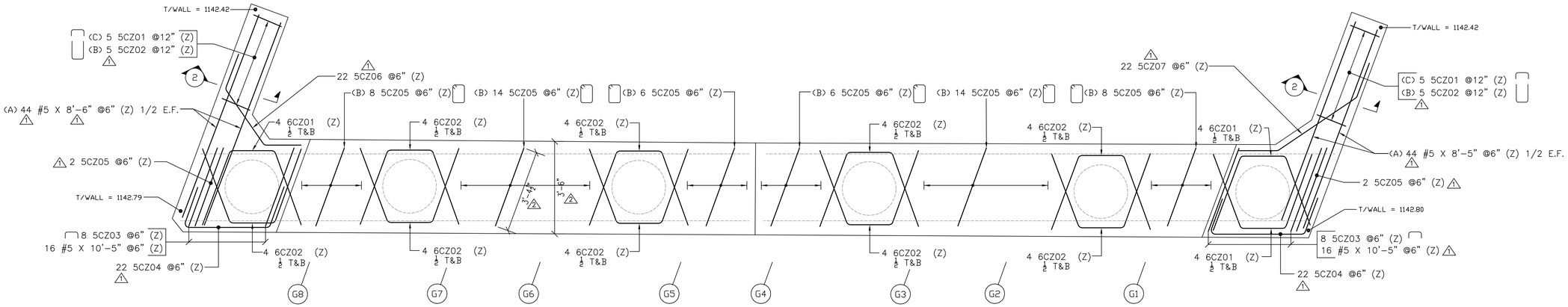

ABUTMENT #1 PLAN

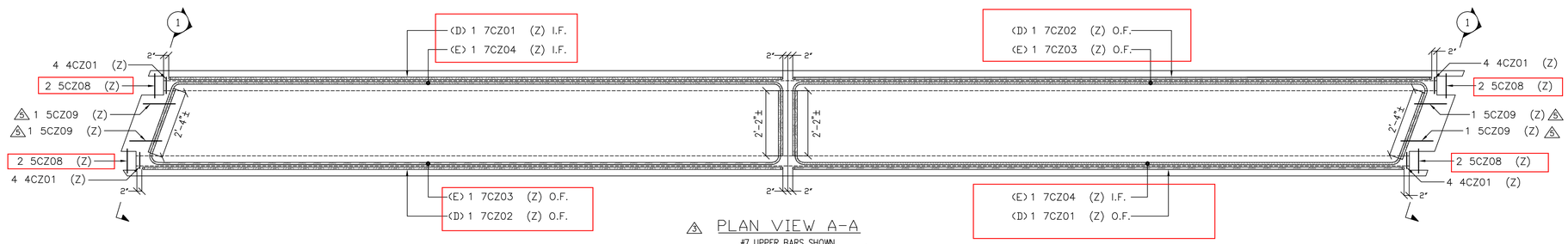

PLAN VIEW A-A

#7 UPPER BARS SHOWN
#5 HORIZONTALS, #6 BENDS &
#5 TIES NOT SHOWN FOR CLARITY

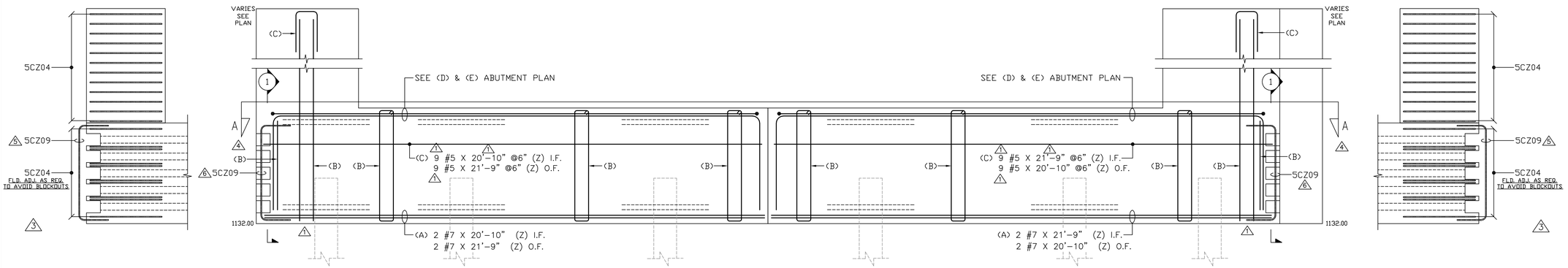

ABUTMENT #1 ELEVATION

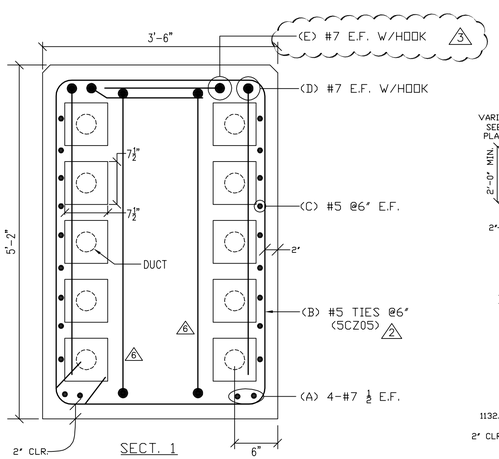

SECT. 1

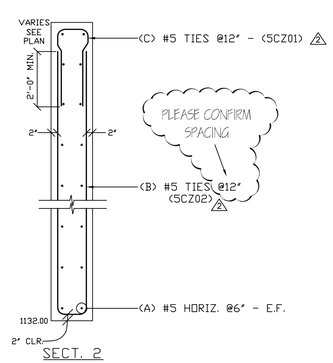

SECT. 2

BAR LIST

Drawing Sheet : C

Bar Mark	Qty	Size	Total Length	Type	'A'	'B'	'C'	'D'	'E'	'F'	'G'	'H'	'J'	'K'	'O'	'R'
4CZ01	16	#4	3'-9"	T2	0'-4 ½"	0'-9"	0'-9"	0'-9"	0'-9"		0'-4 ½"					
5CZ01	10	#5	6'-4"	17		2'-7"	1'-2"	2'-7"								
5CZ02	10	#5	21'-2"	17		10'-0"	1'-2"	10'-0"								
5CZ03	16	#5	5'-0 ½"	17		0'-10"	3'-4 ½"	0'-10"								
5CZ04	44	#5	7'-6"	S13		2'-0"	3'-6"	2'-0"				3'-3 ½"		1'-2 ¼"	1'-2 3/8"	
5CZ05	60	#5	17'-4"	T1	0'-5 ½"	3'-4 ½"	4'-10"	3'-4 ½"	4'-10"		0'-5 ½"					
5CZ06	22	#5	6'-0"	22D			2'-0"	2'-9"	1'-3"			1'-8"	1'-1 ¼"	1'-0 ¼"		0'-8 ¾"
5CZ07	22	#5	7'-0"	22D			2'-0"	3'-7"	1'-5"			1'-2"	1'-7 ½"	0'-9 ½"		1'-2"
6CZ01	12	#6	7'-8"	3			3'-0"	1'-8"	3'-0"			2'-9 ¾"		1'-0 ¼"	3'-10"	
6CZ02	36	#6	7'-8"	3			3'-0"	1'-8"	3'-0"			2'-9 ¾"		1'-0 ¼"	3'-9 ¾"	
7CZ01	2	#7	30'-1"	17		4'-10"	20'-5"	4'-10"								
7CZ02	2	#7	31'-0"	17		4'-10"	21'-4"	4'-10"								
7CZ03	2	#7	26'-1 ½"	21		2'-6"	20'-11"	2'-8 ½"				2'-7"		0'-9 ¾"		
7CZ04	2	#7	25'-2 ½"	16		2'-6"	20'-2"	2'-6 ½"				2'-4 ½"		0'-10 ¾"	21'-0 7/8"	
5CZ08	8	#5	6'-0"	1	0'-7"	4'-10"					0'-7"		0'-5"			
5CZ09	4	#5	10'-0"	17		2'-7"	4'-10"	2'-7"								

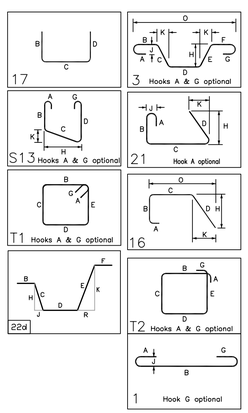

LEGEND:
CONT.-CONTINUOUS
TRANS.-TRANSVERSE
DWLS.-DOWELS
VERTS.-VERTICAL
HORIZ.-HORIZONTAL
T&B -TOP & BOTTOM
I.F.-INNER FACE
O.F.-OUTER FACE
E.E.-EACH END
E.F.-EACH FACE
F.F.-FRONT FACE
R.F.-REAR FACE
E.W.-EACH WAY
O.C.-ON CENTER
L.W.-LONG WAY
S.W.-SHORT WAY

FOR FIELD USE

ALL DUAL COATED REINF. DENOTED (Z)

ELEVATIONS & DIMENSIONS SHOWN ON THIS DWG. ARE FOR REINF. DETAILING PURPOSES ONLY AND ARE NOT INTENDED FOR CONSTRUCTION.

REINF. BARS ASTM A615 GRADE 60 DUAL COATED

VERIFICATION OF UNCLEAR INFORMATION MAY BE REQUESTED ON THIS DRAWING. SHOULD VERIFICATION BE LEFT UN-ADDRESSED IT WILL REMAIN AS SHOWN AND ASSUME TO BE CORRECT.

8			
7	4-30-14	6	REVISED/SDI/FOR JOB USE
6	4-18-14	5	APPROVED AS NOTED
5	4-17-14	4	REVIEWED/SDI COM./FOR APPROVAL
4	4-17-14	3	REVIEWED/SDI COM./FOR APPROVAL
3	4-08-14	2	REVIEWED/ENG COM./FOR APPROVAL
2	2-24-14	1	DFI INTERNAL REVIEW/FOR APPROVAL
1	2-18-14		FOR APPROVAL
	DATE	REV.#	SENT FOR

DIMENSION
DIMENSION FABRICATORS INC.
2000 7TH STREET
SCOTIA, N.Y. 12302
PH: (518) 374-1936
FAX (518) 374-4830
www.dimensionfabricators.com

STRUCTURE	VTAOT WARREN BRF 013-4(32) PRECAST
LOCATION	BRIDGE 166 ROUTE 100 (MINOR ARTERIAL) WARREN, VT
ARCHITECT	
ENGINEER	
CUSTOMER	S.D. IRELAND CONCRETE CONST. CORP.
DRAWN BY ED	DATE 2/18/14
DFI #	8756
DRAWING COVERS	ABUTMENT #1 DUAL COATED REINFORCING
DRAWING #	C

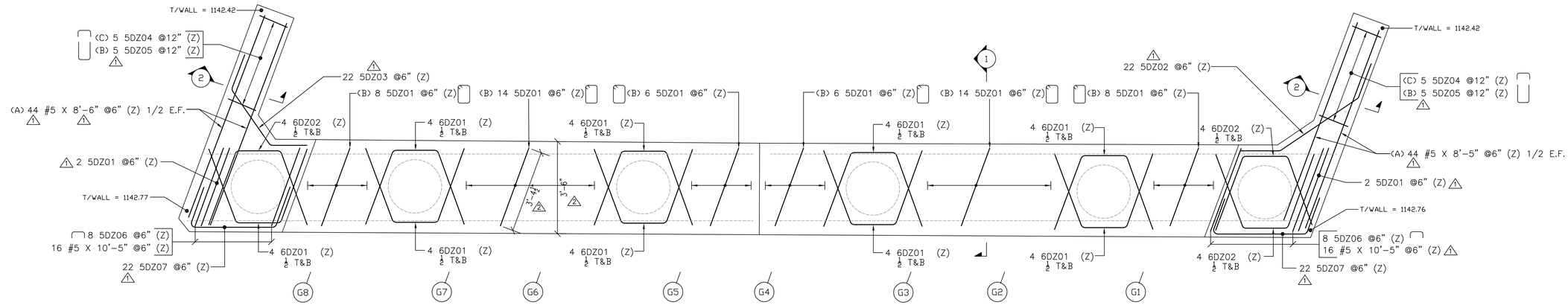

ABUTMENT #2 PLAN

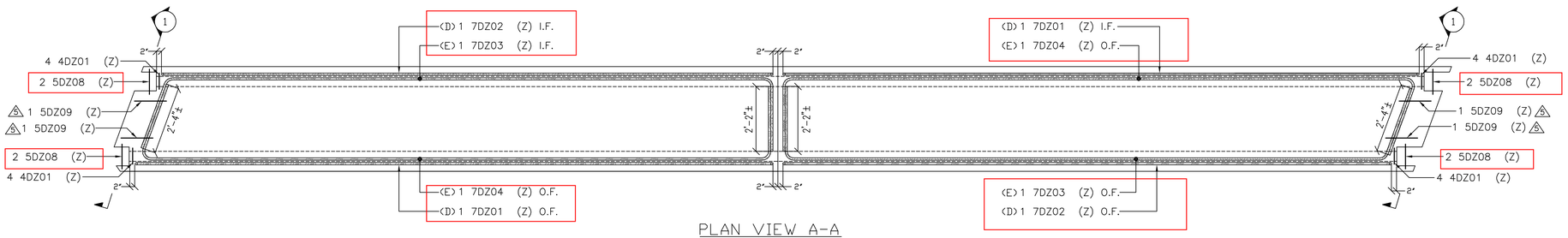

PLAN VIEW A-A

#7 UPPER BARS SHOWN
#5 HORIZONTALS, #6 BENDS &
#5 TIES NOT SHOWN FOR CLARITY

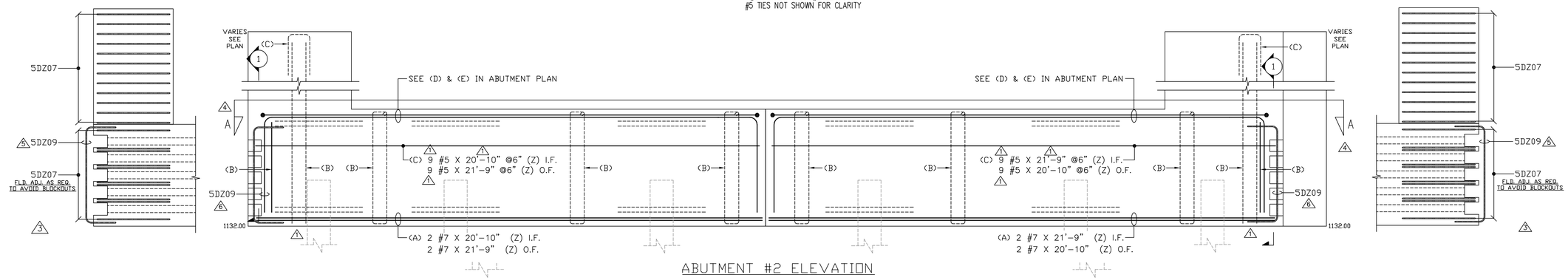

ABUTMENT #2 ELEVATION

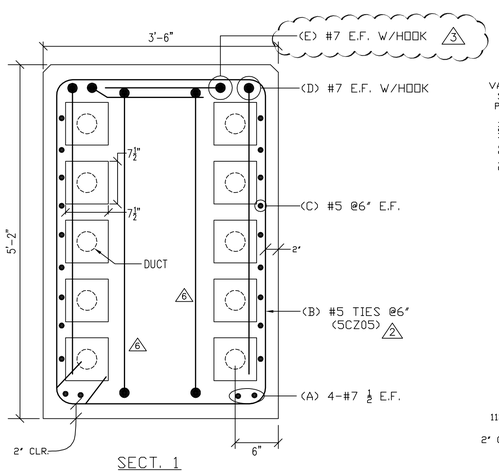

SECT. 1

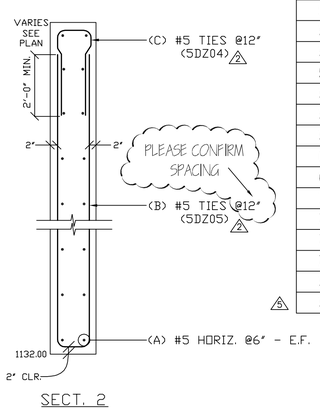

SECT. 2

BAR LIST

Drawing Sheet : D

Bar Mark	Qty	Size	Total Length	Type	'A'	'B'	'C'	'D'	'E'	'F'	'G'	'H'	'J'	'K'	'O'	'R'
4DZ01	16	#4	3'-9"	T2	0'-4 ½"	0'-9"	0'-9"	0'-9"	0'-9"		0'-4 ½"					
5DZ01	60	#5	17'-4"	T1	0'-5 ½"	3'-4 ½"	4'-10"	3'-4 ½"	4'-10"		0'-5 ½"					
5DZ02	22	#5	7'-0"	22D			2'-0"	3'-7"	1'-5"			1'-2"	1'-7 ½"	0'-9 ½"		1'-2"
5DZ03	22	#5	6'-0"	22D			2'-0"	2'-9"	1'-3"			1'-8"	1'-1 ¼"	1'-0 ¼"		0'-8 ¾"
5DZ04	10	#5	6'-4"	17		2'-7"	1'-2"	2'-7"								
5DZ05	10	#5	21'-2"	17		10'-0"	1'-2"	10'-0"								
5DZ06	16	#5	5'-0 ½"	17		0'-10"	3'-4 ½"	0'-10"								
5DZ07	44	#5	7'-6"	S13		2'-0"	3'-6"	2'-0"				3'-3 ½"		1'-2 ¼"	1'-2 3/8"	
6DZ01	36	#6	7'-8"	3			3'-0"	1'-8"	3'-0"			2'-9 ¾"		1'-0 ¼"	3'-9 ¾"	
6DZ02	12	#6	7'-8"	3			3'-0"	1'-8"	3'-0"			2'-9 ¾"		1'-0 ¼"	3'-10"	
7DZ01	2	#7	31'-0"	17		4'-10"	21'-4"	4'-10"								
7DZ02	2	#7	30'-1"	17		4'-10"	20'-5"	4'-10"								
7DZ03	2	#7	25'-2"	16		2'-6"	20'-2"	2'-6"				2'-4 ½"		0'-10 ¾"	21'-0 ¾"	
7DZ04	2	#7	26'-1 ½"	21		2'-6"	20'-11"	2'-8 ½"				2'-7"		0'-9 ¾"		
5DZ08	8	#5	6'-0"	1	0'-7"	4'-10"					0'-7"		0'-5"			
5DZ09	4	#5	10'-0"	17		2'-7"	4'-10"	2'-7"								

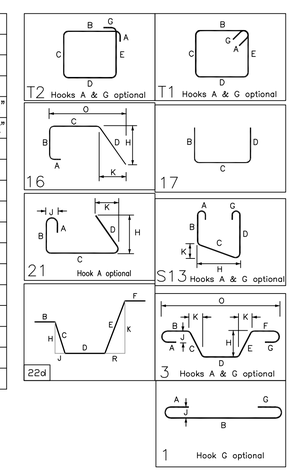

LEGEND:
CONT.-CONTINUOUS
TRANS.-TRANSVERSE
DWLS.-DOWELS
VERTS.-VERTICAL
HORIZ.-HORIZONTAL
T&B -TOP & BOTTOM
I.F.-INNER FACE
O.F.-OUTER FACE
E.E.-EACH END
E.F.-EACH FACE
F.F.-FRONT FACE
R.F.-REAR FACE
E.W.-EACH WAY
O.C.-ON CENTER
L.W.-LONG WAY
S.W.-SHORT WAY

FOR FIELD USE

ALL DUAL COATED REINF. DENOTED (Z)

ELEVATIONS & DIMENSIONS SHOWN ON THIS DWG. ARE FOR REINF. DETAILING PURPOSES ONLY AND ARE NOT INTENDED FOR CONSTRUCTION.

REINF. BARS ASTM A615 GRADE 60 DUAL COATED

VERIFICATION OF UNCLEAR INFORMATION MAY BE REQUESTED ON THIS DRAWING. SHOULD VERIFICATION BE LEFT UN-ADDRESSED IT WILL REMAIN AS SHOWN AND ASSUME TO BE CORRECT.

8			
7	4-30-14	6	REVISED/SDI/FOR JOB USE
6	4-18-14	5	APPROVED AS NOTED
5	4-17-14	4	REVISED/SDI.COM./FOR APPROVAL
4	4-17-14	3	REVISED/SDI.COM./FOR APPROVAL
3	4-08-14	2	REVISED/ENG.COM./FOR APPROVAL
2	2-24-14	1	DFI INTERNAL REVIEW/FOR APPROVAL
1	2-18-14		FOR APPROVAL
	DATE	REV.#	SENT FOR

DIMENSION
DIMENSION FABRICATORS INC.
2000 7TH STREET
SCOTIA, N.Y. 12302
PH: (518) 374-1936
FAX (518) 374-4830
www.dimensionfabricators.com

STRUCTURE	VTAOT WARREN BRF 013-4(32) PRECAST
LOCATION	BRIDGE 166 ROUTE 100 (MINOR ARTERIAL) WARREN, VT
ARCHITECT	
ENGINEER	
CUSTOMER	S.D. IRELAND CONCRETE CONST. CORP.
DRAWN BY ED	DATE 2/18/14
DRAWING COVERS ABUTMENT #2 DUAL COATED REINFORCING	DFI # 8756 / DRAWING # D

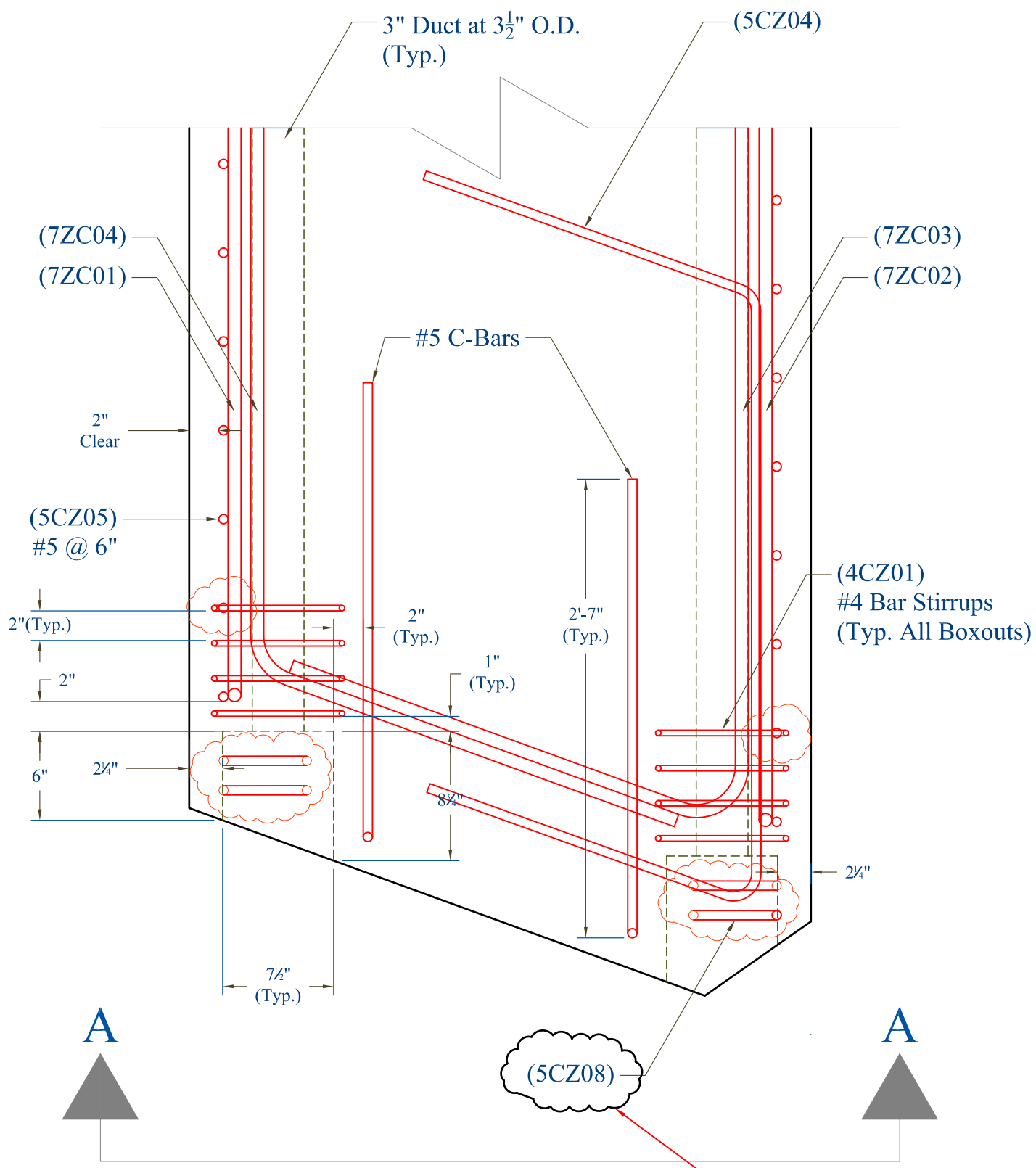

Plan View

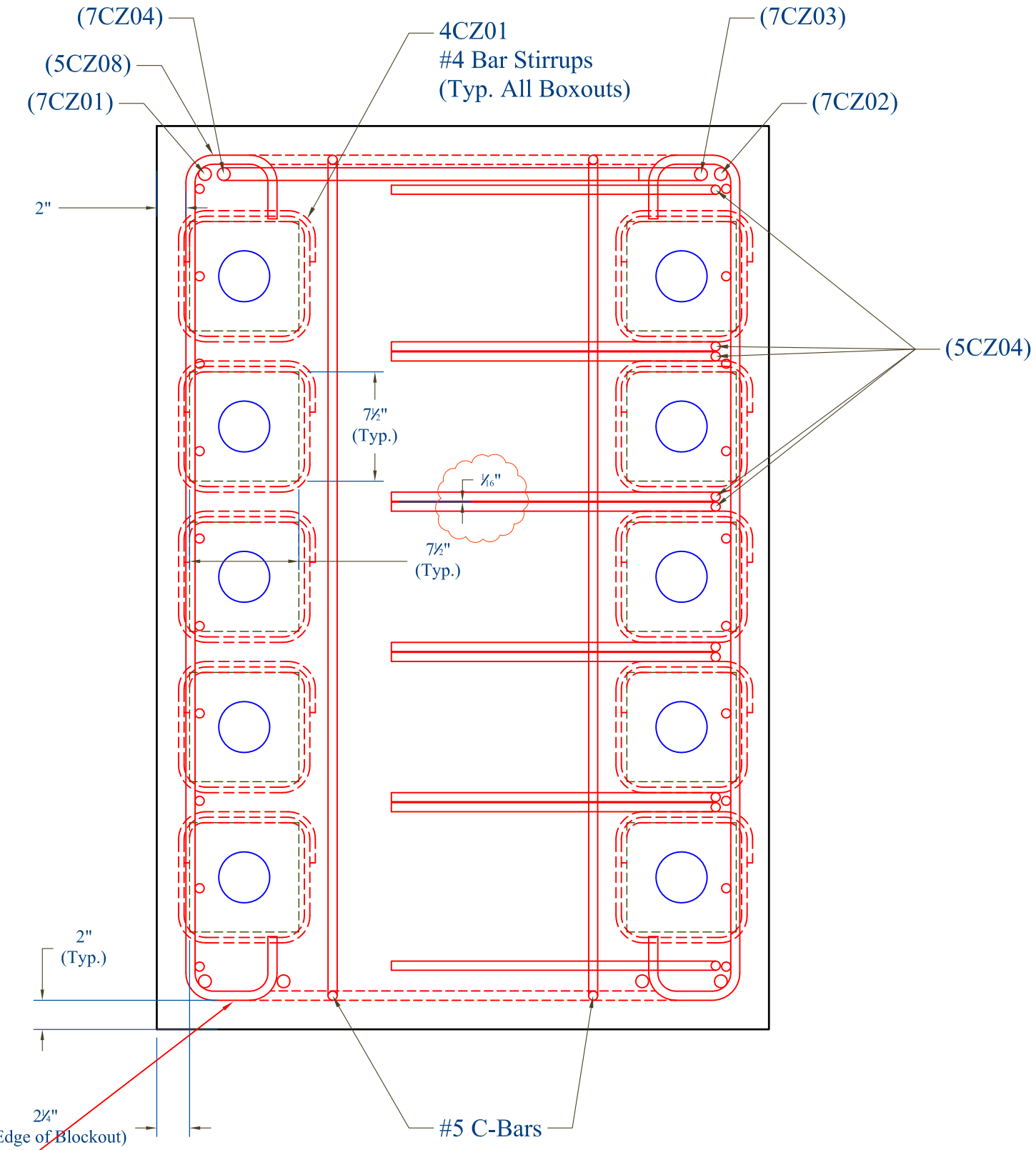

Elevation View A-A

Request to Eliminate

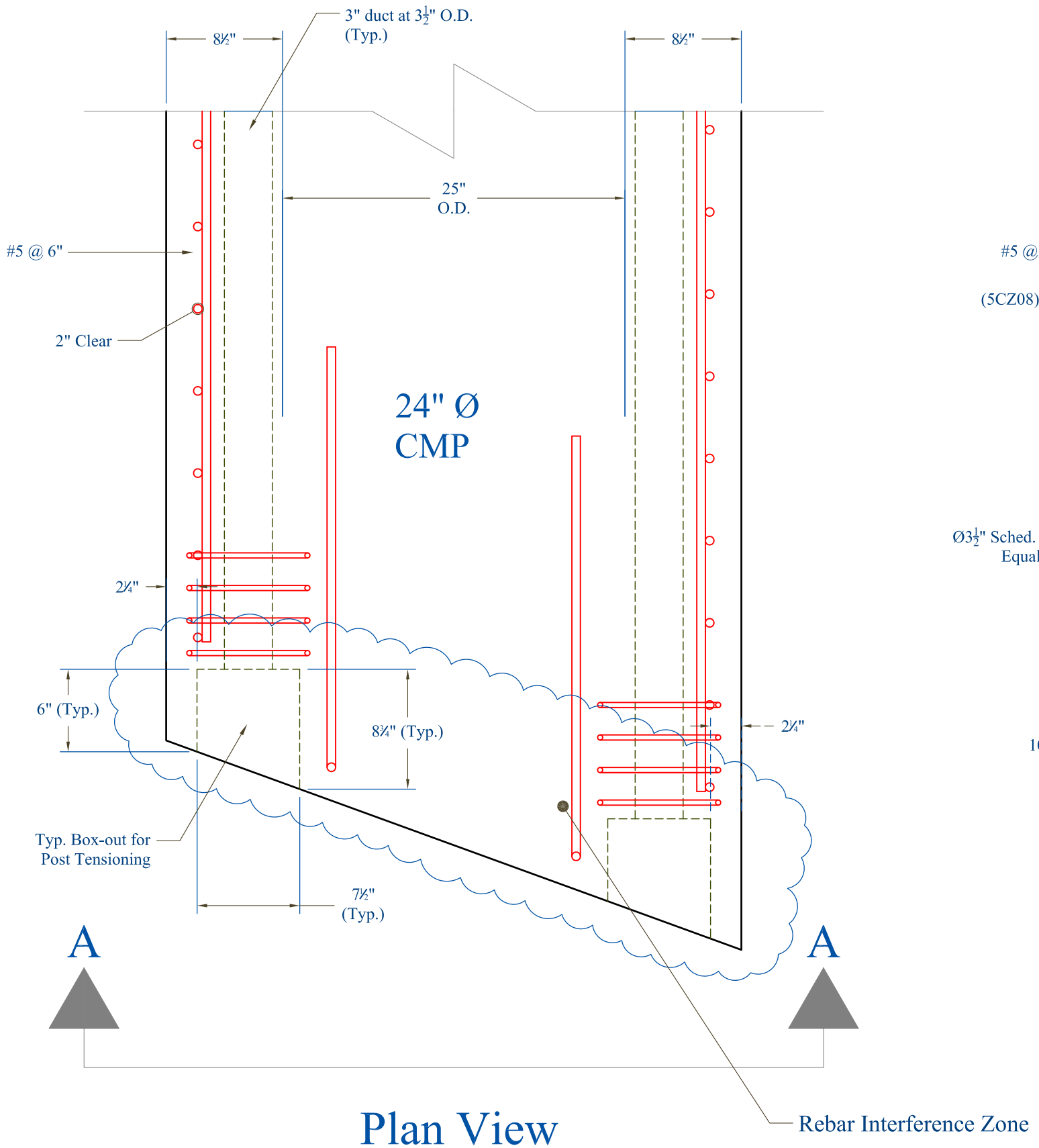

Plan View

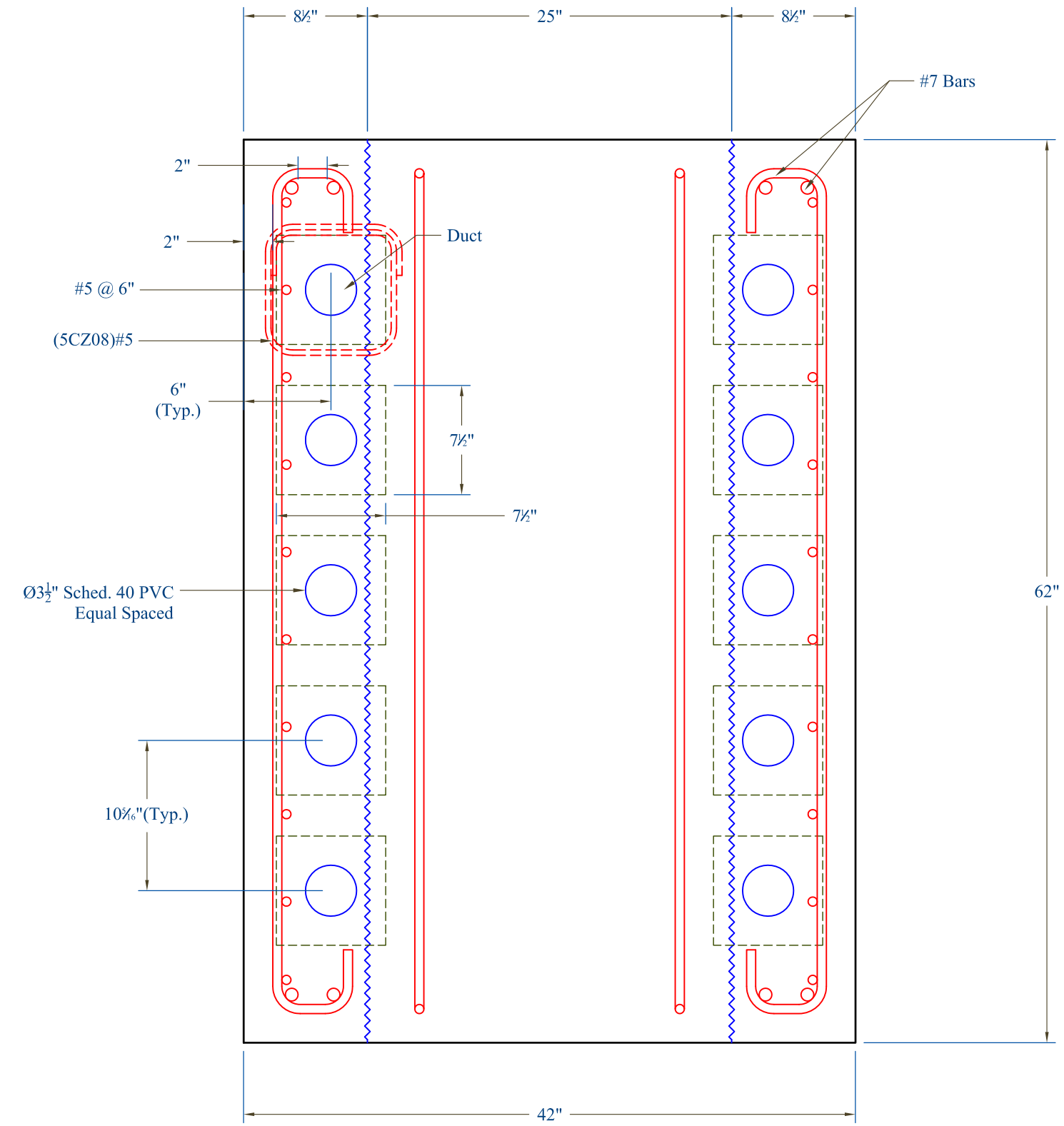

Elevation View A-A