S.D. Ireland Companies
Precast Division

193 Industrial Ave. Williston, VT 05495
P.O. Box 2286 South Burlington, VT 05407
p: 802-863-6222 f: 802-860-1528
www.sdireland.com

Attention:	Ted Luck	Date:	3/12/2014
Company:	Luck Brothers	Job Name:	Warren BRF 013-4(32)
Address:		Job Number:	SDI #14046
City, St, Zip:		Regarding:	Abutments submittal
Ph: / Fax:			

WE ARE SENDING:

- [ ] Quote
- [ ] Details
- [ ] Other: _____
- [x]
- [ ] Prints
- [ ] Plans
- [ ] Specifications
- [ ] Copy Of Letter
- [ ] Change Order
- [ ] Samples
- [ ] Revised Submittals

Copies	Date	Pages	Description
1	3/12/2014	1	Transmittal Cover
1	3/12/2014	7	Fabrication drawings
1	3/12/2014	2	Reinforcing drawings
1	3/12/2014	7	Abutment Lifting / Handling drawings/details (calculations to follow shortly)
1	3/12/2014	1	Mix Design

These Are Submitted as Checked Below:

- [x] For Approval
- [ ] Approved as Submitted
- [ ] Resubmit __ Copies for Approval
- [ ] For Your Use
- [ ] Approved as Noted
- [ ] Submit__ Copies for Distribution
- [ ] As Requested
- [ ] Returned for Corrections
- [ ] Return __ Corrected Prints
- [ ] For Review and Comment
- [ ] Prints Returned After Loan to Us
- [ ] For Bids Due: _____
- [ ] Other:

Notes/Remarks:

NOTE: Lifting and Handling calculations will follow this submittal shortly as a supplemental submittal

Thank you.

Matt@sdireland.com

Tim Dudley for Matt Wheeler 802-863-6222 ext 253

tdudley@sdireland.com

Copy To: _____

Signed:

If enclosures are not as noted, kindly notify us at once.

Precast Bridge Abutments

Warren BRF 013-4(32)

Abutment 1 :

Concrete:

Mix Designation: P60TER

1. Specified Mix Design	5000 PSI
2. Proposed Mix Design	6000 PSI
3. Striping Strength	3000 PSI
4. Handling Strength	3000 PSI
5. Shipping Strength	5000 PSI
6. Install Strength	5000 PSI
7. Traffic Loading	5000 PSI

Fabrication Tolerances:

1. Width ±1/4"
2. Height ±1/4"
3. Length ±1/2"
4. Rebar Cover 2" Min. (Unless Noted Otherwise)
5. Rebar Spacing ±1"
6. Rebar Clearance ±1/4"
7. Insert Placement ±1/4"

Post Tensioning: (Abutment 1 & 2)

- One (1) set of stressing equipment capable of stressing 0.6" monostrand as manufactured by DSI.
- PTI-certified field technician service to stress tendons to 3 kips and 44 kips each.

Reinforcing:

General Notes:

1. Reinforcing Steel - ASTM A615, Grade 60, Level II, Dual Coated
2. Materials and Manufacturing shall conform to ASTM C1433
3. Bar tied at every intersection.

Tolerances:

1. Spacing ±1"
2. Clearance ±1/4"

Lap Lengths:

1. Per AASHTO 5.11.2.1.1 & 5.11.5.3.1
   Lap Length for Level II (Dual Coated):
   #4 Bar=17"
   #5 Bar=26"
   #6 Bar=39"
   #7 Bar=53"
   #8 Bar=69"

Post Tension Materials for (20) 2-0.6 Tendons @ 43.6ft ea: (Abutment 1 & 2)

1. 1,920 ft .6 Monstr 50 mil USA Monoft .6E, 40 pcs @ 48 ft ea, 50 MIL
2. 40 pieces 4-0.6in. Cast Wedge Plate Uncoated
3. 80 pieces .6" 2-Part Wedge w/ Ring
4. 40 pieces 7"x7"x1" A36, Galv Ans Plate w/3.3" Ctr Hole
5. 960 feet ± 3" I.D. PVC Duct

Installation Sequence:

1. Pieces will be shipped 1 per truckload.

2. Unload pieces utilizing all pick points.

3. Grade base gravel at least ½" below the underside of the precast to allow for grout infill.

4. Place shims under abutment as required. Set shims to desired grade.

5. Place precast abutment pieces onto shims. Modify shims as necessary to achieve desired final grade.

6. Backfill edges of abutment unit up at least 6" to act as a dam for grout installation.

7. Install HPC Rapid Set evenly into the corrugated tubes. Observe that the HPC Rapid Set fills in all areas under the abutment pieces.

8. Install HPC Rapid Set in shear key.

9. After HPC Rapid Set has acquired proper strength, post tension abutment pieces together.

10. Refer to VTrans plans and specs. for HPC strength and curing requirements and post tensioning details.

Abutment 2 :

Concrete:

Mix Designation: P60TER

1. Specified Mix Design 5000 PSI
2. Proposed Mix Design 6000 PSI
3. Striping Strength 3000 PSI
4. Handling Strength 3000 PSI
5. Shipping Strength 5000 PSI
6. Install Strength 5000 PSI
7. Traffic Loading 5000 PSI

Fabrication Tolerances:

1. Width ±1/4"
2. Height ±1/4"
3. Length ±1/2"
4. Rebar Cover 2" Min. (Unless Noted Otherwise)
5. Rebar Spacing ±1"
6. Rebar Clearance ±1/4"
7. Insert Placement ±1/4"

Post Tensioning: (Abutment 1 & 2)

- One (1) set of stressing equipment capable of stressing 0.6" monostrand as manufactured by DSI.
- PTI-certified field technician service to stress tendons to 3 kips and 44 kips each.

Reinforcing:

General Notes:

1. Reinforcing Steel - ASTM A615, Grade 60, Level II, Dual Coated
2. Materials and Manufacturing shall conform to ASTM C1433
3. Bar tied at every intersection.

Tolerances:

1. Spacing ±1"
2. Clearance ±1/4"

Lap Lengths:

1. Per AASHTO 5.11.2.1.1 & 5.11.5.3.1
   Lap Length for Level II (Dual Coated):
   #4 Bar=17"
   #5 Bar=26"
   #6 Bar=39"
   #7 Bar=53"
   #8 Bar=69"

Post Tension Materials for (20) 2-0.6 Tendons @ 43.6ft ea: (Abutment 1 & 2)

1. 1,920 ft .6 Monstr 50 mil USA Monoft .6E, 40 pcs @ 48 ft ea, 50 MIL
2. 40 pieces 4-0.6in. Cast Wedge Plate Uncoated
3. 80 pieces .6" 2-Part Wedge w/ Ring
4. 40 pieces 7"x7"x1" A36, Galv Ans Plate w/3.3" Ctr Hole
5. 960 feet ± 3" I.D. PVC Duct

Installation Sequence:

1. Pieces will be shipped 1 per truckload.

2. Unload pieces utilizing all pick points.

3. Grade base gravel at least $\frac{1}{2}$" below the underside of the precast to allow for grout infill.

4. Place shims under abutment as required. Set shims to desired grade.

5. Place precast abutment pieces onto shims. Modify shims as necessary to achieve desired final grade.

6. Backfill edges of abutment unit up at least 6" to act as a dam for grout installation.

7. Install HPC Rapid Set evenly into the corrugated tubes. Observe that the HPC Rapid Set fills in all areas under the abutment pieces.

8. Install HPC Rapid Set in shear key.

9. After HPC Rapid Set has acquired proper strength, post tension abutment pieces together.

10. Refer to VTrans plans and specs. for HPC strength and curing requirements and post tensioning details.

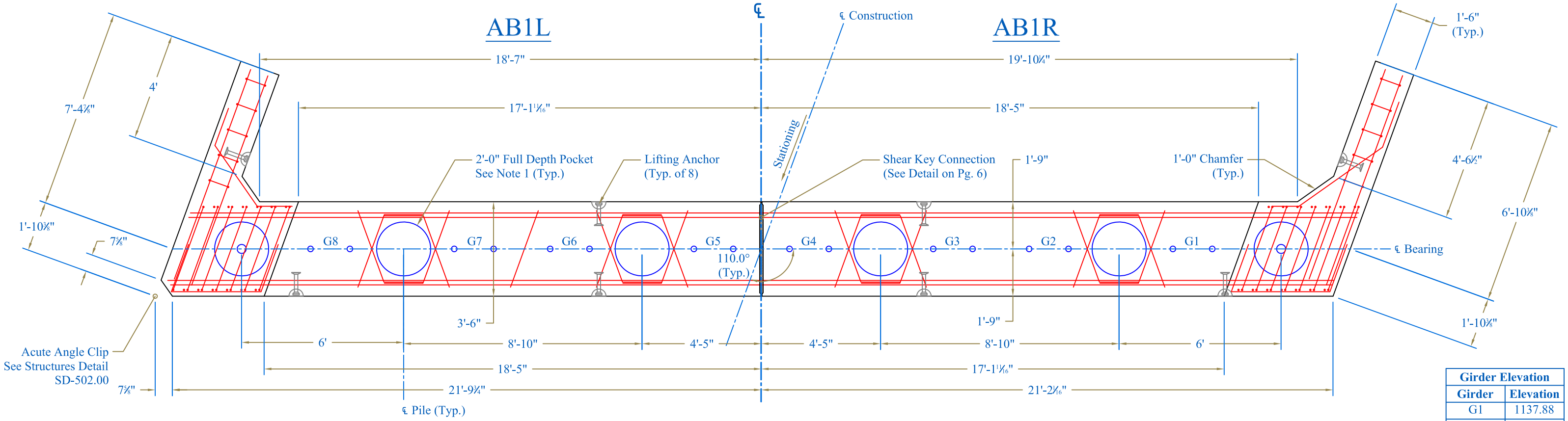

Plan View

Girder Elevation	
Girder	Elevation
G1	1137.88
G2	1137.98
G3	1138.04
G4	1138.13
G5	1138.13
G6	1138.03
G7	1137.97
G8	1137.87

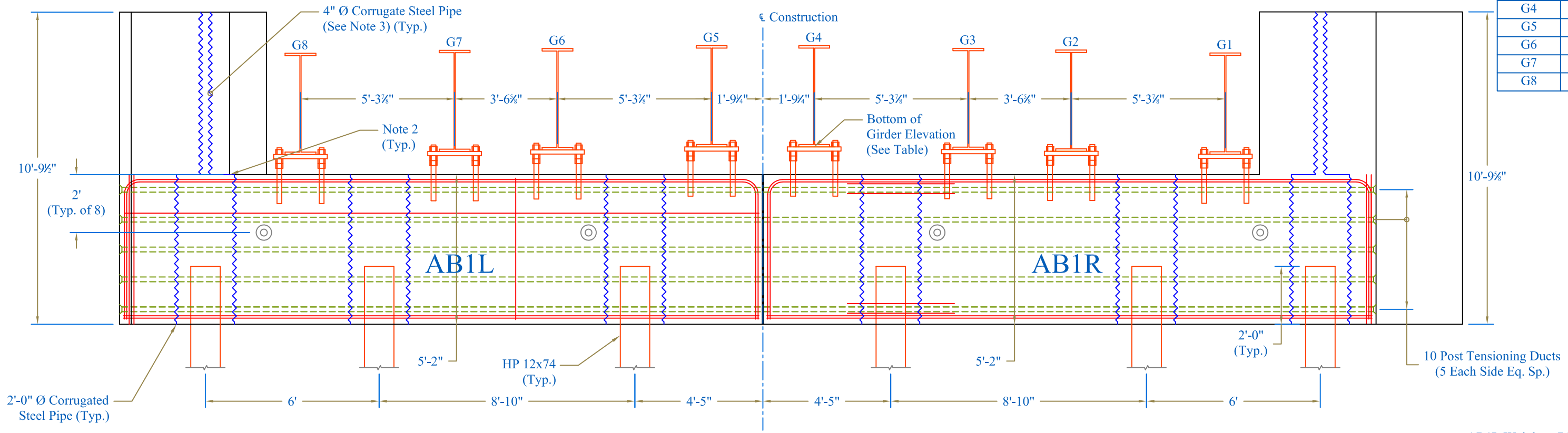

Elevation View

AB1L Weight = 76,790 lbs
AB1R Weight = 77,140 lbs

CONTRACTORS VTSPE:

NOTES:
1. Use 24" Galvanized Corrugated Steel Pipe for Pile Pockets Conforming to Subsection 711.01.
2. Form Top 6" with Removable Form to Eliminate Exposed Corrugated Steel on the Top of The Abutment
3. 4" Galvanized Corrugated Steel Pipe to Conform to Subsection 711.01.

PRECAST CONCRETE ABUTMENT SHOP DRAWINGS (SDI JOB #14046)

SUPERVISOR: M. WHEELER
DETAILER: I. ADAMS
CHECKER: E. Barendse
ENGINEER: N/A

PROJECT NAME: Warren
PROJECT #: BRF 013-4(32)
LOCATION: Bridge #166
Route 100, Warren, VT

Luck Brothers, Inc
73 Trade Road
Plattsburg, NY, 12901
Ph: (518)-561-4321

FABRICATOR:
193 INDUSTRIAL AVE.
WILLISTON, VT 05495
Ph: (802) 658-0201

SD Ireland PRECAST

02/07/2014

Abutment 1

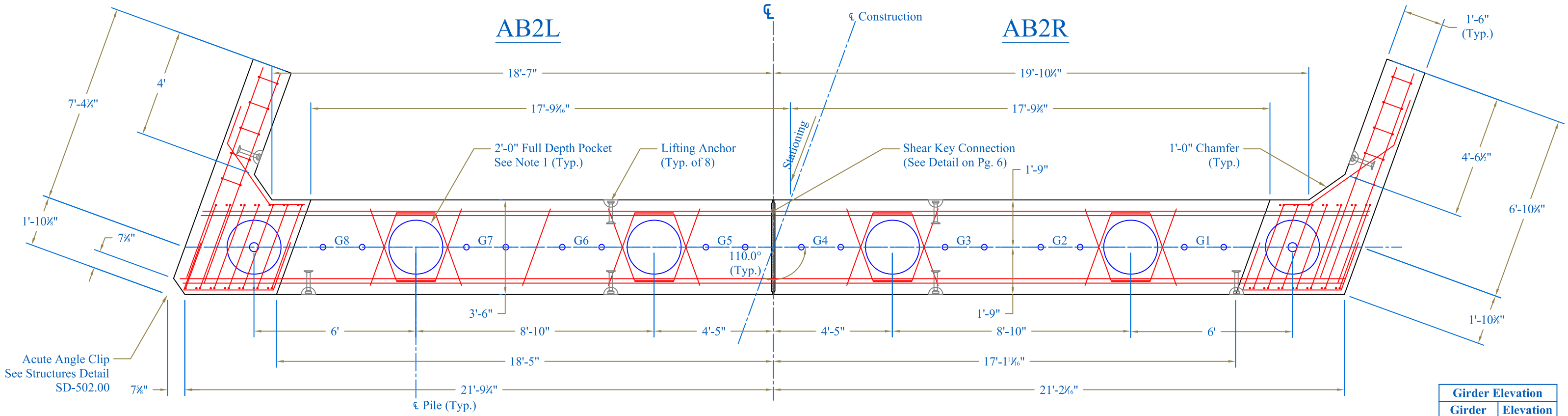

Plan View

Girder Elevation	
Girder	Elevation
G1	1137.85
G2	1137.95
G3	1138.01
G4	1138.11
G5	1138.11
G6	1138.0
G7	1137.94
G8	1137.84

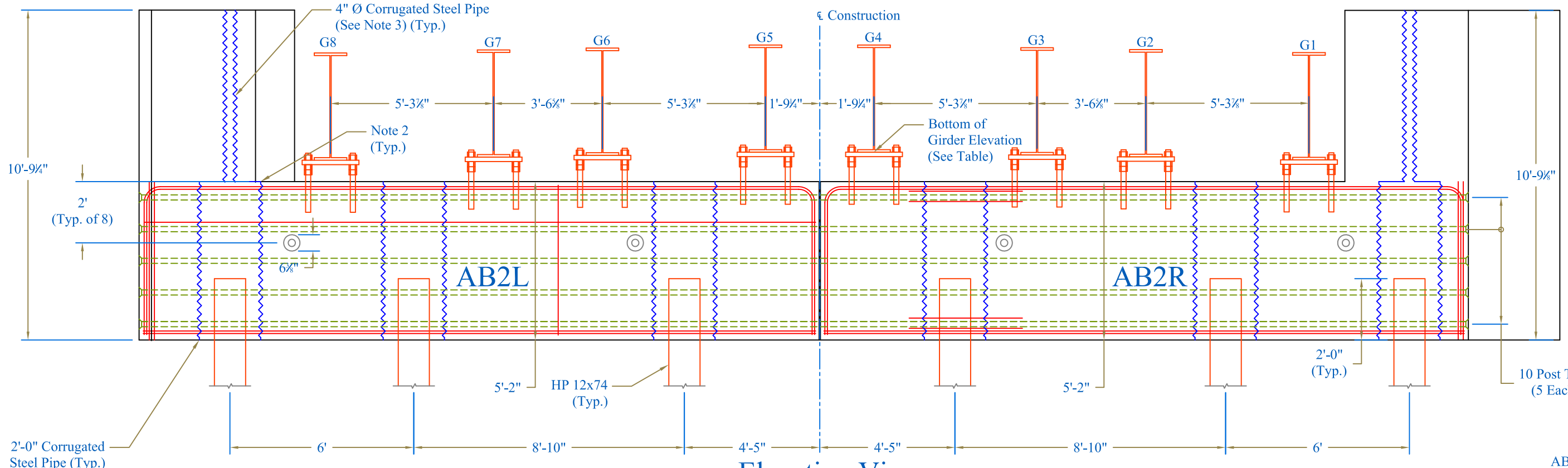

Elevation View

AB1L Weight = 76,790 lbs
AB1R Weight = 77,140 lbs

CONTRACTORS VTSPE:

NOTES:
1. Use 24" Galvanized Corrugated Steel Pipe for Pile Pockets Conforming to Subsection 711.01.
2. Form Top 6" with Removable Form to Eliminate Exposed Corrugated Steel on the Top of The Abutment
3. 4" Galvanized Corrugated Steel Pipe to Conform to Subsection 711.01.

PRECAST CONCRETE ABUTMENT SHOP DRAWINGS (SDI JOB #14046)

SUPERVISOR: M. WHEELER
DETAILER: I. ADAMS
CHECKER: E. Barendse
ENGINEER: N/A

PROJECT NAME: Warren
PROJECT #: BRF 013-4(32)
LOCATION: Bridge #166
Route 100, Warren, VT

Luck Brothers, Inc
73 Trade Road
Plattsburg, NY, 12901
Ph: (518)-561-4321

FABRICATOR:
193 INDUSTRIAL AVE.
WILLISTON, VT 05495
Ph: (802) 658-0201

SD Ireland PRECAST

02/07/2014

Abutment 2

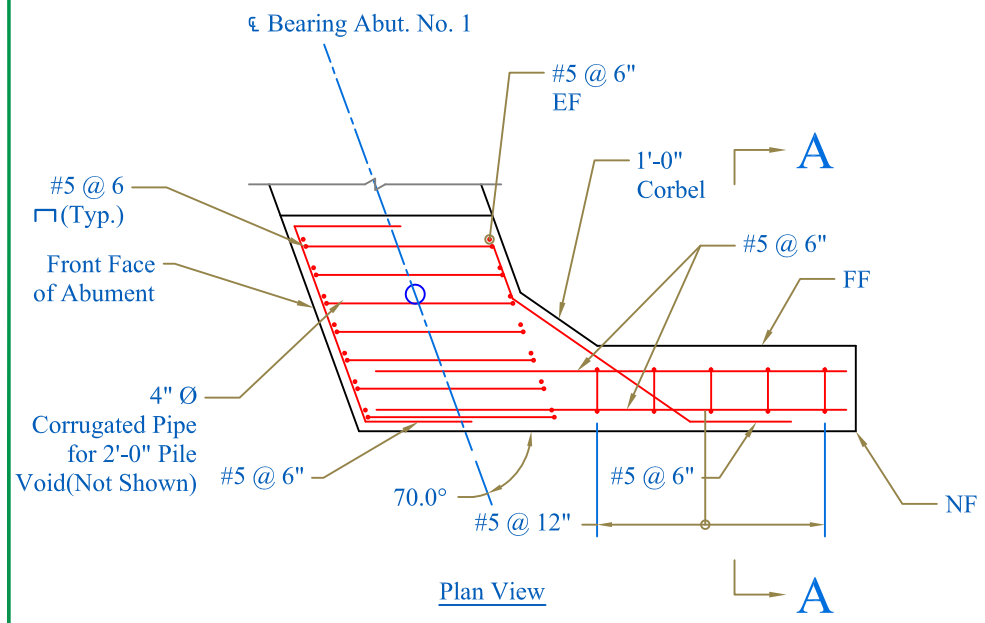

Plan View

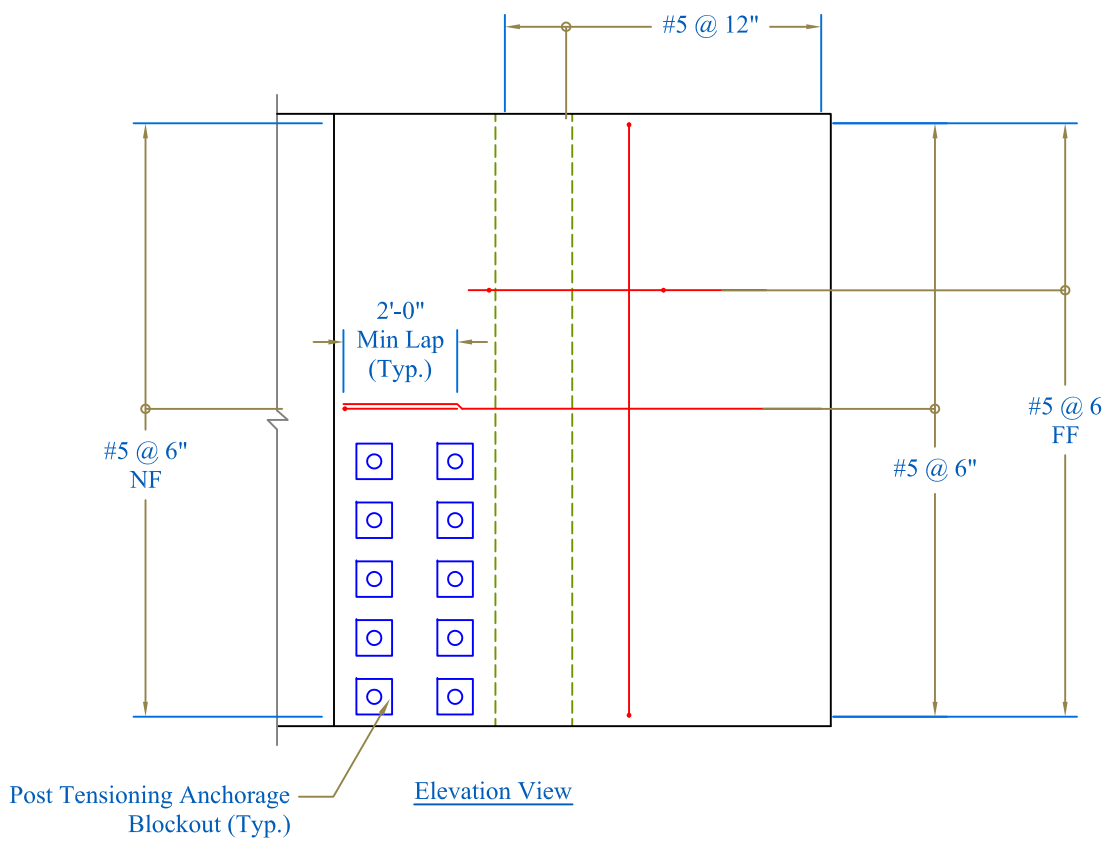

Elevation View

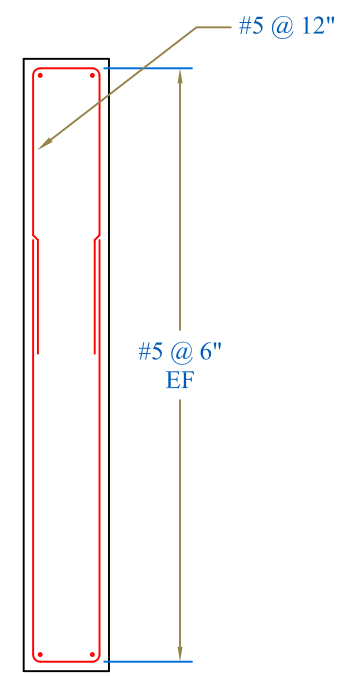

Section A-A

Wing Wall Detail

Wing Wall 1 Shown

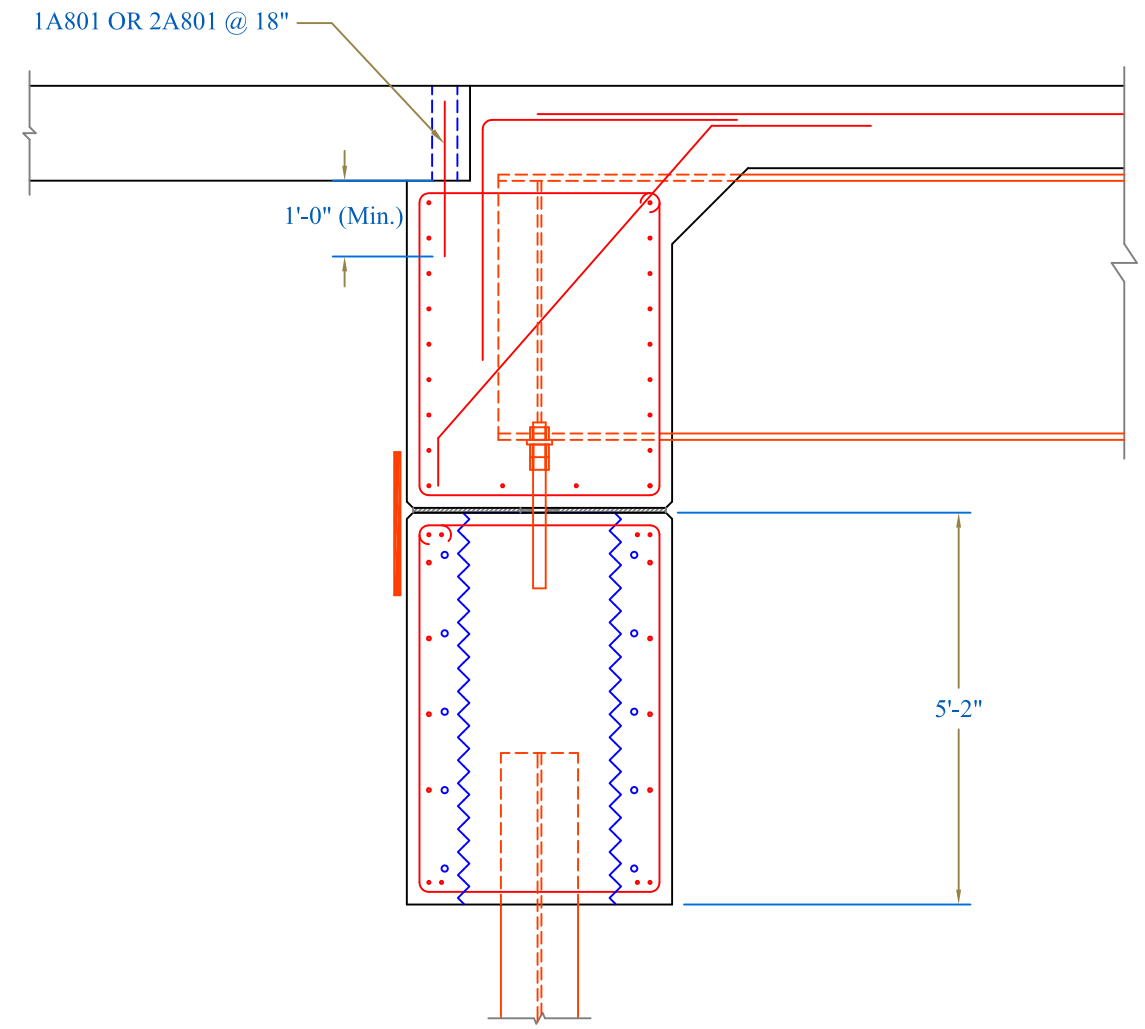

Approach Slab to Abutment Detail

CONTRACTORS VTSPE:	PRECAST CONCRETE ABUTMENT SHOP DRAWINGS (SDI JOB #14046)	Luck Brothers, Inc 73 Trade Road Plattsburg, NY, 12901 Ph: (518)-561-4321	FABRICATOR: 193 INDUSTRIAL AVE. WILLISTON, VT 05495 Ph: (802) 658-0201	SD Ireland PRECAST
	SUPERVISOR: M. WHEELER DETAILER: I. ADAMS CHECKER: E. Barendse ENGINEER: N/A	PROJECT NAME: Warren PROJECT #: BRF 013-4(32) LOCATION: Bridge #166 Route 100, Warren, VT	02/07/2014	Abutment 2	5 of 7

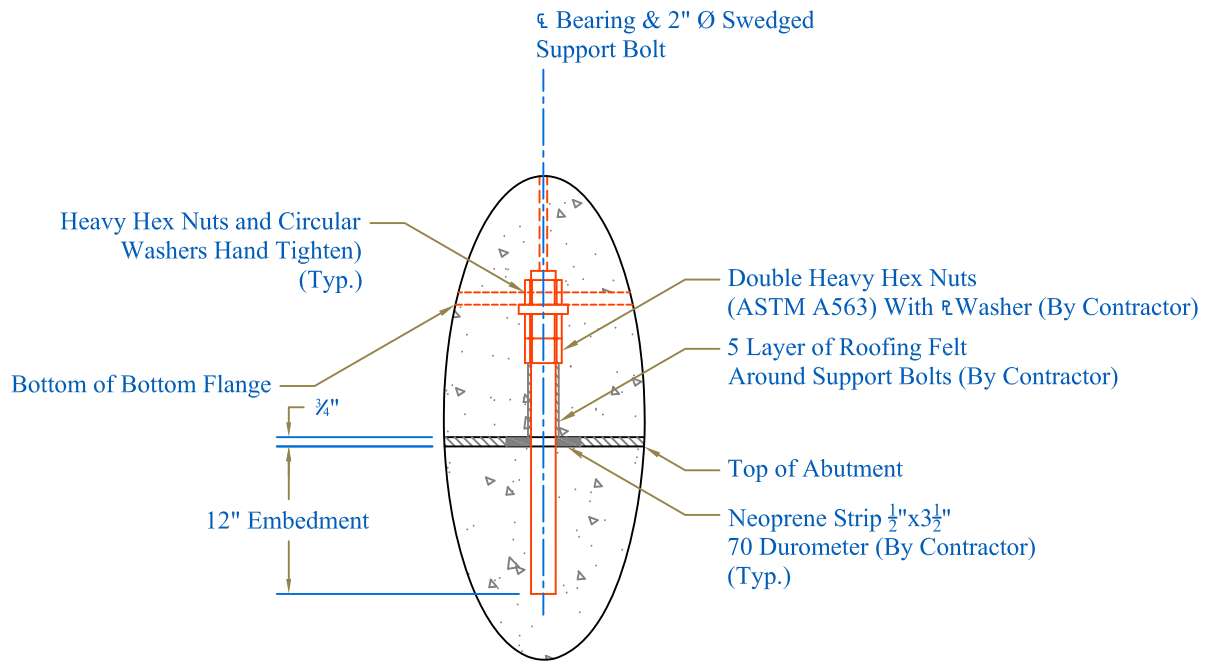

Support Bolt Detail

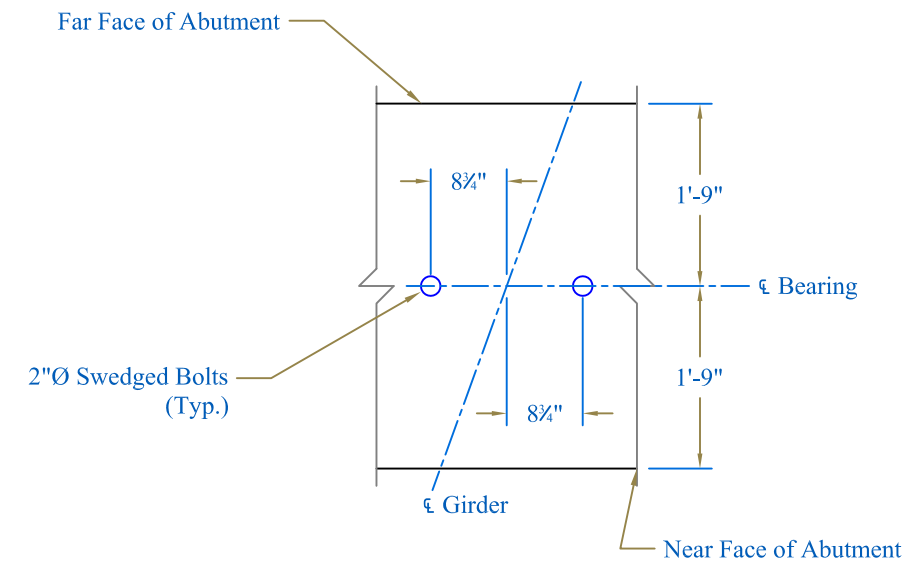

Support Bolt Layout

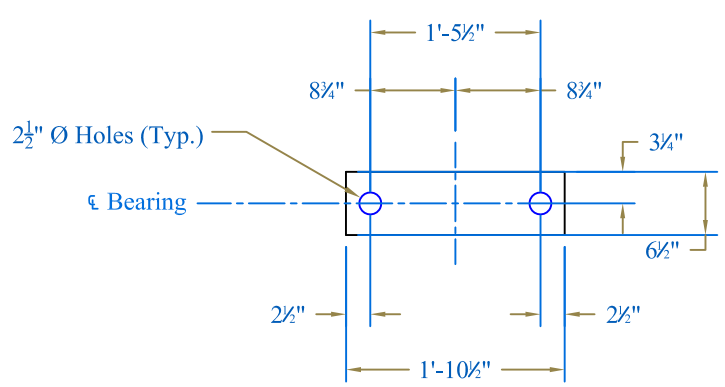

Leveling Plate

PT Duct Section Detail

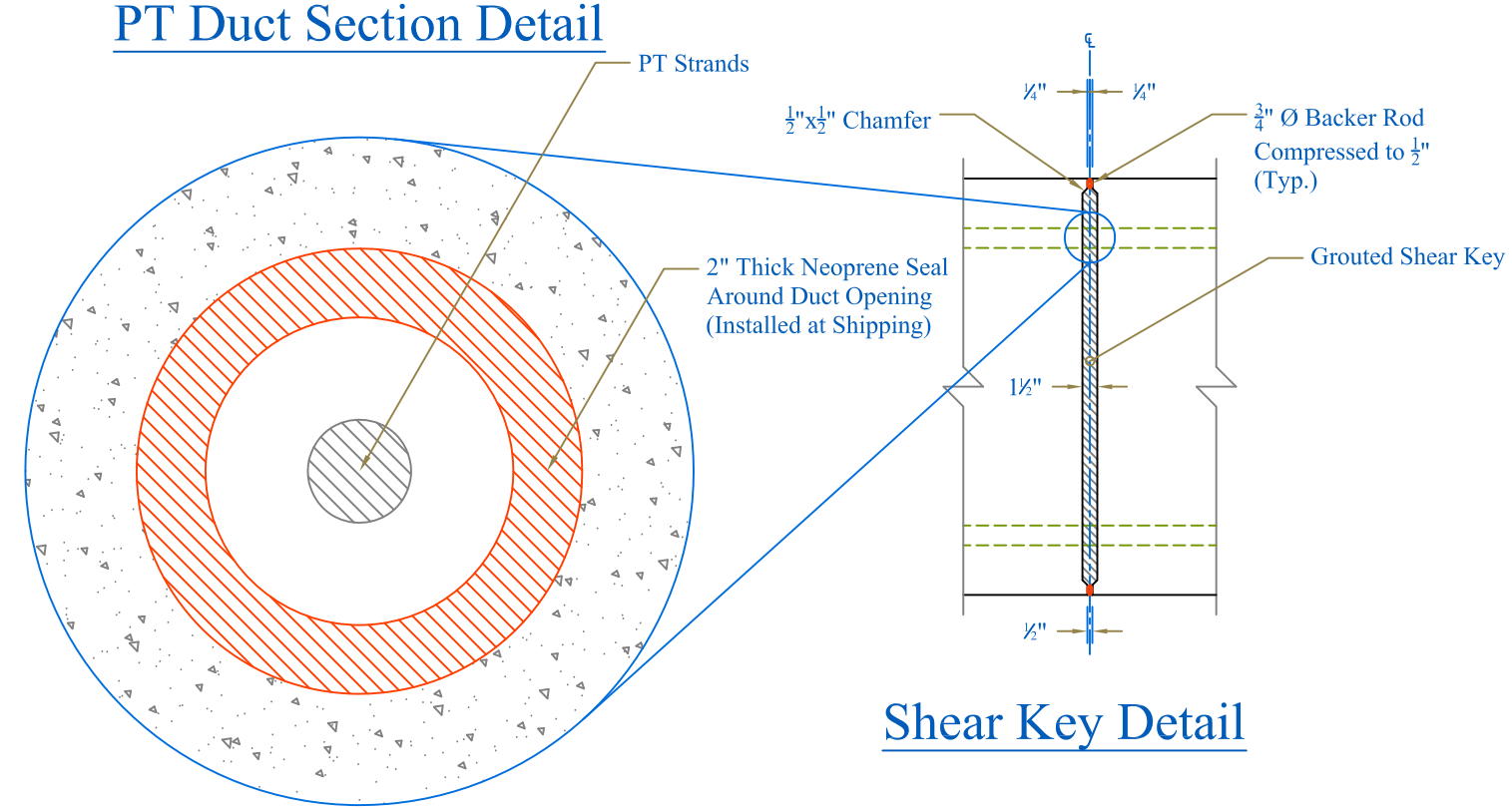

Shear Key Detail

CONTRACTORS VTSPE:	PRECAST CONCRETE ABUTMENT SHOP DRAWINGS (SDI JOB #14046)		Luck Brothers, Inc 73 Trade Road Plattsburg, NY, 12901 Ph: (518)-561-4321	FABRICATOR: 193 INDUSTRIAL AVE. WILLISTON, VT 05495 Ph: (802) 658-0201 SD Ireland PRECAST	
	SUPERVISOR: M. WHEELER DETAILER: I. ADAMS CHECKER: E. Barendse ENGINEER: N/A	PROJECT NAME: Warren PROJECT #: BRF 013-4(32) LOCATION: Bridge #166 Route 100, Warren, VT	02/07/2014	Connection Details	6 of 7

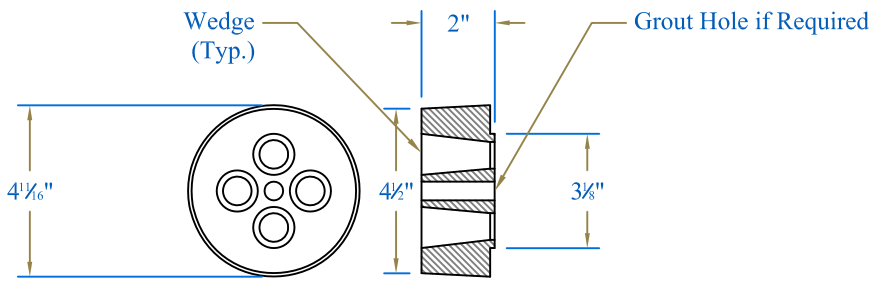

Typical 4-0.6" Cast Wedge Plate

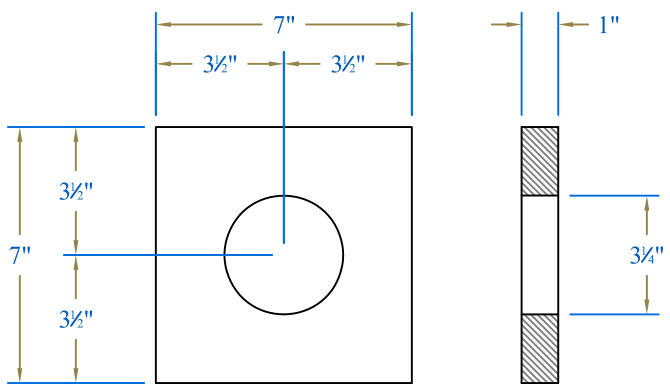

Bearing Plate

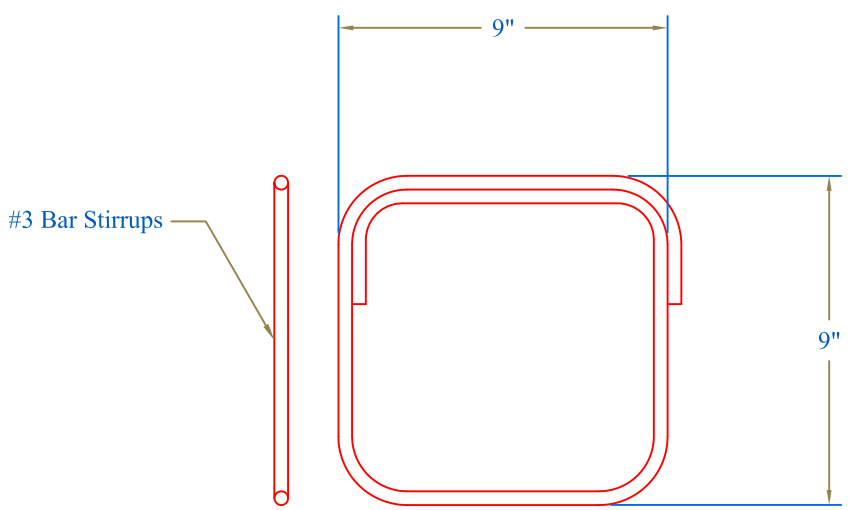

Reinforcement Detail

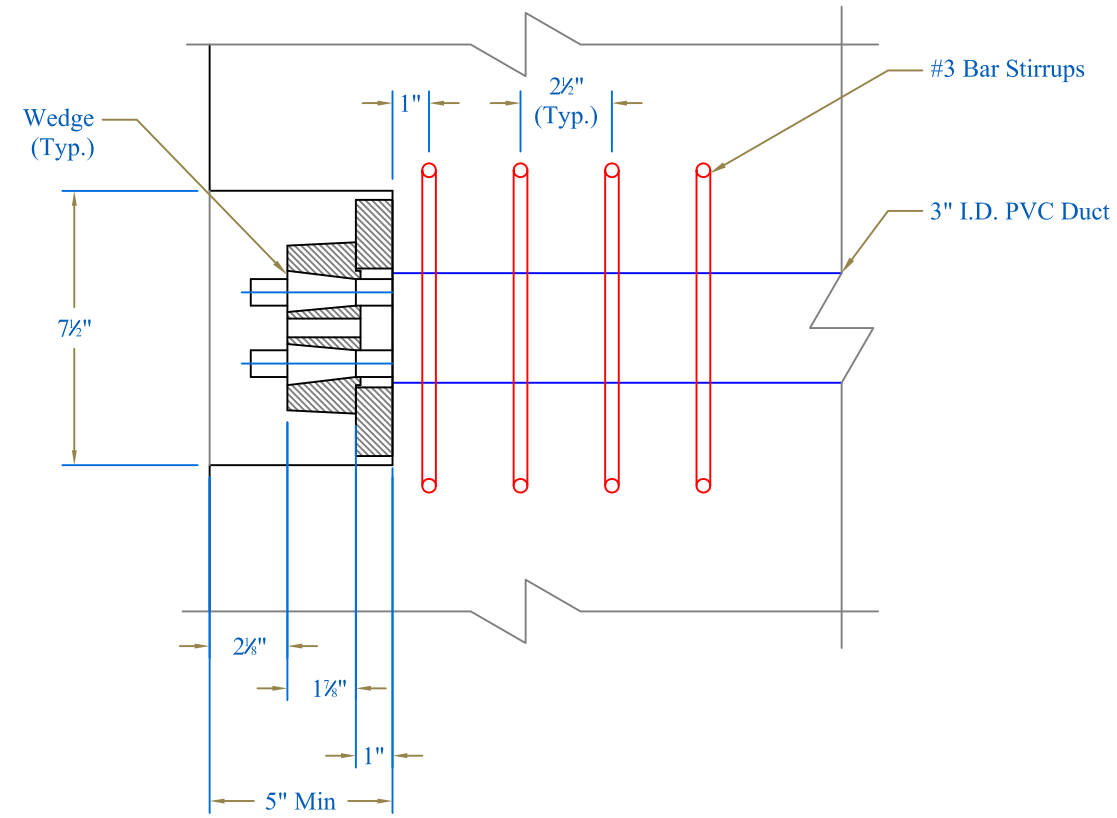

Bearing Plate Section

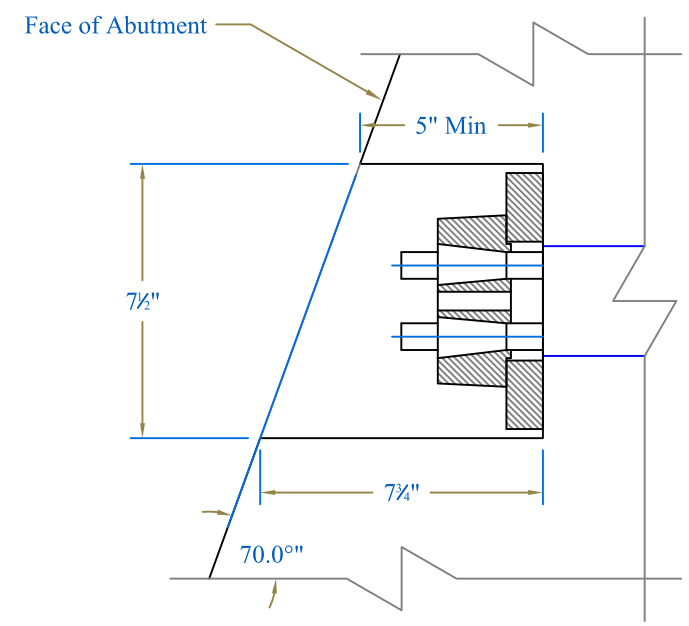

Bearing Plate Plan

CONTRACTORS VTSPE:	PRECAST CONCRETE ABUTMENT SHOP DRAWINGS (SDI JOB #14046)	Luck Brothers, Inc 73 Trade Road Plattsburg, NY, 12901 Ph: (518)-561-4321	FABRICATOR: 193 INDUSTRIAL AVE. WILLISTON, VT 05495 Ph: (802) 658-0201	SD Ireland PRECAST
	SUPERVISOR: M. WHEELER DETAILER: I. ADAMS CHECKER: E. Barendse ENGINEER: N/A	PROJECT NAME: Warren PROJECT #: BRF 013-4(32) LOCATION: Bridge #166 Route 100, Warren, VT	02/07/2014	Post Tensioning Details
				7 of 7

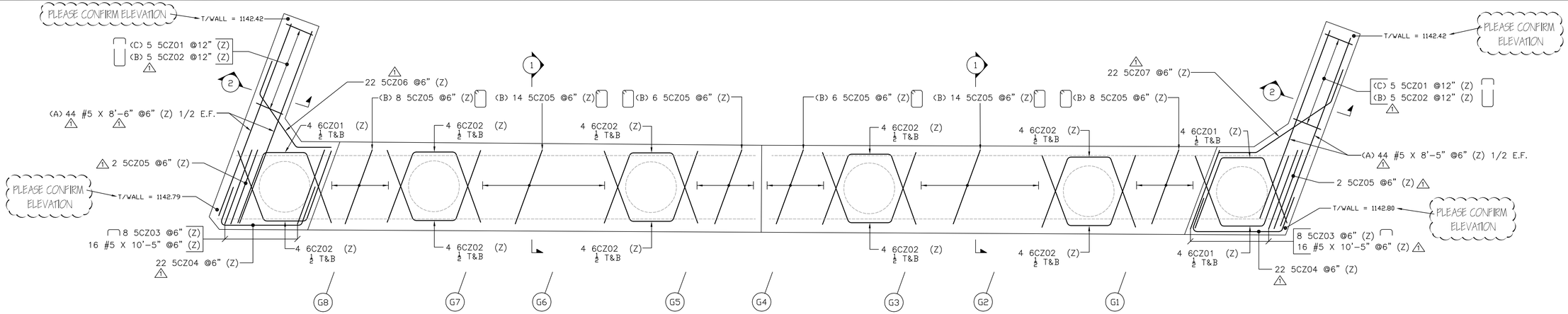

ABUTMENT #1 PLAN

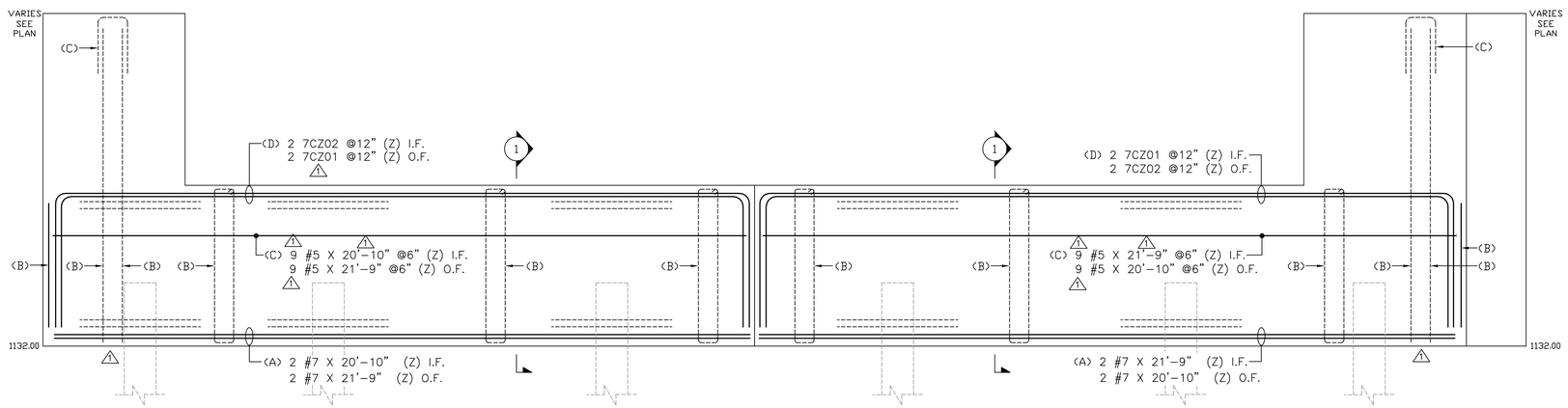

ABUTMENT #1 ELEVATION

ALL DUAL COATED REINF. DENOTED (Z)

LEGEND:
CONT.-CONTINUOUS
TRANS.-TRANSVERSE
DWLS.-DOWELS
VERTS.-VERTICAL
HORIZ.-HORIZONTAL
T&B -TOP & BOTTOM
I.F.-INNER FACE
O.F.-OUTER FACE
E.E.-EACH END
E.F.-EACH FACE
F.F.-FRONT FACE
R.F.-REAR FACE
E.W.-EACH WAY
O.C.-ON CENTER
L.W.-LONG WAY
S.W.-SHORT WAY

FOR APPROVAL

ELEVATIONS & DIMENSIONS SHOWN ON THIS DWG. ARE FOR REINF. DETAILING PURPOSES ONLY AND ARE NOT INTENDED FOR CONSTRUCTION.

REINF. BARS ASTM A615 GRADE 60 DUAL COATED

VERIFICATION OF UNCLEAR INFORMATION MAY BE REQUESTED ON THIS DRAWING. SHOULD VERIFICATION BE LEFT UN-ADDRESSED IT WILL REMAIN AS SHOWN AND ASSUME TO BE CORRECT.

Drawing Sheet : C — BAR LIST

Bar Mark	Qty	Size	Total Length	Type	'A'	'B'	'C'	'D'	'E'	'F'	'G'	'H'	'J'	'K'	'O'	'R'
5CZ01	10	#5	6'-4"	17		2'-7"	1'-2"	2'-7"								
5CZ02	10	#5	21'-2"	17		10'-0"	1'-2"	10'-0"								
7CZ01	4	#7	31'-5"	17		4'-10"	21'-9"	4'-10"								
5CZ03	16	#5	5'-0 ½"	17		0'-10"	3'-4 ½"	0'-10"								
5CZ04	44	#5	7'-6"	S13		2'-0"	3'-6"	2'-0"				3'-3 ½"		1'-2 ¼"	1'-2 3/8"	
5CZ05	60	#5	17'-4"	T1	0'-5 ½"	3'-4 ½"	4'-10"	3'-4 ½"	4'-10"		0'-5 ½"					
7CZ02	4	#7	30'-6"	17		4'-10"	20'-10"	4'-10"								
6CZ01	12	#6	7'-8"	3			3'-0"	1'-8"	3'-0"			2'-9 ¾"		1'-0 ¼"	3'-10"	
6CZ02	36	#6	7'-8"	3			3'-0"	1'-8"	3'-0"			2'-9 ¾"		1'-0 ¼"	3'-9 ¾"	
5CZ06	22	#5	6'-0"	22D			2'-0"	2'-9"	1'-3"			1'-8"	1'-1 ¼"	1'-0 ¼"		0'-8 ¾"
5CZ07	22	#5	7'-0"	22D			2'-0"	3'-7"	1'-5"			1'-2"	1'-7 ½"	0'-9 ½"		1'-2"

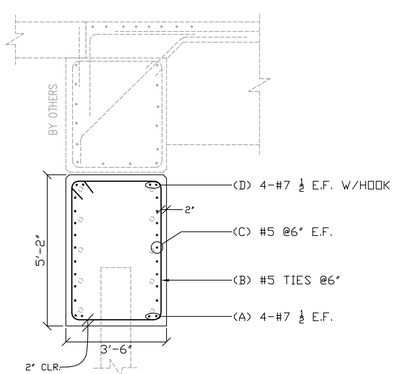

SECT. 1

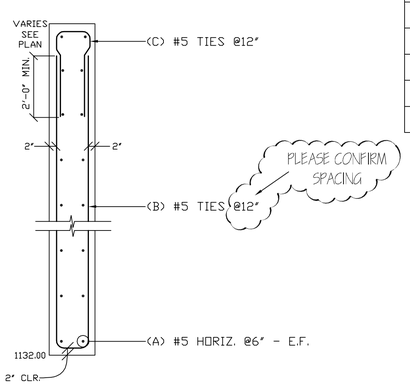

SECT. 2

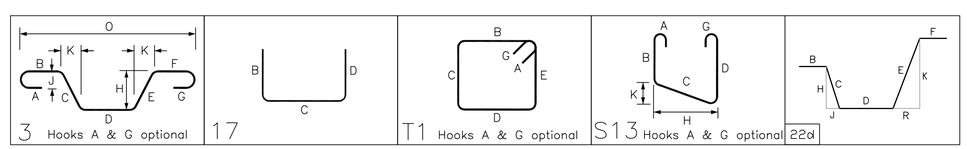

6			
5			
4			
3			
2	2-24-14	1	DFI INTERNAL REVIEW/FOR APPROVAL
1	2-18-14		FOR APPROVAL
	DATE	REV.#	SENT FOR

DIMENSION
DIMENSION FABRICATORS INC.
2000 7TH STREET
SCOTIA, N.Y. 12302
PH: (518) 374-1936
FAX (518) 374-4830
www.dimensionfabricators.com

STRUCTURE	VTAOT WARREN BRF 031-4(32) PRECAST
LOCATION	BRIDGE 166 ROUTE 100 (MINOR ARTERIAL) BURLINGTON, VT
ARCHITECT	
ENGINEER	
CUSTOMER	S.D. IRELAND CONCRETE CONST. CORP.
DRAWN BY ED	DATE 2/18/14
DFI #	8756
DRAWING COVERS	ABUTMENT #1 DUAL COATED REINFORCING
DRAWING #	C

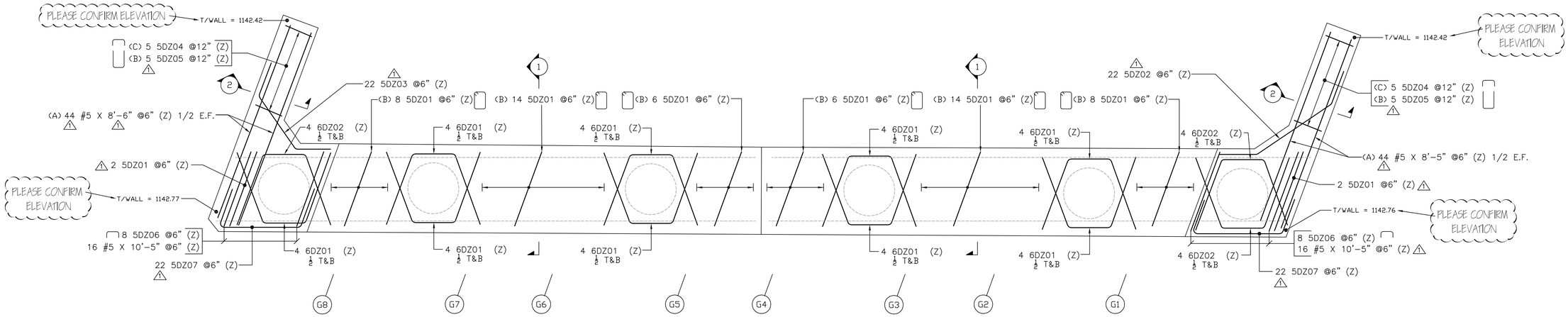

ABUTMENT #2 PLAN

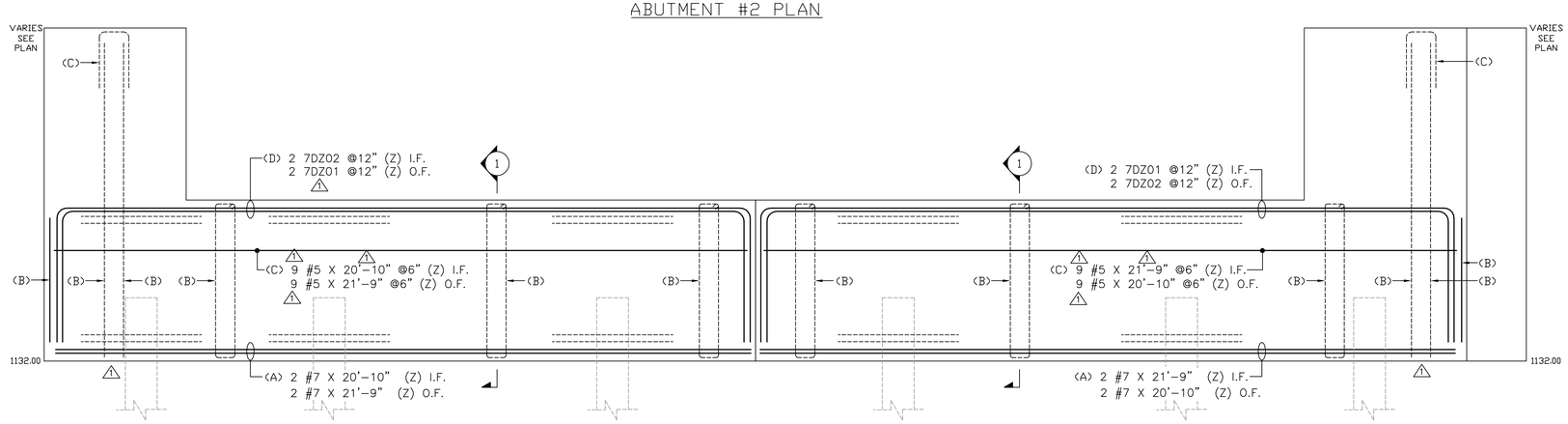

ABUTMENT #2 ELEVATION

ALL DUAL COATED REINF. DENOTED (Z)

LEGEND:
CONT.-CONTINUOUS
TRANS.-TRANSVERSE
DWLS.-DOWELS
VERTS.-VERTICAL
HORIZ.-HORIZONTAL
T&B -TOP & BOTTOM
I.F.-INNER FACE
O.F.-OUTER FACE
E.E.-EACH END
E.F.-EACH FACE
F.F.-FRONT FACE
R.F.-REAR FACE
E.W.-EACH WAY
O.C.-ON CENTER
L.W.-LONG WAY
S.W.-SHORT WAY

FOR APPROVAL

ELEVATIONS & DIMENSIONS SHOWN ON THIS DWG. ARE FOR REINF. DETAILING PURPOSES ONLY AND ARE NOT INTENDED FOR CONSTRUCTION.

REINF. BARS ASTM A615 GRADE 60 DUAL COATED

VERIFICATION OF UNCLEAR INFORMATION MAY BE REQUESTED ON THIS DRAWING. SHOULD VERIFICATION BE LEFT UN-ADDRESSED IT WILL REMAIN AS SHOWN AND ASSUME TO BE CORRECT.

Drawing Sheet : D

BAR LIST

Bar Mark	Qty	Size	Total Length	Type	'A'	'B'	'C'	'D'	'E'	'F'	'G'	'H'	'J'	'K'	'O'	'R'
5DZ01	60	#5	17'-4"	T1	0'-5 ½"	3'-4 ½"	4'-10"	3'-4 ½"	4'-10"		0'-5 ½"					
6DZ01	36	#6	7'-8"	3			3'-0"	1'-8"	3'-0"			2'-9 ¼"		1'-0 ¼"	3'-9 ¼"	
7DZ01	4	#7	31'-5"	17		4'-10"	21'-9"	4'-10"								
5DZ02	22	#5	7'-0"	22D			2'-0"	3'-7"	1'-5"			1'-2"	1'-7 ½"	0'-9 ½"		1'-2"
5DZ03	22	#5	6'-0"	22D			2'-0"	2'-9"	1'-3"			1'-8"	1'-1 ¼"	1'-0 ¼"		0'-8 ¾"
5DZ04	10	#5	6'-4"	17		2'-7"	1'-2"	2'-7"								
5DZ05	10	#5	21'-2"	17		10'-0"	1'-2"	10'-0"								
5DZ06	16	#5	5'-0 ½"	17		0'-10"	3'-4 ½"	0'-10"								
5DZ07	44	#5	7'-6"	S13		2'-0"	3'-6"	2'-0"				3'-3 ½"		1'-2 ¼"	1'-2 3/8"	
6DZ02	12	#6	7'-8"	3			3'-0"	1'-8"	3'-0"			2'-9 ¼"		1'-0 ¼"	3'-10"	
7DZ02	4	#7	30'-6"	17		4'-10"	20'-10"	4'-10"								

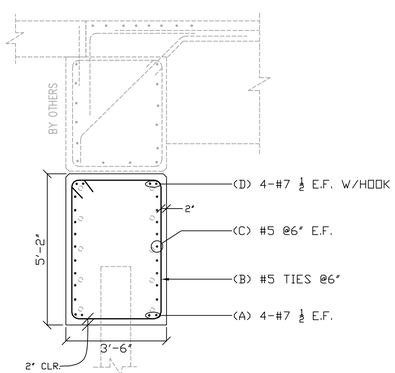

SECT. 1

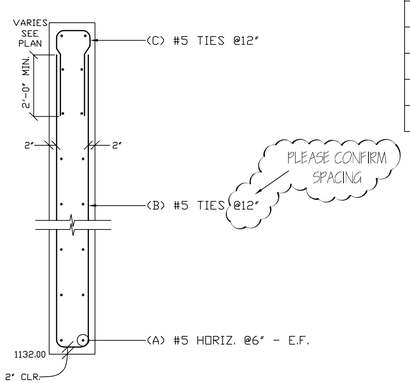

SECT. 2

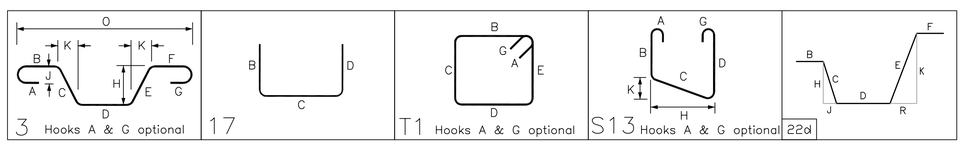

6			
5			
4			
3			
2	2-24-14	1	DFI INTERNAL REVIEW/FOR APPROVAL
1	2-18-14		FOR APPROVAL
	DATE	REV.#	SENT FOR

DIMENSION
DIMENSION FABRICATORS INC.
2000 7TH STREET
SCOTIA, N.Y. 12302
PH: (518) 374-1936
FAX (518) 374-4830
www.dimensionfabricators.com

STRUCTURE	VTAOT WARREN BRF 031-4(32) PRECAST
LOCATION	BRIDGE 166 ROUTE 100 (MINOR ARTERIAL) BURLINGTON, VT
ARCHITECT	
ENGINEER	
CUSTOMER	S.D. IRELAND CONCRETE CONST. CORP.
DRAWN BY ED	DATE 2/18/14
DFI #	8756
DRAWING COVERS	ABUTMENT #2 DUAL COATED REINFORCING
DRAWING #	D

EN600 = 53,000 Vertical
106,000 Basket

Lift Device = AL Patterson Part # LPA20T10G
Lift Pin Anchor
W/ LPLE20T Lift Eye

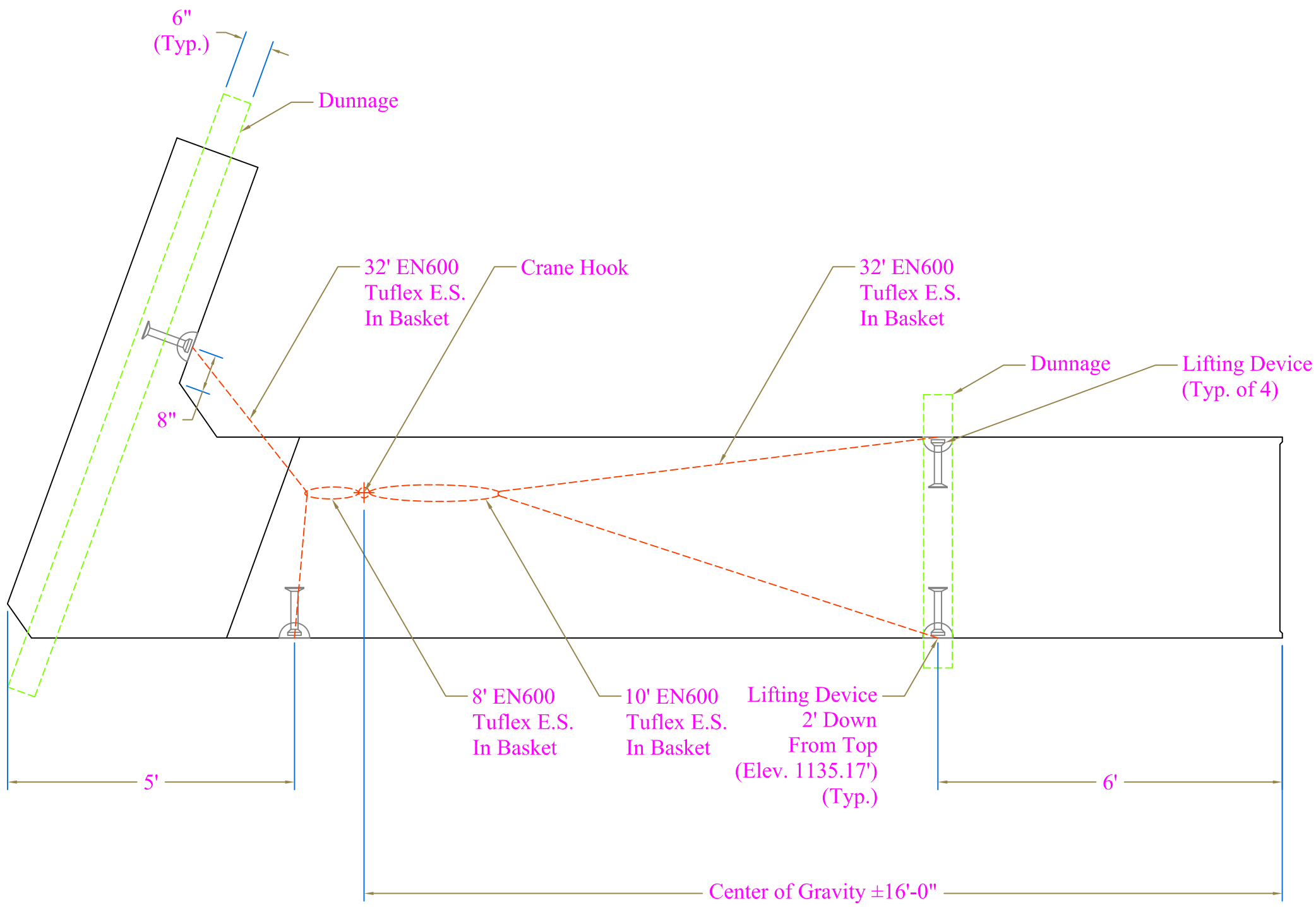

CONTRACTORS VTSPE:	PRECAST CONCRETE ABUTMENT SHOP DRAWINGS (SDI JOB #14046)		Luck Brothers, Inc 73 Trade Road Plattsburg, NY, 12901 Ph: (518)-561-4321	FABRICATOR: 193 INDUSTRIAL AVE. WILLISTON, VT 05495 Ph: (802) 658-0201
	SUPERVISOR: M. WHEELER DETAILER: I. ADAMS CHECKER: E. Barendse ENGINEER: N/A	PROJECT NAME: Warren PROJECT #: BRF 013-4(32) LOCATION: Bridge #166 Route 100, Warren, VT	03/03/2014	AB1L & AB2L Lifting

SD Ireland PRECAST

EN600 = 53,000 Vertical
106,000 Basket

Lift Device = AL Patterson Part # LPA20T10G
Lift Pin Anchor
W/ LPLE20T Lift Eye

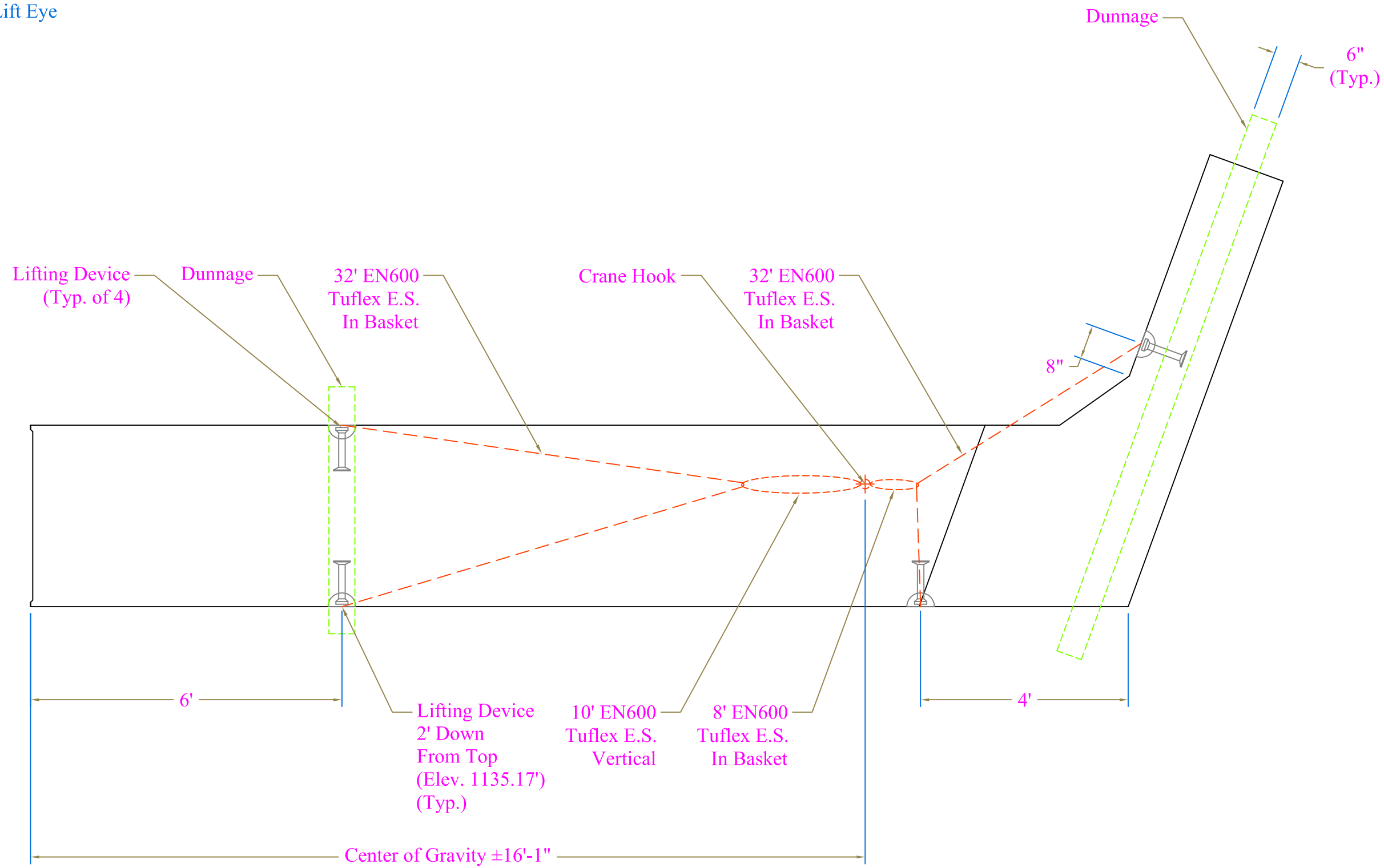

CONTRACTORS VTSPE:	PRECAST CONCRETE ABUTMENT SHOP DRAWINGS (SDI JOB #14046)	Luck Brothers, Inc 73 Trade Road Plattsburg, NY, 12901 Ph: (518)-561-4321	FABRICATOR: 193 INDUSTRIAL AVE. WILLISTON, VT 05495 Ph: (802) 658-0201	SD Ireland PRECAST
	SUPERVISOR: M. WHEELER DETAILER: I. ADAMS CHECKER: E. Barendse ENGINEER: N/A	PROJECT NAME: Warren PROJECT #: BRF 013-4(32) LOCATION: Bridge #166 Route 100, Warren, VT	03/03/2014	AB1R & AB2R Lifting — 2 of 2

ALP LIFTING PIN ANCHORS

All ALP lifting pins are manufactured using high strength steel with hot forged ends. The head design provides uniform engagement with the Lifting Eye, and the large forged anchor "foot" is embedded in the concrete to create the lifting capacity. Safe Working Loads (SWL) displayed in the below chart apply to loading in any direction. These Lifting Pin Anchors are designed to meet the OSHA requirements of a 4 to 1 Safety Factor.

Standard Finish is Hot-Dipped Galvanized

Part Number	Ton	Length (in.)	Min. Slab Thickness (in.)	1500 PSI, 4:1 SWL (lbs)	2000 PSI, 4:1 SWL (lbs)	2500 PSI, 4:1 SWL (lbs)	3000 PSI, 4:1 SWL (lbs)	3500 PSI, 4:1 SWL (lbs)	4000 PSI, 4:1 SWL (lbs)	4500 PSI, 4:1 SWL (lbs)	5000 PSI, 4:1 SWL (lbs)	Min. Edge Distances (in.)
LPA1T258G	1T	2-5/8"	3-1/2"	1,415	1,630	1,825	2,000	2,000	2,000	2,000	2,000	6"
LPA1T338G	1T	3-3/8"	5"	1,820	2,000	2,000	2,000	2,000	2,000	2,000	2,000	7"
LPA1T434G	1T	4-3/4"	6"	2,000	2,000	2,000	2,000	2,000	2,000	2,000	2,000	8"
LPA2T234G	2T	2-3/4"	4"	1,375	1,585	1,775	1,940	2,100	2,245	2,380	2,510	6"
LPA2T338G	2T	3-3/8"	5"	2,710	3,130	3,500	3,830	4,000	4,000	4,000	4,000	7"
LPA2T434G	2T	4-3/4"	6"	3,500	4,000	4,000	4,000	4,000	4,000	4,000	4,000	10"
LPA2T512G	2T	5-1/2"	7"	4,000	4,000	4,000	4,000	4,000	4,000	4,000	4,000	12"
LPA2T634G	2T	6-3/4"	8"	4,000	4,000	4,000	4,000	4,000	4,000	4,000	4,000	12"
LPA2T11G	2T	11"	12-1/2"	4,000	4,000	4,000	4,000	4,000	4,000	4,000	4,000	18"
LPA4T3G	4T	3"	4"	1,950	2,250	2,515	2,755	2,975	3,180	3,375	3,555	6"
LPA4T312G	4T	3 1/2"	5"	2,815	3,255	3,640	3,985	4,305	4,600	4,880	5,145	10"
LPA4T334G	4T	3-3/4"	5"	3,250	3,755	4,200	4,600	4,965	5,310	5,635	5,940	10"
			8"	4,225	4,880	5,460	5,980	6,460	6,905	7,325	7,720	12"*
LPA4T414G	4T	4-1/4"	6"	3,845	4,445	4,965	5,440	5,880	6,285	6,665	7,025	10"
LPA4T434G	4T	4-3/4"	6"	4,445	5,130	5,740	6,285	6,790	7,260	7,700	8,000	10"
			10"	5,420	6,260	7,000	7,665	8,000	8,000	8,000	8,000	14"*
LPA4T512G	4T	5-1/2"	7"	4,840	5,590	6,250	6,850	7,400	7,910	8,000	8,000	12"
LPA4T718G	4T	7-1/8"	9"	6,710	8,000	8,000	8,000	8,000	8,000	8,000	8,000	13"
LPA4T912G	4T	9-1/2"	11"	8,000	8,000	8,000	8,000	8,000	8,000	8,000	8,000	16"
LPA8T434G	8T	4-3/4"	6-1/2"	4,185	4,835	5,405	5,925	6,400	6,840	7,255	7,645	10"
LPA8T634G	8T	6-3/4"	8"	7,025	8,110	9,070	9,935	10,730	11,475	12,170	12,825	14"
			14"	9,715	11,215	12,540	13,740	14,840	15,865	16,000	16,000	21"*
LPA8T10G	8T	10"	12"	12,220	14,110	15,775	16,000	16,000	16,000	16,000	16,000	18"
LPA8T1338G	8T	13-3/8"	15"	16,000	16,000	16,000	16,000	16,000	16,000	16,000	16,000	22"
LPA8T2634G	8T	26-3/4"	29"	16,000	16,000	16,000	16,000	16,000	16,000	16,000	16,000	36"
LPA16T10G	16T	10"	11-1/2"	11,960	13,810	15,440	16,915	18,270	19,530	20,715	21,835	20"
			20"	16,970	19,595	21,910	24,000	25,920	27,710	29,295	30,985	24"*
LPA16T1934G	16T	19-3/4"	22"	28,000	32,000	32,000	32,000	32,000	32,000	32,000	32,000	36"
LPA20T10G	20T	10"	11-1/2"	11,960	13,810	15,440	16,915	18,270	19,530	20,715	21,835	20"
			20"	16,970	19,595	21,910	24,000	25,920	27,710	29,295	30,985	24"*
LPA20T1934G	20T	19-3/4"	22"	28,000	32,328	36,145	39,595	40,000	40,000	40,000	40,000	36"

- Shaded area indicates the capacity in concrete is limited by the mechanical capacity of the anchor

- The Safety Factor for the listed loads is approximately 4 to 1 in normal weight concrete (145-150PCF)
- Loads are based on normal anchor recess dimensions: 1T: 5/16"; 2T: 7/16"; 8T, 10T, 16T and 20T: 9/16"
- Loads are listed at varying concrete strengths (PSI) to accommodate varying conditions at time of loading
- *Concrete thickness exceeding the listed minimums may increase the listed capacity. Example: the 16/20Tx10" has two capacities listed, one for the 11-1/2" minimum slab and one for the 20" normal slab. These capacity gains are only obtained with the 4T x 3-3/4", 4T x 4-3/4", 8/10T x 6-3/4" and the 16/20Tx10" anchors. Contact ALP customer service for further assistance.
- Proper rigging and all lifting angle load magnifications are to be used to determine actual applied loads
- Minimal reinforcement required to achieve above load values

LIFTING PIN ANCHOR - DIMENSIONS AND MECHANICAL CAPACITIES

Ton	L - Length	HD - Head Diameter	RD - Rod Diameter	FD - Foot Diameter	Min. Steel Strength, 4:1 SWL (lbs)
1T	Varies	3/4”	3/8”	1”	2,000
2T	Varies	1”	9/16”	1-3/8”	4,000
4T	Varies	1-3/8”	3/4”	1-7/8”	8,000
8T	Varies	1-13/16”	1-3/32”	2-3/4”	16,000
16T	Varies	2-3/4”	1-1/2”	3-7/8”	32,000
20T	Varies	2-3/4”	1-1/2”	3-7/8”	40,000

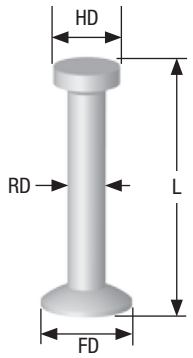

ALP LIFTING PIN EYE ANCHORS

LIFTING PIN EYE ANCHOR - DIMENSIONS AND CAPACITIES WITH REBAR

Part Number	Ton	L Length	HD - Head Diameter	RD - Rod Diameter	D Diameter	Min. Panel Thickness	Min. Corner Distance	Tension w/rebar 4:1 SWL (lbs)	Min. Anchor Spacing
LPEA1TG	1T	2-5/8”	11/16”	3/8”	3/8”	3”	8”	2,000	16”
LPEA2TG	2T	3-1/2”	1-1/32”	9/16”	9/16”	3”	4”	4,000	8”
LPEA4TG	4T	4-3/4”	1-11/32”	3/4”	3/4”	4”	6”	8,000	12”
LPEA8TG	8T	7-1/16”	1-7/8”	1-3/32”	1”	6”	8”	16,000	16”
LPEA16TG	16T	9-7/8”	2-3/4”	1-1/2”	1-7/16”	6-1/2”	10”	32,000	18”
LPEA20TG	20T	9-7/8”	2-3/4”	1-1/2”	1-7/16”	6-1/2”	10”	40,000	18”

- Based on 4:1 Safety Factor
- Min. concrete compressive strength 2,000 psi. Safe work loads are based on Anchors with rebar installed.
- Anchors must be centered when installed. Deviations will result in reduction of safe working loads.

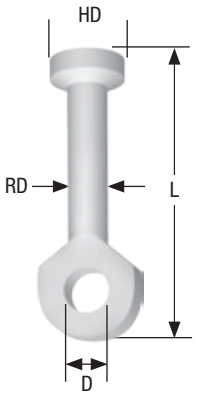

The Lifting Pin Eye Anchor utilizes rebar reinforcement which transfers tension loads deep into the concrete element and produces high safe working loads in thin wall sections.

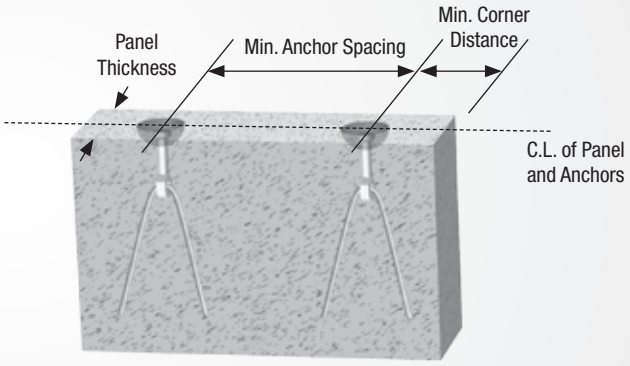

REBAR INFORMATION

Anchor Load Rating	Grade 60 Rebar Size	Rebar Total Length	SL - Spread Length		BR - Bending Radius
			Min.	Max.	
1T	0.306”	36”	12”	12”	3/4”
2T	#3	24”	6”	7-1/2”	1-1/4”
4T	#5	24”	7”	10”	2”
8T	#6	48”	10”	15”	2-1/2”
16T	#8	86”	12”	19-1/2”	3”
20T	#9	86”	12-1/2”	20”	3”

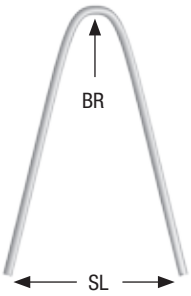

ALP LIFTING EYE - STANDARD

Designed as an attachment link for lifting and transport of precast concrete units in combination with the ALP Lifting Pin Anchor System. The Lifting Eye consists of a round body with a protruding lever arm and a high strength bail. The body has a "T" slot that engages the head of a Lifting Pin Anchor. The rotation capabilities allow the lifting eye to stay oriented in the direction of loading without binding up.

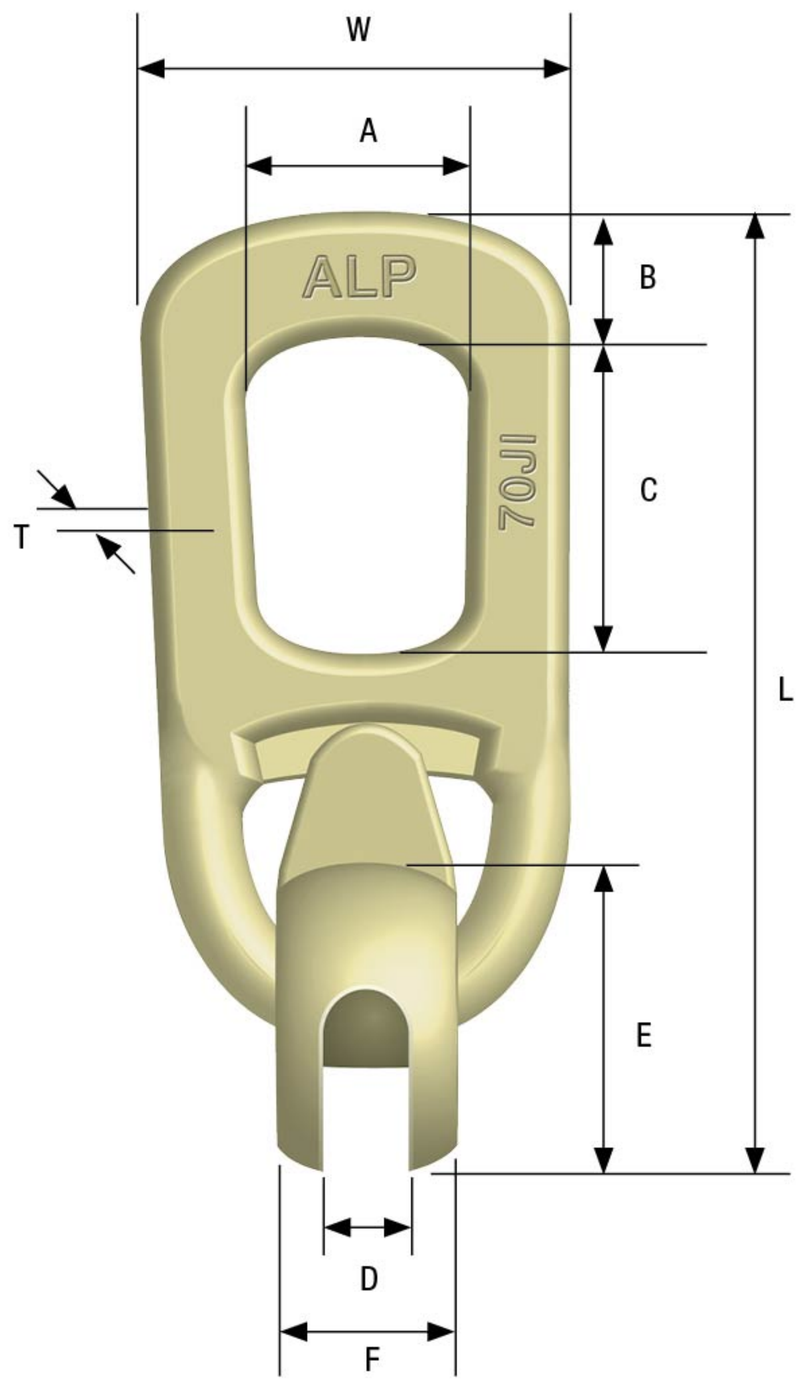

Part Number	Description / Capacity	Weight Each (lbs)	L	W	T	A	B	C	D	E	F	K Load Range (Tons)	Ultimate Capacity in Tension (lbs)
LPLE1T	Lifting Eye for 1T, 1.3T Anchors	2.20	7-11/32"	3"	1/2"	1-3/4"	7/8"	2-3/4"	15/32"	2-1/8"	1-5/16"	1-1.3	13,000
LPLE2T	Lifting Eye for 1.5T, 2T, 2.5T Anchors	3.60	9"	3-1/2"	5/8"	2-1/8"	1"	3-3/8"	11/16"	2-9/16"	1-5/8"	1.5-2.5	25,000
LPLE4T	Lifting Eye for 3T, 4T, 5T Anchors	7.65	11"	4-11/16"	11/16"	2-5/8"	1-15/32"	3-7/16"	29/32"	3-3/8"	2-1/4"	3-5	50,000
LPLE8T	Lifting Eye for 6T, 8T, 10T Anchors	21.70	15-1/2"	6-1/4"	1-1/16"	3-1/8"	2"	4-3/8"	1-1/4"	4-1/2"	2-15/16"	6-10	100,000
LPLE20T	Lifting Eye for 12T, 16T, 20T Anchors	39.00	20"	7-11/16"	1-3/8"	4-3/8"	2-13/16"	5-15/16"	1-11/16"	5-5/8"	4-3/8"	12-20	200,000

Rated load has a 5:1 safety factor.

Crosby® Alloy Screw Pin Shackles

Load Rated®

"QT" QUENCHED & TEMPERED

QUIC-CHECK®

APPLICATION INSTRUCTIONS
SEE PAGE 89 OF THE GENERAL CATALOG

G-209A

G-209A Screw pin anchor shackles meet the performance requirements of Federal Specification RR-C-271F Type IVA, Grade B, Class 2, except for those provisions required of the contractor. For additional information, see page 444.

- Capacities 2 thru 21 metric tons. Meets performance requirements of Grade 8 shackles.
- Forged Alloy Steel – Quenched and Tempered, with alloy pins.
- Working Load Limit permanently shown on every shackle.
- Hot Dip Galvanized.
- Shackles can be furnished proof tested with certificates to designated standards, such as ABS, DNV, Lloyds, or other certification. Charges for proof testing and certification available when requested at the time of order.
- Approved for use at -40 degree C (-40 degree F) to 204 degree C (400 degree F).
- Meets or exceeds all requirements of ASME B30.26 including identification, ductility, design factor, proof load and temperature requirements. Importantly, these shackles meet other critical performance requirements including fatigue life, impact properties and material traceability, not addressed by ASME B30.26.

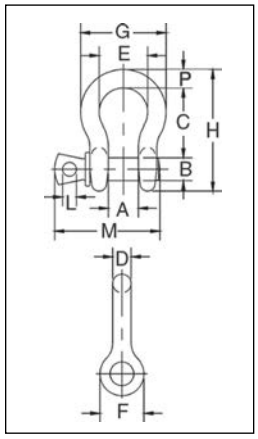

G-209A Crosby® Alloy Screw Pin Shackles

Nominal Size (in.)	Working Load Limit (t)*	G-209A Stock No.	Weight Each (lbs.)	Dimensions (in.)											Tolerance + / -	
				A	B	C	D	E	F	G	H	L	M	P	C	A
3/8	2	1017450	.31	.66	.44	1.44	.38	1.03	.91	1.78	2.49	.25	2.03	.38	.13	.06
7/16	2-2/3	1017472	.38	.75	.50	1.69	.44	1.16	1.06	2.03	2.91	.31	2.38	.44	.13	.06
1/2	3-1/3	1017494	.63	.81	.63	1.88	.50	1.31	1.19	2.31	3.28	.38	2.69	.50	.13	.06
5/8	5	1017516	1.38	1.06	.75	2.38	.63	1.69	1.50	2.94	4.19	.44	3.34	.69	.13	.06
3/4	7	1017538	2.35	1.25	.88	2.81	.75	2.00	1.81	3.50	4.97	.50	3.97	.81	.25	.06
7/8	9-1/2	1017560	3.61	1.44	1.00	3.31	.88	2.28	2.09	4.03	5.83	.50	4.50	.97	.25	.06
1	12-1/2	1017582	5.32	1.69	1.13	3.75	1.00	2.69	2.38	4.69	6.56	.56	5.07	1.06	.25	.06
1-1/8	15	1017604	7.25	1.81	1.25	4.25	1.16	2.91	2.69	5.16	7.47	.63	5.59	1.25	.25	.06
1-1/4	18	1017626	9.88	2.03	1.38	4.69	1.29	3.25	3.00	5.75	8.25	.69	6.16	1.38	.25	.06
1-3/8	21	1017648	13.25	2.25	1.50	5.25	1.42	3.63	3.31	6.38	9.16	.75	6.84	1.50	.25	.13

* Maximum Proof Load is 2 times the Working Load Limit (metric tons) and 2.2 times the Working Load Limit (short tons). Minimum Ultimate Strength is 4.5 times the Working Load Limit for metric tonnes, and 5 times the Working Load Limit for short tons. For Working Load Limit reduction due to side loading applications, see page 91.

Load Rated®

"QT" QUENCHED & TEMPERED

APPLICATION INSTRUCTIONS
SEE PAGE 89 OF THE GENERAL CATALOG

G-2169

S-2169

- Capacities of 7, 12.5 and 18 metric tons.
- Quenched and Tempered for maximum strength.
- Forged Alloy Steel.
- Available in galvanized and self colored finished.
- Individually proof tested and magnetic particle inspected. Crosby certification available at time of order.
- Meets or exceeds all requirements of ASME B30.26 including identification, ductility, design factor, proof load and temperature requirements. Importantly, these shackles meet other critical performance requirements including fatigue life, impact properties and material traceability, not addressed by ASME B30.26.
- Look for the Red Pin® . . . the mark of genuine Crosby quality.

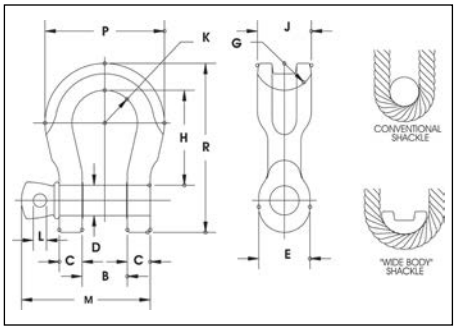

G-2169 / S-2169 Screw Pin "Wide Body" Shackles

Working Load Limit (t)*	G-2169 Stock No.	S-2169 Stock No.	Weight Each (lbs.)	Dimensions (in.)											
				B +/- .25	C	D +/- .02	E	G	H	J	K	L	M	P	R
7	1021655	1021664	3.5	1.25	.69	.88	1.82	1.25	3.56	1.60	1.25	.50	3.97	4.10	5.87
12.5	1021673	1021682	8.8	1.69	.92	1.13	2.38	1.37	4.63	2.13	1.63	.56	5.13	5.51	7.63
18	1021691	1021699	13	2.03	1.16	1.38	2.69	1.50	5.81	2.50	2.00	.69	6.25	6.76	9.38

* Ultimate Load is 5 times the Working Load Limit. Forged Alloy Steel. Proof Load is 2 times the Working Load Limit.

Copyright © 2013 The Crosby Group LLC
All Rights Reserved

TUFLEX ENDLESS ROUNDSLINGS

Tuflex Endless (EN)
The Most Versatile *Tuflex* Roundsling

Features, Advantages and Benefits

Maintains all the basic *Tuflex* features plus...

Promotes Safety

- Load stability and balance can be achieved by spreading sling legs.

Saves Money

- Wear points can be shifted to extend sling life
- The most flexible style of sling

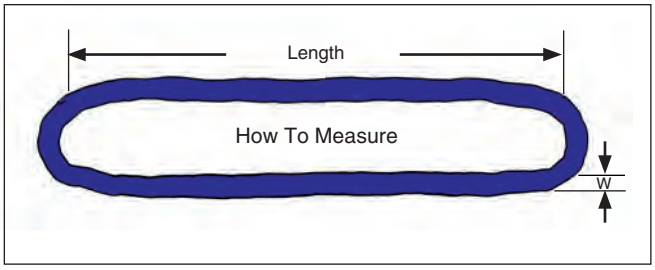

Part No.	Color		Rated Capacity (lbs.)* Vertical	Choker	Basket @ 90°	Basket @ 45°	Minimum Length (ft.)	Approximate Measurements Weight (lbs. / ft.)	Body Dia. Relaxed (in.)	(W) Width at Load (in.)	Minimum Hardware Dia. ** (in.)
EN30	Purple		2,600	2,100	5,200	3,600	1 1/2	.2	5/8	1	7/16
EN60	Green		5,300	4,200	10,600	7,400	1 1/2	.3	7/8	1 3/8	5/8
EN90	Yellow		8,400	6,700	16,800	11,800	3	.5	1 1/8	1 3/4	3/4
EN120	Tan		10,600	8,500	21,200	14,000	3	.6	1 1/8	1 7/8	7/8
EN150	Red		13,200	10,600	26,400	18,000	3	.8	1 3/8	2	1
EN180	White		16,800	13,400	33,600	23,000	3	.9	1 3/8	2 1/8	1 1/8
EN240	Blue		21,200	17,000	42,400	29,000	3	1.3	1 3/4	2 5/8	1 3/16
EN360	Grey		31,000	24,800	62,000	43,000	3	1.7	2 1/4	3 1/4	1 1/2
EN600	Brown		53,000	42,400	106,000	74,000	8	2.8	2 3/4	4	2
EN800	Olive		66,000	52,800	132,000	93,000	8	3.4	3 1/8	4 5/8	2 1/8
EN1000	Black		90,000	72,000	180,000	127,000	8	4.3	3 5/8	5 1/4	2 1/2

* **⚠ WARNING** Do not exceed rated capacities. Sling capacity decreases as the angle from horizontal decreases. Slings should not be used at angles of less than 30°. Refer to Effect of Angle chart page 12.

** This is the smallest recommended connection hardware diameter to be used for a vertical hitch.

S.D. Ireland
Concrete Construction Corporation
802-863-6222 • Fax: 802-860-1528
www.sdireland.com

CONCRETE MIX DESIGN

6000 psi

SCC

SDI MIX CODE: P60TER

DATE: July 18, 2013 **PLANT:** Burlington, VT

PROJECT: **General DOT Precast - 2014**

FINE AGGREGATE#1: ASTM C 33	Source:	Hinesburg Sand & Gravel
	Specific Gravity:	2.65 (Abs.: 1.34%)
	Fineness Modulus:	2.92
FINE AGGREGATE#2: Fine Grade	Source:	Hinesburg Sand & Gravel
	Specific Gravity:	2.65 (Abs.: 1.34%)
	Fineness Modulus:	1.49 (17.8% replacement)
COARSE AGGREGATE: ASTM C 33	Source:	S.D. Ireland, Brownell Quarry
	Specific Gravity:	2.80 (Abs.: 0.30%)
	Description	3/4" 100% Crushed Stone (Size #67)
CEMENT:	Ternary Blend Cement; Lefarge North America Lakes and Seaway Re St. Constant, Quebec (Sp. Gvty. 3.02)	
ADMIXTURES:	Water Reducer (HRWR): Glenium 7500; BASF Air Entraining Agent: Darex II AEA; Grace Concrete Chemicals	

CONSTITUENTS (LBS. /YD³)

		Abs.Vol.
Coarse Aggregate (SSD)	1750	10.02
Fine Aggregate #1(SSD)	829	5.01
Fine Aggregate #2 (SSD)	180	1.09
Cement	800	4.25
Water	304.6	4.88
Air Content (Entrained)	6.5%	1.75
Total	3864	27.00ft³

MIX PROPERTIES

Water Cement Ratio: 0.38
Entrained Air Content: 5.0 % – 9.0%
Spread: 20" to 27"
Dry Unit Weight: 144.2 ± pcf

***ADMIXTURE(S) DOSEAGE (OZ. /YD³)**

Glenium 7500 (HRWR)	44 - 64
Darex II AEA	2.5

*Admixture dosage rates are subject to change.