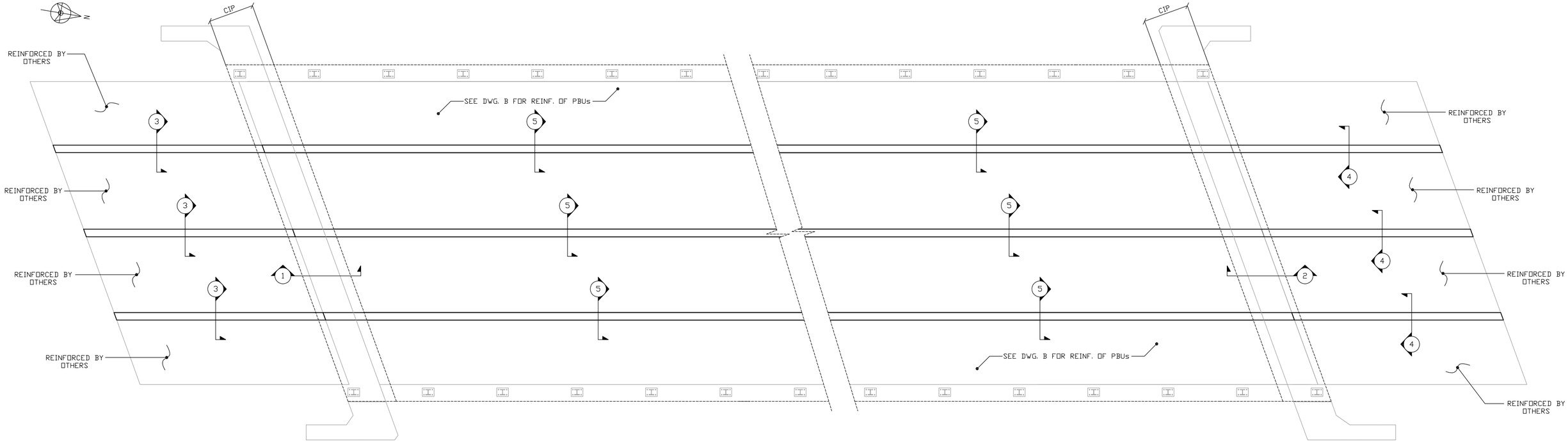

Drawing Sheet : A						BAR LIST											
Bar Mark	Qty	Size	Total Length	Type	'A'	'B'	'C'	'D'	'E'	'F'	'G'	'H'	'J'	'K'	'O'	'R'
51A102	12	#5	19'-7"			19'-7"										
51A501	✳ 14	#5	35'-0"			35'-0"										
51A502	8	#5	35'-0"			35'-0"										
51A503	16	#5	7'-1"			7'-1"										
51A504	12	#5	3'-0"			3'-0"										
51A550	18	#5	14'-10"	T1	0'-5 ½"	3'-4 ½"	3'-7"	3'-4 ½"	3'-7"		0'-5 ½"					
51A551	18	#5	14'-6"	T1	0'-5 ½"	3'-4 ½"	3'-5"	3'-4 ½"	3'-5"		0'-5 ½"					
51A553	✳ 12	#5	30'-0"			30'-0"										
51A554	12	#5	19'-0"			19'-0"										
52A102	12	#5	19'-7"			19'-7"										
52A501	14	#5	35'-0"			35'-0"										
52A502	8	#5	35'-0"			35'-0"										
52A503	16	#5	7'-1"			7'-1"										
52A504	12	#5	3'-0"			3'-0"										
52A550	18	#5	14'-10"	T1	0'-5 ½"	3'-4 ½"	3'-7"	3'-4 ½"	3'-7"		0'-5 ½"					
52A551	18	#5	14'-6"	T1	0'-5 ½"	3'-4 ½"	3'-5"	3'-4 ½"	3'-5"		0'-5 ½"					
61A650	✳ 37	#6	7'-2"	17		3'-7"	3'-7"									
62A650	✳ 37	#6	7'-2"	17		3'-7"	3'-7"									
81A801	✳ 22	#8	2'-0"			2'-0"										
82A801	✳ 22	#8	2'-0"			2'-0"										

✳ BARS FOR TESTING PURPOSES INCLUDED

CONTRACT DWGS. BAR MARK

BAR SIZE

5 | 1A501

Length

0

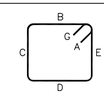

T1 Hooks A & G optional

17

ALL DUAL COATED REINF. DENOTED (Z)

LEGEND:
CONT.-CONTINUOUS
TRANS.-TRANSVERSE
DWLS.-DOWELS
VERTS.-VERTICAL
HORIZ.-HORIZONTAL
T&B -TOP & BOTTOM
I.F.-INNER FACE
O.F.-OUTER FACE
E.E.-EACH END
E.F.-EACH FACE
F.F.-FRONT FACE
R.F.-REAR FACE
E.W.-EACH WAY
O.C.-ON CENTER
L.W.-LONG WAY
S.W.-SHORT WAY

FOR APPROVAL

ELEVATIONS & DIMENSIONS SHOWN ON THIS DWG. ARE FOR REINF. DETAILING PURPOSES ONLY AND ARE NOT INTENDED FOR CONSTRUCTION.

REINF. BARS ASTM A615 GRADE 60 DUAL COATED

VERIFICATION OF UNCLEAR INFORMATION MAY BE REQUESTED ON THIS DRAWING. SHOULD VERIFICATION BE LEFT UN-ADDRESSED IT WILL REMAIN AS SHOWN AND ASSUME TO BE CORRECT.

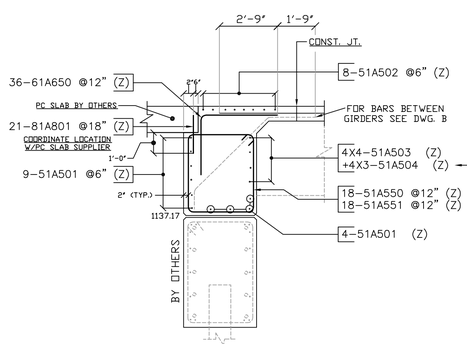

SECT. 1

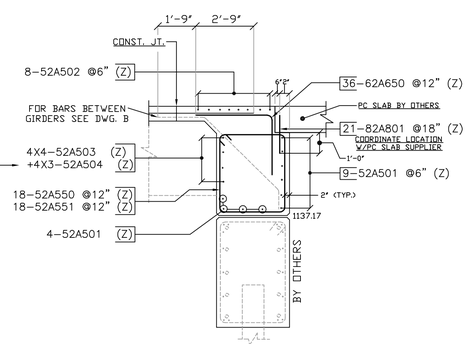

SECT. 2

PLEASE CONFIRM 7" LAP

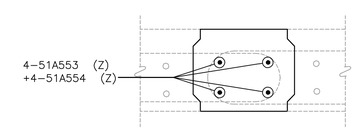

(3 THUS)

SECT. 5

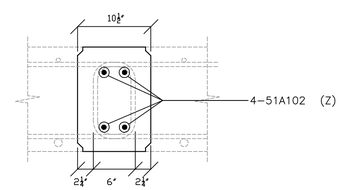

(3 THUS)

SECT. 3

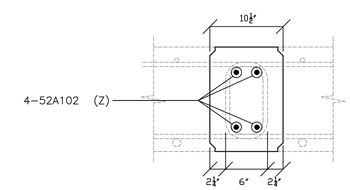

(3 THUS)

SECT. 4

6			
5			
4			
3			
2			
1	3-3-14		FOR APPROVAL
	DATE	REV.#	SENT FOR

DIMENSION
DIMENSION FABRICATORS INC.
2000 7TH STREET
SCOTIA, N.Y. 12302
PH: (518) 374-1936
FAX (518) 374-4630
www.dimensionfabricators.com

STRUCTURE	VTAOT WARREN BRF 013-4(32) PRECAST
LOCATION	BRIDGE 166 ROUTE 100 (MINOR ARTERIAL) WARREN, VT
ARCHITECT	
ENGINEER	
CUSTOMER	LUCK BROTHERS INC.
DRAWN BY ED	DATE 3/3/14 — DFI # 8747
DRAWING COVERS	LEVEL 2 ABUTMENT DUAL COATED CIP REINFORCING — DRAWING # A