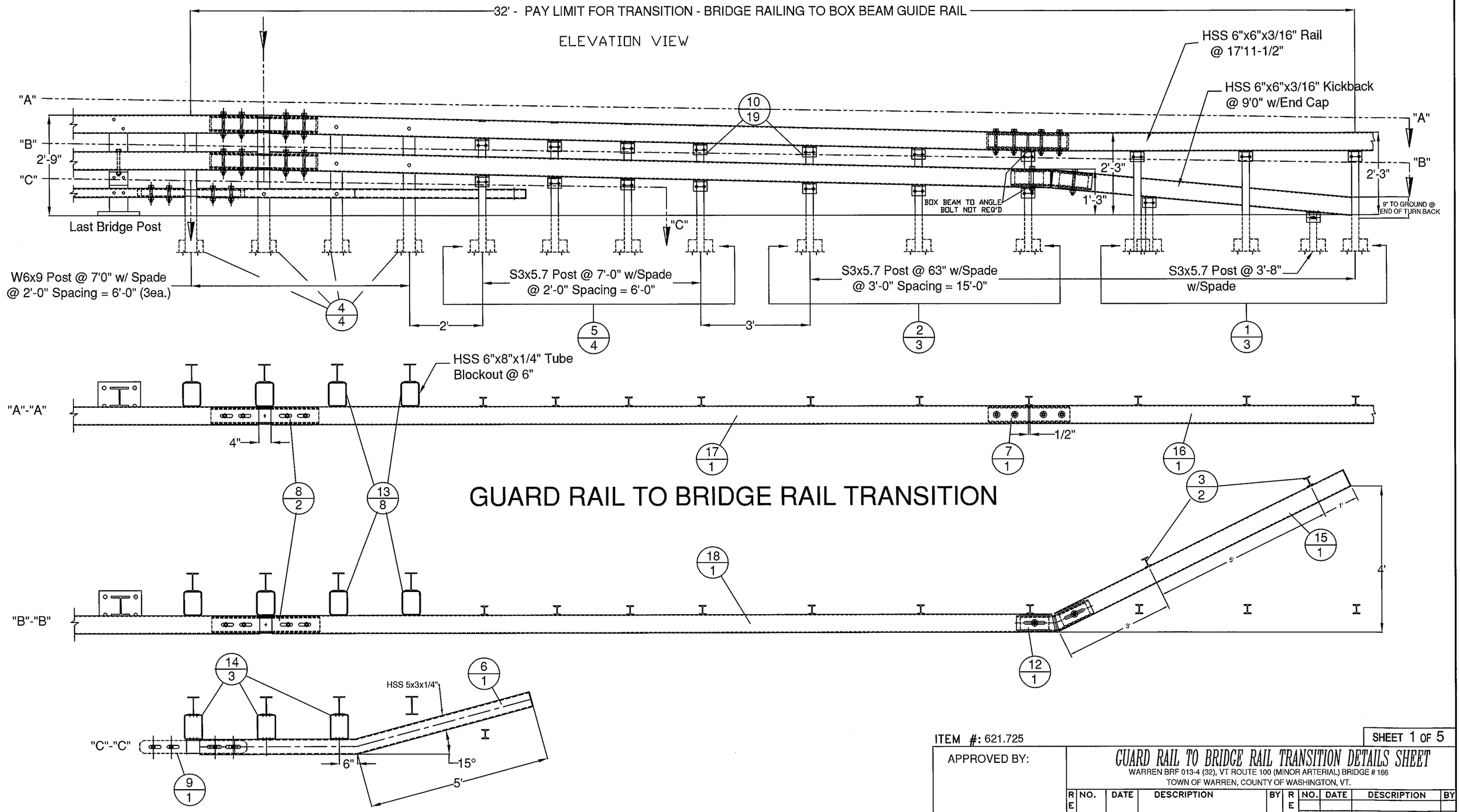

GUARD RAIL TO BRIDGE RAIL TRANSITION

ITEM #: 621.725

APPROVED BY:

SHEET 1 OF 5

GUARD RAIL TO BRIDGE RAIL TRANSITION DETAILS SHEET

WARREN BRF 013-4 (32), VT ROUTE 100 (MINOR ARTERIAL) BRIDGE # 166
TOWN OF WARREN, COUNTY OF WASHINGTON, VT.

REV	NO.	DATE	DESCRIPTION	BY	REV	NO.	DATE	DESCRIPTION	BY

ELDERLEE, INC.
OAKS CORNERS, NEW YORK 14518
E-Mail: dlong@elderlee.com
Tel: 315-789-6670 Fax: 315-789-6615

AISC CERTIFIED FABRICATOR

DRAWN	E.P.	4/24/14
CHECKED	D.L.	4/24/14
APPROVED	.	.
SCALE	SCHEMATIC	
DRAWING NO.	F.R. LAFAYETTE, WARREN-T	

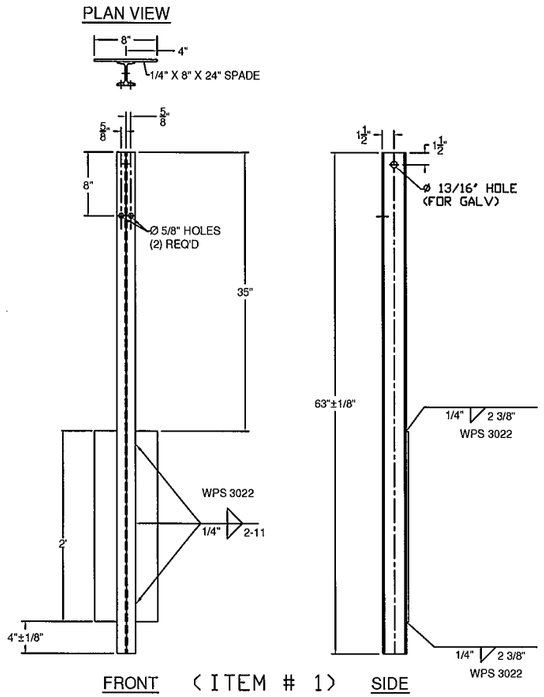

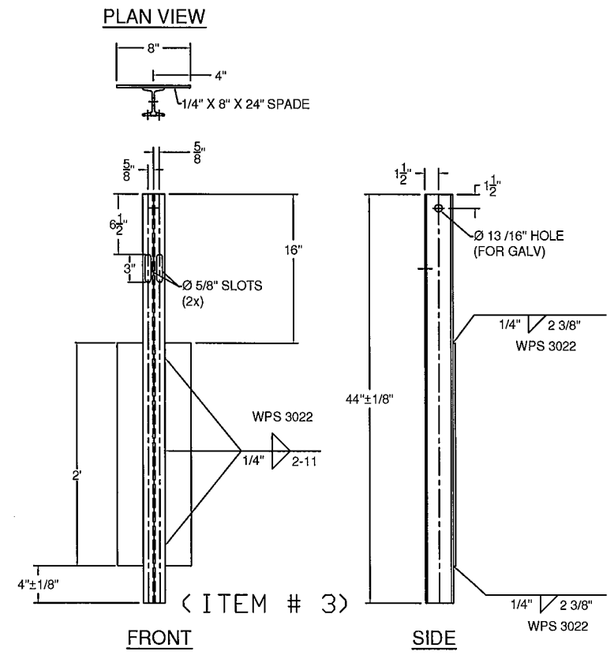

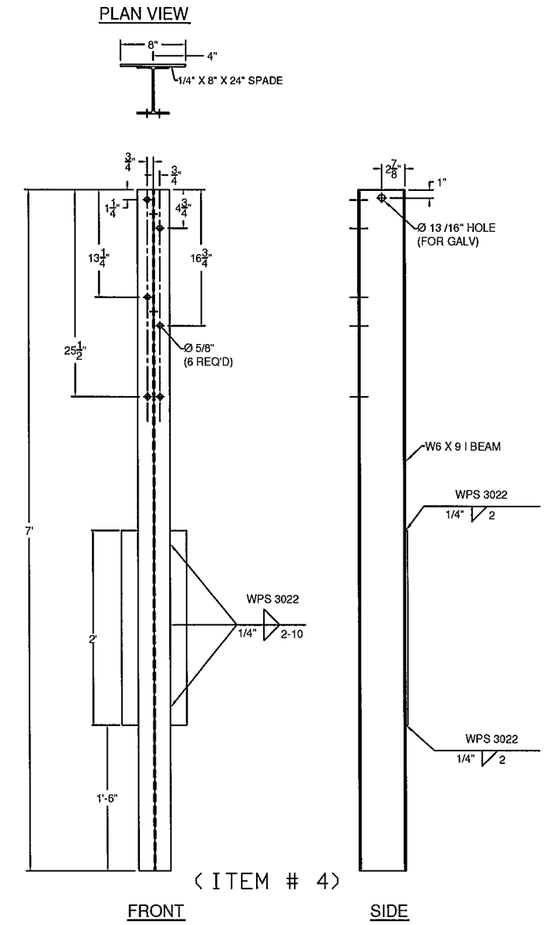

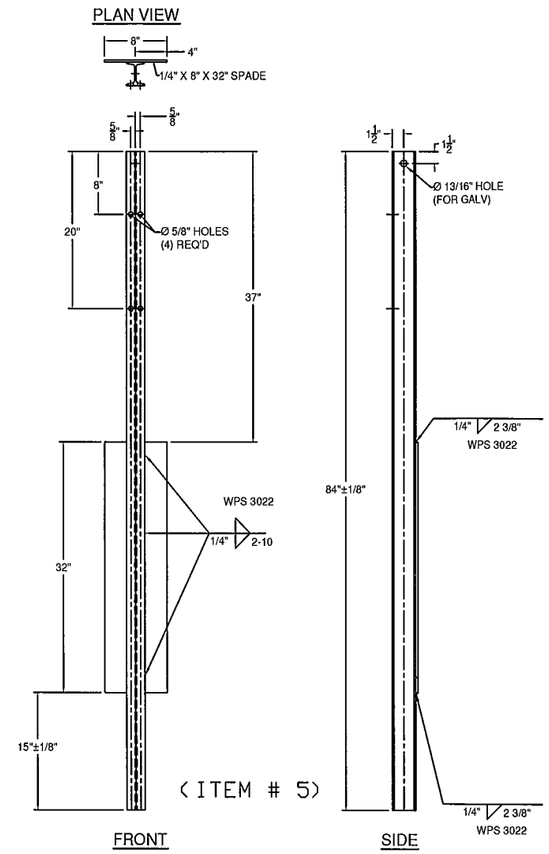

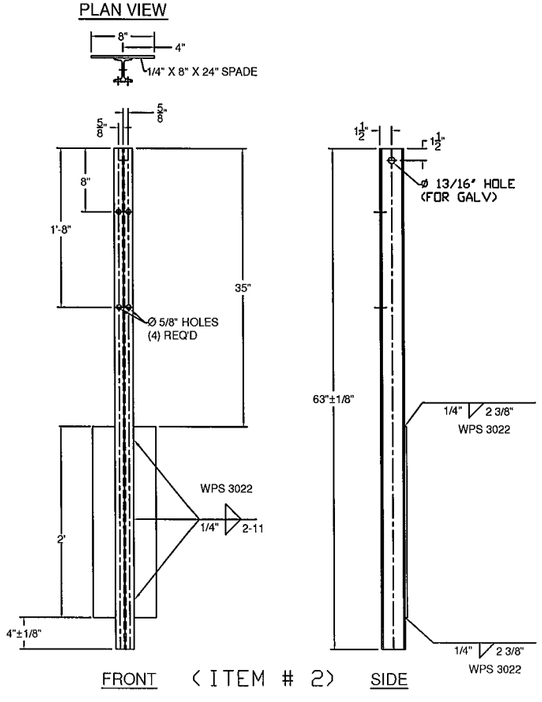

GENERAL NOTES:

1) ALL RAILING IS TO BE FABRICATED AND ERECTED ACCORDING TO SECTION 525 OF THE STANDARD SPECIFICATIONS.
2) BOLTS SHALL BE TORQUED SNUG TIGHT (APPROXIMATELY 100 FT-LB).
3) PROTRUSIONS CAUSED BY WELDING OR GALVANIZING ARE NOT PERMITTED ON THE ADJOINING SURFACES OF THE BOX BEAM RAILS, SPLICE TUBES AND FILL PLATES.
4) BOX BEAM TUBE AND STEEL POST MATERIALS, DIMENSION SIZES AND NOTES SHALL BE THE SAME AS THOSE OF THE BRIDGE RAIL, UNLESS OTHERWISE NOTED.
5) ANY BENDING OF RAIL SHALL BE DONE AT THE FABRICATION PLANT. RADII GREATER THAN 16' TO BE CURVED ON A TUBE BENDING MACHINE, RADII LESS THAN 16' TO BE "PIE CUT" AND WELDED. CURVED RAILING WIIL HAVE AN 18" LENGTH ON EACH END STRAIGHT TO ACCOMADATE SPLICES. "PIE CUTS ARE LOCATED SO AS TO NOT CONFLICT WITH POST FASTENING HOLES. PIE CUTS WILL BE WELDED ACCORDING TO PROCEDURE WPS-3026.

BILL OF MATERIALS (EACH CORNER)

ITEM #	QTY.	COMPONENT #	DESCRIPTION	MATERIAL (ASTM)
1	3	0013.57021	3' I-POST, PUNCH 8' W/SPD @ 63' LG	ASTM A572 Gr. 50
2	3	0013.57025	3' I-POST, PUNCH 8', & 20' W/SPD @ 63' LG	ASTM A572 Gr. 50
3	2	0013.57060	3' I-END POST W/SPD @ 3'-8' LG	ASTM A572 Gr. 50
4	4	0013.09001	W6X9 POST @ 7' W/SPD & 5/8' HOLES	ASTM A572 Gr. 50
5	4	0013.57010	3' I-POST, PUNCH 8' & 20', W/8X32' SPADE @7'	ASTM A572 Gr. 50
6	1	0033.80403	3X5' BTM TRANS RAIL W/5'-0' KB, EXP END	A500 Gr. B
7	1	0033.00640	HSS 5X5 TUBE SPLICE @27' LG W/ 1/4' SHIMS	A500 Gr. B / A572 Gr 50
8	2	0033.00730	HSS 5x5 EXP TUBE SPLICE @ 36' LG W/ 1/4' SHIMS	A500 Gr. B / A572 Gr 50
9	1	0033.00930	BR EXP BAR SPLICE 2-1/8' X 4-1/4' @ 36' LG	ASTM A36
10	19	0054.00050	REG BB SHELF ANGLES @ 4-1/2'	ASTM A36
12	1	0054.00074	HSS 5X5 DBL BEND TUBE SPL @ 27' LG,	A500 Gr. B / A572 Gr 50
13	8	0054.00563	6X8' TRANS. TUBE B/□ @ 6' LG	A500 Gr. B
14	3	0054.00565	6X8' TRANS. TUBE B/□ @ 3' LG	A500 Gr. B
15	1	0054.09000	6X6' BB @ 9'-0' KICKBACK, W/ CAP, & 13° MITER	A500 Gr. B / A36
16	0.5	0054.18000	6X6' BB @ 17'-11 1/2', DRILL 3' CC	A500 Gr. B
17	1	0054.90092	6X6' BB TOP TRANS @ 20'-9 5/8' LG W/EXP END	A500 Gr. B
18	1	0054.90093	6X6' BB BTM TRANS @ 21'-4 5/8' LG W/EXP END	A500 Gr. B
19	18	0080.03355	3/8' X 7 1/2' BOLT, NUT, & 2 FW	A307, A563, F436
20	19	0080.04100	1/2' x 1-1/2' BOLT, NUT, & FW	A307, A563, F436
21	22	0080.04120	1/2' x 1-1/2' BOLT, NUT, 2 FW & LW	A307, A563, F436
22	4	0080.06255	3/4' X 4-1/2' BOLT, NUT, 2 FW	A325, A563, F436
23	12	0080.06340	3/4' X 7-1/2' BOLT, NUT, 2 FW	A325, A563, F436
24	6	0080.06370	3/4' X 8' CARR BOLT, NUT, FW & LW	A307, A563, F436
25	2	0080.06400	3/4' X 8' BOLT, NUT, 2 FW, & LW	A325, A563, F436

HARDWARE NOTES

ITEM #	FUNCTION
19	BOLT RAIL TO SHELF ANGLE (ITEM #10)
20	BOLT SHELF ANGLE (ITEM #'S 10 & 11) TO POST
21	BOLT BLOCK-OUTS (ITEM #'S 13 & 14) TO HEAVY POST
22	(4) PER SPLICE BAR (ITEM #9)
23	(4) PER SPLICE TUBING (ITEM #'S 7 & 8)
24	BOLT RAIL (ITEMS #'S 6,17, & 18 TO BLOCK-OUTS (ITEM #'S 13 & 14) [WHERE FASTENED]
25	BOLT DOUBLE BEND SPLICE TUBE (ITEM #12) TO RAIL (ITEM #18) & KICKBACK (ITEM #15)

ITEM #: 621.725

SHEET 2 OF 5

APPROVED BY:

GUARD RAIL TO BRIDGE RAIL TRANSITION DETAILS SHEET

WARREN BRF 013-4 (32), VT ROUTE 100 (MINOR ARTERIAL) BRIDGE # 166
TOWN OF WARREN, COUNTY OF WASHINGTON, VT.

REV	NO.	DATE	DESCRIPTION	BY	REV	NO.	DATE	DESCRIPTION	BY

ELDERLEE, INC.
OAKS CORNERS, NEW YORK 14518
E-Mail: dlong@elderlee.com
Tel: 315-789-6670 Fax: 315-789-6615

AISC CERTIFIED FABRICATOR

DRAWN	E.P.	4/24/14
CHECKED	D.L.	4/24/14
APPROVED	.	.
SCALE	SCHEMATIC	
DRAWING NO.	F.R. LAFAYETTE, BRISTOL	

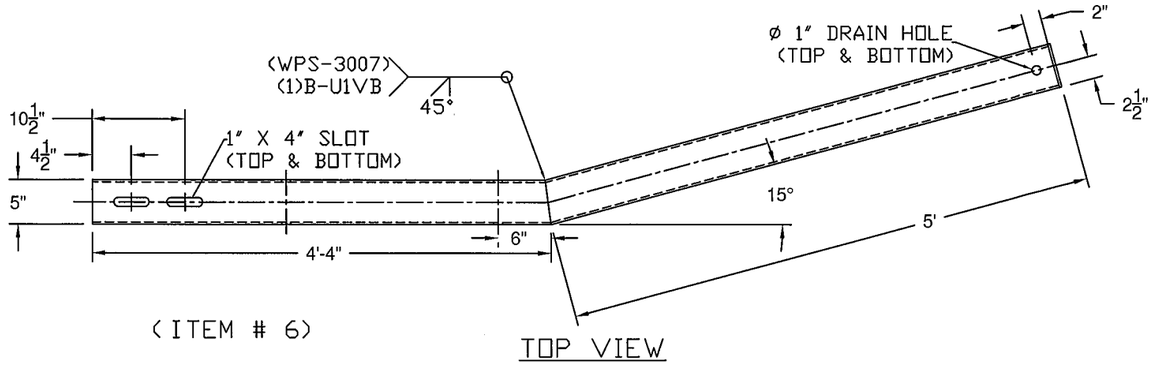

(ITEM # 6)

TOP VIEW

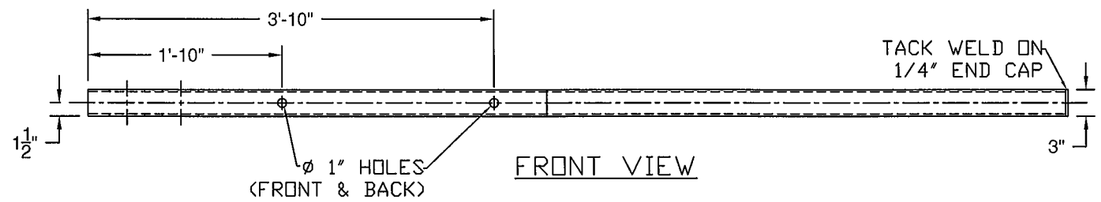

FRONT VIEW

BACK VIEW

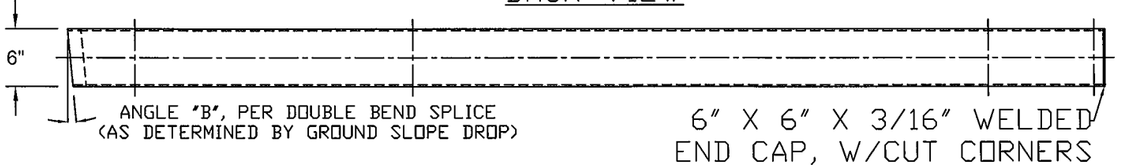

TOP VIEW

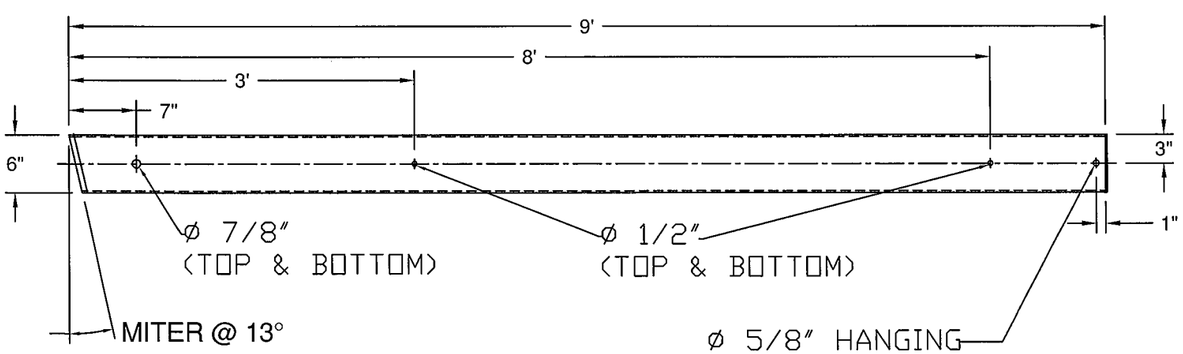

(ITEM # 15)

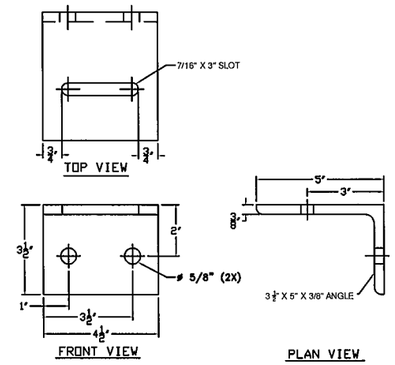

(ITEM # 10)

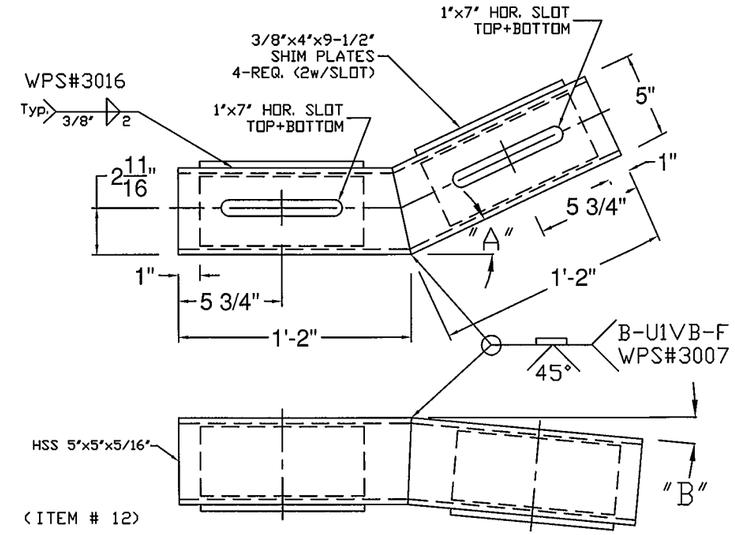

(ITEM # 12)

"A" - 26°
"B" - TURN DOWN ANGLE SET BY THE 9" MEASURMENT AT THE END OF THE BOX BEAM.

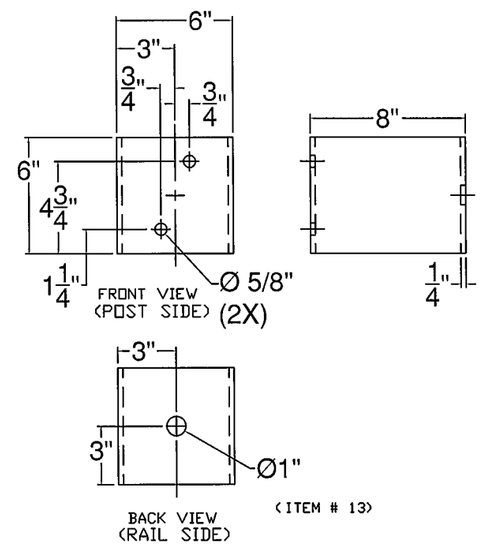

(ITEM # 13)

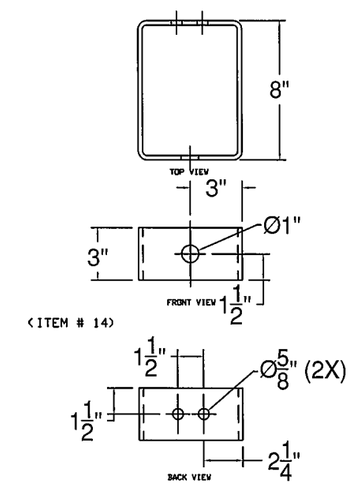

(ITEM # 14)

ITEM #: 621.725

F.R. LAFAYETTE, WARREN

SHEET 3 OF 5

APPROVED BY:

GUARD RAIL TO BRIDGE RAIL TRANSITION DETAILS SHEET

WARREN BRF 013-4 (32), VT ROUTE 100 (MINOR ARTERIAL) BRIDGE # 166

TOWN OF WARREN, COUNTY OF WASHINGTON, VT.

REV	NO.	DATE	DESCRIPTION	BY	REV	NO.	DATE	DESCRIPTION	BY

ELDERLEE, INC.
OAKS CORNERS, NEW YORK 14518
E-Mail: dlong@elderlee.com
Tel: 315-789-6670 Fax: 315-789-6615

AISC CERTIFIED FABRICATOR

DRAWN	E.P.	4/24/14
CHECKED	D.L.	4/24/14
APPROVED	.	.
SCALE	SCHEMATIC	
DRAWING NO.	F.R. LAFAYETTE, BRISTOL	

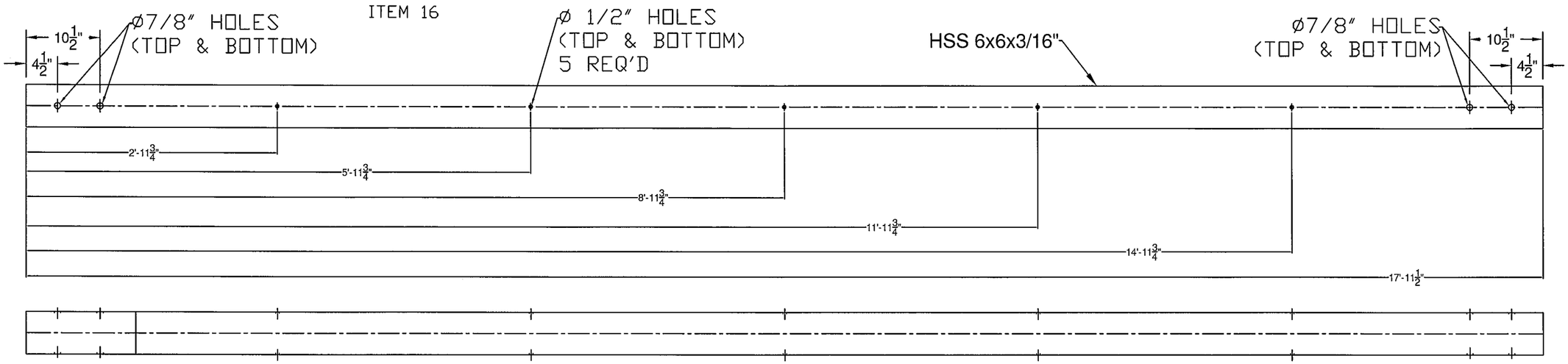

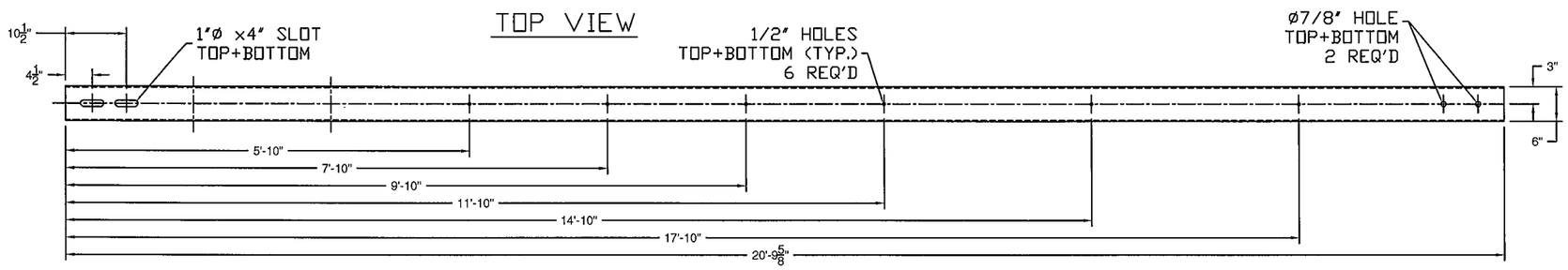

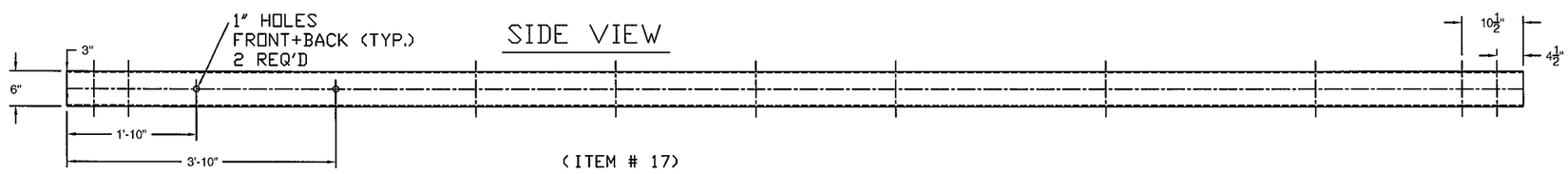

(ITEM # 17)

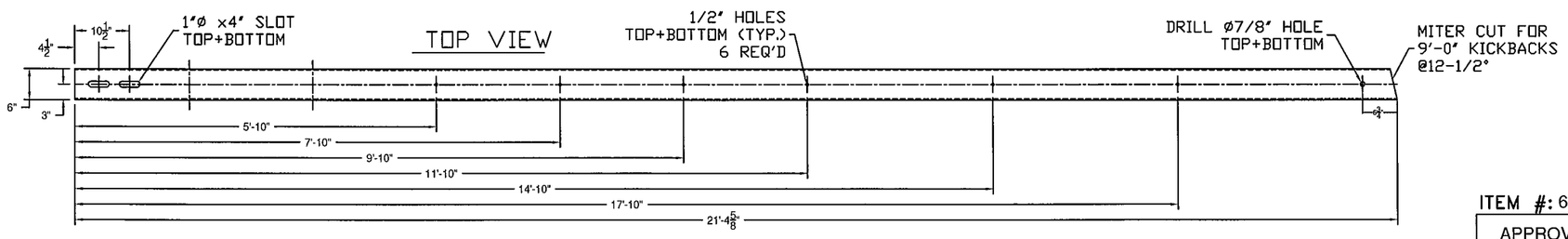

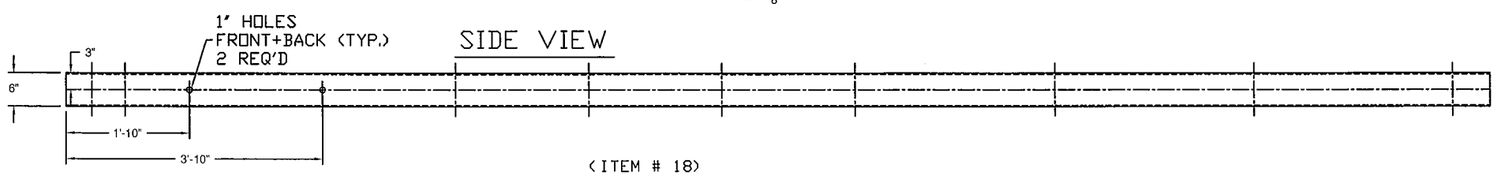

(ITEM # 18)

ITEM #: 621.725

F.R. LAFAYETTE, WARREN

SHEET 4 OF 5

APPROVED BY:

GUARD RAIL TO BRIDGE RAIL TRANSITION DETAILS SHEET

WARREN BRF 013-4 (32), VT ROUTE 100 (MINOR ARTERIAL) BRIDGE # 166

TOWN OF WARREN, COUNTY OF WASHINGTON, VT.

REV	NO.	DATE	DESCRIPTION	BY
				EP

REV	NO.	DATE	DESCRIPTION	BY

ELDERLEE, INC.
OAKS CORNERS, NEW YORK 14518
E-Mail: dlong@elderlee.com
Tel: 315-789-6670 Fax: 315-789-6615

AISC CERTIFIED FABRICATOR

DRAWN	E.P.	4/24/14
CHECKED	D.L.	4/24/14
APPROVED	.	.
SCALE	SCHEMATIC	
DRAWING NO.	F.R. LAFAYETTE, BRISTOL	

SPLICE BAR - EXPANSION

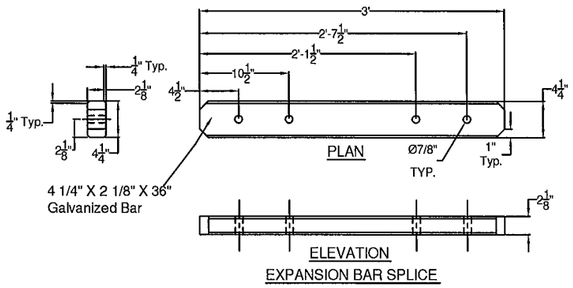

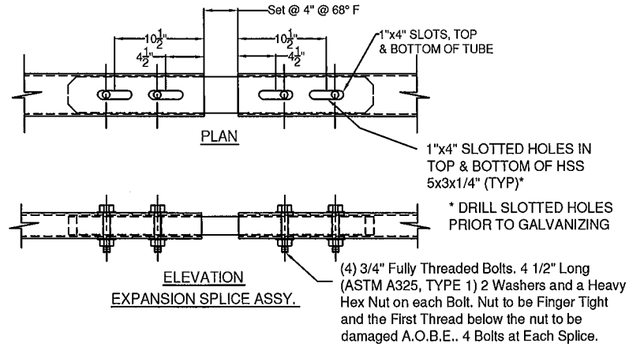

(ITEM # 9)

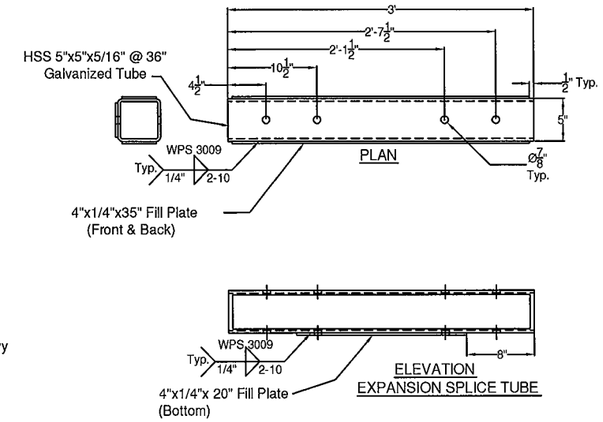

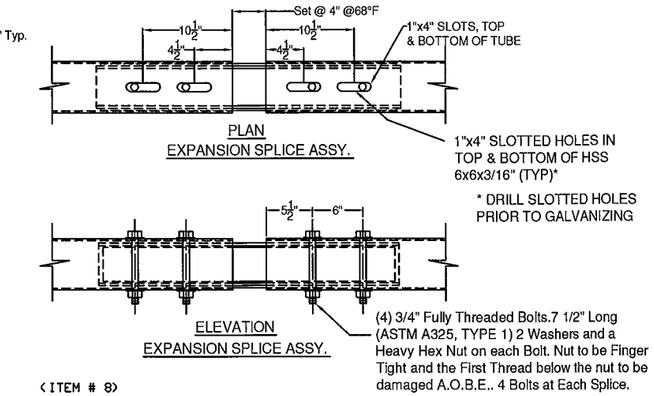

SPLICE TUBE - EXPANSION

(ITEM # 8)

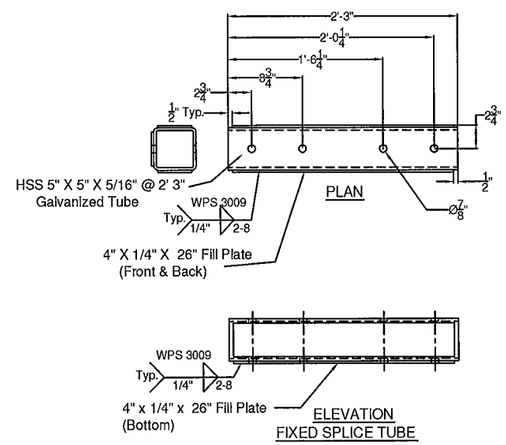

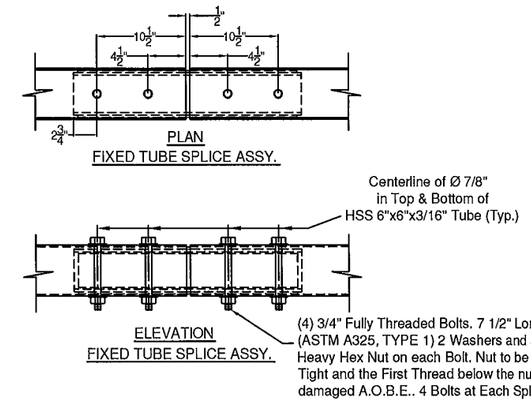

(ITEM # 7)

SPLICE TUBE - FIXED

ITEM #: 621.725

F.R. LAFAYETTE, WARREN

SHEET 5 OF 5

APPROVED BY:

GUARD RAIL TO BRIDGE RAIL TRANSITION DETAILS SHEET

WARREN BRF 013-4 (32), VT ROUTE 100 (MINOR ARTERIAL) BRIDGE # 166

TOWN OF WARREN, COUNTY OF WASHINGTON, VT.

REV	NO.	DATE	DESCRIPTION	BY	REV	NO.	DATE	DESCRIPTION	BY
				EP					

ELDERLEE, INC.
OAKS CORNERS, NEW YORK 14518
E-Mail: dlong@elderlee.com
Tel: 315-789-6670 Fax: 315-789-6615

AISC CERTIFIED FABRICATOR

DRAWN	E.P.	4/24/14
CHECKED	D.L.	4/24/14
APPROVED	.	.
SCALE	SCHEMATIC	
DRAWING NO.	F.R. LAFAYETTE, BRISTOL	

WELDING PROCEDURE SPECIFICATION

PQR ELDERLEE#3

Material Specification	A500 GR B
Welding Process	FCAW-G
Manual or Machine	SEMAUTOMATIC
Position of Welding	FLAT/HORIZONTAL
Filler Metal Specification	A5.29
Filler Metal Classification	E81T1-Ni1C-JH4
Flux	N/A
Shielding Gas	CO 2 Dew Point -40DEG F Flow Rate 50CFH
Single or Multiple Pass	SINGLE
Single or Multiple Arc	SINGLE
Welding Current	DC
Polarity	REVERSE ELECTRODE POSITIVE
Welding Progression	STRINGER
Root Treatment	PER D1.5
Preheat and Interpass Temperature	PER D1.5
Postheat Temperature	NONE
Heat Input	Min Max

WELDING PROCEDURE

Pass no.	Electrode size	Welding Current Amperes	Welding Current Volts	Travel speed	Joint detail
1	1/16	310	25	11	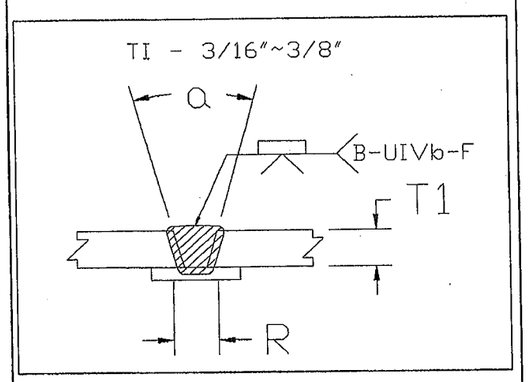
Variable	LIMITS	341 TO 269	27 TO 23	12 TO 10	

This procedure may vary due to fabrication sequence, fit-up, pass size, etc., within the limitation of variables given in Section 5.

Procedure No. 3007

Revision No.

Contractor Elderlee, Inc.

Authorized By RANDY SCOTT

Date 3/20/2014

WELDING PROCEDURE SPECIFICATION

PQR ELDERLEE #3

Material Specification	A709 TO A500 GR B
Welding Process	FCAW-G
Manual or Machine	SEMAUTOMATIC
Position of Welding	FLAT/HORIZONTAL
Filler Metal Specification	A5.29
Filler Metal Classification	E81T1-Ni1C-JH4
Flux	N/A
Shielding Gas	CO 2 Dew Point -40DEG F Flow Rate 50CFH
Single or Multiple Pass	SINGLE
Single or Multiple Arc	SINGLE
Welding Current	DC
Polarity	REVERSE ELECTRODE POSITIVE
Welding Progression	STRINGER
Root Treatment	D1.5
Preheat and Interpass Temperature	D1.5
Postheat Temperature	NONE
Heat Input	Min _____ Max _____

WELDING PROCEDURE

Pass no.	Electrode size	Welding Current Amperes	Welding Current Volts	Travel speed	Joint detail
1	1/16	310	25	11	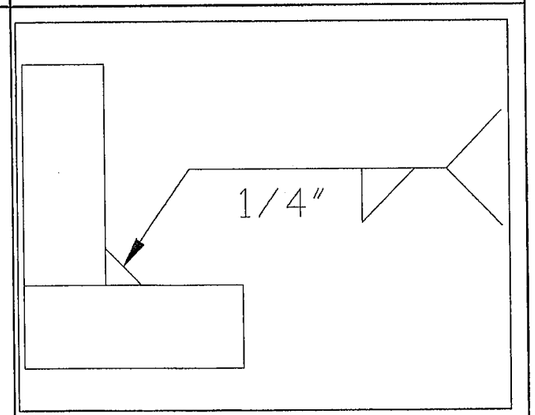
Variable	LIMITS	341 TO 269	27 TO 23	12 TO 10	

This procedure may vary due to fabrication sequence, fit-up, pass size, etc., within the limitation of variables given in Section 5.

Procedure No.	3009	Contractor	Elderlee, Inc.
Revision No.		Authorized By	RANDY SCOTT
		Date	3/20/2014

WELDING PROCEDURE SPECIFICATION

PQR ELDERLEE #3

Material Specification	ASTM-A36 A709 GR 36 CVN
Welding Process	FCAW-G
Manual or Machine	SEMAUTOMATIC
Position of Welding	FLAT/HORIZONTAL
Filler Metal Specification	A5.29
Filler Metal Classification	E81T1-Ni1C-JH4
Flux	N/A
Shielding Gas	CO 2 Dew Point -40DEG F Flow Rate 50CFH
Single or Multiple Pass	SINGLE
Single or Multiple Arc	SINGLE
Welding Current	DC
Polarity	REVERSE
Welding Progression	STRINGER
Root Treatment	PER D1.5
Preheat and Interpass Temperature	PER D1.5
Postheat Temperature	NONE
Heat Input	Min _____ Max _____

WELDING PROCEDURE

Pass no.	Electrode size	Welding Current Amperes	Welding Current Volts	Travel speed	Joint detail
1	1/16	310	25	11	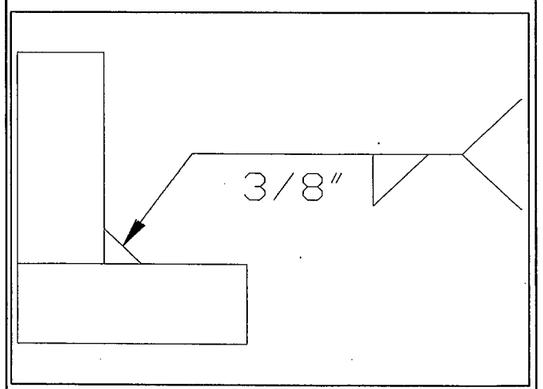
Variable	LIMITS	341 TO 269	27 TO 23	12 TO 10	

This procedure may vary due to fabrication sequence, fit-up, pass size, etc., within the limitation of variables given in Section 5.

Procedure No.	3016	Contractor	Elderlee, Inc.
Revision No.		Authorized By	RANDY SCOTT
		Date	3/24/2014

WELDING PROCEDURE SPECIFICATION

Material Specification	ASTM A36-08
Welding Process	GMAW
Manual or Machine	SEMIAUTOMATIC/ROBOTIC
Position of Welding	FLAT/HORIZONTAL
Filler Metal Specification	A5.18
Filler Metal Classification	L-56 LINCOLN
Flux	N/A
Shielding Gas	90% ARGON /10% CO2 Dew Point -40DEG F Flow Rate 45CFH
Single or Multiple Pass	SINGLE
Single or Multiple Arc	SINGLE
Welding Current	DC
Polarity	REVERSE
Welding Progression	STRINGER
Root Treatment	PER D1.5
Preheat and Interpass Temperature	PER D1.5
Postheat Temperature	NONE
Heat Input	Min Max

WELDING PROCEDURE

Pass no.	Electrode size	Welding Current Amperes	Welding Current Volts	Travel speed	Joint detail
	.045	190	22	19	
Variable	LIMITS	171 TO 209	20 TO 24	17 TO 21	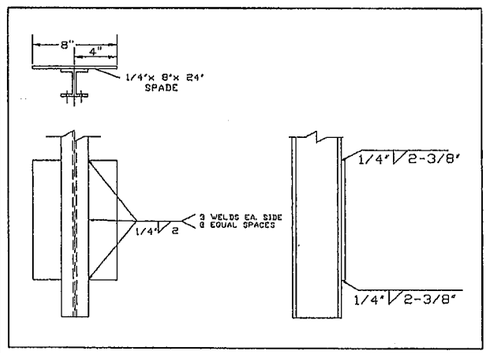

This procedure may vary due to fabrication sequence, fit-up, pass size, etc., within the limitation of variables given in Section 5.

Procedure No.	3022	Contractor	Elderlee, Inc.
Revision No.		Authorized By	RANDY SCOTT
		Date	3/20/2014