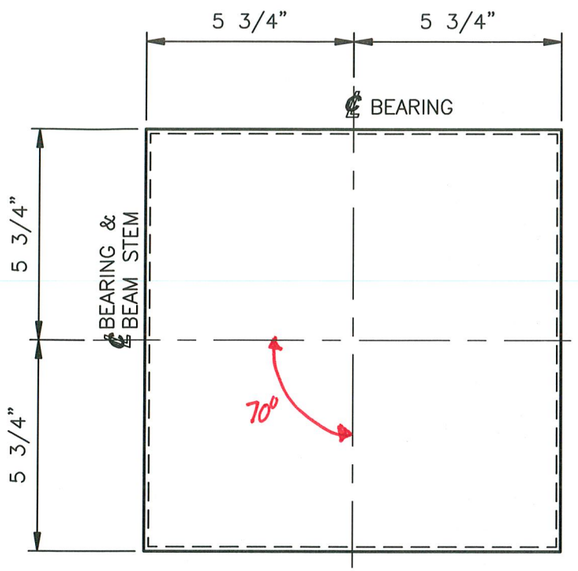

PLAN VIEW

Vermont Agency of Transportation
RECEIVED
Randolph BRO Submittal 1 - Elastomeric Bearing Pad - 20150112.pdf

CK'D BY MJC OK'D BY TAS

December 30, 2014

RESUBMIT Yes Rejected

BY M. J. Chenette DATE 01/13/15

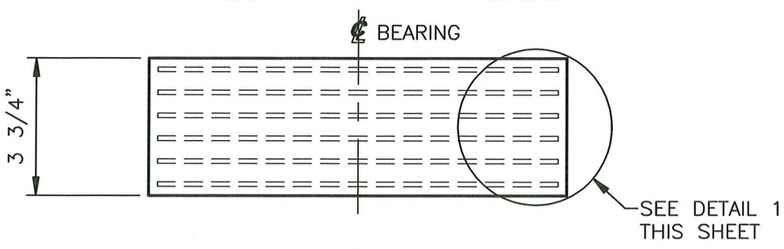

ELEVATION VIEW

LAMINATED ELASTOMERIC BEARING PAD

MARK: LEP1

(4) LOCATED AT ABUT. 1
(4) LOCATED AT ABUT. 2
(8) TOTAL REQUIRED FOR STRUCTURE

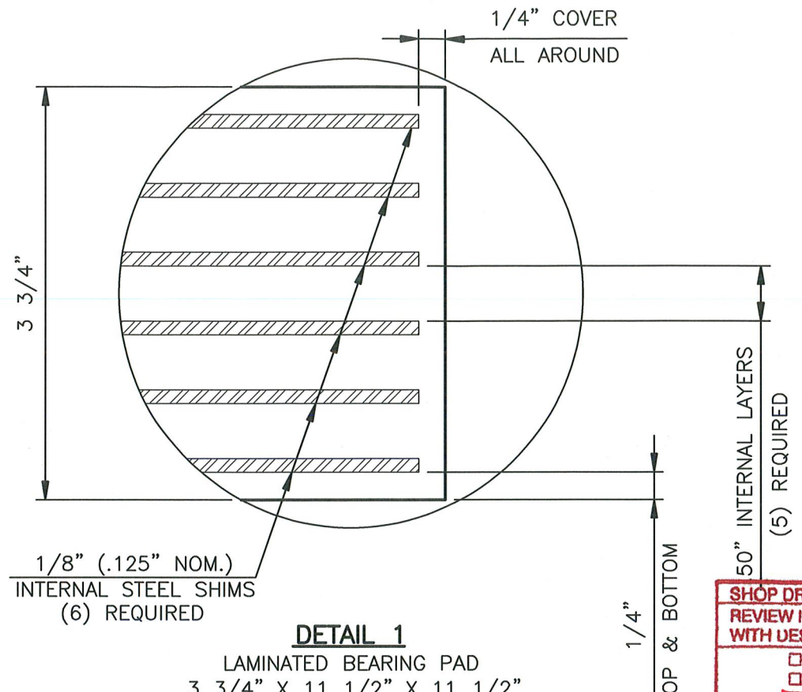

DETAIL 1

LAMINATED BEARING PAD
3 3/4" X 11 1/2" X 11 1/2"
60 DUROMETER GRADE 4 NATURAL RUBBER
WITH A SHEAR MODULUS OF 130 PSI TO 200 PSI ~~+/- 15%~~
(8) REQUIRED FOR STRUCTURE

TEST PAD

LAMINATED BEARING PAD
3 3/4" X 11 1/2" X 11 1/2"
60 DUROMETER GRADE 4 NATURAL RUBBER
WITH A SHEAR MODULUS OF 130 PSI TO 200 PSI ~~+/- 15%~~
(2) REQUIRED FOR TESTING

MAX. DESIGN SERVICE LOADS	
DEAD LOAD =	30.5 kips
LIVE LOAD =	30.4 kips

PLEASE PROVIDE SHOPS FOR THE SHIM PLATES REFERENCED IN NOTE 6 ON SHEET 23.

SHOP NOTES:

1. ALL BEARINGS SHALL CONFORM TO APPLICABLE SUBSECTIONS OF SECTIONS 531 AND 731 OF THE 2011 VTAOT STANDARD SPECIFICATIONS AND SPECIAL PROVISIONS.
2. MATERIAL:
   ELASTOMER: 60 DUROMETER GRADE 4 NATURAL RUBBER. WITH A SHEAR MODULUS OF 130 PSI – 200 PSI ~~±15%~~.
   STEEL LAMINAE: ASTM A709 GR.36, A1011 GRADE 36 OR EQUAL.
3. ALL BEARINGS SHALL BE MARKED PRIOR TO SHIPPING. ALL MARKS SHALL BE PERMANANT AND BE VISIBLE AFTER ERECTION.
4. ALL DIMENSIONS ARE IN INCHES.
5. COSMEC REPRESENTATIVE KERRY MARCHAND: (508) 455–3290
6. VT.A.O.T. WILL BE NOTIFIED (7) DAYS BEFORE THE START OF FABRICATION.

SHOP DRAWING REVIEW
REVIEW IS ONLY FOR GENERAL CONFORMANCE WITH DESIGN CONCEPT
☐ PROVIDE AS SUBMITTED
☐ PROVIDE AS CORRECTED
☒ REVISE AND RESUBMIT
☐ REJECTED - SEE REMARKS
☐ SUBMITTAL NOT REQUIRED - RETURNED WITHOUT REVIEW

THIS REVIEW IS ONLY FOR GENERAL CONFORMANCE WITH THE DESIGN CONCEPT OF THE PROJECT AND GENERAL COMPLIANCE WITH THE INFORMATION GIVEN IN THE CONTRACT DOCUMENTS. ANY ACTION, CORRECTIONS OR COMMENTS SHOWN AND/OR NOTED ARE SUBJECT TO THE REQUIREMENTS OF THE CONTRACT DOCUMENTS. CONTRACTOR IS RESPONSIBLE FOR: DETERMINING THE ACCURACY AND COMPLETENESS OF DETAILS, SUCH AS DIMENSIONS AND QUANTITIES; SUBSTANTIATING INSTRUCTIONS FOR INSTALLATION OR PERFORMANCE OF EQUIPMENT OR SYSTEMS; THE MEANS, METHODS, TECHNIQUES, SEQUENCES AND PROCEDURES OF CONSTRUCTION, INCLUDING SAFETY PRECAUTIONS AND PROCEDURES; AND THE SELECTION OF FABRICATION PROCESSES. ENGINEER'S APPROVAL OF A SPECIFIC ITEM SHALL NOT INDICATE APPROVAL OF AN ASSEMBLY OF WHICH THE ITEM IS A COMPONENT. FURTHER, ENGINEER'S REVIEW OF CONTRACTOR'S SUBMITTALS SHALL NOT RELIEVE THE CONTRACTOR OF ITS OBLIGATIONS UNDER THE CONTRACT DOCUMENTS WITH RESPECT TO THE PREPARATION AND/OR APPROVAL OF SUCH SUBMITTALS

CLD CONSULTING ENGINEERS, INC.
540 COMMERCIAL ST.
MANCHESTER, NEW HAMPSHIRE 03101

BY NDC DATE: 1/12/15

STATE OF VERMONT
AGENCY OF TRANSPORTATION
BRIDGE NO.35
TOWN HIGHWAY 65 (PALMER ROAD)
CLASS 3 LOCAL ROAD
ITEM NO. 531.17
TOWN OF RANDOLPH

STATE	COUNTY	CONTROL NO.
VT	ORANGE	N/A

PROJ. NO.: BRO 1444(57)

DYNAMIC RUBBER.:
LAMINATED BEARING PADS

Cosmec
1501 ROCKY RIDGE ROAD
P.O. BOX 2159
ATHENS, TEXAS 75751

SCALE: NONE	DRAWN BY: RP DATE: 12/5/14	CHECKED BY: ELS DATE: 12/16/14
SHEET 1 OF 1	JOB NO.: 12849	
CUSTOMER: J.P. SICARD, INC.	DRAWING NUMBER 12849–D1	REV. 0

REV.	DESCRIPTION	BY	DATE	CK'D	DATE
0					