VERMONT

State of Vermont
PDD/Structures Design Section
National Life Building – Drawer 33
Montpelier, VT 05633-5001
www.aot.state.vt.us

[phone] 802-828-2621
[fax] 802-828-3566
[ttd] 800-253-0191

Agency of Transportation

January 30, 2015

J. P. Sicard, Inc.
PO Box 508
Barton, VT 05822

Project Name: Randolph BRO 1444(57)

Structure Identification: TH65 (Palmer Road) Bridge 35

The bridge and approach railing fabrication drawings associated with Items 525.335, Bridge Railing, Galvanized 3 Rail Box Beam and 621.725 Guardrail Approach Section, Galvanized 3 Rail Box Beam, has been reviewed and is being returned herewith.

All sheets are approved as noted.

Sincerely,

Todd A. Sumner P.E.
Project Manager

VTrans Working to Get You There
Vermont Agency of Transportation

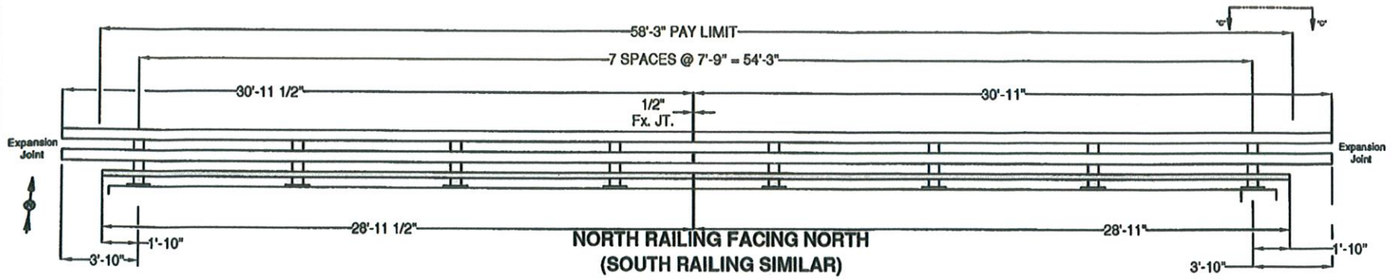

NORTH RAILING FACING NORTH
(SOUTH RAILING SIMILAR)

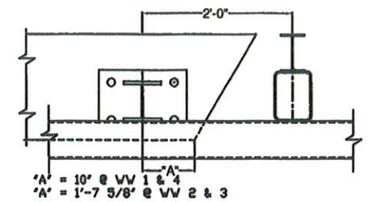

VIEW "C"-"C"

Vermont Agency of Transportation

RECEIVED
ON: January 22, 2015
and Checked for
CONFORMANCE
BY: T. A. Sumner DATE: 01/28/15

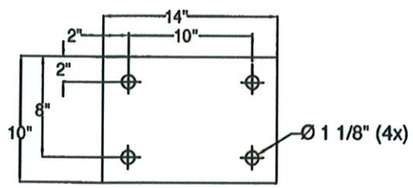

1/8" FABRIC PAD

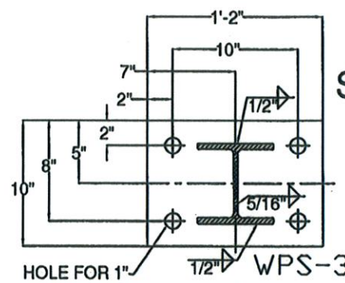

SECTION A-A

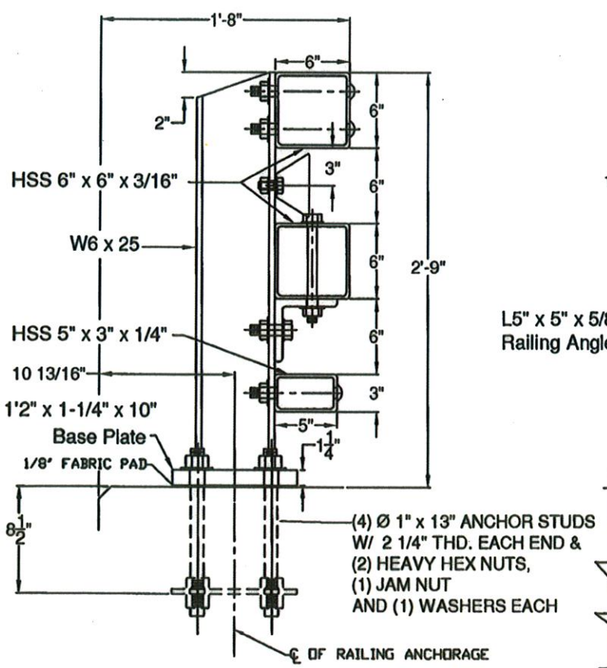

SECTION

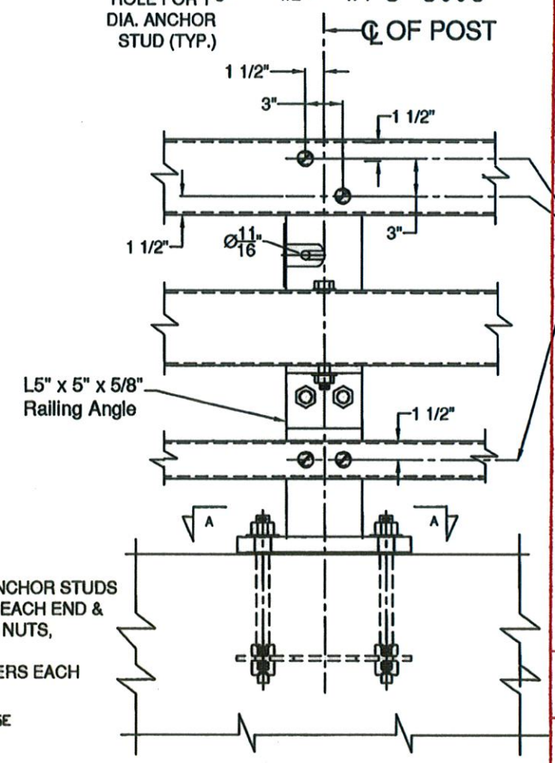

ELEVATION

STEEL BRIDGE RAILING

SHOP DRAWING REVIEW
REVIEW IS ONLY FOR GENERAL CONFORMANCE WITH DESIGN CONCEPT
- ☐ PROVIDE AS SUBMITTED
- ☒ PROVIDE AS CORRECTED
- ☐ REVISE AND RESUBMIT
- ☐ REJECTED - SEE REMARKS
- ☐ SUBMITTAL NOT REQUIRED - RETURNED WITHOUT REVIEW

THIS REVIEW IS ONLY FOR GENERAL CONFORMANCE WITH THE DESIGN CONCEPT OF THE PROJECT AND GENERAL COMPLIANCE WITH THE INFORMATION GIVEN IN THE CONTRACT DOCUMENTS. ANY ACTION, CORRECTIONS OR COMMENTS SHOWN AND/OR NOTED ARE SUBJECT TO THE REQUIREMENTS OF THE CONTRACT DOCUMENTS. CONTRACTOR IS RESPONSIBLE FOR: DETERMINING THE ACCURACY AND COMPLETENESS OF DETAILS, SUCH AS DIMENSIONS AND QUANTITIES; SUBSTANTIATING INSTRUCTIONS FOR INSTALLATION OR PERFORMANCE OF EQUIPMENT OR SYSTEMS; THE MEANS, METHODS, TECHNIQUES, SEQUENCES AND PROCEDURES OF CONSTRUCTION, INCLUDING SAFETY PRECAUTIONS AND PROCEDURES; AND THE SELECTION OF FABRICATION PROCESSES. ENGINEER'S APPROVAL OF A SPECIFIC ITEM SHALL NOT INDICATE APPROVAL OF AN ASSEMBLY OF WHICH THE ITEM IS A COMPONENT. FURTHER, ENGINEER'S REVIEW OF CONTRACTOR'S SUBMITTALS SHALL NOT RELIEVE THE CONTRACTOR OF ITS OBLIGATIONS UNDER THE CONTRACT DOCUMENTS WITH RESPECT TO THE PREPARATION AND/OR APPROVAL OF SUCH SUBMITTALS

CLD CONSULTING ENGINEERS, INC.
540 COMMERCIAL ST.
MANCHESTER, NEW HAMPSHIRE 03101

BY: NDC DATE: 1/23/15

BILL OF MATERIAL

ITEM #	QTY	PART #	DESCRIPTION	ASTM DESIGNATION
1	16	0033.03610	W6x25, THREE RAIL POST @ 2'-9" OA ON 1 1/4x10x1'-2" B.P.	A572 Gr. 50
2	2	0033.91321	HSS 3" X 5" X 1/4" RAIL @ 28'-11 1/2"	A500 Gr. B
3	2	0033.91322	HSS 3" X 5" X 1/4" RAIL @ 28'-11"	A500 Gr. B
5	4	0033.91323	HSS 6" X 6" X 3/16" RAIL @ 30'-11 1/2"	A500 Gr. B
6	4	0033.91324	HSS 6" X 6" X 3/16" RAIL @ 30'-11"	A500 Gr. B
8	2	0033.00840	2-1/8" X 4-1/4" FIX. SPLICE BAR @ 2'-3"	A572 Gr. 50
9	4	0033.00640	HSS 5" X 5" X 5/16" FIX. SPLICE TUBE @ 2'-3"	A500 Gr. B, A572 Gr. 50
10	16	0033.00220	3/8" X 10" X 14" ANCHOR PLATES	A572 Gr. 50
11	16	0033.90050	1/8" X 10" X 14" FABRIC PAD	AASHTO M251
12	66*	0042.21013	Ø 1" X 13" ANCHOR STUDS, W/ 2 1/4" THD. EACH END	A449
13	130*	0080.18901	Ø 1" HEAVY HEX NUTS	A563
14	64	0080.18911	Ø 1" FLAT WASHERS	F436
15	64	0080.18905	Ø 1" HEX JAM NUTS	A563
16	64	0080.07500	Ø 7/8" X 8" ROUND HEAD BOLT, NUT, SQ. WASHER, L.W.	A449, A563, F436, ASME D18.2
17	16	0080.06400	Ø 3/4" X 8" HEX BOLT, NUT, (2) F.W., & L.W.	A325, A563, F436, & ASME D18.2
18	32	0080.06140	Ø 3/4" X 2-3/4" HEX BOLT, NUT, (2) F.W., & L.W.	A325, A563, F436, & ASME D18.2
19	16	0080.06340	Ø 3/4" X 7-1/2" HEX BOLT, NUT, & (2) F.W.	A325, A563, & F436
20	8	0080.06255	Ø 3/4" X 4-1/2" HEX BOLT, NUT, & (2) F.W.	A325, A563, & F436
21	16	0033.00500	L5" X 5" X 5/8" RAILING ANGLE @ 6"	A572 Gr. 50
22	6		DELINEATORS - NOT SHOWN	(SUPPLIED BY CUSTOMER)

*-2 EXTRA FOR VOAT TESTING

GENERAL NOTES:

1) ALL RAILING IS TO BE FABRICATED AND ERECTED ACCORDING TO SECTION 525 OF THE STANDARD SPECIFICATIONS.
2) PRIOR TO GALVANIZING THE ASSEMBLED POST, GRIND ALL EDGES TO A MINIMUM RADIUS OF 1/16".
3) ALL POST SHALL BE SET NORMAL TO GRADE. THE MAXIMUM CENTER TO CENTER SPACING OF BRIDGE RAIL POST IS 8' 3".
4) SECTIONS OF RAIL TUBE SHALL BE ATTACHED TO A MINIMUM OF TWO BRIDGE POSTS AND PREFERABLY TO AT LEAST 4 POSTS.
5) RAIL TUBE EXPANSION JOINTS SHALL BE PROVIDED IN ANY RAIL BAY SPANNING THE END OF AN INTEGRAL ABUTMENT BRIDGE AND AT ALL SUPER STRUCTURE EXPANSION JOINTS. EXPANSION JOINT WIDTH SHALL BE 4"@ 68°F AND WILL BE ADJUSTED IN THE FIELD BY THE ENGINEER FOR OTHER TEMPERATURES.
6) STD. SPLICE HOLES ONLY IN BRIDGE RAIL TUBES. REST TO BE DRILLED BY CUSTOMER. FIELD DRILLED HOLES TO BE COATED WITH AN APPROVED ZINC-RICH PAINT PRIOR TO INSTALLATION.
7) BOLTS SHALL BE TORQUED SNUG TIGHT (APPROXIMATELY 100 FT-LB).
8) SEE STANDARD DRAWING G-I FOR DETAILS OF DELINEATORS. A DELINEATOR SHALL BE INSTALLED AT 30 FOOT SPACING OR THE NEAREST POST. WHITE IS TO BE INSTALLED ON THE DRIVER'S RIGHT. FOR ONE WAY BRIDGES, YELLOW IS TO BE INSTALLED ON THE DRIVER'S LEFT. PAYMENT FOR DELINEATORS SHALL BE INCIDENTAL TO OTHER ITEMS.
9) ANY BENDING OF RAIL SHALL BE DONE AT THE FABRICATION PLANT ACCORDING TO A PROCEDURE PROVIDED BY THE FABRICATOR.
10) THE MINIMUM DISTANCE FROM THE POST TO AN EXPANSION JOINT SHALL BE DETERMINED BY THE MINIMUM EDGE DISTANCE OF 5" FROM ANY ANCHOR STUD TO THE END OF THE SLAB, OR THE EXPANSION JOINT RECESS POUR, IF ONE IS USED.
11) PROTRUSIONS CAUSED BY WELDING OR GALVANIZING ARE NOT PERMITTED ON THE ADJOINING SURFACES OF THE BOX BEAM RAILS, SPLICE TUBES AND FILL PLATES.
12) THIS RAILING MEETS THE REQUIREMENTS FOR A TL-4 SERVICE LEVEL.

ITEM #: 525.335

SHEET 1 OF 2

STRUCTURAL STEEL TO COMPLY W/ ASTM A6

TOLERANCE UNLESS OTHERWISE NOTED:
FRACTIONS = ± 1/16"
ANGLES = ± 1/2°
DIAMETERS = ± 1/32"

BRIDGE RAIL DETAILS SHEET

TOWN HIGHWAY 65 (PALMER ROAD), CLASS 3 LOCAL ROAD - BRIDGE # 35
TOWN OF RANDOLPH, COUNTY OF ORANGE, VT.

REV	NO.	DATE	DESCRIPTION	BY
	1	1/14/15	REVISED PER 1/13/15 MARK-UP	E.P.

DRAWN	E.P.	12/10/14
CHECKED	D.L.	12/11/14
APPROVED	.	.
SCALE	SCHEMATIC	
DRAWING NO.	F.R. LaFAYETTE-RANDOLPH	

ELDERLEE, INC.
OAKS CORNERS, NEW YORK 14518
E-Mail: dlong@elderlee.com, epeek@elderlee.com
Tel: 315-789-6670 Fax: 315-789-6615

AISC CERTIFIED FABRICATOR

SPLICE BAR - FIXED

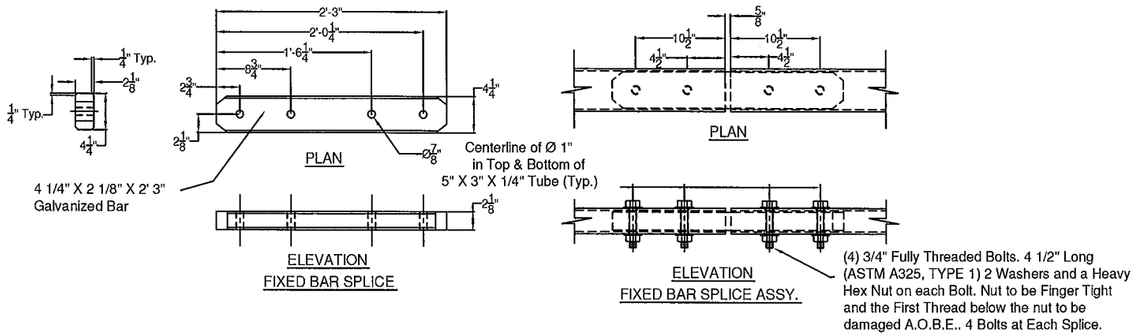

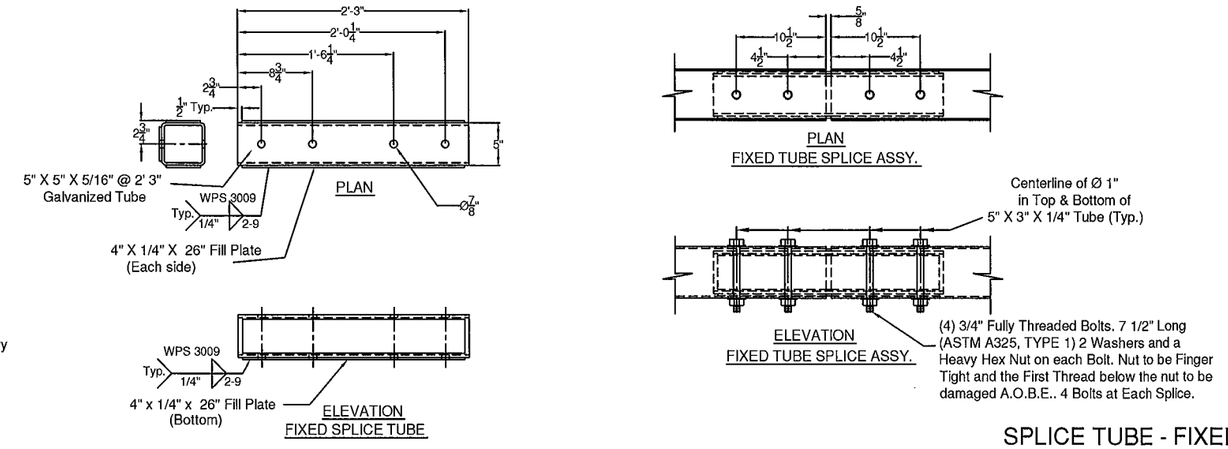

SPLICE TUBE - FIXED

Vermont Agency of Transportation

Randolph BRO Submittal 2 4th Submission- Bridge Railing 52

RECEIVED

ON: January 22, 2015

and Checked for

CONFORMANCE

BY: T. A. Sumner DATE: 01/28/15

BRIDGE POST DETAIL

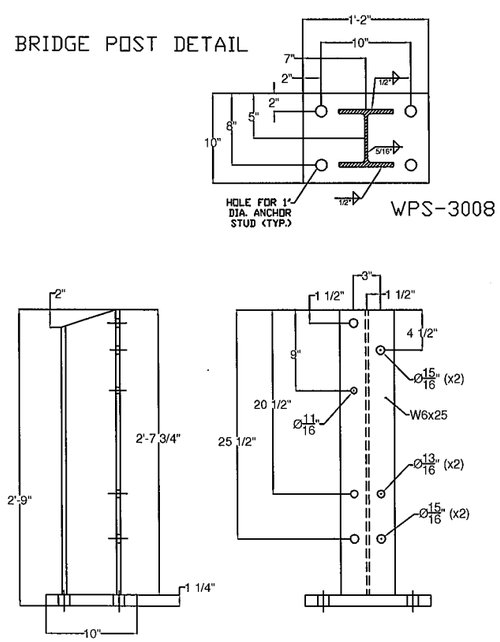

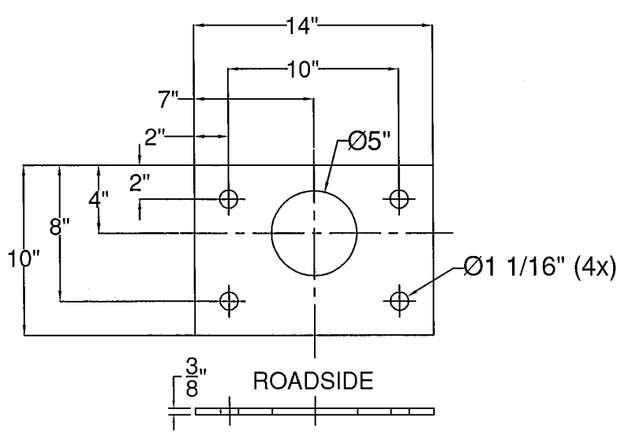

ANCHOR PLATE

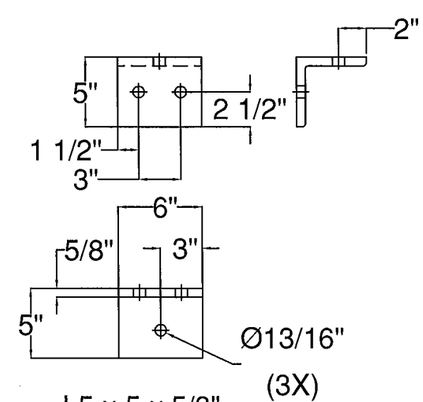

L5 x 5 x 5/8"
RAILING ANGLE

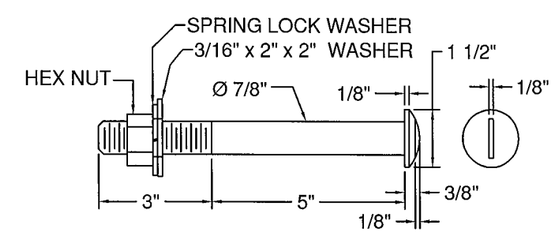

SLOTTED ROUND HEAD BOLT

ITEM #: 525.335

SHEET 2 OF 2

STRUCTURAL STEEL TO COMPLY W/ ASTM A6

TOLERANCE UNLESS OTHERWISE NOTED:
FRACTIONS = ± 1/16"
ANGLES = ± 1/2°
DIAMETERS = ± 1/32"

BRIDGE RAIL DETAILS SHEET

TOWN HIGHWAY 65 (PALMER ROAD), CLASS 3 LOCAL ROAD - BRIDGE # 35
TOWN OF RANDOLPH, COUNTY OF ORANGE, VT.

REV	NO.	DATE	DESCRIPTION	BY	REV	NO.	DATE	DESCRIPTION	BY
	1	1/14/15	REVISED PER 1/13/15 MARK-UP	E.P.					

ELDERLEE, INC.
OAKS CORNERS, NEW YORK 14518
E-Mail: dlong@elderlee.com, epeek@elderlee.com
Tel: 315-789-6670 Fax: 315-789-6615

AISC CERTIFIED FABRICATOR

DRAWN	E.P.	12/10/14
CHECKED	D.L.	12/11/14
APPROVED	.	.
SCALE	SCHEMATIC	
DRAWING NO.	F.R. LaFAYETTE-RANDOLPH	

WELDING PROCEDURE SPECIFICATION

PQR ELDERLEE#1

Material Specification	A572 GRD. 50 /A992-06a
Welding Process	FCAW
Manual or Machine	SEMAUTOMATIC
Position of Welding	FLAT/HORIZONTAL
Filler Metal Specification	A5.20
Filler Metal Classification	E70 LINCOLN OUTERSHEILD
Flux	N/A
Shielding Gas	CO 2 Dew Point -40DEG F Flow Rate 50 CFM (45 TO 63 CFM)
Single or Multiple Pass	SINGLE
Single or Multiple Arc	N/A
Welding Current	DC
Polarity	DCEP
Welding Progression	STRINGER
Root Treatment	PER D1.5
Preheat and Interpass Temperature	PER D1.5
Postheat Temperature	NONE
Heat Input	Min _____ Max _____

WELDING PROCEDURE

Pass no.	Electrode size	Welding Current Amperes	Welding Current Volts	Travel speed	Joint detail
1	3/32	390	27	12	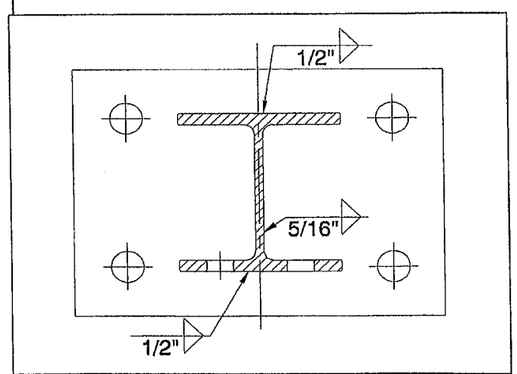
Variable	LIMITS	351 TO 429	25 TO 29	11 TO 13	

This procedure may vary due to fabrication sequence, fit-up, pass size, etc., within the limitation of variables given in Section 5.

Procedure No.	3008	Contractor	Elderlee, Inc.
Revision No.		Authorized By	RANDY SCOTT
		Date	5/29/2013

WELDING PROCEDURE SPECIFICATION

PQR ELDERLEE #3

Material Specification	A709 TO A500 GR B
Welding Process	FCAW-G
Manual or Machine	SEMAUTOMATIC
Position of Welding	FLAT/HORIZONTAL
Filler Metal Specification	A5.29
Filler Metal Classification	E81T1-Ni1C-JH4
Flux	N/A
Shielding Gas	CO 2 Dew Point -40DEG F Flow Rate 50CFH
Single or Multiple Pass	SINGLE
Single or Multiple Arc	SINGLE
Welding Current	DC
Polarity	REVERSE ELECTRODE POSITIVE
Welding Progression	STRINGER
Root Treatment	D1.5
Preheat and Interpass Temperature	D1.5
Postheat Temperature	NONE
Heat Input	Min Max

WELDING PROCEDURE

Pass no.	Electrode size	Welding Current Amperes	Welding Current Volts	Travel speed	Joint detail
1	1/16	310	25	11	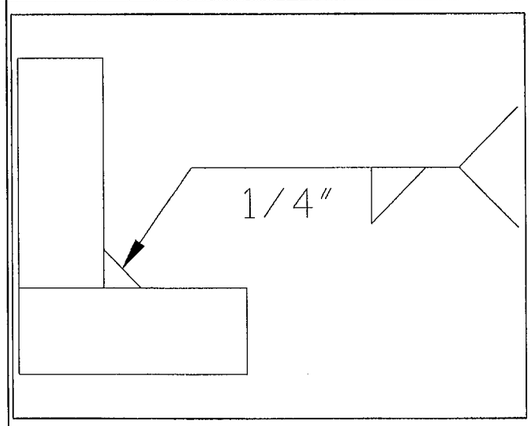
Variable	LIMITS	341 TO 269	27 TO 23	12 TO 10	

This procedure may vary due to fabrication sequence, fit-up, pass size, etc., within the limitation of variables given in Section 5.

Procedure No. 3009

Revision No.

Contractor Elderlee, Inc.

Authorized By RANDY SCOTT

Date 3/20/2014

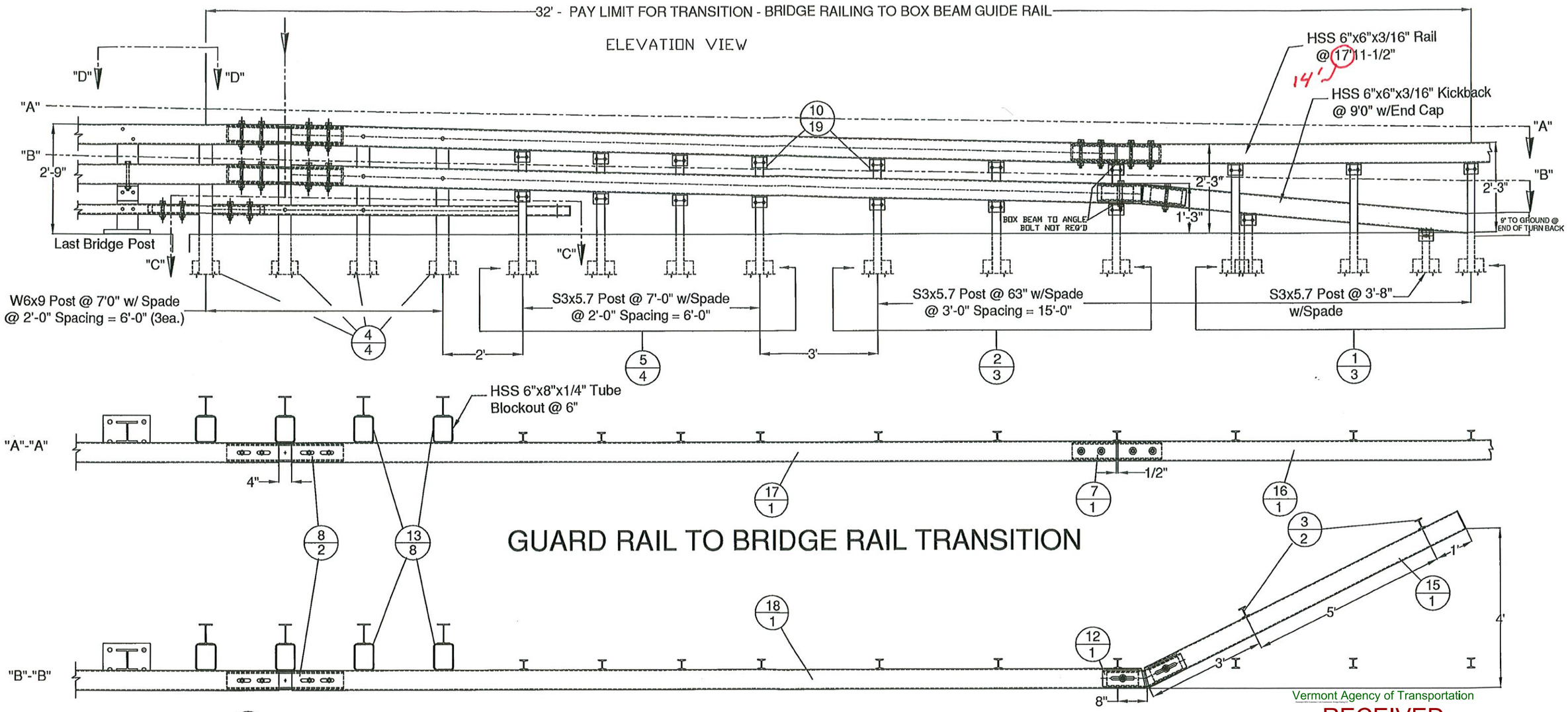

GUARD RAIL TO BRIDGE RAIL TRANSITION

Vermont Agency of Transportation
RECEIVED
ON: January 22, 2015
and Checked for
CONFORMANCE
BY: T. A. Sumner DATE: 01/28/15

SHEET 1 OF 5

ITEM #: 621.725

STRUCTURAL STEEL TO COMPLY W/ ASTM A6

TOLERANCE UNLESS OTHERWISE NOTED:
FRACTIONS = ± 1/16"
ANGLES = ± 1/2°
DIAMETERS = ± 1/32"

GUARD RAIL TO BRIDGE RAIL TRANSITION DETAILS SHEET

TOWN HIGHWAY 65 (PALMER ROAD), CLASS 3 LOCAL ROAD - BRIDGE # 35
PROJECT: BRO 1444(57), TOWN OF RANDOLPH, COUNTY OF ORANGE, VT.

REV	NO.	DATE	DESCRIPTION	BY	REV	NO.	DATE	DESCRIPTION	BY

ELDERLEE, INC.
OAKS CORNERS, NEW YORK 14518
E-Mail: dlong@elderlee.com / epeek@elderlee.com
Tel: 315-789-6670 Fax: 315-789-6615

CERTIFIED FABRICATOR

DRAWN	E.P.	12/12/14
CHECKED	D.L.	12/15/14
APPROVED		
SCALE	SCHEMATIC	
DRAWING NO.	F.R.L.-RANDOLPH-T	

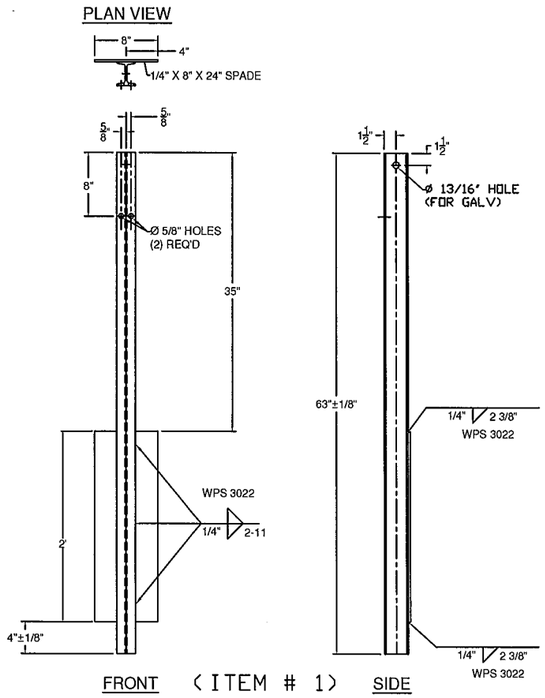

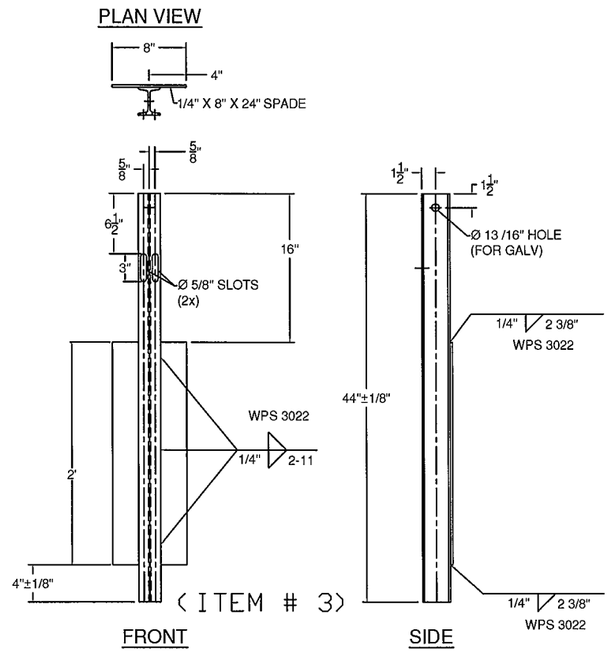

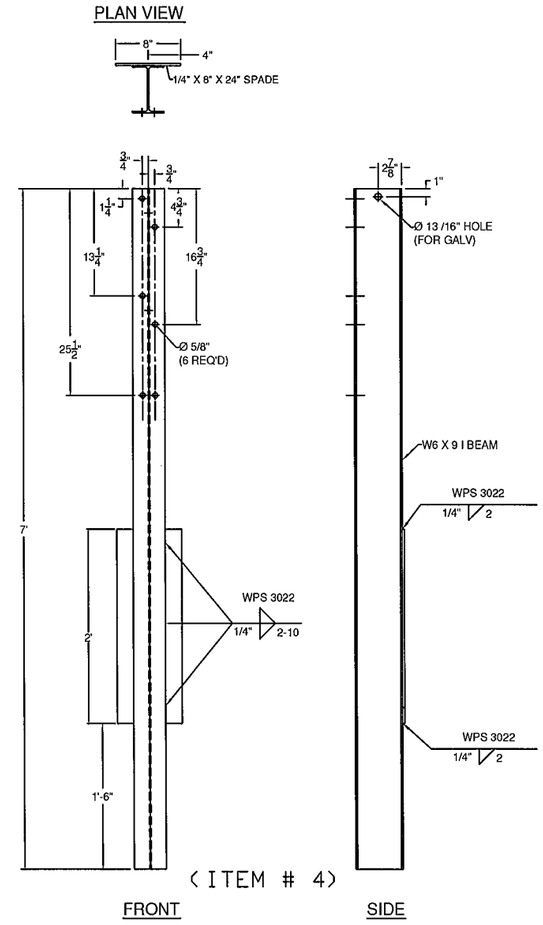

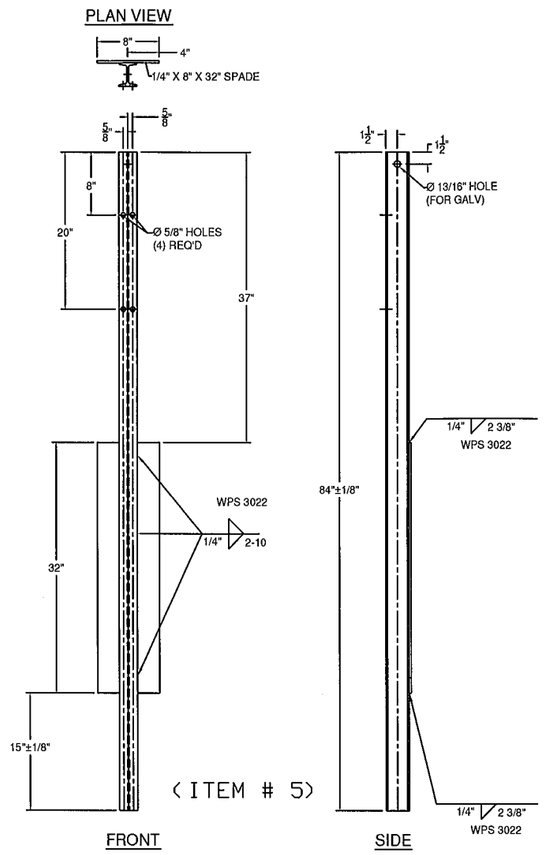

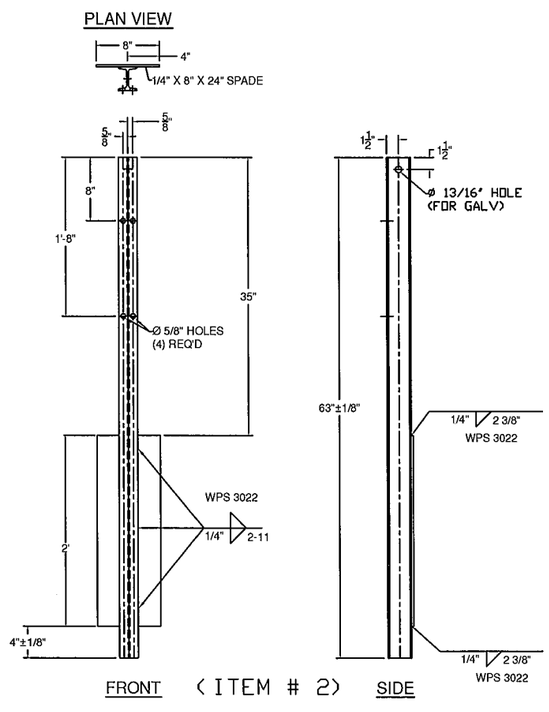

GENERAL NOTES:

1) ALL RAILING IS TO BE FABRICATED AND ERECTED ACCORDING TO SECTION 525 OF THE STANDARD SPECIFICATIONS.
2) BOLTS SHALL BE TORQUED SNUG TIGHT (APPROXIMATELY 100 FT-LB).
3) PROTRUSIONS CAUSED BY WELDING OR GALVANIZING ARE NOT PERMITTED ON THE ADJOINING SURFACES OF THE BOX BEAM RAILS, SPLICE TUBES AND FILL PLATES.
4) BOX BEAM TUBE AND STEEL POST MATERIALS, DIMENSION SIZES AND NOTES SHALL BE THE SAME AS THOSE OF THE BRIDGE RAIL, UNLESS OTHERWISE NOTED.
5) ANY BENDING OF RAIL SHALL BE DONE AT THE FABRICATION PLANT. RADII GREATER THAN 16' TO BE CURVED ON A TUBE BENDING MACHINE, RADII LESS THAN 16' TO BE "PIE CUT" AND WELDED. CURVED RAILING WIIL HAVE AN 18" LENGTH ON EACH END STRAIGHT TO ACCOMADATE SPLICES. "PIE CUTS ARE LOCATED SO AS TO NOT CONFLICT WITH POST FASTENING HOLES. PIE CUTS WILL BE WELDED ACCORDING TO PROCEDURE WPS-3026.

BILL OF MATERIALS (EACH CORNER)

ITEM #	QTY.	COMPONENT #	DESCRIPTION	MATERIAL (ASTM)
1	3	0013.57021	3' I-POST, PUNCH 8' W/SPD @ 63' LG	ASTM A572 Gr. 50
2	3	0013.57025	3' I-POST, PUNCH 8', & 20' W/SPD @ 63' LG	ASTM A572 Gr. 50
3	2	0013.57060	3' I-END POST W/SPD @ 3'-8' LG	ASTM A572 Gr. 50
4	4	0013.09001	W6X9 POST @ 7' W/SPD & 5/8' HOLES	ASTM A572 Gr. 50
5	4	0013.57010	3' I-POST, PUNCH 8' & 20', W/8X32' SPADE @7'	ASTM A572 Gr. 50
6	1	0033.80403	3X5' BTM TRANS RAIL W/5'-0' KB, EXP END	A500 Gr. B
7	1	0033.00640	HSS 5X5 TUBE SPLICE @27' LG W/ 1/4' SHIMS	A500 Gr. B / A572 Gr 50
8	2	0033.00730	HSS 5x5 EXP TUBE SPLICE @ 36' LG W/ 1/4' SHIMS	A500 Gr. B / A572 Gr 50
9	1	0033.00930	BR EXP BAR SPLICE 2-1/8' X 4-1/4' @ 36' LG	ASTM A572 Gr. 50
10	19	0054.00050	REG BB SHELF ANGLES @ 4-1/2'	ASTM A36
12	1	0054.00074	HSS 5X5 DBL BEND TUBE SPL @ 27' LG,	A500 Gr. B / A572 Gr 50
13	8	0054.00563	6X8' TRANS. TUBE B/□ @ 6' LG	A500 Gr. B
14	3	0054.00565	6X8' TRANS. TUBE B/□ @ 3' LG	A500 Gr. B
15	1	0054.09000	6X6' BB @ 9'-0' KICKBACK, W/ CAP, & 13° MITER	A500 Gr. B / A36
*16	0.5	0054.18000	6X6' BB @ 14'-11 1/2', DRILL 3' CC	A500 Gr. B
*17	1	0054.90092	6X6' BB TOP TRANS @ 20'-9 5/8' LG W/EXP END	A500 Gr. B
*18	1	0054.90093	6X6' BB BTM TRANS @ 21'-4 5/8' LG W/EXP END	A500 Gr. B
19	18	0080.03355	3/8' X 7 1/2' BOLT, NUT, & 2 FW	A307, A563, F436
20	19	0080.04100	1/2' x 1-1/2' BOLT, NUT, & FW	A307, A563, F436
21	22	0080.04120	1/2' x 1-1/2' BOLT, NUT, 2 FW & LW	A307, A563, F436
22	4	0080.06255	3/4' X 4-1/2' BOLT, NUT, 2 FW	A325, A563, F436
23	12	0080.06340	3/4' X 7-1/2' BOLT, NUT, 2 FW	A325, A563, F436
24	6	0080.06370	3/4' X 8' CARR BOLT, NUT, FW & LW	A307, A563, F436
25	2	0080.06400	3/4' X 8' BOLT, NUT, 2 FW, & LW	A325, A563, F436

* WW3 - ITEMS 16, 17, & 18 - FACE OF RAIL TO HAVE 110' CONCAVE RADIUS
* WW4 - ITEMS 16, 17, & 18 - FACE OF RAIL TO HAVE 50' CONVEX RADIUS

HARDWARE NOTES

ITEM #	FUNCTION
19	BOLT RAIL TO SHELF ANGLE (ITEM #10)
20	BOLT SHELF ANGLE (ITEM #'S 10 & 11) TO POST
21	BOLT BLOCK-OUTS (ITEM #'S 13 & 14) TO HEAVY POST
22	(4) PER SPLICE BAR (ITEM #9)
23	(4) PER SPLICE TUBING (ITEM #'S 7 & 8)
24	BOLT RAIL (ITEMS #'S 6,17, & 18 TO BLOCK-OUTS (ITEM #'S 13 & 14) [WHERE FASTENED]
25	BOLT DOUBLE BEND SPLICE TUBE (ITEM #12) TO RAIL (ITEM #18) & KICKBACK (ITEM #15)

Vermont Agency of Transportation
RECEIVED
ON: January 22, 2015
and Checked for
CONFORMANCE
BY: T. A. Sumner DATE: 01/28/15

ITEM #: 621.725

SHEET 2 OF 5

STRUCTURAL STEEL TO COMPLY W/ ASTM A6

TOLERANCE UNLESS OTHERWISE NOTED:
FRACTIONS = ± 1/16"
ANGLES = ± 1/2°
DIAMETERS = ± 1/32"

GUARD RAIL TO BRIDGE RAIL TRANSITION DETAILS SHEET

TOWN HIGHWAY 65 (PALMER ROAD), CLASS 3 LOCAL ROAD - BRIDGE # 35
PROJECT: BRO 1444(57), TOWN OF RANDOLPH, COUNTY OF ORANGE, VT.

REV	NO.	DATE	DESCRIPTION	BY	REV	NO.	DATE	DESCRIPTION	BY

ELDERLEE, INC.
OAKS CORNERS, NEW YORK 14518
E-Mail: dlong@elderlee.com / epeek@elderlee.com
Tel: 315-789-6670 Fax: 315-789-6615

AISC CERTIFIED FABRICATOR

DRAWN	E.P.	12/12/14
CHECKED	D.L.	12/15/14
APPROVED	.	.
SCALE	SCHEMATIC	
DRAWING NO.	F.R.L.-RANDOLPH-T	

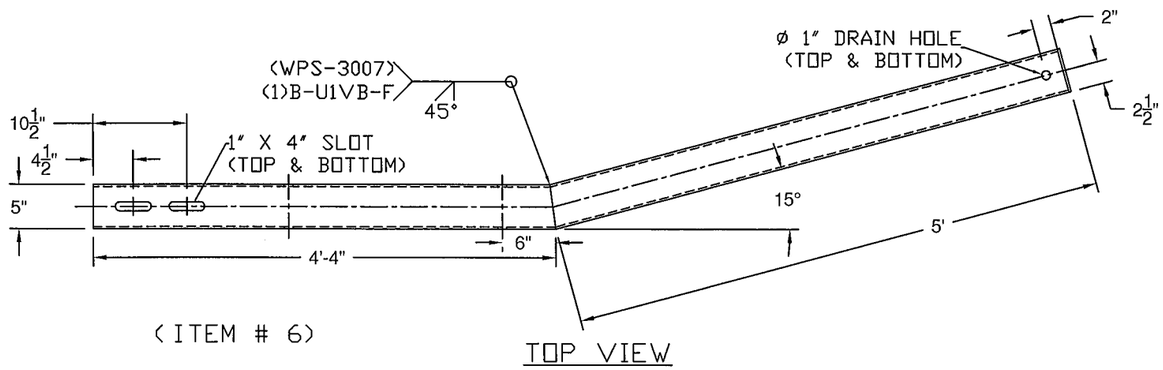

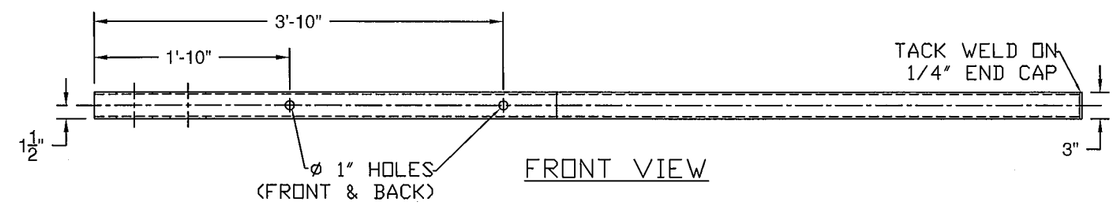

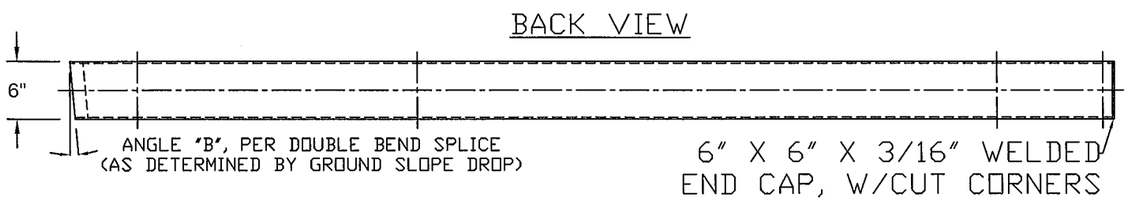

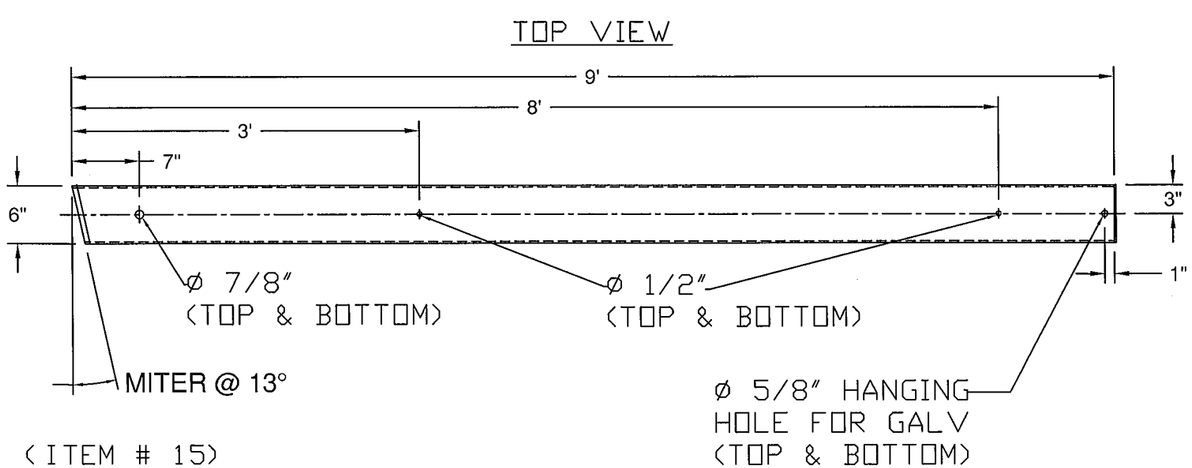

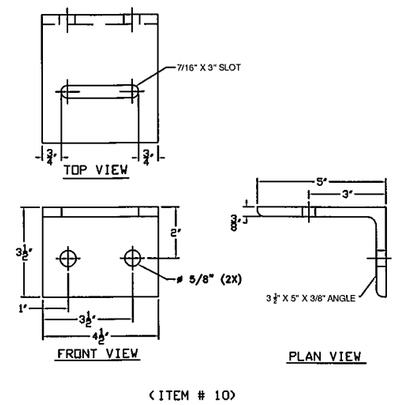

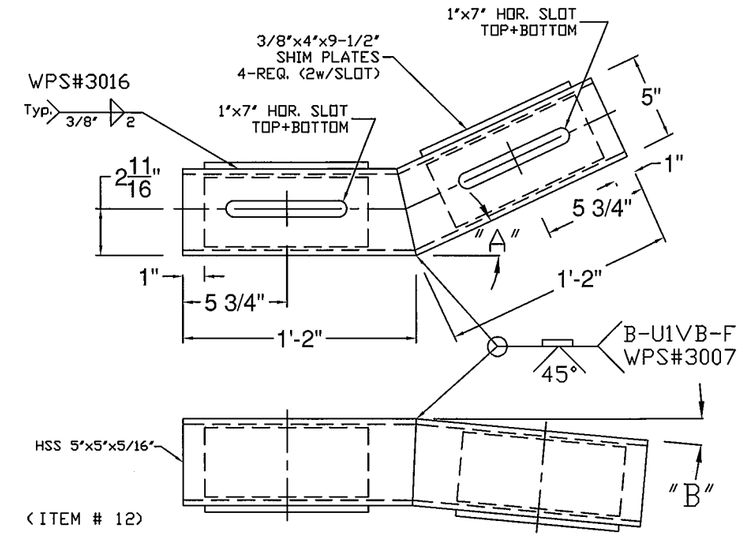

"A" - 26°
"B" - TURN DOWN ANGLE SET BY THE 9" MEASURMENT AT THE END OF THE BOX BEAM.

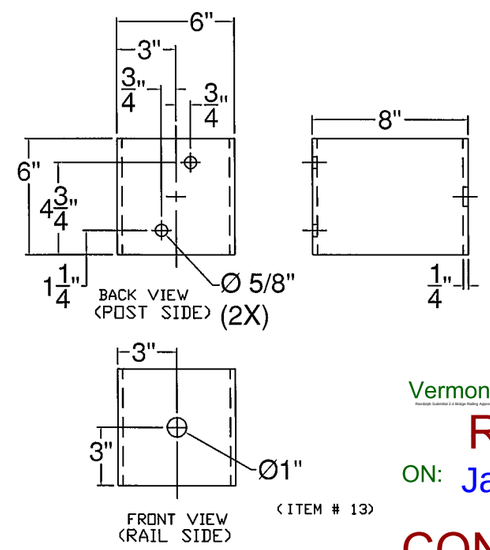

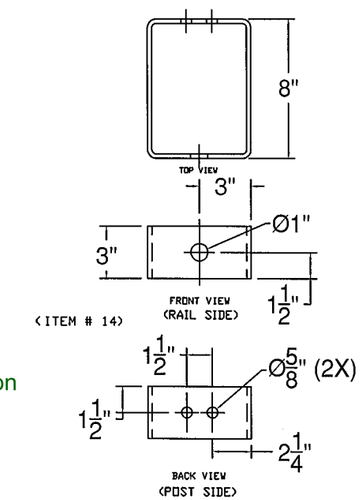

Vermont Agency of Transportation
RECEIVED
ON: January 22, 2015
and Checked for
CONFORMANCE
BY: T. A. Sumner DATE: 01/28/15

ITEM #: 621.725

SHEET 3 OF 5

STRUCTURAL STEEL TO COMPLY W/ ASTM A6

TOLERANCE UNLESS OTHERWISE NOTED:
FRACTIONS = ± 1/16"
ANGLES = ± 1/2°
DIAMETERS = ± 1/32"

GUARD RAIL TO BRIDGE RAIL TRANSITION DETAILS SHEET

TOWN HIGHWAY 65 (PALMER ROAD), CLASS 3 LOCAL ROAD - BRIDGE # 35
PROJECT: BRO 1444(57), TOWN OF RANDOLPH, COUNTY OF ORANGE, VT.

REV	NO.	DATE	DESCRIPTION	BY	REV	NO.	DATE	DESCRIPTION	BY

ELDERLEE, INC.
OAKS CORNERS, NEW YORK 14518
E-Mail: dlong@elderlee.com / epeek@elderlee.com
Tel: 315-789-6670 Fax: 315-789-6615

AISC CERTIFIED FABRICATOR

DRAWN	E.P.	12/12/14
CHECKED	D.L.	12/15/14
APPROVED	.	.
SCALE	SCHEMATIC	
DRAWING NO.	F.R.L.-RANDOLPH-T	

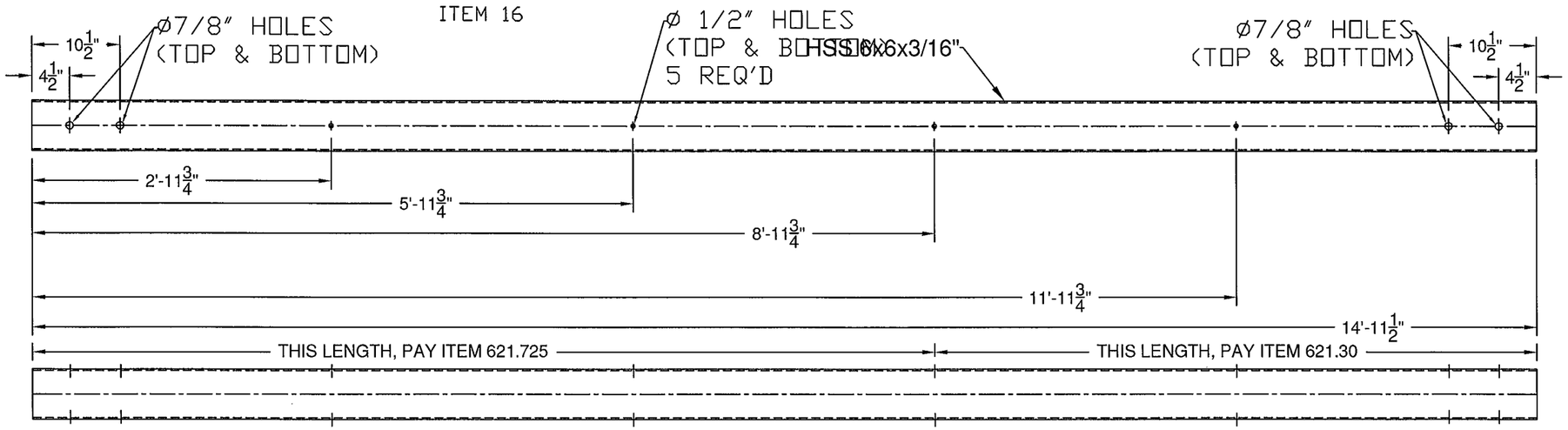

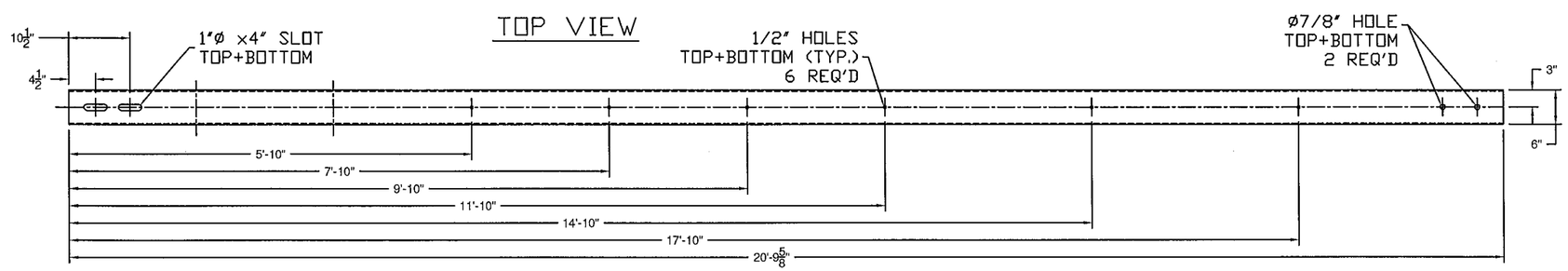

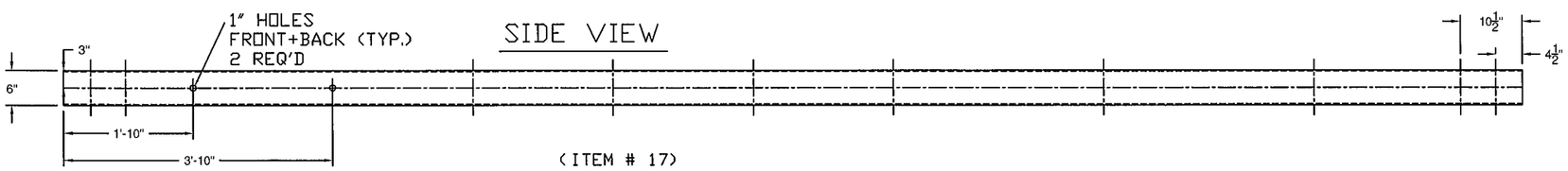

(ITEM # 17)

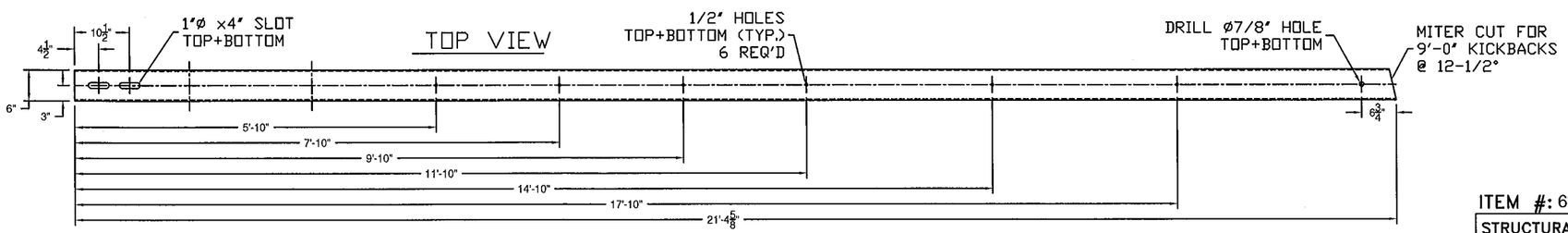

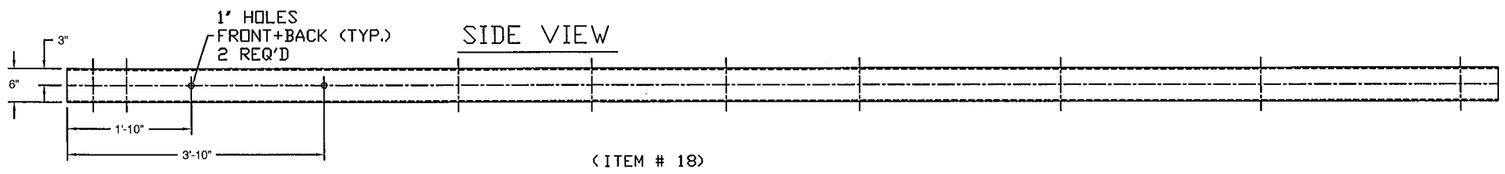

(ITEM # 18)

Vermont Agency of Transportation

RECEIVED

ON: January 22, 2015

and Checked for

CONFORMANCE

BY: T. A. Sumner DATE: 01/28/15

ITEM #: 621.725

SHEET 4 OF 5

STRUCTURAL STEEL TO COMPLY W/ ASTM A6

TOLERANCE UNLESS OTHERWISE NOTED:
FRACTIONS = ± 1/16"
ANGLES = ± 1/2°
DIAMETERS = ± 1/32"

GUARD RAIL TO BRIDGE RAIL TRANSITION DETAILS SHEET

TOWN HIGHWAY 65 (PALMER ROAD), CLASS 3 LOCAL ROAD - BRIDGE # 35
PROJECT: BRO 1444(57), TOWN OF RANDOLPH, COUNTY OF ORANGE, VT.

REV	NO.	DATE	DESCRIPTION	BY	REV	NO.	DATE	DESCRIPTION	BY

ELDERLEE, INC.
OAKS CORNERS, NEW YORK 14518
E-Mail: dlong@elderlee.com / epeek@elderlee.com
Tel: 315-789-6670 Fax: 315-789-6615

AISC CERTIFIED FABRICATOR

DRAWN	E.P.	12/12/14
CHECKED	D.L.	12/15/14
APPROVED	.	.
SCALE	SCHEMATIC	
DRAWING NO.	F.R.L.-RANDOLPH-T	

SPLICE BAR - EXPANSION

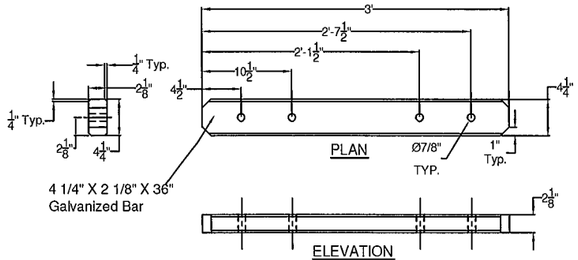

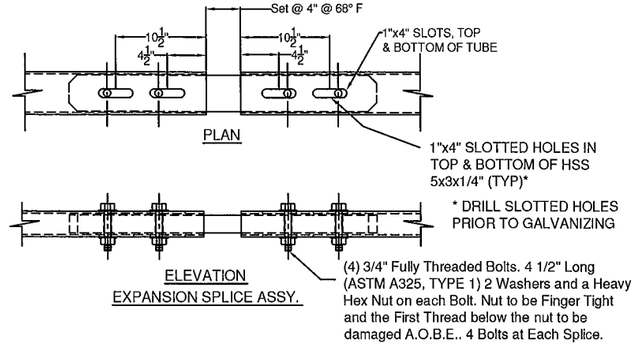

(ITEM # 9)

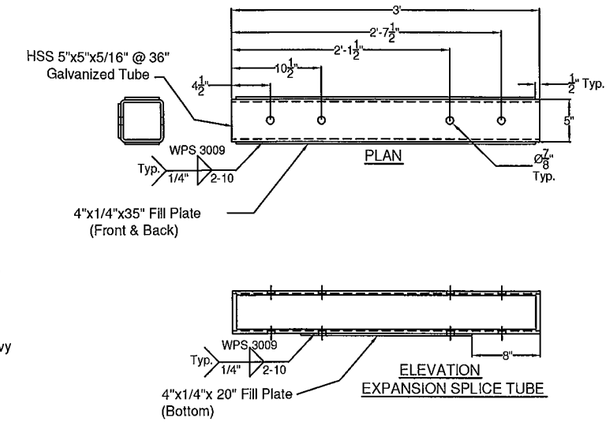

SPLICE TUBE - EXPANSION

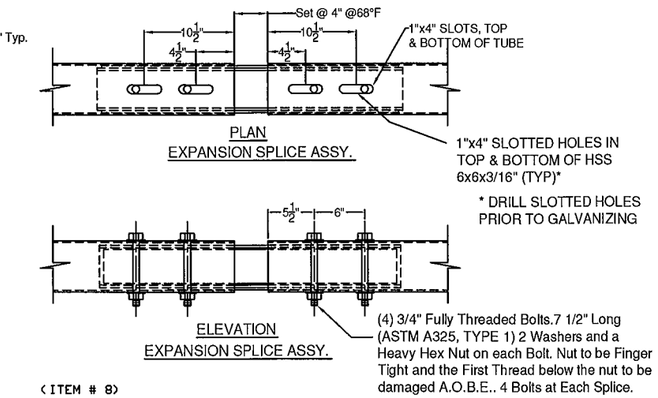

(ITEM # 8)

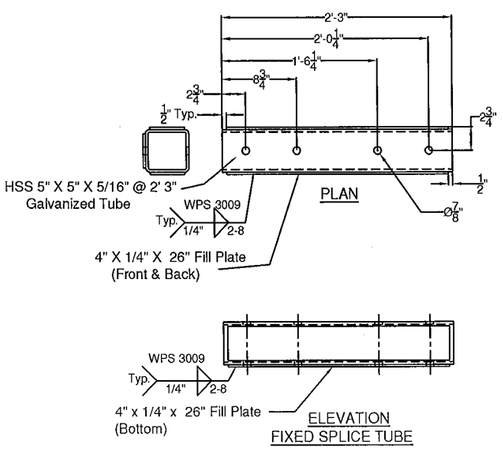

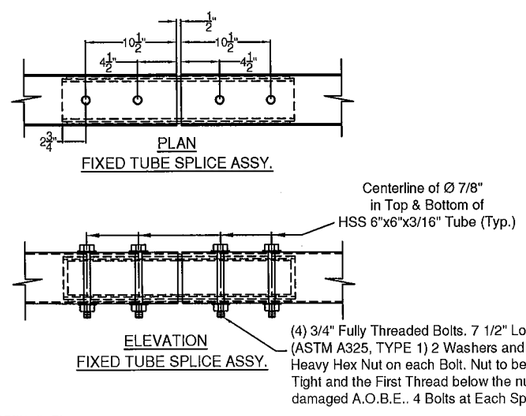

(ITEM # 7)

SPLICE TUBE - FIXED

Vermont Agency of Transportation

RECEIVED

ON: January 22, 2015

and Checked for

CONFORMANCE

BY: T. A. Sumner DATE: 01/28/15

ITEM #: 621.725

SHEET 5 OF 5

STRUCTURAL STEEL TO COMPLY W/ ASTM A6

TOLERANCE UNLESS OTHERWISE NOTED:
FRACTIONS = ± 1/16"
ANGLES = ± 1/2°
DIAMETERS = ± 1/32"

GUARD RAIL TO BRIDGE RAIL TRANSITION DETAILS SHEET

TOWN HIGHWAY 65 (PALMER ROAD), CLASS 3 LOCAL ROAD - BRIDGE # 35
PROJECT: BRO 1444(57), TOWN OF RANDOLPH, COUNTY OF ORANGE, VT.

REV	NO.	DATE	DESCRIPTION	BY	REV	NO.	DATE	DESCRIPTION	BY

ELDERLEE, INC.
OAKS CORNERS, NEW YORK 14518
E-Mail: dlong@elderlee.com / epeek@elderlee.com
Tel: 315-789-6670 Fax: 315-789-6615

CERTIFIED FABRICATOR

DRAWN	E.P.	12/12/14
CHECKED	D.L.	12/15/14
APPROVED	.	.
SCALE	SCHEMATIC	
DRAWING NO.	F.R.L.-RANDOLPH-T	

WELDING PROCEDURE SPECIFICATION

PQR ELDERLEE#3

Material Specification	A500 GR B to A572 GR 50
Welding Process	FCAW-G
Manual or Machine	SEMAUTOMATIC
Position of Welding	FLAT/HORIZONTAL
Filler Metal Specification	A5.29
Filler Metal Classification	E81T1-Ni1C-JH4
Flux	N/A
Shielding Gas	CO 2 Dew Point -40DEG F Flow Rate 50CFH
Single or Multiple Pass	SINGLE
Single or Multiple Arc	SINGLE
Welding Current	DC
Polarity	REVERSE ELECTRODE POSITIVE
Welding Progression	STRINGER
Root Treatment	PER D1.5
Preheat and Interpass Temperature	PER D1.5
Postheat Temperature	NONE
Heat Input	Min _____ Max _____

WELDING PROCEDURE

Pass no.	Electrode size	Welding Current Amperes	Welding Current Volts	Travel speed	Joint detail
1	1/16	310	25	11	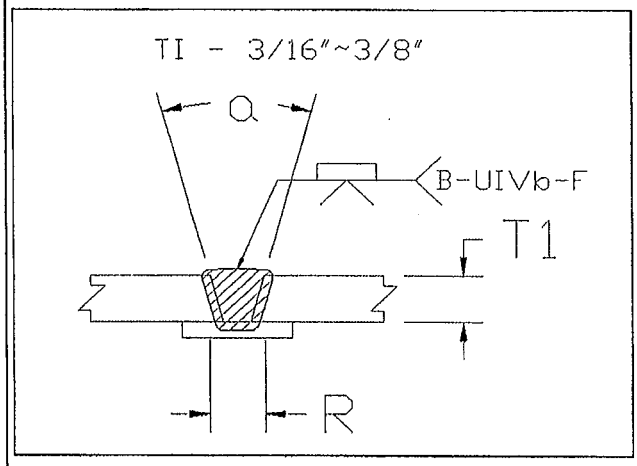
Variable	LIMITS	341 TO 269	27 TO 23	12 TO 10	

This procedure may vary due to fabrication sequence, fit-up, pass size, etc., within the limitation of variables given in Section 5.

Procedure No. 3007

Revision No. _____

Contractor Elderlee, Inc.

Authorized By RANDY SCOTT

Date 7/28/2014

WELDING PROCEDURE SPECIFICATION

PQR ELDERLEE #3

Material Specification	A709 TO A500 GR B
Welding Process	FCAW-G
Manual or Machine	SEMAUTOMATIC
Position of Welding	FLAT/HORIZONTAL
Filler Metal Specification	A5.29
Filler Metal Classification	E81T1-Ni1C-JH4
Flux	N/A
Shielding Gas	CO 2 Dew Point -40DEG F Flow Rate 50CFH
Single or Multiple Pass	SINGLE
Single or Multiple Arc	SINGLE
Welding Current	DC
Polarity	REVERSE ELECTRODE POSITIVE
Welding Progression	STRINGER
Root Treatment	D1.5
Preheat and Interpass Temperature	D1.5
Postheat Temperature	NONE
Heat Input	Min Max

WELDING PROCEDURE.

Pass no.	Electrode size	Welding Current Amperes	Welding Current Volts	Travel speed	Joint detail
1	1/16	310	25	11	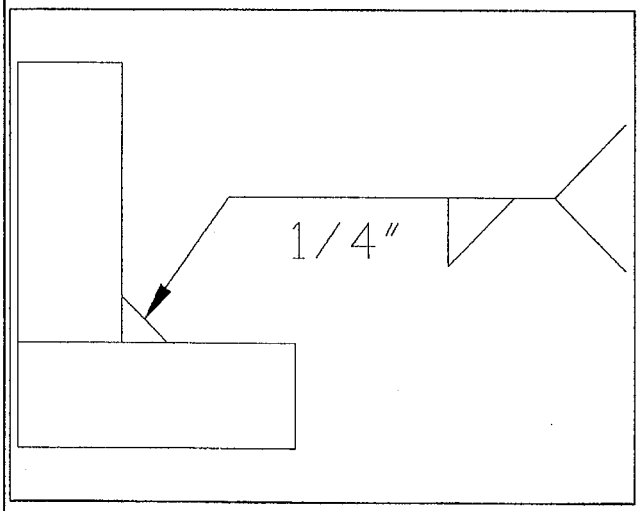
Variable	LIMITS	341 TO 269	27 TO 23	12 TO 10	

This procedure may vary due to fabrication sequence, fit-up, pass size, etc., within the limitation of variables given in Section 5.

Procedure No. 3009

Revision No.

Contractor Elderlee, Inc.

Authorized By RANDY SCOTT

Date 3/20/2014

WELDING PROCEDURE SPECIFICATION

PQR ELDERLEE #3

Material Specification	A500 TO A572 GR 50
Welding Process	FCAW-G
Manual or Machine	SEMAUTOMATIC
Position of Welding	FLAT/HORIZONTAL
Filler Metal Specification	A5.29
Filler Metal Classification	E81T1-Ni1C-JH4
Flux	N/A
Shielding Gas	CO 2 Dew Point -40DEG F Flow Rate 50CFH
Single or Multiple Pass	SINGLE
Single or Multiple Arc	SINGLE
Welding Current	DC
Polarity	REVERSE
Welding Progression	STRINGER
Root Treatment	PER D1.5
Preheat and Interpass Temperature	PER D1.5
Postheat Temperature	NONE
Heat Input	Min _____ Max _____

WELDING PROCEDURE

Pass no.	Electrode size	Welding Current Amperes	Welding Current Volts	Travel speed	Joint detail
1	1/16	310	25	11	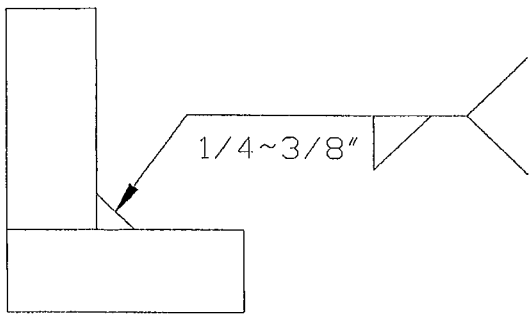
Variable	LIMITS	341 TO 269	27 TO 23	12 TO 10	

This procedure may vary due to fabrication sequence, fit-up, pass size, etc., within the limitation of variables given in Section 5.

Procedure No. 3016

Revision No. _____

Contractor Elderlee, Inc.

Authorized By RANDY SCOTT

Date 8/4/2014

WELDING PROCEDURE SPECIFICATION

Material Specification	A572 GR 50
Welding Process	GMAW
Manual or Machine	SEMIAUTOMATIC/ROBOTIC
Position of Welding	FLAT/HORIZONTAL
Filler Metal Specification	A5.18
Filler Metal Classification	L-56 LINCOLN
Flux	N/A
Shielding Gas	90% ARGON /10% CO2 Dew Point -40DEG F Flow Rate 45CFH
Single or Multiple Pass	SINGLE
Single or Multiple Arc	SINGLE
Welding Current	DC
Polarity	REVERSE
Welding Progression	STRINGER
Root Treatment	PER D1.5
Preheat and Interpass Temperature	PER D1.5
Postheat Temperature	NONE
Heat Input	Min _____ Max _____

WELDING PROCEDURE

Pass no.	Electrode size	Welding Current Amperes	Welding Current Volts	Travel speed	Joint detail
	.045	190	22	19	
Variable	LIMITS	171 TO 209	20 TO 24	17 TO 21	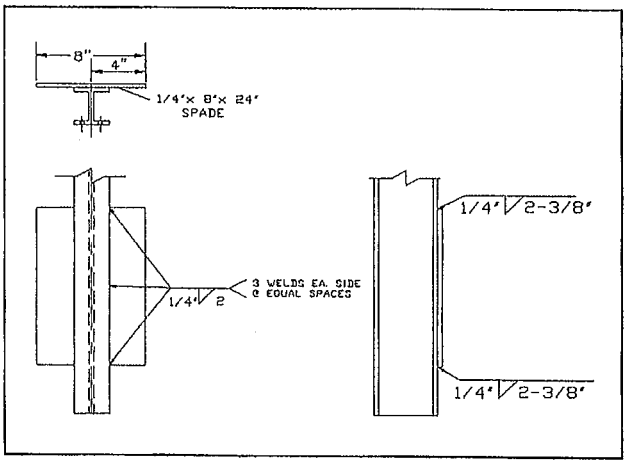

This procedure may vary due to fabrication sequence, fit-up, pass size, etc., within the limitation of variables given in Section 5.

Procedure No. 3022

Revision No. _____

Contractor Elderlee, Inc.

Authorized By RANDY SCOTT

Date 3/20/2014

6"x6"x3/16" Tube Prior to Miter Cut (Miter @ 13.5 Degrees)

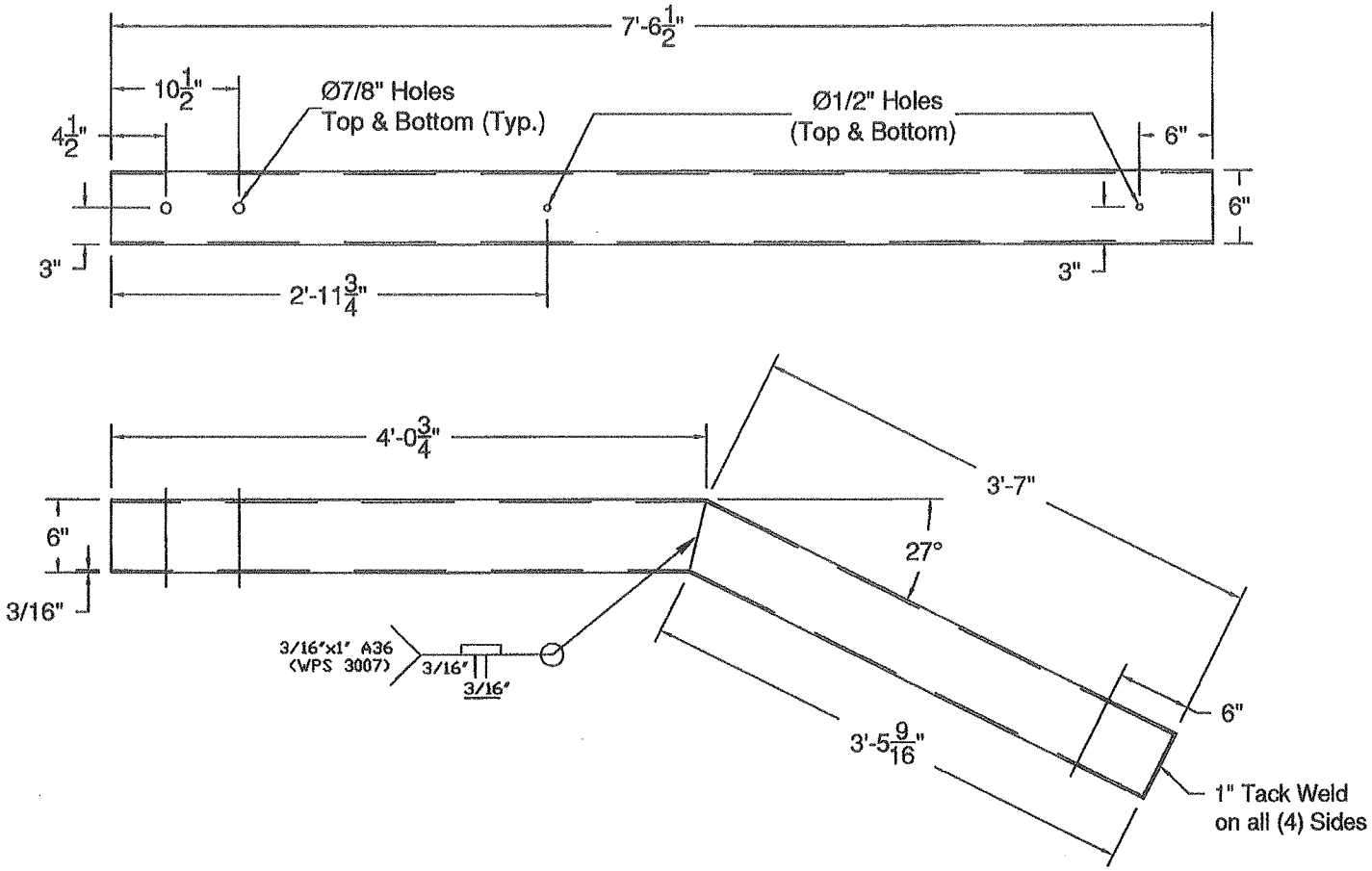

VAOT - Typical End Section (G1-b)			
QTY.	PART #	DESCRIPTION	MATERIAL (ASTM)
1		6" x 6" x 3/16" TUBE @ 7'6-1/2"	A500 Gr. B
2	0053.99001	3/16" x 1" x 5 1/8" BACKER	A36
2	0053.99002	3/16" x 1" x 5 1/8" BACKER, W/ 21° BEND	A36
1	0053.00061	6" x 6" END CAP W/ CUT CORNERS	A36/A709 CVN

MATERIAL: PER COMPONENT LIST
GALVANIZE: ASTM A123
WEIGHT (BLACK): 112 Lbs.

ELDERLEE, INC.
OAKS CORNERS, NEW YORK 14518
E-Mail: dlong@elderlee.com
Tel: 315-789-6670 Fax: 315-789-6615

REV	NO.	DATE	DESCRIPTION	BY	REV	NO.	DATE	DESCRIPTION	BY

STRUCTURAL STEEL TO COMPLY W/ ASTM A6

TOLERANCE UNLESS OTHERWISE NOTED:
FRACTIONS = ± 1/16"
ANGLES = ± 1/2°

ORTHOGRAPHIC PROJECTION

AISC ACTIVE MEMBER

DRAWN	D.L.	07/24/14
CHECKED	E.P.	07/24/14
APPROVED		

Typical 6"x6"x3/16" End Section (Vermont)

DRAWING NO. 0054.01001