PO Box 508
Barton, VT 05822
Phone: (802) 525-9506
Fax: (802) 525-4616
www.jpsicard.com

Submittal Data Sheet

Submittal #: 1

Submission #: 1

Date: 12/30/2014

Project Name: Randolph BRO (1444) Bridge Replacement

Owner: Town of Randolph, VT

Engineer: Vtrans

Contractor: J.P. Sicard Inc.

Item Number: 531.17

Supplier: Cosmec Inc.

Description of Item: Elastomeric Bearing Pad

Subsitution: NO

Engineers Review Comments:

Submitted By:	Brad Drake
Title:	Project Manager
Company:	JP Sicard Inc

COSMEC INC. / DYNAMIC RUBBER

P.O. Box 2159
1501 Rocky Ridge Road
Athens, TX 75751
TEL: 903.677.2871 FAX: 903.675.4776

TRANSMITTAL SHEET

TO: J.P. SICARD, INC.
ATTN: GEORGE CARPENTER george@jpsicard.com
CC: KERRY MARCHAND

DATE: 12/16/14
JOB: BRO 1444 (57), BRIDGE NO. 35
RE: SHOP DRAWING SUBMITTAL
DRP JOB NO: **12849** LOCATION: ORANGE CO., VT

WE TRANSMIT TO YOU UNDER SEPARATE COVER HERE WITH THE FOLLOWING DRAWINGS:

DWG NO	REV NO	NO EACH	DESCRIPTION	REMARKS	DWG NO	REV NO	NO EACH	DESCRIPTION	REMARKS
12849-D1	**0**	**1**	**SHOP DRAWING**						

COMMENTS: **THE ATTACHED SHOP DRAWINGS ARE SUBMITTED FOR APPROVAL. PLEASE FORWARD THIS PACKAGE TO THE ENGINEER FOR REVIEW AND ADVISE THE APPROVAL STATUS AS SOON AS POSSIBLE.**

THE ABOVE PRINTS ARE SUBMITTED TO YOU FOR:

	(XXX) Approval	( ) Final Approval	( ) Distribution
	( ) Field Use	( ) Fabrication	(XXX) E-MAIL
BY:	( ) Next Day Air	( ) Second Day Air	( ) Messenger
	( ) UPS	( ) First Class Mail	( ) Fax

Thank you

JENNIFER GARZA

COSMEC INC. / DYNAMIC RUBBER PRODUCTS

WWW.COSMECINC.COM

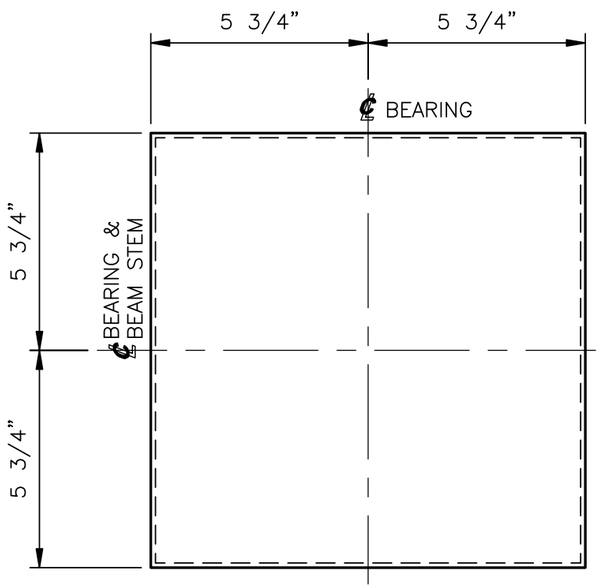

PLAN VIEW

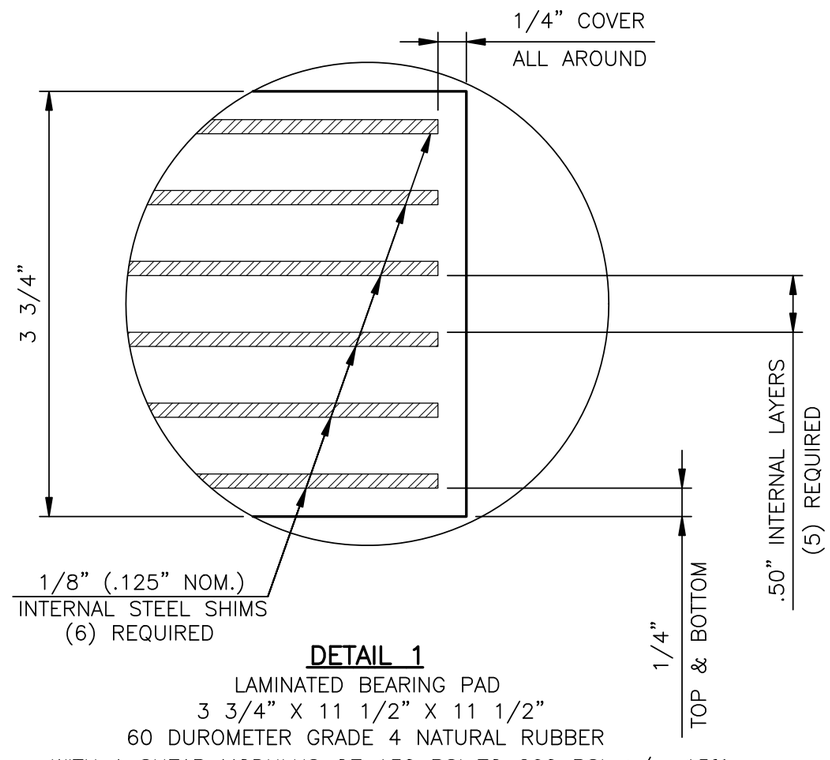

DETAIL 1

LAMINATED BEARING PAD
3 3/4" X 11 1/2" X 11 1/2"
60 DUROMETER GRADE 4 NATURAL RUBBER
WITH A SHEAR MODULUS OF 130 PSI TO 200 PSI +/− 15%
(8) REQUIRED FOR STRUCTURE

TEST PAD

LAMINATED BEARING PAD
3 3/4" X 11 1/2" X 11 1/2"
60 DUROMETER GRADE 4 NATURAL RUBBER
WITH A SHEAR MODULUS OF 130 PSI TO 200 PSI +/− 15%
(2) REQUIRED FOR TESTING

MAX. DESIGN SERVICE LOADS

DEAD LOAD = 30.5 kips
LIVE LOAD = 30.4 kips

SHOP NOTES:

1. ALL BEARINGS SHALL CONFORM TO APPLICABLE SUBSECTIONS OF SECTIONS 531 AND 731 OF THE 2011 VTAOT STANDARD SPECIFICATIONS AND SPECIAL PROVISIONS.
2. MATERIAL:
   ELASTOMER: 60 DUROMETER GRADE 4 NATURAL RUBBER. WITH A SHEAR MODULUS OF 130 PSI – 200 PSI ±15%.
   STEEL LAMINAE: ASTM A709 GR.36, A1011 GRADE 36 OR EQUAL.
3. ALL BEARINGS SHALL BE MARKED PRIOR TO SHIPPING. ALL MARKS SHALL BE PERMANANT AND BE VISIBLE AFTER ERECTION.
4. ALL DIMENSIONS ARE IN INCHES.
5. COSMEC REPRESENTATIVE KERRY MARCHAND: (508) 455–3290
6. VT.A.O.T. WILL BE NOTIFIED (7) DAYS BEFORE THE START OF FABRICATION.

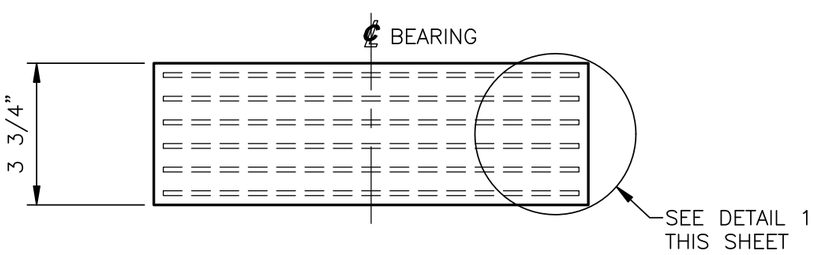

ELEVATION VIEW

LAMINATED ELASTOMERIC BEARING PAD
MARK: LEP1

(4) LOCATED AT ABUT. 1
(4) LOCATED AT ABUT. 2
(8) TOTAL REQUIRED FOR STRUCTURE

STATE OF VERMONT
AGENCY OF TRANSPORTATION
BRIDGE NO.35
TOWN HIGHWAY 65 (PALMER ROAD)
CLASS 3 LOCAL ROAD
ITEM NO. 531.17
TOWN OF RANDOLPH

STATE	COUNTY	CONTROL NO.
VT	ORANGE	N/A

PROJ. NO.: BRO 1444(57)

DYNAMIC RUBBER.:
LAMINATED BEARING PADS

Cosmec
1501 ROCKY RIDGE ROAD
P.O. BOX 2159
ATHENS, TEXAS 75751

SCALE: NONE	DRAWN BY: RP	CHECKED BY: ELS
	DATE: 12/5/14	DATE: 12/16/14
SHEET 1 OF 1	JOB NO.: 12849	

REV.	DESCRIPTION	BY	DATE	CK'D	DATE
0					

CUSTOMER: J.P. SICARD, INC.
DRAWING NUMBER: 12849–D1
REV. 0