PO Box 508
Barton, VT 05822
Phone: (802)525-9506
Fax: (802)525-4616
www.jpsicard.com

Submittal Data Sheet

Submittal #: 8

Submission #: 1

Date: 5/3/2016

Project Name: Irasburg IM Deck (46)

Owner: Vermont Agency of Transportation

Engineer: VTrans

Contractor: J.P. Sicard, Inc.

Item Number: 507.11

Supplier: Dimension Fabricators, Inc.

Description of Item: 507.11 Reinforcing Steel, Placement Drawings: Page 1: Span 1/Page 2: Span 2-4

Subsitution: NO

Engineers Review Comments:

Submitted By: Brad Drake
Title: Project Manager
Company: JP Sicard, Inc.

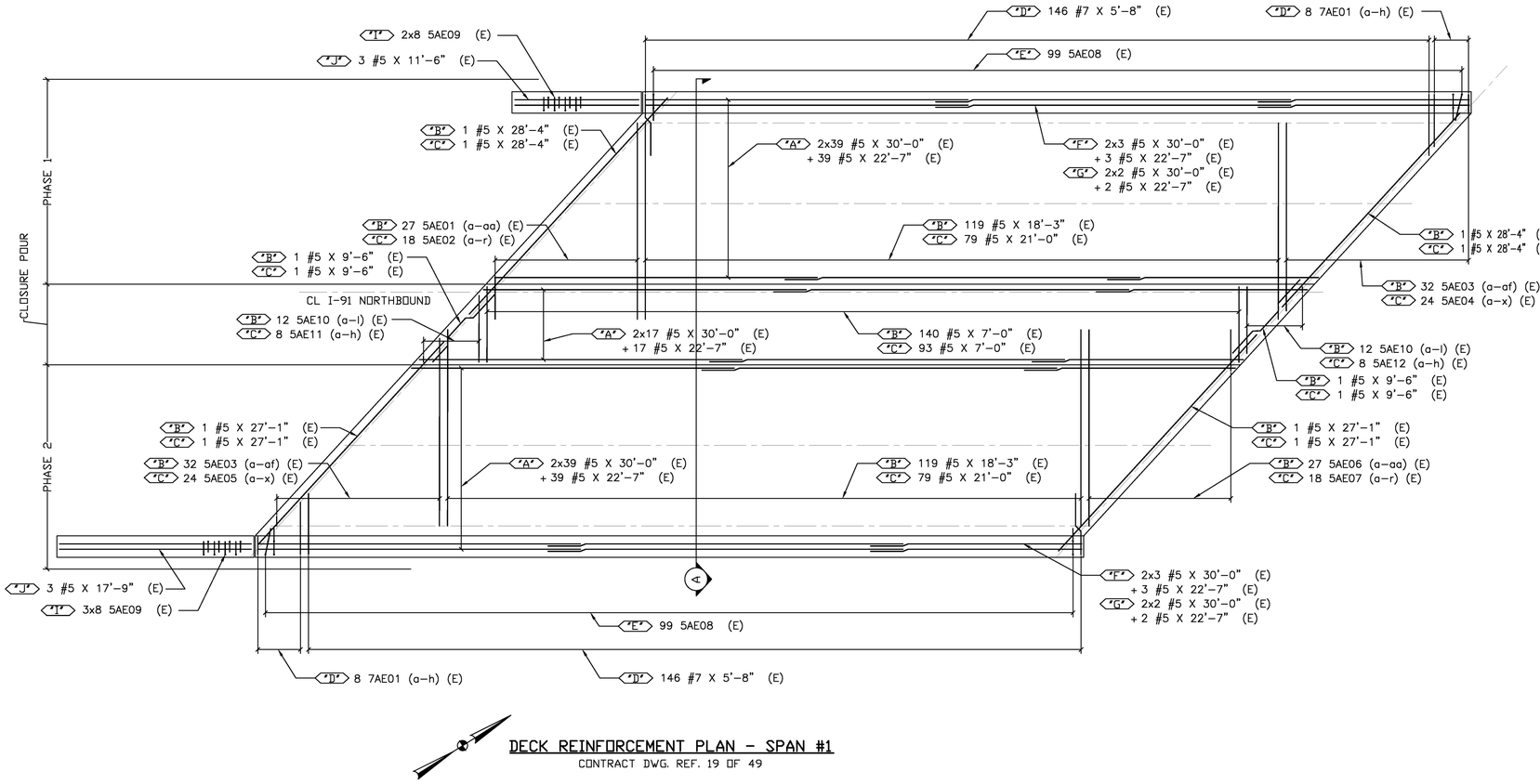

DECK REINFORCEMENT PLAN - SPAN #1

CONTRACT DWG. REF. 19 OF 49

Release Number:

BAR LIST

Bar Mark	Qty	Size	Total Length	Type	'A'	'B'	'C'	'D'	'E'	'F'	'G'	'H'	'J'	'K'	'O'	'R'
5AE01a	1	#5	3'-9"	0		3'-9"										
Varies To																
5AE01aa	1	#5	17'-11"	0		17'-11"										
5AE02a	1	#5	4'-3"	0		4'-3"										
Varies To																
5AE02r	1	#5	18'-3"	0		18'-3"										
5AE03a	2	#5	1'-2"	0		1'-2"										
Varies To																
5AE03af	2	#5	18'-1"	0		18'-1"										
5AE04a	1	#5	1'-9"	0		1'-9"										
Varies To																
5AE04x	1	#5	20'-7"	0		20'-7"										
5AE05a	1	#5	1'-8"	0		1'-8"										
Varies To																
5AE05x	1	#5	20'-5"	0		20'-5"										
5AE06a	1	#5	3'-10"	0		3'-10"										
Varies To																
5AE06aa	1	#5	18'-1"	0		18'-1"										
5AE07a	1	#5	4'-4"	0		4'-4"										
Varies To																
5AE07r	1	#5	18'-4"	0		18'-4"										
5AE08	198	#5	5'-8 X"	CM14		0'-10"	1'-4"	1'-5"	1'-3 X"	0'-10"				1'-6 X"		
5AE09	40	#5	3'-1"	17		1'-4"	1'-9"									
5AE10a	2	#5	0'-8"	0		0'-8"										
Varies To																
5AE10l	2	#5	6'-8"	0		6'-8"										
5AE11a	1	#5	0'-11"	0		0'-11"										
Varies To																
5AE11h	1	#5	6'-8"	0		6'-8"										
5AE12a	1	#5	1'-10"	0		1'-10"										
Varies To																
5AE12h	1	#5	6'-8"	0		6'-8"										
7AE01a	2	#7	1'-8"	0		1'-8"										
Varies To																
7AE01h	2	#7	5'-5"	0		5'-5"										

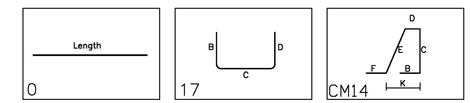

FOR APPROVAL

LAP CHART	
#5	3'-0"

LEGEND:

CONT.-CONTINUOUS	E.E.-EACH END
TRANS.-TRANSVERSE	E.F.-EACH FACE
DWLS.-DOWELS	F.F.-FRONT FACE
VERTS.-VERTICAL	R.F.-REAR FACE
HORIZ.-HORIZONTAL	E.W.-EACH WAY
T&B -TOP & BOTTOM	O.C.-ON CENTER
I.F.-INNER FACE	L.W.-LONG WAY
O.F.-OUTER FACE	S.W.-SHORT WAY

ELEVATIONS & DIMENSIONS SHOWN ON THIS DWG. ARE FOR REINF. DETAILING PURPOSES ONLY AND ARE NOT INTENDED FOR DIMENSIONAL CONSTRUCTION.

EPOXY REINF. BARS ASTM A615 GRADE 60, MARKED (E)

VERIFICATION OF UNCLEAR INFORMATION MAY BE REQUESTED ON THIS DRAWING. SHOULD VERIFICATION BE LEFT UN-ADDRESSED IT WILL REMAIN AS SHOWN AND ASSUME TO BE CORRECT.

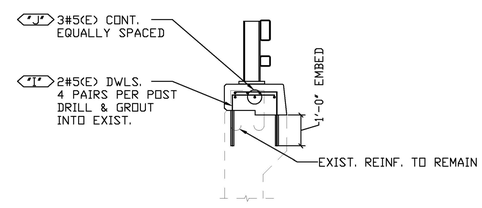

TYPICAL WINGWALL SECTION

CONTRACT DWG. REF. 24 OF 49

PLEASE CONFIRM CURB REINF. PLAN. CURB REINF. PLAN DRAWN PER CONTRACT DRAWINGS, NOT PER STD. DWG. S-360A.

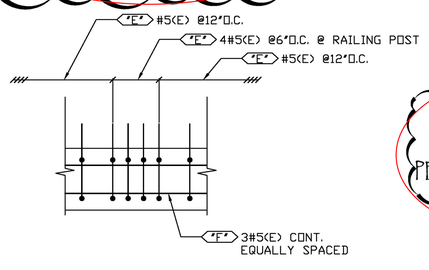

CURB REINF. PLAN

CONTRACT DWG. REF. 19

PLEASE CONFIRM DIMENSIONS

PLEASE CONFIRM BAR "G" IS REQ'D PER STD. DWG. S-360A

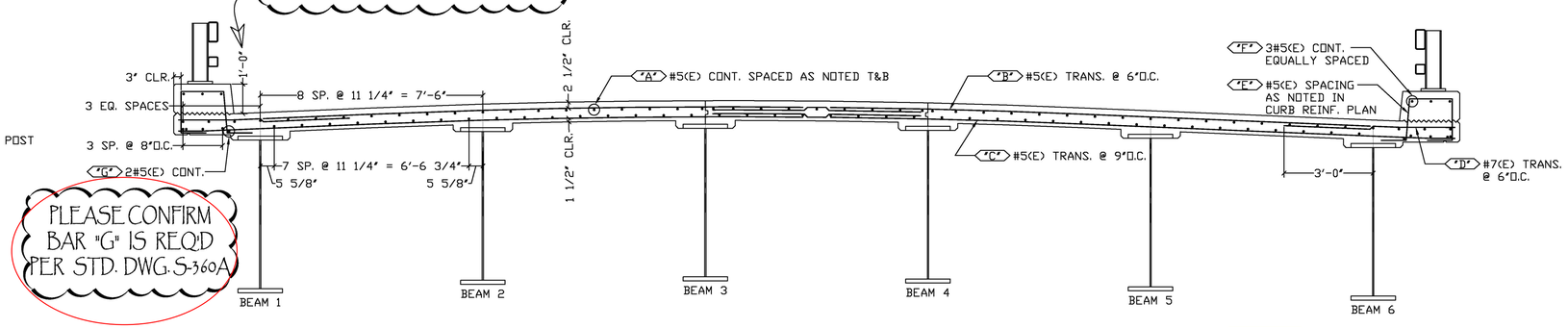

SECTION A

CONTRACT DWG. REF. A / 19 OF 49

ALL REINF. EPOXY

	DATE	REV.#	SENT FOR
6			
5			
4			
3			
2			
1	5/3/16	–	FOR APPROVAL

DIMENSION
DIMENSION FABRICATORS INC.
2000 7TH STREET
SCOTIA, N.Y. 12302
PH: (518) 374-1936
FAX (518) 374-4830
www.dimensionfabricators.com

STRUCTURE	VTAOT IRASBURG IM DECK (46) INTERSTATE 91 (PRINCIPLE ARTERIAL) BRIDGE NO. 107N
LOCATION	TOWN OF IRASBURG, COUNTY OF ORLEANS
ARCHITECT	
ENGINEER	CLD CONSULTING ENGINEERS
CUSTOMER	J.P. SICARD, INC.
DRAWN BY: CMB	DATE: 4/26/16
DFI #	9737
DRAWING COVERS	DECK SLAB – SPAN 1
DRAWING #	A

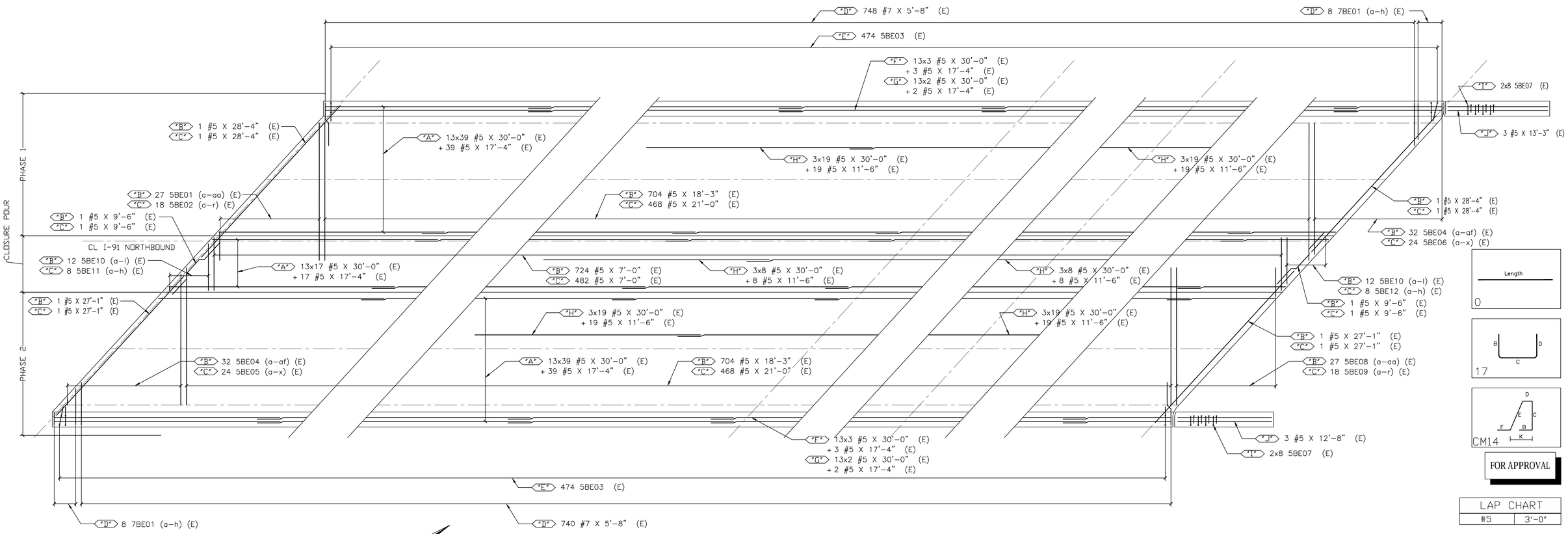

LAP CHART	
#5	3'-0"

DECK REINFORCEMENT PLAN - SPANS 2 THRU 4

CONTRACT DWG. REF. 20 OF 49

Release Number:

BAR LIST

Bar Mark	Qty	Size	Total Length	Type	'A'	'B'	'C'	'D'	'E'	'F'	'G'	'H'	'J'	'K'	'O'	'R'
5BE01a	1	#5	3'-9"	0		3'-9"										
Varies To																
5BE01aa	1	#5	17'-11"	0		17'-11"										
5BE02a	1	#5	4'-3"	0		4'-3"										
Varies To																
5BE02r	1	#5	18'-3"	0		18'-3"										
5BE03	948	#5	5'-8 X"	CM14		0'-10"	1'-4"	1'-5"	1'-3 X"	0'-10"				1'-6 X"		
5BE04a	2	#5	1'-2"	0		1'-2"										
Varies To																
5BE04af	2	#5	18'-1"	0		18'-1"										
5BE05a	1	#5	1'-8"	0		1'-8"										
Varies To																
5BE05x	1	#5	20'-5"	0		20'-5"										
5BE06a	1	#5	1'-9"	0		1'-9"										
Varies To																
5BE06x	1	#5	20'-7"	0		20'-7"										
5BE07	32	#5	3'-1"	17		1'-4"	1'-9"									

Release Number:

BAR LIST

Bar Mark	Qty	Size	Total Length	Type	'A'	'B'	'C'	'D'	'E'	'F'	'G'	'H'	'J'	'K'	'O'	'R'
5BE08a	1	#5	3'-10"	0		3'-10"										
Varies To																
5BE08aa	1	#5	18'-1"	0		18'-1"										
5BE09a	1	#5	4'-4"	0		4'-4"										
Varies To																
5BE09r	1	#5	18'-4"	0		18'-4"										
5BE10a	2	#5	0'-8"	0		0'-8"										
Varies To																
5BE10l	2	#5	6'-8"	0		6'-8"										
5BE11a	1	#5	0'-11"	0		0'-11"										
Varies To																
5BE11h	1	#5	6'-8"	0		6'-8"										
5BE12a	1	#5	1'-10"	0		1'-10"										
Varies To																
5BE12h	1	#5	6'-8"	0		6'-8"										
7BE01a	2	#7	1'-8"	0		1'-8"										
Varies To																
7BE01h	2	#7	5'-5"	0		5'-5"										

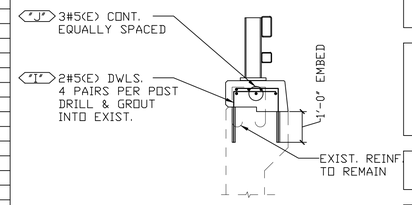

TYPICAL WINGWALL SECTION

CONTRACT DWG. REF. 24 OF 49

LEGEND:

CONT.-CONTINUOUS	E.E.-EACH END
TRANS.-TRANSVERSE	E.F.-EACH FACE
DWLS.-DOWELS	F.F.-FRONT FACE
VERTS.-VERTICAL	R.F.-REAR FACE
HORIZ.-HORIZONTAL	E.W.-EACH WAY
T&B -TOP & BOTTOM	O.C.-ON CENTER
I.F.-INNER FACE	L.W.-LONG WAY
O.F.-OUTER FACE	S.W.-SHORT WAY

ELEVATIONS & DIMENSIONS SHOWN ON THIS DWG. ARE FOR REINF. DETAILING PURPOSES ONLY AND ARE NOT INTENDED FOR DIMENSIONAL CONSTRUCTION.

EPOXY REINF. BARS ASTM A615 GRADE 60, MARKED (E)

VERIFICATION OF UNCLEAR INFORMATION MAY BE REQUESTED ON THIS DRAWING. SHOULD VERIFICATION BE LEFT UN-ADDRESSED IT WILL REMAIN AS SHOWN AND ASSUME TO BE CORRECT.

PLEASE CONFIRM CURB REINF. PLAN. CURB REINF. PLAN DRAWN PER CONTRACT DRAWINGS, NOT PER STD. DWG. S-360A.

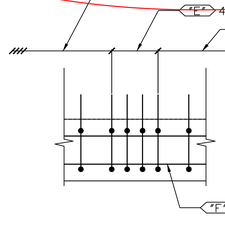

CURB REINF. PLAN

CONTRACT DWG. REF. 19

PLEASE CONFIRM DIMENSIONS

PLEASE CONFIRM BAR "G" IS REQ'D PER STD. DWG. S-360A

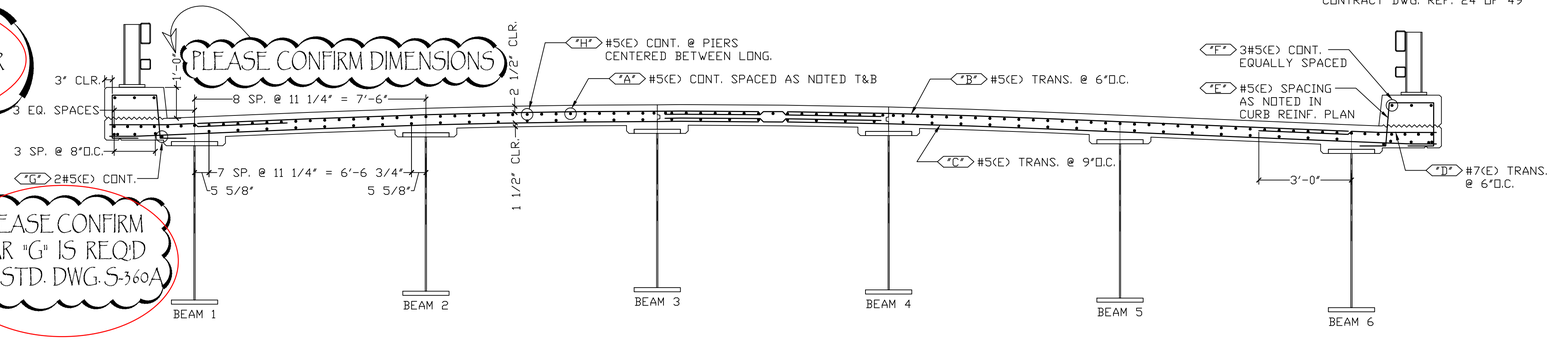

SECTION A

CONTRACT DWG. REF. A / 19 OF 49

ALL REINF. EPOXY

6			
5			
4			
3			
2			
1	5/3/16	–	FOR APPROVAL
	DATE	REV.#	SENT FOR

DIMENSION
DIMENSION FABRICATORS INC.
2000 7TH STREET
SCOTIA, N.Y. 12302
PH: (518) 374-1936
FAX (518) 374-4830
www.dimensionfabricators.com

STRUCTURE	VTAOT IRASBURG IM DECK (46) INTERSTATE 91 (PRINCIPLE ARTERIAL) BRIDGE NO. 107N
LOCATION	TOWN OF IRASBURG, COUNTY OF ORLEANS
ARCHITECT	
ENGINEER	CLD CONSULTING ENGINEERS
CUSTOMER	J.P. SICARD, INC.

DRAWN BY	DATE	DFI #
CMB	5/2/16	9737

DRAWING COVERS	DRAWING #
DECK SLAB – SPANS 2–4	B