PO Box 508
Barton, VT 05822
Phone: (802) 525-9506
Fax: (802) 525-4616
www.jpsicard.com

Submittal Data Sheet

Submittal #:	5
Submission #:	1
Date:	4/27/2015
Project Name:	Barton BRO (1449) Bridge Replacement
Owner:	Town of Barton, VT
Engineer:	VTrans
Contractor:	J.P. Sicard Inc.
Item Number:	504.1
Supplier:	H.B. Fleming, Inc.
Description of Item:	Furnishing Equipment for Driving Piling
Substitution:	NO

Engineers Review Comments:

Submitted By:	Brad Drake
Title:	Project Manager
Company:	JP Sicard Inc.

H. B. FLEMING, INC.
Contracting & Engineering
89 Pleasant Avenue
South Portland, ME 04106

Phone (207) 799-8514

LETTER OF TRANSMITTAL

DATE 4/27/15 JOB NO.

ATTENTION BRAD DRAKE

RE: BRIDGE #8 - BARTON, VT

TO J.P. SICARD

WE ARE SENDING YOU ☑ Attached ☐ Under separate cover via _____ the following items:

☐ Shop drawings ☐ Prints ☐ Plans ☐ Samples ☐ Specifications

☐ Copy of letter ☐ Change order ☐ _____

COPIES	DATE	NO.	DESCRIPTION
1	4/24/15		PILE DRIVING SUBMITTAL

THESE ARE TRANSMITTED as checked below:

☑ For approval ☐ Approved as submitted ☐ Resubmit _____ copies for approval

☐ For your use ☐ Approved as noted ☐ Submit _____ copies for distribution

☐ As requested ☐ Returned for corrections ☐ Return _____ corrected prints

☐ For review and comment ☐ _____

☐ FOR BIDS DUE _____ ☐ PRINTS RETURNED AFTER LOAN TO US

REMARKS

COPY TO _____

SIGNED: [signature]

If enclosures are not as noted, kindly notify us at once.

H.B. FLEMING, INC.

CONTRACTING · ENGINEERING

89 Pleasant Ave. South Portland, ME 04106

Phone 207-799-8514 Fax 207-799-8538

www.hbfleming.com

PILE DRIVING BRIDGES SUBMARINE PIPELINES

Submittal

Submitted To:

Client: J.P. Sicard, Inc.
Attention: Brad Drake
Date: 4/24/2015

Project: Bridge #8
Location: Barton, VT

Subject: Pile Driving Criteria

H.B. Fleming proposes to use the following driving criteria for piles to be installed at the above location:

Hammer

- Either an MKT DE-42 or an APE D19-42 open-ended diesel pile hammer will be used to drive the piles. The DE-42 has a ram weight of 4,200 lbs, a maximum stroke of 10'-6", and a maximum rated energy of 42,000 ft-lbs. The D19-42 has a ram weight of 4,190 lbs, a maximum stroke of 10'-2", and a maximum rated energy of 42,800 ft-lbs.
- The hammer cushioning material consists of 2 inches of Monocast MC 901 material.

Pile

- HP12x63 ASTM A572 Gr. 50 steel piles.
- The Nominal Pile Driving Resistance, which we have based our analysis on, is 109 tons (218 kips).
- Piles will be fitted with cast steel driving points.

Results

- Piles will preliminarily be driven to the following criteria:
  - 4 blows per inch for 3 consecutive inches, or in the case of abrupt refusal,
  - 5 blows for any ½" of movement or 2 blows with no movement
- These criteria are based upon the output generated from the WEAP analysis that follows. On site testing of driven piles will verify pile capacity, driving stress, and actual production driving criteria.

MKT analysis shows 3 blows per inch corresponding to required resistance in supporting documentation? Also, please include the minimum stroke required for this criteria.

Signed: _____

David Gifford

H.B. FLEMING PILE EQUIPMENT DATA SHEET

Project: Bridge # 8
Location: Barton, VT

Date: 4/24/2015
Client: J.P. Sicard, Inc.

HAMMER

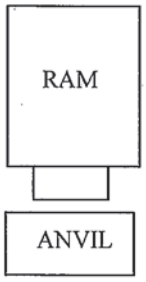

Manufacturer:	MKT	APE
Model:	DE-42	D19-42
Type:	Single Acting Diesel	Single Acting Diesel
Length of Stroke:	10' - 6"	10' - 2"
Rated Energy at Given Stroke:	42,000 ft-lb	42,800 ft-lb
Modifications:	None	None

HAMMER CUSHION

Material:	Monocast MC901
Thickness:	2"
Area:	397.6 in^2
Modulus of Elasticity:	285 ksi
Coefficient of Restitution:	0.8

DRIVE HEAD

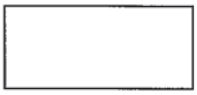

Weight:	1200 lb

PILE CUSHION

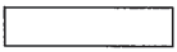

Cushion Material:	N/A
Thickness:	N/A
Modulus of Elasticity:	N/A
Coefficient of Restitution:	N/A

PILE

Pile Type:	HP12x63
Length in Leads:	Up to 50'
Weight/LF:	63 lb
Wall Thickness:	0.515"
Taper:	N/A
Cross Sectional Area:	18.4 in2
Nominal Pile Driving Resistance:	218 kips
Splice Description:	Web Diamond/Full Penetration Flange Groove Welds
Tip Treatment Description:	Cast Steel Point

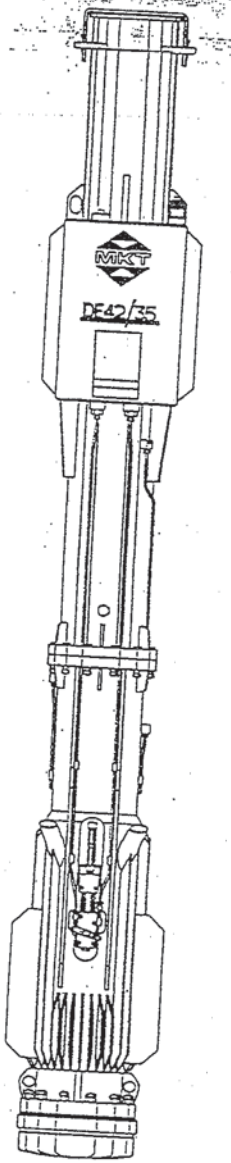

INTRODUCING THE NEW

DE42/35

MAXIMUM DIESEL HAMMER FLEXIBILITY FITTING IN 8 x 20 LEADS WITH RAM WEIGHTS TO 4,200 LBS.

ONE HAMMER... MULTIPLE RAM SIZES... AND ENERGY RANGES. ANOTHER MKT FIRST PROVIDING THE CONTRACTOR WITH HAMMER SIZE FLEXIBILITY AND REDUCED EQUIPMENT INVESTMENT COSTS. MKT DIESEL HAMMERS CONTINUE TO OFFER FEATURES WHICH INSURE DEPENDABLE AND PRODUCTIVE OPERATION. USING EITHER STANDARD OR REMOTE FUEL DELIVERY SYSTEMS.

SPECIFICATIONS DE-42/35		
RAM-PISTON WEIGHT (LBS.)	3,500	4,200
ENERGY RATING (FT.LBS.)	35,000	42,000
BEARING BASED ON ENGINEERING NEWS FORMULA (TONS)	230	230
MAXIMUM OBTAINABLE STROKE	10'-6"	10'-6"
OVERALL LENGTH WITH DRIVE CAP	16'-7"	16'-7"
WEIGHT, HAMMER ONLY (LBS.)	8,600	9,300
WEIGHT, HAMMER AND UNIVERSAL DRIVE CAP (LBS.)	9,550	10,250

PUBLISHED ENERGY RATINGS ARE EQUAL TO RAM WEIGHT X 10.0 FT. RAM STROKE. ACTUAL ENERGIES DELIVERED ARE A FUCTION OF THE OVERALL JOB CONDITIONS. BEARING RATINGS ARE BASED UPON ENGINEERING NEWS FORMULA, PILE SET EQUAL TO 0.1 IN./BLOW.

PRODUCT LIST

SINGLE ACTING DIESEL PILE HAMMERS
AIR PILE HAMMERS
VIBRATORY PILE DRIVERS/EXTRACTORS
VIBRATORY HAMMER ACCESSORIES
PILE DRIVING LEAD SYSTEMS
CUSTOM ENGINEERED PRODUCTS
DOUBLE ACTING DIESEL PILE HAMMERS
DRIVE CAPS AND ACCESSORIES
HYDRAULIC POWER UNITS
HYDRAULIC AUGER SYSTEMS
BOTTOM BRACES
LEAD ACCESSORIES

ufacturing, Inc. reserves the right to amend these specifications at any time without notice. The only warranty applicable is our standard written warranty. We make no other warranty, expressed or implied.

APE/SEMW Model D19-42 Single Acting Impact Hammer

operates on diesel or bio-diesel for all types of impact pile driving

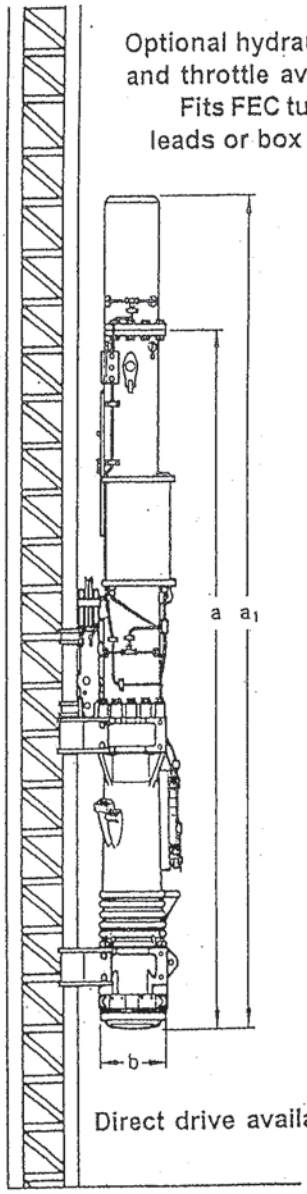

Optional hydraulic trip and throttle available. Fits FEC tube leads or box type.

Direct drive available

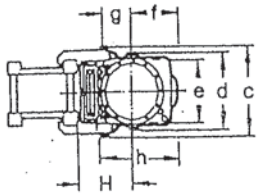

MODEL D19-42 (1.9 metric ton ram)

SPECIFICATIONS

Maximum Rated energy	42,800 ft-lbs
Minimum rated energy	16,000 ft-lbs
Stroke at rated energy	10 feet 2 inches
Maximum obtainable stroke	10 feet 3 inches
Speed (blows per minute)	37-53

WEIGHTS

Ram	4190 lbs
Anvil	754 lbs
Hammer weight (includes trip device)	7,800 lbs
Typical operating (weight with drive cap)	9,600 lbs

CAPACITIES

Fuel tank (runs on diesel or bio -diesel)	8.5 gal
Oil tank	2.4 gal

CONSUMPTION

Diesel or Bio-diesel fuel	1.5 gal/hr
Lubrication	2.4 gal/hr
Grease	twice per day

DIMENSIONS OF HAMMER

a_1	Length overall	186.2 inches
a	Length over cylinder extension	219. 3 inches
b	Impact block diameter	17.3 inches
c	Width over bolts	22 inches
d	Hammer width overall	19 inches
e	Width for guiding- face to face	12.5 inches
f	Hammer center to pump guard	13.5 inches
g	Hammer center to bolt center	13.6 inches
h	hammer depth overall	26.2 inches
H	Minimum clearance for leads	14.2 inches

We reserve the right to modify specifications without notice. Contact APE directly for updated literature.

Features

Fuel injection designed by APE engineers
Fuel and lube pumps with 50% less parts than ICE
Hardened piston needs no high maintenance wear rings
Direct drive available for maximum production on steel piles
Fuel pump mounted where heat will not harm it
Variable mechanical cam fuel pump- no air pistons or rings
Optional hydraulic variable fuel remote control
Heavy duty trip system for years of fault free operation
Chrome rings for super long life
Low maintenance and extremely low parts pricing
German design at a reasonable price
Two year APE warranty

AMERICAN PILEDRIVING EQUIPMENT, INC. APE

SHANGHAI JINTAI CO., LTD.
Shanghai Engineering Machinery Works

APE Corporate Offices
7032 South 196th
Kent, Washington 98032 USA
(800) 248-8498 & (253) 872-0141
(253) 872-8710 Fax

4/99

Visit our WEB site:
www.apevibro.com
e-mail: ape@apevibro.com

JOINT WELDING
PROCEDURE SPECIFICATION

Material specification: ASTM A572 GR. 50 / EQUIVALENT
Welding process: SMAW
Manual or machine: MANUAL
Position of welding: HORIZONTAL
Filler metal specification: AWS A5.1
Filler metal classification: E7018
Flux: N/A
Shielding gas: N/A Flow rate: N/A
Single or multiple pass: MULTIPLE IF REQUIRED
Single or multiple arc: SINGLE
Welding current: DC
Polarity: REVERSE
Welding progression: N/A
Root treatment: GRIND / BEVEL TO PROFILE
Preheat and interpass temperature: PER AWS D1.5
Postheat treatment: NONE

WELDING PROCEDURE

Pass no.	Electrode size	Welding current: Amperes	Welding current: Volts	Travel speed	Joint detail
1	1/8"	120-150	12-24	1 FT/min	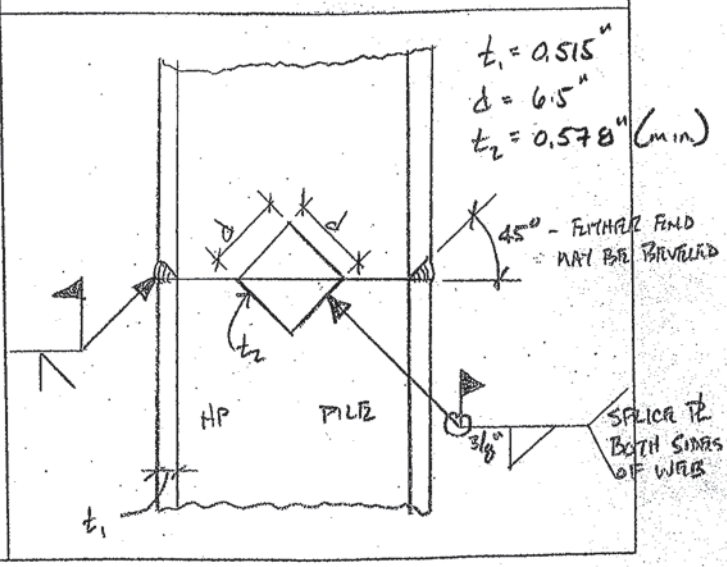
2+	5/32"	140-180	12-24	1 FT/min	

This procedure may vary due to fabrication sequence, fit-up, pass size, etc., within the limitation of variables given in Section 5.

Procedure no. VAOT WEB DIAMOND SPLICE Contractor H.B. FLEMING, INC.
Revision no. Ø Authorized by
Form E-2 Date 12/16/2014

JOINT WELDING
PROCEDURE SPECIFICATION

Material specification: PILE = ASTM A572 GR. 50 / EQUIVALENT ; POINT = ASTM A27 65/35
Welding process: SMAW
Manual or machine: MANUAL
Position of welding: HORIZONTAL OR VERTICAL
Filler metal specification: AWS A5.1
Filler metal classification: E7018
Flux: N/A
Shielding gas: N/A Flow rate: N/A
Single or multiple pass: MULTIPLE (IF REQUIRED)
Single or multiple arc: SINGLE
Welding current: DC
Polarity: REVERSE
Welding progression: N/A
Root treatment: NONE - POINTS ARE PRE-BEVELED TO PROFILE
Preheat and interpass temperature: PER AWS D1.5
Postheat treatment: NONE

WELDING PROCEDURE

Pass no.	Electrode size	Welding current		Travel speed	Joint detail
		Amperes	Volts		
1	1/8"	120-150	12-24	1 FT/MIN	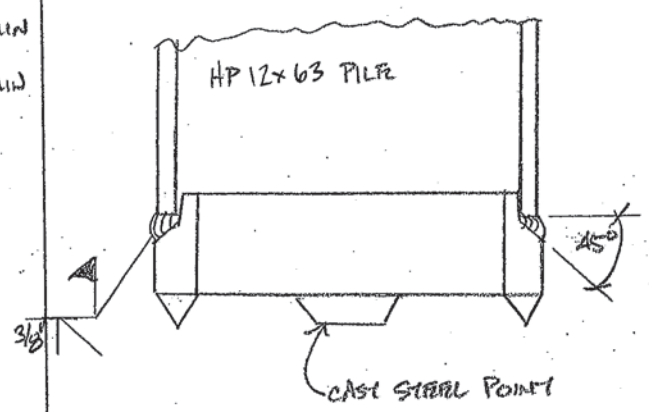
2+	5/32"	140-180	12-24	1 FT/MIN	

This procedure may vary due to fabrication sequence, fit-up, pass size, etc., within the limitation of variables given in Section 5.

Procedure no. H PILE POINT ATTACHMENT Contractor A.B. FRANK, INC.
Revision no. Ø Authorized by [signature]
Form E-2 Date 12/16/2014

Form E-2 — Welding Procedure Specification

HARD-BITE™ – HP-77600-B 30#

Dimensions

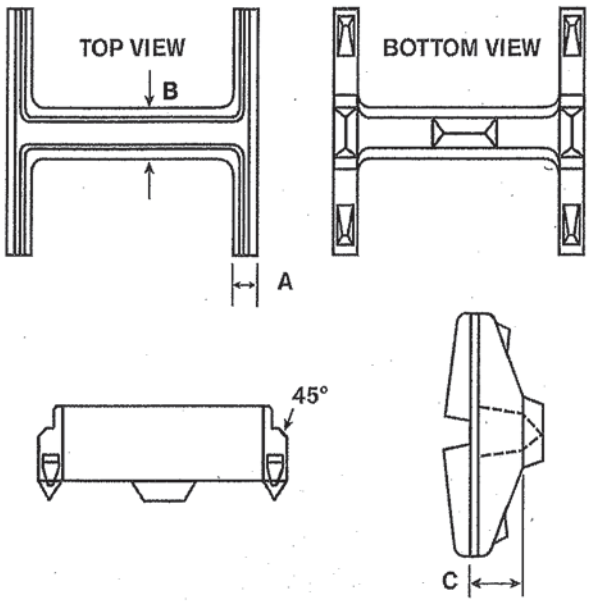

MATERIAL: CAST STEEL

ASTM A148 90/60

	12"
A	1"
B	1-5/16"
C	3"
Wt.	31#

Installation Instructions

1. Fit point onto the end of the square cut pile end.
2. Weld point to the pile in either flat or vertical position using E7018 electrodes.
3. Weld across full width of flange following chart below for minimum size weld.

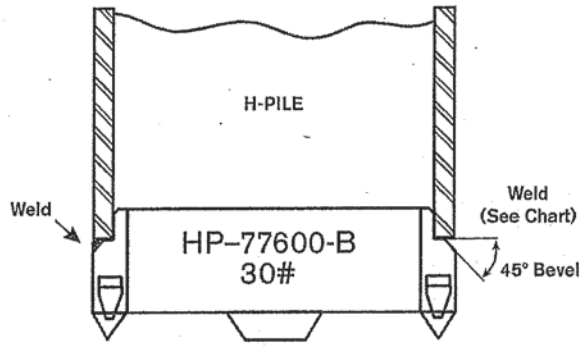

Pile Size	Flange Thickness	Groove Weld
HP 12 x 84	.685	3/8
x 74	.610	3/8
x 63	.515	5/16
x 53	.435	5/16

ASSOCIATED PILE & FITTING

PO Box 5933 Parsippany, NJ 07054-5933
Tel: 973-773-8400
Fax: 973-428-5146
email: apf@associatedpile.com
www.associatedpile.com
Call Toll Free: 800-526-9047

(12/11)

H.B. Fleming
Barton, VT

24-Apr-2015
GRLWEAP (TM) Version 2005

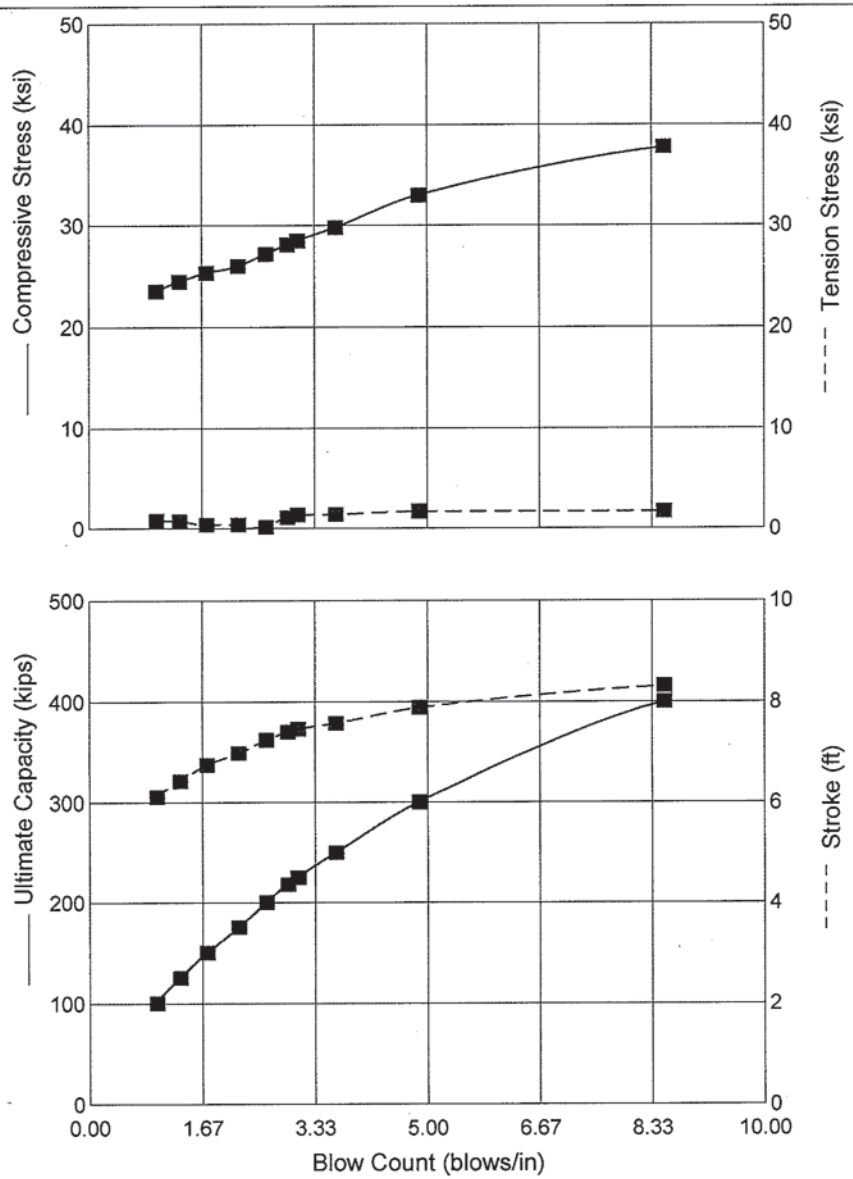

MKT DE 42/35

Efficiency	0.660
Helmet	1.20 kips
Hammer Cushion	40399 kips/in
Skin Quake	0.100 in
Toe Quake	0.040 in
Skin Damping	0.050 sec/ft
Toe Damping	0.150 sec/ft
Pile Length	80.00 ft
Pile Penetration	78.00 ft
Pile Top Area	18.40 in2

Pile Model

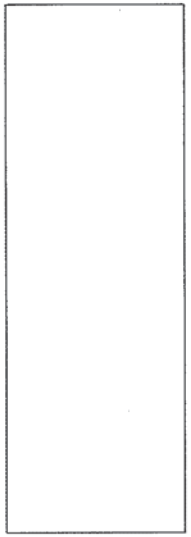

Skin Friction Distribution

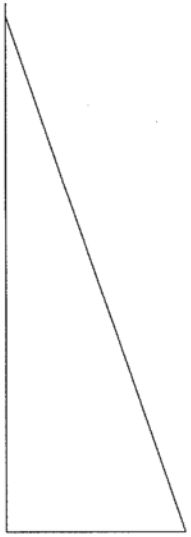

Res. Shaft = 20 %
(Proportional)

MKT DE-42

MKY DE-42

H.B. Fleming
Barton, VT

24-Apr-2015
GRLWEAP (TM) Version 2005

Ultimate Capacity kips	Maximum Compression Stress ksi	Maximum Tension Stress ksi	Blow Count blows/in	Stroke ft	Energy kips-ft
100.0	23.51	0.79	1.0	6.11	16.05
125.0	24.45	0.71	1.3	6.42	15.49
150.0	25.32	0.37	1.7	6.74	15.21
175.0	25.99	0.37	2.2	6.98	15.07
200.0	27.15	0.15	2.6	7.24	15.24
218.0	28.06	1.10	2.9	7.40	15.46
225.0	28.45	1.35	3.1	7.46	15.49
250.0	29.76	1.40	3.6	7.57	15.52
300.0	32.97	1.68	4.9	7.88	16.14
400.0	37.72	1.69	8.5	8.31	16.97

MKT DE-42

OUT OSG HAM STR FUL PEL N SPL N-U P-D %SK ISM 0 PHI RSA ITR H-D MXT DEx
6 0 155 0 1 0 0 0 0 0 20 0 0 0 0 0 0 0 0.000
Pile g Hammer g Toe Area Pile Size Pile Type
32.170 32.170 144.000 12.000 Unknown
W Cp A Cp E Cp T Cp CoR ROut StCp
1.200 283.500 285.0 2.000 0.800 0.010 0.0
A Cu E Cu T Cu CoR ROut StCu
0.000 0.0 0.000 0.000 0.000 0.0
LPle APle EPle WPle Peri Strg CoR ROut
80.000 18.400 30000.000 492.000 4.000 36.000 0.850 0.010
Manufac Hmr Name HmrType No Seg-s
MKT DE 42/35 1 5
Ram Wt Ram L Ram Dia MaxStrk RtdStrk Efficy
4.20 150.00 12.00 13.50 10.00 0.80
IB. Wt IB. L IB.Dia IB CoR IB RO
0.80 23.50 11.22 0.900 0.010
CompStrk A Chamber V Chamber C Delay C Duratn Exp Coeff VolCStart Vol CEnd
18.59 113.10 185.63 0.001 0.002 1.250 0.00 0.00
P atm P1 P2 P3 P4 P5
14.70 1316.00 0.00 0.00 0.00 0.00
Stroke Effic. Pressure R-Weight T-Delay Exp-Coeff Eps-Str Total-AW
10.0000 0.6600 1316.0000 0.0000 0.0000 0.0000 0.0100 0.0000
Qs Qt Js Jt Qx Jx Rati Dept
0.100 0.040 0.050 0.150 0.000 0.000 0.000 0.000
Research Soil Model: Atoe, Plug, Gap, Q-fac
0.000 0.000 0.000 0.000
Research Soil Model: RD-skn: m, d, toe: m, d
0.000 0.000 0.000 0.000
Res. Distribution
Dpth Rskn Dpth Dpth
0.00 0.00 78.00 78.00 0.00 0.00 0.00 0.00 0.00 0.00
0.00 0.00 0.00 0.00 0.00 0.00 0.00 0.00 0.00 0.00
78.00 1.00 0.00 0.00 0.00 0.00 0.00 0.00 0.00 0.00
80.00 1.03 0.00 0.00 0.00 0.00 0.00 0.00 0.00 0.00
Rult
100.0 125.0 150.0 175.0 200.0 218.0 225.0 250.0 300.0 400.0
Diameter COGHammer WHammer ABatter Depth Sup Flag
0.000 0.000 0.000 0.000 0.000 0

MKT DE-42

Hammer Model: DE 42/35 Made by: MKT

No.	Weight kips	Stiffn k/inch	CoR ft	C-Slk k/ft/s	Dampg
1	0.840				
2	0.840	109327.4	1.000	0.0100	
3	0.840	109327.4	1.000	0.0100	
4	0.840	109327.4	1.000	0.0100	
5	0.840	109327.4	1.000	0.0100	
Imp Block	0.800	57661.2	0.900	0.0100	
Helmet	1.200	40398.8	0.800	0.0100	5.4
Combined Pile Top		13800.0			

HAMMER OPTIONS:

Hammer File ID No. 155 Hammer Type OE Diesel
Stroke Option FxdP-VarS Stroke Convergence Crit. 0.010
Fuel Pump Setting Maximum

HAMMER DATA:

Ram Weight (kips) 4.20 Ram Length (inch) 150.00
Maximum Stroke (ft) 13.50
Rated Stroke (ft) 10.00 Efficiency 0.660

Maximum Pressure (psi) 1316.00 Actual Pressure (psi) 1316.00
Compression Exponent 1.350 Expansion Exponent 1.250
Ram Diameter (inch) 12.00
Combustion Delay (s) 0.00100 Ignition Duration (s) 0.00200

HAMMER CUSHION			PILE CUSHION		
Cross Sect. Area	(in2)	283.50	Cross Sect. Area	(in2)	0.00
Elastic-Modulus	(ksi)	285.0	Elastic-Modulus	(ksi)	0.0
Thickness	(inch)	2.00	Thickness	(inch)	0.00
Coeff of Restitution		0.8	Coeff of Restitution		0.0
RoundOut	(ft)	0.0	RoundOut	(ft)	0.0
Stiffness	(kips/in)	40398.8	Stiffness	(kips/in)	0.0

MKT DE-42

PILE PROFILE:

Toe Area	(in2)	144.000	Pile Type	Unknown
Pile Size	(inch)	12.000		

L b Top	Area	E-Mod	Spec Wt	Perim	Strength	Wave Sp	EA/c
ft	in2	ksi	lb/ft3	ft	ksi	ft/s	k/ft/s
0.0	18.40	30000.	492.0	4.0	36.000	16807.	32.8
80.0	18.40	30000.	492.0	4.0	36.000	16807.	32.8

Wave Travel Time 2L/c (ms) 9.520

Pile and Soil Model Total Capacity Rut (kips) 100.0

No.	Weight	Stiffn	C-Slk	T-Slk	CoR	Soil-S	Soil-D	Quake	LbTop	Perim	Area
	kips	k/in	ft	ft	kips	s/ft	inch	ft	ft	in2	
1	0.210	13800.	0.010	0.000	0.85	0.0	0.050	0.100	3.33	4.0	18.4
2	0.210	13800.	0.000	0.000	1.00	0.1	0.050	0.100	6.67	4.0	18.4
3	0.210	13800.	0.000	0.000	1.00	0.1	0.050	0.100	10.00	4.0	18.4
4	0.210	13800.	0.000	0.000	1.00	0.2	0.050	0.100	13.33	4.0	18.4
5	0.210	13800.	0.000	0.000	1.00	0.3	0.050	0.100	16.67	4.0	18.4
6	0.210	13800.	0.000	0.000	1.00	0.4	0.050	0.100	20.00	4.0	18.4
7	0.210	13800.	0.000	0.000	1.00	0.4	0.050	0.100	23.33	4.0	18.4
8	0.210	13800.	0.000	0.000	1.00	0.5	0.050	0.100	26.67	4.0	18.4
9	0.210	13800.	0.000	0.000	1.00	0.6	0.050	0.100	30.00	4.0	18.4
10	0.210	13800.	0.000	0.000	1.00	0.7	0.050	0.100	33.33	4.0	18.4
11	0.210	13800.	0.000	0.000	1.00	0.7	0.050	0.100	36.67	4.0	18.4
12	0.210	13800.	0.000	0.000	1.00	0.8	0.050	0.100	40.00	4.0	18.4
13	0.210	13800.	0.000	0.000	1.00	0.9	0.050	0.100	43.33	4.0	18.4
14	0.210	13800.	0.000	0.000	1.00	0.9	0.050	0.100	46.67	4.0	18.4
15	0.210	13800.	0.000	0.000	1.00	1.0	0.050	0.100	50.00	4.0	18.4
16	0.210	13800.	0.000	0.000	1.00	1.1	0.050	0.100	53.33	4.0	18.4
17	0.210	13800.	0.000	0.000	1.00	1.2	0.050	0.100	56.67	4.0	18.4
18	0.210	13800.	0.000	0.000	1.00	1.2	0.050	0.100	60.00	4.0	18.4
19	0.210	13800.	0.000	0.000	1.00	1.3	0.050	0.100	63.33	4.0	18.4
20	0.210	13800.	0.000	0.000	1.00	1.4	0.050	0.100	66.67	4.0	18.4
21	0.210	13800.	0.000	0.000	1.00	1.5	0.050	0.100	70.00	4.0	18.4
22	0.210	13800.	0.000	0.000	1.00	1.5	0.050	0.100	73.33	4.0	18.4
23	0.210	13800.	0.000	0.000	1.00	1.6	0.050	0.100	76.67	4.0	18.4
24	0.210	13800.	0.000	0.000	1.00	1.7	0.050	0.100	80.00	4.0	18.4
Toe				80.0	0.150	0.040					

5.029 kips total unreduced pile weight (g= 32.17 ft/s2)
5.029 kips total reduced pile weight (g= 32.17 ft/s2)

PILE, SOIL, ANALYSIS OPTIONS:

Uniform pile	Pile Segments: Automatic		
No. of Slacks/Splices	0	Pile Damping (%)	1
Pile Penetration (ft)	78.00	Pile Damping Fact.(k/ft/s)	0.657
% Shaft Resistance	20		
Soil Damping Option	Smith		
Max No Analysis Iterations	0	Time Increment/Critical	160

MKT DE-42

Output Time Interval 1 Analysis Time-Input (ms) 0
Output Level: Variable vs Time
Gravity Mass, Pile, Hammer: 32.170 32.170 32.170
Output Segment Generation: Automatic

Rut= 218.0, Rtoe = 174.4 kips, Time Inc. =0.088 ms

No	mxTForce	t	mxCForce	t	mxTStrss	t	mxCStrss	t	max V	t	max D	t	max Et
	kips	ms	kips	ms	ksi	ms	ksi	ms	ft/s	ms	inch	ms	kip-ft
1	0.0	0	484.4	2	0.00	0	26.32	2	14.04	2	0.708	12	15.46
2	-1.1	50	489.0	2	-0.06	50	26.57	2	14.14	2	0.696	12	15.36
3	-4.1	50	492.6	2	-0.23	50	26.77	2	14.16	2	0.683	12	15.26
4	-7.0	50	494.2	2	-0.38	50	26.86	2	14.19	2	0.669	13	15.13
5	-9.6	50	496.6	3	-0.52	50	26.99	3	14.19	3	0.656	13	14.99
6	-12.0	50	496.1	3	-0.65	50	26.96	3	14.16	3	0.642	13	14.83
7	-14.0	50	498.3	3	-0.76	50	27.08	3	14.16	3	0.628	13	14.66
8	-15.8	50	498.0	3	-0.86	50	27.07	3	14.09	3	0.613	13	14.49
9	-17.4	50	498.2	3	-0.95	50	27.08	3	14.08	4	0.599	13	14.30
10	-18.6	50	498.4	4	-1.01	50	27.09	4	14.02	4	0.584	14	14.09
11	-19.6	50	496.5	4	-1.06	50	26.99	4	13.94	4	0.570	14	13.89
12	-20.1	50	497.2	4	-1.09	50	27.02	4	13.90	4	0.556	13	13.68
13	-20.3	50	496.0	4	-1.10	50	26.96	4	13.81	4	0.542	13	13.46
14	-19.7	50	494.6	4	-1.07	50	26.88	4	13.73	5	0.528	13	13.24
15	-18.2	50	494.2	5	-0.99	50	26.86	5	13.66	5	0.514	13	13.02
16	-15.3	50	492.2	5	-0.83	50	26.75	5	13.54	5	0.500	13	12.79
17	-12.4	50	491.1	5	-0.67	50	26.69	5	13.45	5	0.486	13	12.55
18	-10.1	50	490.0	5	-0.55	50	26.63	5	13.35	5	0.472	13	12.32
19	-8.5	49	487.6	5	-0.46	49	26.50	5	13.22	6	0.458	14	12.08
20	-7.1	49	486.2	6	-0.39	49	26.42	6	13.14	6	0.445	14	11.85
21	-5.7	49	482.6	6	-0.31	49	26.23	6	13.12	6	0.432	14	11.61
22	-4.2	49	477.9	6	-0.23	49	25.97	6	12.82	6	0.418	14	11.37
23	-2.9	49	516.2	6	-0.16	49	28.06	6	11.39	6	0.405	14	11.14
24	-1.6	48	508.3	6	-0.09	48	27.63	6	12.13	7	0.392	15	10.98

(Eq) Strokes Analyzed and Last Return (ft):
10.00 7.40 7.34

Max. Combustion Pressure 1316.0 psi

Rut	Bl Ct	Stroke (ft)		Ten Str	i	t	Comp Str	i	t	ENTHRU	Bl Rt
kips	b/ft	down	up	ksi			ksi		kip-ft	b/min	
100.0	12.0	6.11	6.08	-0.79	7	48	23.51	12	4	16.1	47.5
125.0	16.1	6.42	6.41	-0.71	8	34	24.46	11	4	15.5	46.3
150.0	20.9	6.74	6.74	-0.37	17	33	25.32	11	4	15.2	45.2
175.0	26.5	6.98	7.01	-0.37	10	30	25.99	10	4	15.1	44.4
200.0	31.4	7.24	7.20	-0.15	17	28	27.15	23	6	15.2	43.7
218.0	35.2	7.40	7.34	-1.10	13	50	28.06	23	6	15.5	43.3
225.0	37.0	7.46	7.39	-1.35	12	50	28.45	23	6	15.5	43.1
250.0	43.8	7.57	7.56	-1.40	12	49	29.76	24	6	15.5	42.7
300.0	58.6	7.88	7.87	-1.68	11	45	32.97	24	6	16.1	41.9
400.0	102.2	8.31	8.30	-1.69	8	49	37.72	24	6	17.0	40.8

H.B. Fleming
Barton, VT

24-Apr-2015
GRLWEAP (TM) Version 2005

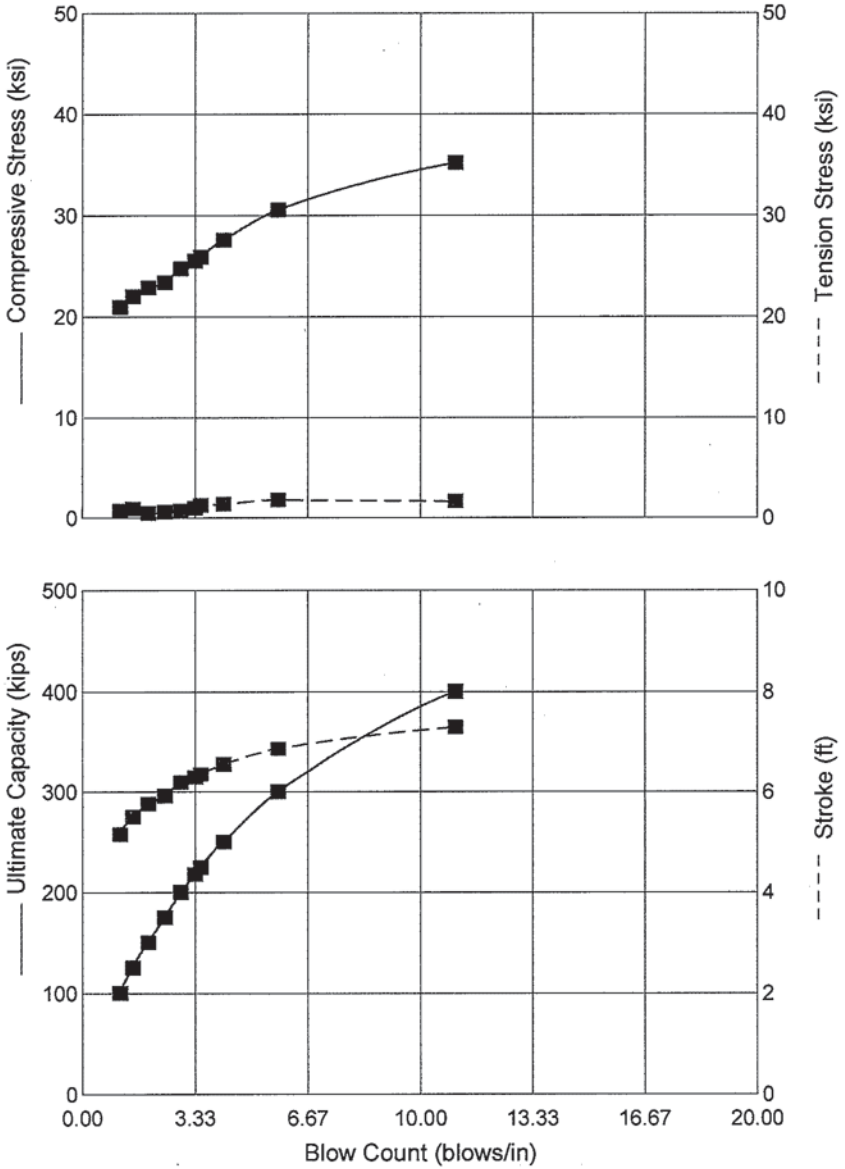

APE D 19-42

Efficiency	0.660	
Helmet	1.20	kips
Hammer Cushion	40399	kips/in
Skin Quake	0.100	in
Toe Quake	0.040	in
Skin Damping	0.050	sec/ft
Toe Damping	0.150	sec/ft
Pile Length	80.00	ft
Pile Penetration	78.00	ft
Pile Top Area	18.40	in2

Pile Model

Skin Friction Distribution

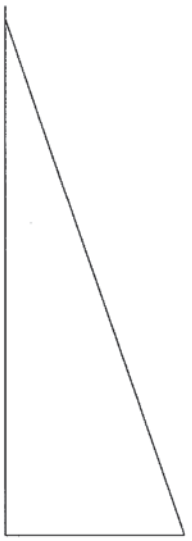

Res. Shaft = 20 %
(Proportional)

APE D19-42

APE D19-42

H.B. Fleming
Barton, VT

24-Apr-2015
GRLWEAP (TM) Version 2005

Ultimate Capacity kips	Maximum Compression Stress ksi	Maximum Tension Stress ksi	Blow Count blows/in	Stroke ft	Energy kips-ft
100.0	20.94	0.73	1.1	5.15	13.45
125.0	22.03	0.92	1.5	5.50	13.14
150.0	22.87	0.47	1.9	5.76	12.89
175.0	23.38	0.59	2.4	5.92	12.65
200.0	24.74	0.70	2.9	6.19	12.95
218.0	25.49	0.97	3.3	6.29	13.04
225.0	25.89	1.27	3.5	6.35	13.11
250.0	27.56	1.38	4.2	6.55	13.39
300.0	30.54	1.79	5.8	6.86	14.04
400.0	35.15	1.66	11.0	7.30	14.83

APE D19-42

```
OUT OSG HAM STR FUL PEL  N SPL N-U P-D %SK ISM  0 PHI RSA ITR H-D MXT     DEx
  6  0 571  0  1  0 0  0  0  0 20  0 0  0  0  0  0  0  0.000
   Pile g  Hammer g  Toe Area Pile Size        Pile Type
   32.170   32.170  144.000   12.000          Unknown
    W Cp     A Cp     E Cp     T Cp      CoR     ROut     StCp
   1.200  283.500    285.0    2.000    0.800    0.010      0.0
    A Cu     E Cu     T Cu      CoR     ROut     StCu
   0.000      0.0    0.000    0.000    0.000      0.0
    LPle     APle     EPle     WPle     Peri     Strg      CoR     ROut
  80.000   18.400 30000.000  492.000    4.000   36.000    0.850    0.010
 Manufac  Hmr Name  HmrType No Seg-s
 APE     D 19-42        1       5
   Ram Wt    Ram L  Ram Dia  MaxStrk  RtdStrk   Efficy
    4.19   128.00    12.60    12.50    11.25     0.80
   IB. Wt    IB. L   IB.Dia   IB CoR    IB RO
    0.75    25.30    12.60    0.900    0.010
 CompStrk A Chamber V Chamber  C Delay  C Duratn Exp Coeff VolCStart  Vol CEnd
   15.50   124.70   157.68    0.001    0.002    1.250     0.00     0.00
   P atm      P1       P2       P3       P4       P5
   14.70  1710.00  1539.00  1385.00  1247.00     0.00
   Stroke   Effic.  Pressure  R-Weight  T-Delay Exp-Coeff  Eps-Str  Total-AW
  10.0000   0.6600 1316.0000   0.0000   0.0000   0.0000   0.0100   0.0000
     Qs       Qt       Js       Jt       Qx       Jx     Rati     Dept
   0.100    0.040    0.050    0.150    0.000    0.000    0.000    0.000
 Research Soil Model: Atoe, Plug,  Gap, Q-fac
   0.000    0.000    0.000    0.000
 Research Soil Model: RD-skn: m, d, toe: m, d
   0.000    0.000    0.000    0.000
 Res. Distribution
   Dpth   Rskn   Dpth   Dpth
   0.00   0.00  78.00  78.00   0.00   0.00   0.00   0.00   0.00   0.00
   0.00   0.00   0.00   0.00   0.00   0.00   0.00   0.00   0.00   0.00
  78.00   1.95   0.00   0.00   0.00   0.00   0.00   0.00   0.00   0.00
  78.00   1.95   0.00   0.00   0.00   0.00   0.00   0.00   0.00   0.00
  80.00   2.00   0.00   0.00   0.00   0.00   0.00   0.00   0.00   0.00
 Rult
  100.0  125.0  150.0  175.0  200.0  218.0  225.0  250.0  300.0  400.0
 Diameter COGHammer  WHammer  ABatter Depth Sup     Flag
   0.000    0.000    0.000    0.000    0.000        0
```

APE D19-42

Hammer Model: D 19-42 Made by: APE

No.	Weight kips	Stiffn k/inch	CoR ft	C-Slk k/ft/s	Dampg
1	0.838				
2	0.838	141250.2	1.000	0.0100	
3	0.838	141250.2	1.000	0.0100	
4	0.838	141250.2	1.000	0.0100	
5	0.838	141250.2	1.000	0.0100	
Imp Block	0.754	71041.4	0.900	0.0100	
Helmet	1.200	40398.8	0.800	0.0100	6.0
Combined Pile Top		13800.0			

HAMMER OPTIONS:

Hammer File ID No. 571 Hammer Type OE Diesel
Stroke Option FxdP-VarS Stroke Convergence Crit. 0.010
Fuel Pump Setting Maximum

HAMMER DATA:

Ram Weight (kips) 4.19 Ram Length (inch) 128.00
Maximum Stroke (ft) 12.50
Rated Stroke (ft) 11.25 Efficiency 0.660

Maximum Pressure (psi) 1710.00 Actual Pressure (psi) 1316.00
Compression Exponent 1.350 Expansion Exponent 1.250
Ram Diameter (inch) 12.60
Combustion Delay (s) 0.00100 Ignition Duration (s) 0.00200

HAMMER CUSHION			PILE CUSHION		
Cross Sect. Area	(in2)	283.50	Cross Sect. Area	(in2)	0.00
Elastic-Modulus	(ksi)	285.0	Elastic-Modulus	(ksi)	0.0
Thickness	(inch)	2.00	Thickness	(inch)	0.00
Coeff of Restitution		0.8	Coeff of Restitution		0.0
RoundOut	(ft)	0.0	RoundOut	(ft)	0.0
Stiffness	(kips/in)	40398.8	Stiffness	(kips/in)	0.0

PILE PROFILE:

Toe Area (in2) 144.000 Pile Type Unknown
Pile Size (inch) 12.000

L b Top ft	Area in2	E-Mod ksi	Spec Wt lb/ft3	Perim ft	Strength ksi	Wave Sp ft/s	EA/c k/ft/s
0.0	18.40	30000.	492.0	4.0	36.000	16807.	32.8
80.0	18.40	30000.	492.0	4.0	36.000	16807.	32.8

Wave Travel Time 2L/c (ms) 9.520

APE D19-42

Rut= 218.0, Rtoe = 174.4 kips, Time Inc. =0.077 ms

No	mxTForce	t	mxCForce	t	mxTStrss	t	mxCStrss	t	max V	t	max D	t	max Et
	kips	ms	kips	ms	ksi	ms	ksi	ms	ft/s	ms	inch	ms	kip-ft
1	0.0	0	437.6	2	0.00	0	23.78	2	12.55	2	0.669	12	13.04
2	-3.0	50	441.9	2	-0.16	50	24.02	2	12.60	2	0.656	12	12.95
3	-6.1	50	444.7	2	-0.33	50	24.17	2	12.64	2	0.642	12	12.85
4	-8.9	50	446.0	2	-0.48	50	24.24	2	12.64	2	0.629	12	12.73
5	-11.2	50	448.0	2	-0.61	50	24.35	2	12.61	3	0.615	13	12.59
6	-13.1	50	449.5	3	-0.71	50	24.43	3	12.60	3	0.601	13	12.44
7	-14.7	50	450.0	3	-0.80	50	24.46	3	12.58	3	0.586	13	12.29
8	-15.9	50	449.6	3	-0.86	50	24.44	3	12.54	3	0.572	13	12.12
9	-16.8	50	450.6	3	-0.91	50	24.49	3	12.47	3	0.558	13	11.94
10	-17.4	50	450.6	4	-0.95	50	24.49	4	12.44	4	0.543	13	11.76
11	-17.8	50	449.7	4	-0.97	50	24.44	4	12.38	4	0.529	13	11.57
12	-17.9	50	449.6	4	-0.97	50	24.43	4	12.28	4	0.515	13	11.38
13	-17.8	50	449.3	4	-0.97	50	24.42	4	12.23	4	0.501	13	11.18
14	-17.3	50	448.0	4	-0.94	50	24.35	4	12.15	4	0.487	13	10.97
15	-16.3	50	447.1	5	-0.88	50	24.30	5	12.03	5	0.473	13	10.77
16	-14.3	50	446.6	5	-0.78	50	24.27	5	11.96	5	0.459	13	10.56
17	-11.2	50	445.2	5	-0.61	50	24.19	5	11.85	5	0.445	13	10.34
18	-9.2	50	443.9	5	-0.50	50	24.13	5	11.71	5	0.431	14	10.13
19	-8.4	49	443.3	5	-0.46	49	24.09	5	11.62	6	0.418	14	9.91
20	-7.7	49	441.6	6	-0.42	49	24.00	6	11.50	6	0.404	14	9.70
21	-6.7	49	439.2	6	-0.37	49	23.87	6	11.41	6	0.391	14	9.49
22	-5.4	49	437.2	6	-0.30	49	23.76	6	11.12	6	0.378	14	9.27
23	-4.0	49	469.1	6	-0.22	49	25.49	6	9.84	6	0.365	14	9.07
24	-2.3	48	467.4	6	-0.13	48	25.40	6	10.49	7	0.352	15	8.92

(Eq) Strokes Analyzed and Last Return (ft):
10.00 6.36 6.29 6.29

Max. Combustion Pressure 1316.0 psi

Rut	Bl Ct	Stroke (ft)		Ten Str	i	t	Comp Str	i	t	ENTHRU	Bl Rt
kips	b/ft	down	up	ksi			ksi			kip-ft	b/min
100.0	13.4	5.15	5.16	-0.73	20	42	20.94	19	6	13.5	51.7
125.0	17.9	5.50	5.47	-0.92	9	34	22.03	13	4	13.1	50.2
150.0	23.4	5.76	5.74	-0.47	10	31	22.87	12	4	12.9	49.0
175.0	29.3	5.92	5.98	-0.59	10	29	23.38	10	4	12.6	48.2
200.0	34.9	6.19	6.16	-0.70	12	27	24.74	23	6	12.9	47.3
218.0	40.0	6.29	6.29	-0.97	12	50	25.49	23	6	13.0	46.8
225.0	42.0	6.35	6.35	-1.27	12	50	25.89	24	6	13.1	46.6
250.0	50.1	6.55	6.55	-1.38	13	49	27.56	24	6	13.4	45.9
300.0	69.5	6.86	6.85	-1.79	9	22	30.54	24	6	14.0	44.9
400.0	132.5	7.30	7.27	-1.66	10	44	35.15	24	6	14.8	43.6