CONTECH®
ENGINEERED SOLUTIONS

CON/SPAN O-SERIES, REACTIONS, HEADWALLS & WINGWALLS CALCULATIONS

CON SPAN
O-SERIES

CONTECH PROJECT #468920-010

US ROUTE 2
BRIDGE NO. 126
TOWN OF LUNENBURG
ESSEX COUNTY, VERMONT

Vermont Agency of Transportation
RECEIVED
ON: March 29, 2016
and Checked for
CONFORMANCE
BY: Danny Landry DATE: 04apr16

SHOP DRAWING REVIEW

☐ REVIEWED AS REQUIRED BY THE CONSTRUCTION CONTRACT DOCUMENTS AND APPROVED, BUT ONLY FOR CONFORMANCE TO THE DESIGN CONCEPT OF THE WORK, AND SUBJECT TO FURTHER LIMITATIONS AND REQUIREMENTS CONTAINED IN THE CONSTRUCTION CONTRACT DOCUMENTS.

☐ REJECTED ☒ REVISE AND RESUBMIT ☐ APPROVED AS NOTED

CORRECTIONS OR COMMENTS MADE ON THE SHOP DRAWINGS DURING THIS REVIEW DO NOT RELIEVE CONTRACTOR FROM COMPLIANCEWITH REQUIREMENTS OF THE DRAWINGS AND SPECIFICATIONS. THIS CHECK IS ONLY FOR REVIEW OF GENERAL CONFORMANCE WITH THE DESIGN CONCEPT OF THE PROJECT AND GENERAL COMPLIANCE WITH THE INFORMATION GIVEN IN THE CONTRACT DOCUMENTS. THE CONTRACTOR IS RESPOINSIBLE FOR: CONFIRMING AND CORRELATING ALL QUANTITIES AND DIMENSIONS: SELECTING FABRICATION PROCESSES AND TECHNIQUES OF CONSTRUCTION: COORDINATING THEIR WORK WITH THAT OF ALL OTHER TRADES: AND PERFORMING THEIR WORK IN A SAFE AND SATISFACTORY MANNER.

CLD Consulting Engineers
540 Commercial Street
Manchester, NH 03101
603-668-8223

Job Number: 120106
Reviewed by: NDC
Date: 3/29/16
3/29/16

STATE OF VERMONT
PHILIP A. CREAMER
NO. 9278
Civil
LICENSED
PROFESSIONAL ENGINEER

REVISION DATE: March 15, 2016

DESIGN CALCULATIONS INDEX

Bid Plan Variation Summary 3

Arch Unit Calculations

Letters of Recommendation 8

Calculation and Summary of Finite Element Input Data 11

Design Calculations and Summary of Stresses 15

Graphic Display of Finite Element Input 17

Graphic Display of Finite Element Output 22

Appendix A (CANDE Program Output) 25

Part a) Controlling Case for Maximum Positive Moment & Maximum Shear 28

Part b) Controlling Case for Maximum Negative Moment 85

Headwall Calculations 91

Wingwall Calculations 103

Superior Concrete

982 Minot Ave, Auburn, ME 04210
PH: 207-784-1388 FX: 207-783-4039

Project:
Client:

Design: 5000psi
Description: Prestress, w/19% Slag

Weights and Supplier Information

Type III Cement	Dragon Products Thomaston, ME	650 lbs
Slag	Dragon Products Thomaston, ME	150 lbs
Stone	Pike Industries Poland, ME	1550 lbs
Sand	Pike Industries Varney Mills, ME	1231 lbs
Water	Auburn Water District	272 lbs
Air Entrainment	BASF - Master Air AE200	9.0-5.0 %
HRWR	BASF - Master Glenium 7620	2-12 oz/cwt
Water - Cement Ratio		0.34 (0.40 Max)

Notes: Aggregate weights are SSD; Spread 25" +/- 3"; Unit Weight 142.6pcf

```
==========================================================================
Call st.            1                    Mixer no.          1
Date                01/29/2016           Starting time      12:39:24
Quantity            2.40                 Recipe no          9
Order               prestress
temperature mixer:   81.0
auto moist. cor.    Y
Mixing time (dry/wet/complete) : 15 / 120 / 320 sec.

targ.  act.  moi.  targ.  act.  moi.  targ.  act.  moi.  targ.  act.  moi.
--------------------------------------------------------------------------
3/4" PIKE           3/4" PIKE2          FINE AGG            FINE AGG2
01879 *01860 001.0 01879 *01895 001.0 01525 *01530 003.1 01530 *01515 003.5
DRAG III 2          SLAG
01560 *01574        00360 *00362
WATER 1
00462  00468
AIR/510130          7620                CNI/510170
00005  00004        00115  00115        00922  00922
* = tolerance error
w/c ratio (tar./act.)  0.380 / 0.313

==========================================================================
Call st.            1                    Mixer no.          1
Date                01/29/2016           Starting time      12:57:12
Quantity            2.40                 Recipe no          9
Order               prestress
temperature mixer:   84.0
auto moist. cor.    Y                    manually interrupted
Mixing time (dry/wet/complete) : 15 / 120 / 550 sec.

targ.  act.  moi.  targ.  act.  moi.  targ.  act.  moi.  targ.  act.  moi.
--------------------------------------------------------------------------
3/4" PIKE           3/4" PIKE2          FINE AGG            FINE AGG2
01879  01880 001.0 01879 *01885 001.0 01530 *01555 003.4 01530 *01510 003.5
DRAG III 2          SLAG
01560 *01578        00360  00360
WATER 1
00457  00462
AIR/510130          7620                CNI/510170
00002 *00000        00115 *00000        00922 *00000
* = tolerance error
w/c ratio (tar./act.)  0.380 / 0.312

==========================================================================
Call st.            1                    Mixer no.          1
Date                01/29/2016           Starting time      13:22:29
Quantity            2.40                 Recipe no          9
Order               prestress
temperature mixer:   84.0
auto moist. cor.    Y                    manually interrupted
Mixing time (dry/wet/complete) : 15 / 120 / 294 sec.

targ.  act.  moi.  targ.  act.  moi.  targ.  act.  moi.  targ.  act.  moi.
--------------------------------------------------------------------------
3/4" PIKE           3/4" PIKE2          FINE AGG            FINE AGG2
01879 *01840 001.0 01879 *01865 001.0 01525 *01500 003.1 01528 *01510 003.4
DRAG III 2          SLAG
01560 *01576        00360 *00364
WATER 1
00464  00468
AIR/510130          7620                CNI/510170
00005  00004        00115  00115        00922  00922
* = tolerance error
```

W/C = .336

US Rt. 2 Bridge No. 126 – Bid Plan Variations

Proposed Alternate Structure – CON/SPAN O-Series 20’ Span x 9’-3½” Rise

Per Bid Plan Sheet 10 of 74, Note 47, arch and wingwall foundation loads provided as required.

> Arch Foundation Loads – See following sheets for foundation loads based on bid plan shape and elevation and proposed O-Series shape and elevation.
>
> Wingwall Loads to Foundation – See following sheet. Both vertical and horizontal loads are transferred to cast-in-place pedestal wall. Wall loads do not include hydrostatic pressure or uplift from ground water.

Waterway Opening - See following sheets for waterway opening based on bid plan shape and elevation and proposed O-Series shape and elevation.

Arch Joint Detail – Sheet 43 of 74 of the bid show arch joint detail that includes bell and spigot joint and connecting rods. These details are not typical or necessary for 3-sided arch culverts on continuous foundations. Standard three-sided structure joint details are included in the submittal drawings.

LRFD BRIDGE REACTIONS

JOB #: 468920
NAME: US Rt 2 Bridge No. 126 (Structure Per Bid Plans)
DATE: 15-Dec-15
BY: XXX

LOADS:

cover, at structure center	**15.1 ft, max**	Vertical load, per leg, R_v (Self Weight), DC	**2.3 k/f**
bridge span	**20 ft**	Vertical load, per leg, R_v (Self Weight + Earth Cover), DC+EV	**28.9 k/f**
bridge rise	**7.0 ft**	Vertical load, per leg, R_v (Self Weight + Earth Cover + LL), DC+EV+LL	**30.1 k/f**
live load	**HL-93**	Vertical load, per leg, R_h (Future Wearing Surface, if applicable), DW	**0.0 k/f**
		Horizontal load, per leg, R_h (Self Weight), DC	**0.7 k/f**
		Horizontal load, per leg, R_h (Self Weight + Earth Cover), DC+EH	**7.2 k/f**
		Horizontal load, per leg, R_h (Self Weight + Earth Cover + LL), DC+EH+LL	**7.4 k/f**
		Horizontal load, per leg, R_h (Future Wearing Surface, if applicable), DW	**0.0 k/f**

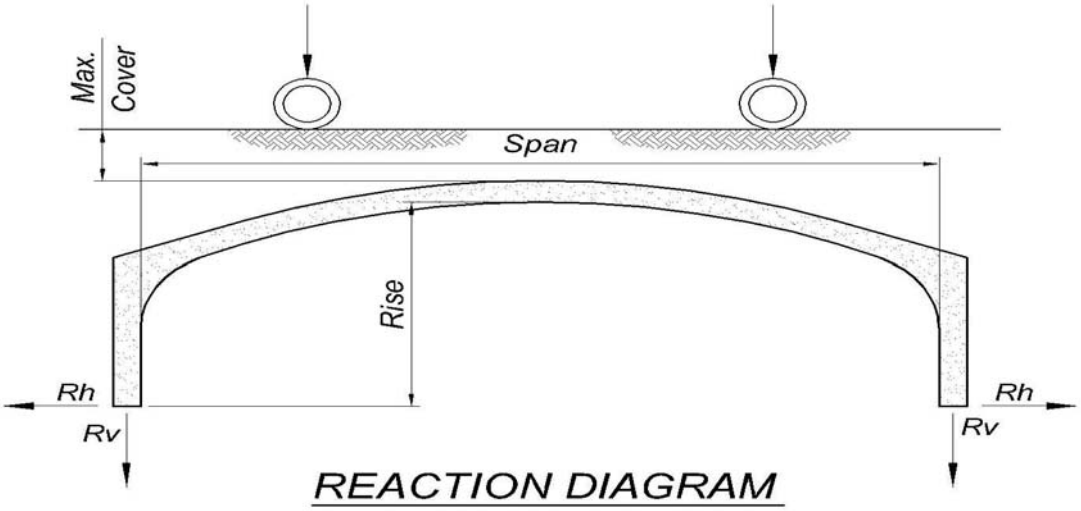

Notes:
1) Axle load positions are varied to produce critical reactions shown here.
2) Reactions are unfactored loads.
3) Impact is not included.
4) Units are kips/ft.
5) Soil Weight = 125 pcf.
6) Reactions are based on shallow foundations.

CON/SPAN O-SERIES REACTIONS

JOB #: 468920
NAME: US Route 2
DATE: 9-Dec-15
BY: KDK

BRIDGE DATA:

Bridge type = **CON/SPAN O-SERIES**

cover, at structure center =	13.00 ft, max
Shape ID	O120
bridge span =	20 ft
bridge rise =	9.3 ft
live load =	HL93

LOADS:

vertical load (arch dead load only), per leg, RvDLarch	1.7 k/f
vertical load (dead load), per leg, RvDL	24.5 k/f
vertical load (dead + live load), per leg, RvDL+LL	26.1 k/f
horizontal load (arch dead load), per leg, RhDLarch	0.8 k/f
horizontal load (dead load), per leg, RhDL	7.0 k/f
horizontal load (dead + live load), per leg, RhDL+LL	8.0 k/f

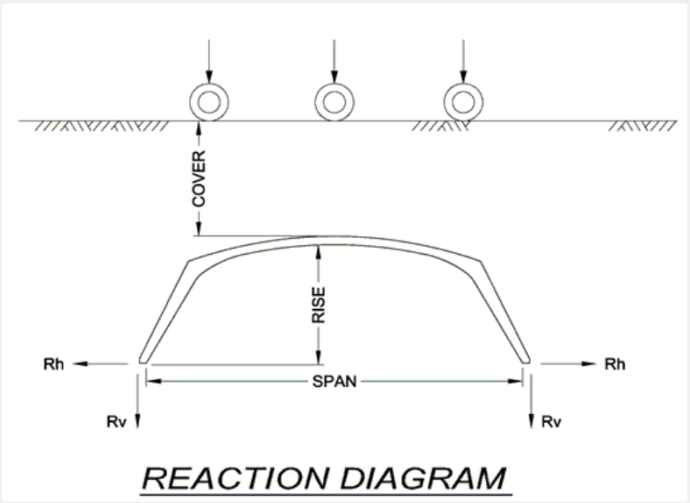

Notes:
1) Axle load positions are varied to produce critical reactions shown here.
2) Reactions are unfactored loads.
3) Impact is not included.
4) Units are kips/ft.
5) Soil Weight = 125 pcf.
6) reactions are based on spread foundations.

PROJECT NUMBER: 468920
PROJECT NAME: US ROUTE 2
DATE: Dec 9, 2015
BY: KDK

HITEC-METHOD LRFD WINGWALL REACTIONS

				REACTIONS								
				UNFACTORED			*FACTORED (Stability/Eccentricity)*			*FACTORED (Bearing)*		
Wingwall Name	Anchor No.	Anchor Type	Anchor Length (beyond Wingwall) (ft)	Vertical (k/ft)	Horizontal (k/ft)	Location of Resultant force from front face of wingwall (ft)	Vertical (k/ft)	Horizontal (k/ft)	Location of Resultant force from front face of wingwall (ft)	Vertical (k/ft)	Horizontal (k/ft)	Location of Resultant force from front face of wingwall (ft)
WW1	1	B	4.04	4.17	0.46	2.32	5.55	0.41	1.92	5.54	0.69	2.32
WW2	2	A	3.18	2.07	0.55	1.47	2.06	0.82	0.94	2.06	0.82	1.29
	3	B	4.04	3.94	1.22	1.36	3.92	1.84	0.54	5.26	1.84	6.74
	4	C	5.04	7.28	2.51	1.50	7.42	3.77	0.43	9.48	2.26	1.94
	5	D	6.04	11.51	4.29	1.61	11.92	6.43	0.30	11.92	6.43	0.87
WW3	6	D	6.04	9.74	3.43	2.02	9.98	5.14	0.79	12.65	3.08	2.49
	7	E	7.04	12.99	4.61	2.39	13.42	6.92	1.01	16.84	4.15	2.91
	8	E	7.04	14.61	5.56	2.11	15.19	8.34	0.65	19.77	8.34	1.94
WW4	9	A	3.18	1.71	0.41	1.55	1.69	0.62	1.05	1.69	0.62	1.40
	10	B	4.04	2.78	0.72	1.61	2.72	1.08	0.91	2.72	1.08	1.34
	11	B	4.04	3.82	1.17	1.39	3.80	1.75	0.58	5.10	1.75	1.31
	12	B	4.04	4.92	1.73	1.11	4.95	2.59	0.17	4.79	1.56	1.23

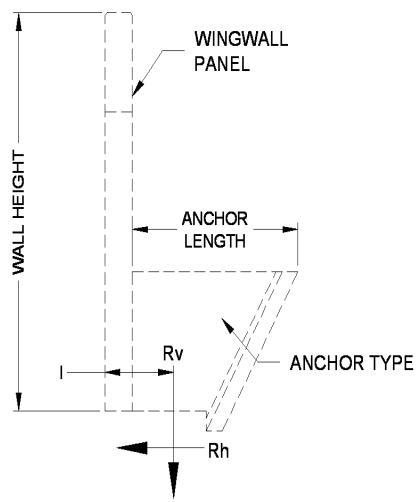

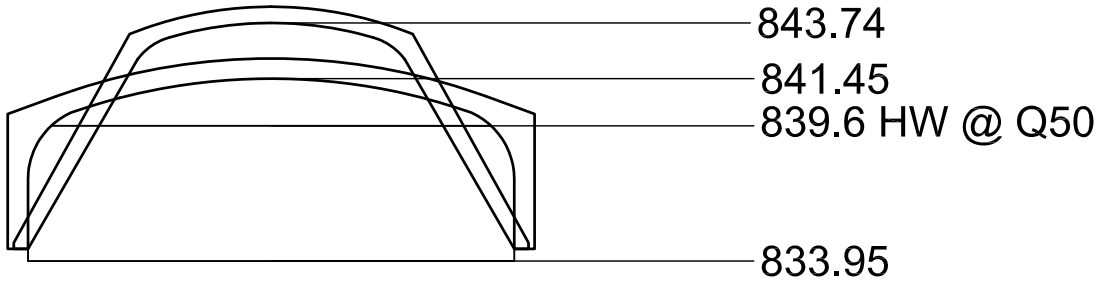

TOTAL WATERWAY
135 sq. ft

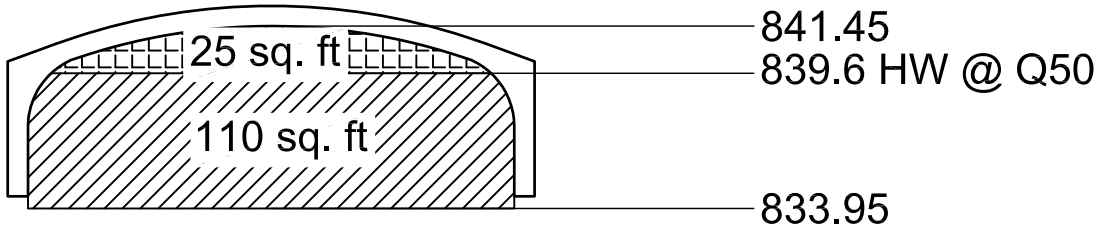

TOTAL WATERWAY
143 sq. ft

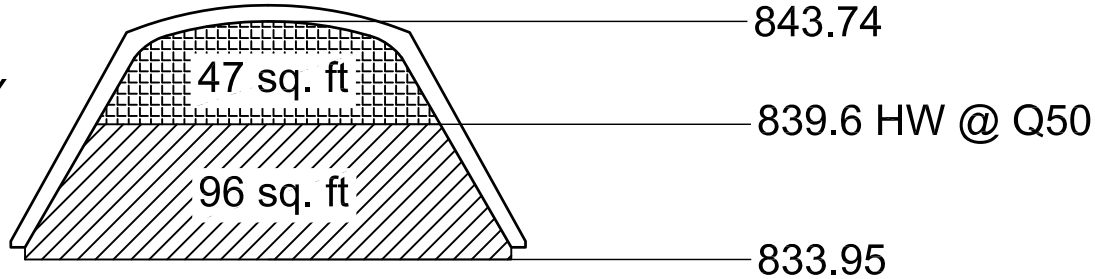

9025 Centre Pointe Drive, Suite 400
West Chester, Ohio 45069
(513) 645-7000
(800) 344-2102
Fax: (513) 645-7993
www.contech-cpi.com

Review of CON/SPAN O-SERIES Bridge Design Procedure

The first step in a design, assuming the span, rise, and cover given, is to determine the lateral distribution of the live load per AASHTO specifications. The assumed width of the structure is one inch for analysis purposes. The load is then applied as a concentrated load at various nodes along the span of the structure.

The tool used for analysis of the soil-structure interaction is the CANDE program. A distinct mesh is developed for each span and changed accordingly for the various rises and heights of cover. All live loads and the weight of cover material are input as factored loads so that the design is an ultimate design check. The final computed safety factors are compared to the reciprocal of the ϕ factors used in ultimate design.

The CANDE program describes a structure surrounded by the soil elements. The analysis is an iterative process modeling the various stages of construction. The soil descriptions used are an inelastic model as developed by Duncan. The actual description of the soil model used in our typical analysis is described in the enclosed recommendation by Dr. Michael Katona a nationally recognized expert in the field of soil structure interaction. These recommendations are based on our specific application and specifications.

The CON/SPAN O-SERIES has already demonstrated many times over its usefulness and economy. We hope that you will have time to review our design calculations and comment accordingly.

August 10, 1987

Mr. William Lockwood
CON/SPAN® Bridge Systems
1563 East Dorothy Lane
Dayton, Ohio 45429

Dear Bill:

After thoroughly reviewing all structural design aspects of your CON/SPAN® Bridge Systems, I am confident that the design concept is well conceived and provides a safe and structurally robust installation.

My judgment is based on a complete review of the CON/SPAN® specification documents, the CANDE design/analysis procedure, and the full scale experimental load test which demonstrated an ultimate strength several times larger than the design load.

For the record my credentials include: Chairman of the Transportation Research Board Committee on Subsurface Soil-Structure Interaction, developer of the well known CANDE Computer program for culvert design, and author of numerous journal papers on culvert design and analysis.

Sincerely:

Michael G. Katona

Dr. Michael G. Katona

IV. COMMENTS ON DESIGN/ANALYSIS PROCEDURES WITH CANDE

Soil Models – As a general rule of thumb, I recommend using the Duncan soil model for fill materials and elastic models for undisturbed soils. The latter category is very difficult to pin down because of the wide variety of insitu conditions that are in existence. A nominal Young's modulus of 2000 psi is a typical value, but this must be tempered with engineering judgment. Fill materials should be structural-quality select materials, preferably granular. The Duncan model SM100* represents a conservative approximation of a well compacted (100% AASHTO T-99) granular material with good gradation. Based on the compaction requirements set forth in your specifications for backfill, I think you could adopt the SM100 as your design standard to characterize the backfill along the sides of your arch. Soil over the crown acts mainly as a load and is not as structurally significant as the side soil. Generally, soil cover may be modeled as SM90.

Revised by CON/SPAN® Bridge Systems 11/4/93

* Currently, the soil model ML95 is used to coincide with our backfill specifications. This results in a more conservative approach than using the soil model SM100.

LRFD DESIGN SUMMARY

PROJECT INFORMATION

Project Number: 468920-010
Date: 11/12/2015
By: KDK

CULVERT CONFIGURATION

Span: 20'-0"
Rise: 9'-3 5/8"
Cover: 2'-0" min. to 13'-0" max.

DESIGN SPECIFICATIONS

AASHTO LRFD SPECIFICATIONS CURRENT EDITION

DESIGN LOADING

HL93

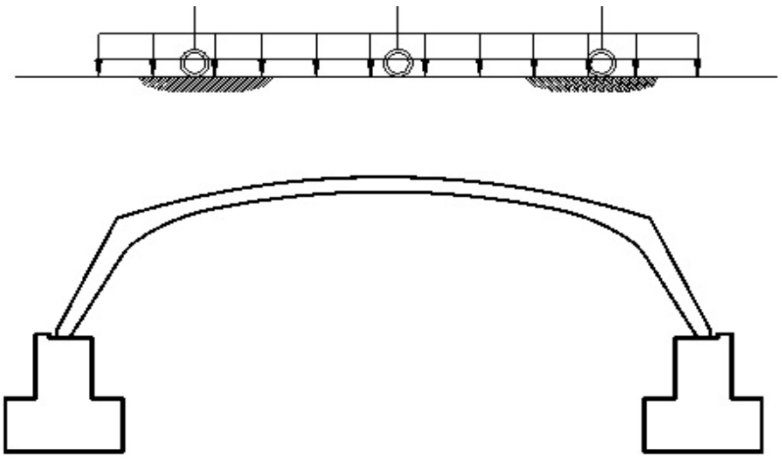

US ROUTE 2
BRIDGE NO. 126
TOWN OF LUNENBURG
ESSEX COUNTY, VERMONT

TABLE OF CONTENTS

Letter of Recommendation

Design Calculations

Shop Drawing

Graphic Display of Mesh Elements
- Nodal Points
- Structural Elements

Graphic Display of Moment, Shear and Thrust Diagrams

CANDE Program Analysis

Appendix A:
- Part a) Maximum Positive Moment & Maximum Shear
- Part b) Maximum Negative Moment

CONFIGURATION

Span: 20'-0"
Rise: 9'-3 5/8"
Cover: 2'-0" min. to 13'-0" max.

DESIGN LOADING

HL93

DESIGN SPECIFICATIONS

AASHTO LRFD SPECIFICATIONS
CURRENT EDITION

MATERIALS

Concrete: f'c = 5,000 psi
WWF Reinforcing: fy= 65,000 psi

SOILS

In Situ:
Youngs Modulus*= 3000-8000 psi
Unit Weight

Backfill
Selig ML95
Unit Weight = 125 pcf

Cover
Duncan SM90
Unit Weight = 125 pcf

*In situ modulus varies with depth to model confined soil behavior. Soil modulus increases with increasing depth of fill.

IMPACT

Per AASHTO Section 3.6.2.2
Impact = 33 (1.0 - 0.125 De) > 0%
De = Cover (feet)

LOAD FACTORS (γ)

Value should be 1.25 per AASHTO

Dead Load = 1.3
Live Load = 1.75
Redundancy (Dead Load Only) = 1.05

LFRD DISTRIBUTION OF WHEEL LOADS

For cover less than 2'-0", live load shall be distributed per 4.6.2.10
EL = 96 + 1.44 (S) < 2 Times Unit Width
S = Span (feet)
For covers greater than 2'-0", loads are distributed per 3.6.1.2.6
ED = tire area + 1.15H

Whereas such areas overlap, the total load shall be uniformly distributed over the area.
For Cover > 8'-0" & Cover Height > Span, Live Load not applied per AASHTO Section 3.6.1.2.6

A Multiple Presence Factor (MPF) shall be included on axle loads per Section 3.6.1.1.2

NOMENCLATURE

EL = length of lateral distribution ≤ 2'-0" Cover
ED = length of lateral distribution > 2'-0" Cover
W = line load per unit length
P = axle or wheel loads
H = height of cover (feet)

CONTROLLING CASES

Case 1

Maximum Positive Moment & Maximum Shear
HL93, 13'-0" Cover

Case 2

Maximum Negative Moment
HL93, 2'-0" Cover

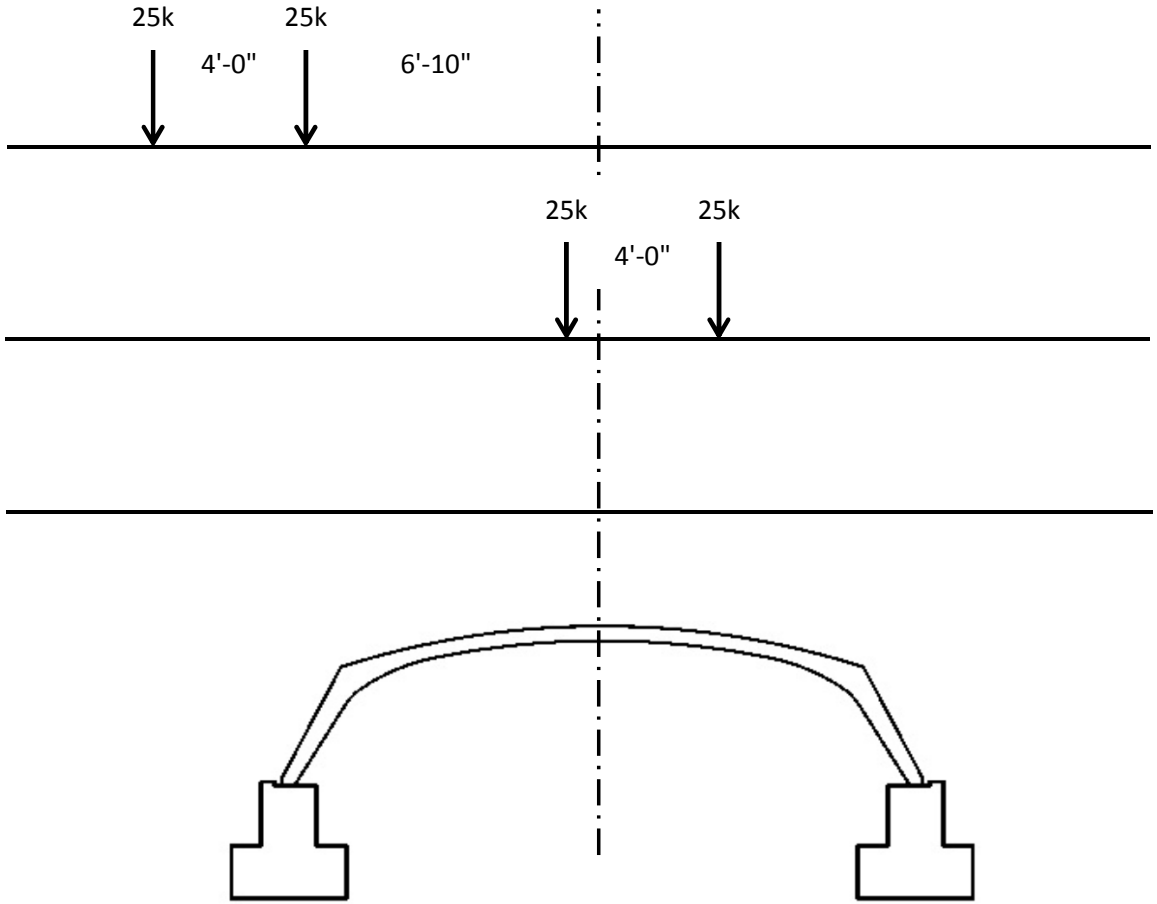

BRIDGE ELEVATION

NOTE: The load cases shown above are the controlling cases for maximum moments and shears determined by varying the load locations across the span and/or rise.

CONTECH ENGINEERED SOLUTIONS	**US ROUTE 2** **BRIDGE NO. 126** **TOWN OF LUNENBURG** **ESSEX COUNTY, VERMONT**	PROJECT No.: 468920-010 DRAWN: KDK CHECKED: PAC DATE: 11/12/2015	SHEET No. 2/6

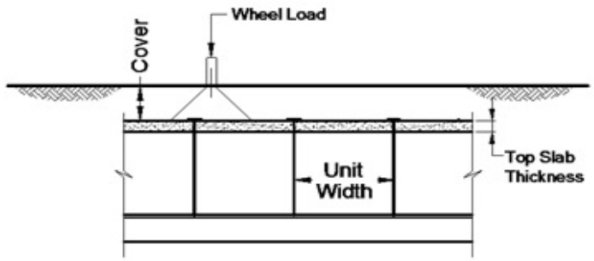

BRIDGE PROFILE

LRFD DISTRIBUTION WIDTH

The calculation shown below is for HL93 live load and 2'-0" cover at the centerline of the structure.

ED = 1.15 Cover + tire width
ED = 1.15 * (2) + 20"
ED = 3.97'
EDcontrolling = 3.97'

EL = 96 + 1.44 Span
EL = 96 + 1.44 * (20)
EL= 10.4'
ELcontrolling = 10.4'

LIVE LOAD CALCULATION

IM= 0.33(1.0-0.125(2')) = 0.25
PD = γ (wheel load)*(1+IM)*(MPF)
PD = (1.75)*12.5*(1 + 0.25)*(1.2)
PD = 32.75 kips
WD = PD/ED = 8.26 k/ft

PL = γ (axle load)*(1+IM)*(MPF)
PL = (1.75)*25*(1 + 0.25)*(1.2)
PL = 65.49 kips
WL = PL/EL = 6.3 k/ft

Wcontrolling = 6.3 k/ft

LANE LOAD CALCULATION

Lane Width = 10 ft
Lane Load = 64 psf (10 ft) = 640 lbs/ft
Pult = (1.75)(0.640 k/ft)
Pult = 1.12 k/ft
Wult = 1.12/10 k/ft²
Wult = 0.112 k/ft²

MINIMUM REINFORCEMENT

Flexural Reinforcement: Asmin = 0.002(Agross)
(AASHTO Section 12.14.5.8)
Asmin = 0.002(12)(8) in²/ft
Asmin =0.192 in²/ft
Temperature & Shrinkage:
Asmin = 0.125 in²/ft each face

CONTECH ENGINEERED SOLUTIONS	US ROUTE 2 BRIDGE NO. 126 TOWN OF LUNENBURG ESSEX COUNTY, VERMONT	PROJECT No.: 468920-010 DRAWN: KDK CHECKED: PAC DATE: 11/12/2015	SHEET No. 3/6

LRFD CHECK CRACK CONTROL

$f_s = 700\gamma_e/\beta_s(S+2d_c) < 0.6(f_y)$ AASHTO (5.7.3.4)

$\beta_s = 1 + d_c / 0.7(h-d_c)$

Notations:

γ_e = exposure factor

d_c = thickness of concrete cover measured from extreme tension fiber to center of closest bar or wire. (in.)

h = overall thickness or depth (in.)

s = spacing of reinforcement (in.)

AT MIDSPAN

dc = 1.63 in.

h = 8.00 in.

s = 2

βs = 1.36

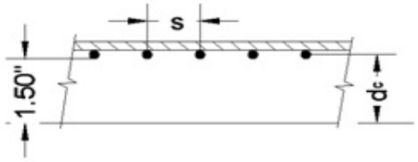

POSITIVE MOMENT REINFORCEMENT

fs = 700*0.75/1.36(2+2(1.63)) < 0.6(65 ksi)

fs = 73.26 ksi > 39 ksi (39 ksi Controls)

AT HAUNCH

dc = 2.14 in.

h = 7.00 in.

s = 2

βs = 1.63

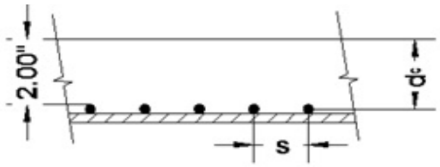

NEGATIVE MOMENT REINFORCEMENT

fs = 700*0.75/1.63(2+2(2.14)) < 0.6(fy)

fs = 51.38 ksi > 39 ksi (39 ksi Controls)

FROM NON-FACTORED ANALYSIS (SERVICE LOADS)

fs,midspan = 31.8 ksi OK

fs,haunch = 2.2 ksi OK

CONTECH ENGINEERED SOLUTIONS	US ROUTE 2 BRIDGE NO. 126 TOWN OF LUNENBURG ESSEX COUNTY, VERMONT	PROJECT No.: 468920-010 DRAWN: KDK CHECKED: PAC DATE: 11/12/2015	SHEET No. 4/6

LRFD FACTORED LOAD CHECK

Strength Reduction Factors (AASHTO Section 12.5.5)

φ = .95 for Combined Flexure & Thrust
φ = .90 for Shear

MAXIMUM POSITIVE MOMENT STEEL STRESS UNDER FACTORED LOADS:

fs(+) = 42.6 ksi
fs(+) < φFy = 0.95(65 ksi) = 61.75 ksi

OK

MAXIMUM NEGATIVE MOMENT STEEL STRESS UNDER FACTORED LOADS:

fs(-) = 53.4 ksi
fs(-) < φFy = 0.95(65 ksi) = 61.75 ksi

OK

MAXIMUM SHEAR STRESS UNDER FACTORED LOADS:

v = 113.6 psi
v < φVc = 0.9(0.0948)√f'c
v < φVc = 190.8 psi

OK

C:\cande\468920\Controlling Cases\case2.PRT
11/12/2015 - 13:59

Beam Definition - Steel Areas (in^2/ft)

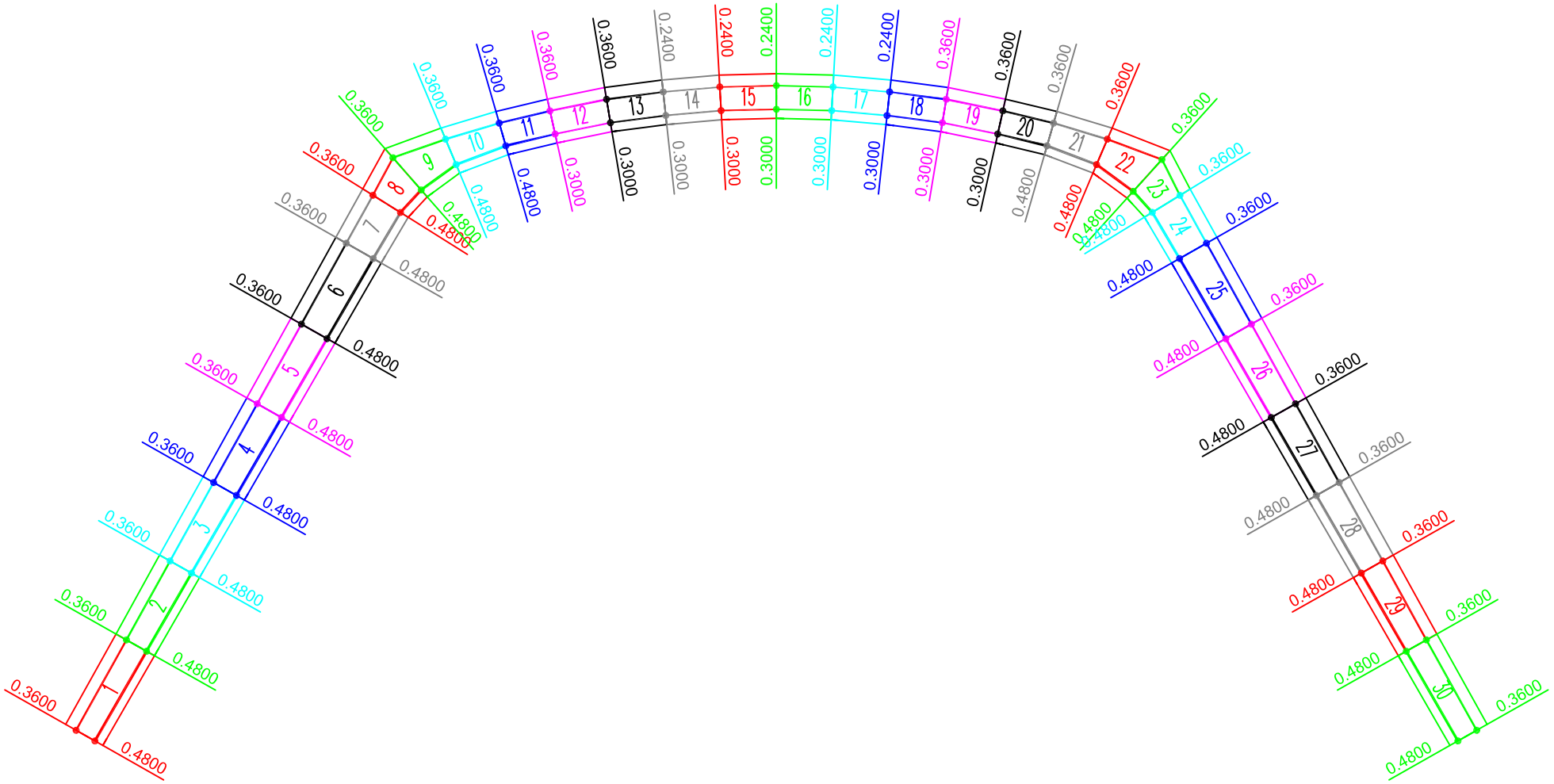

O-100 SERIES (20'S, 9.30'R, 2'C, HL-93 Tandem)

CONSPAN. O-SERIES

C:\cande\468920\Controlling Cases\case2.PRT
11/12/2015 - 13:59

Construction increments

Increment #7

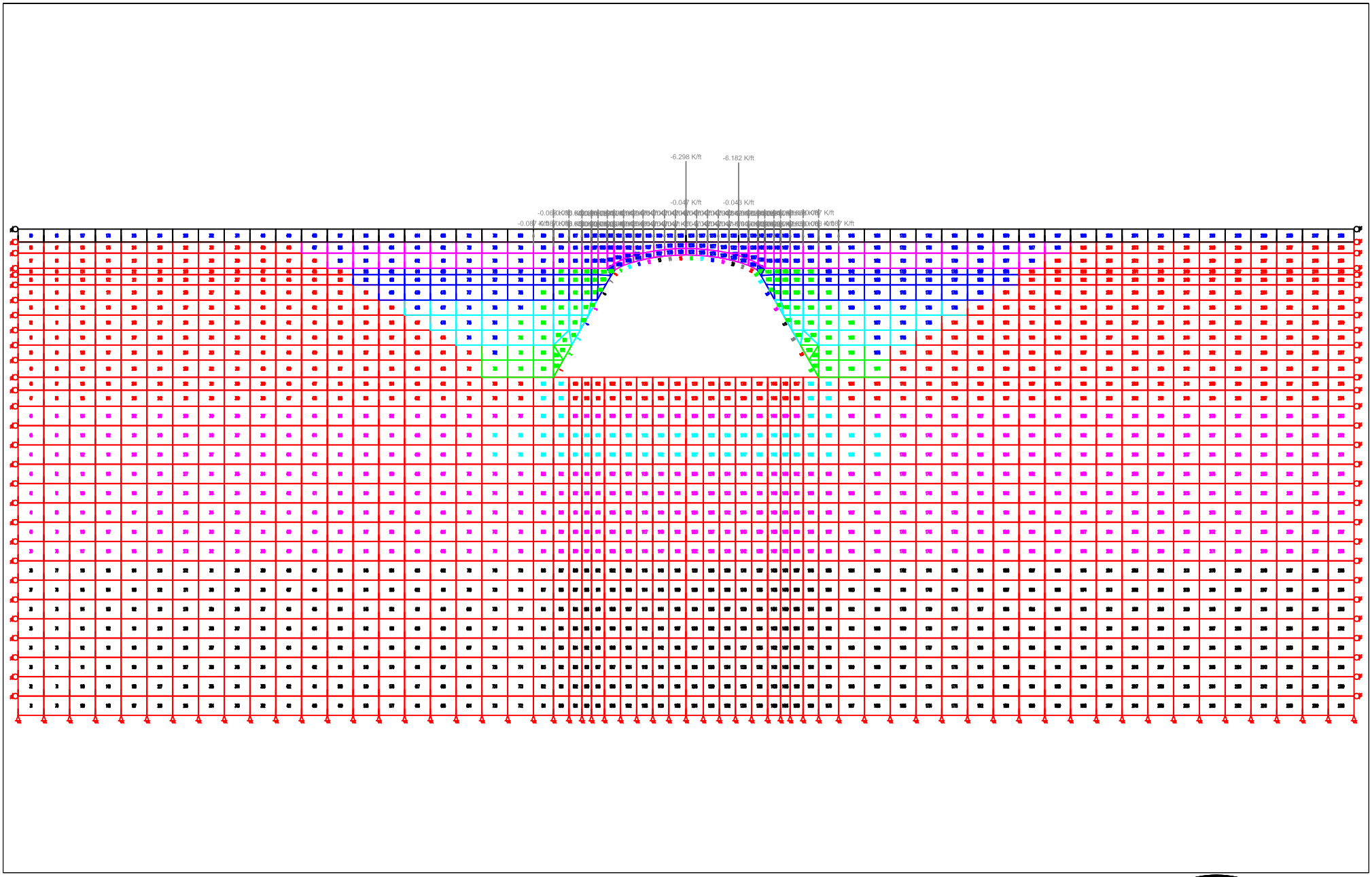

O-100 SERIES (20'S, 9.30'R, 2'C, HL-93 Tandem)

CON SPAN. O-SERIES

C:\cande\468920\Controlling Cases\case2.PRT
11/12/2015 - 13:59

Construction increments

Increment #7

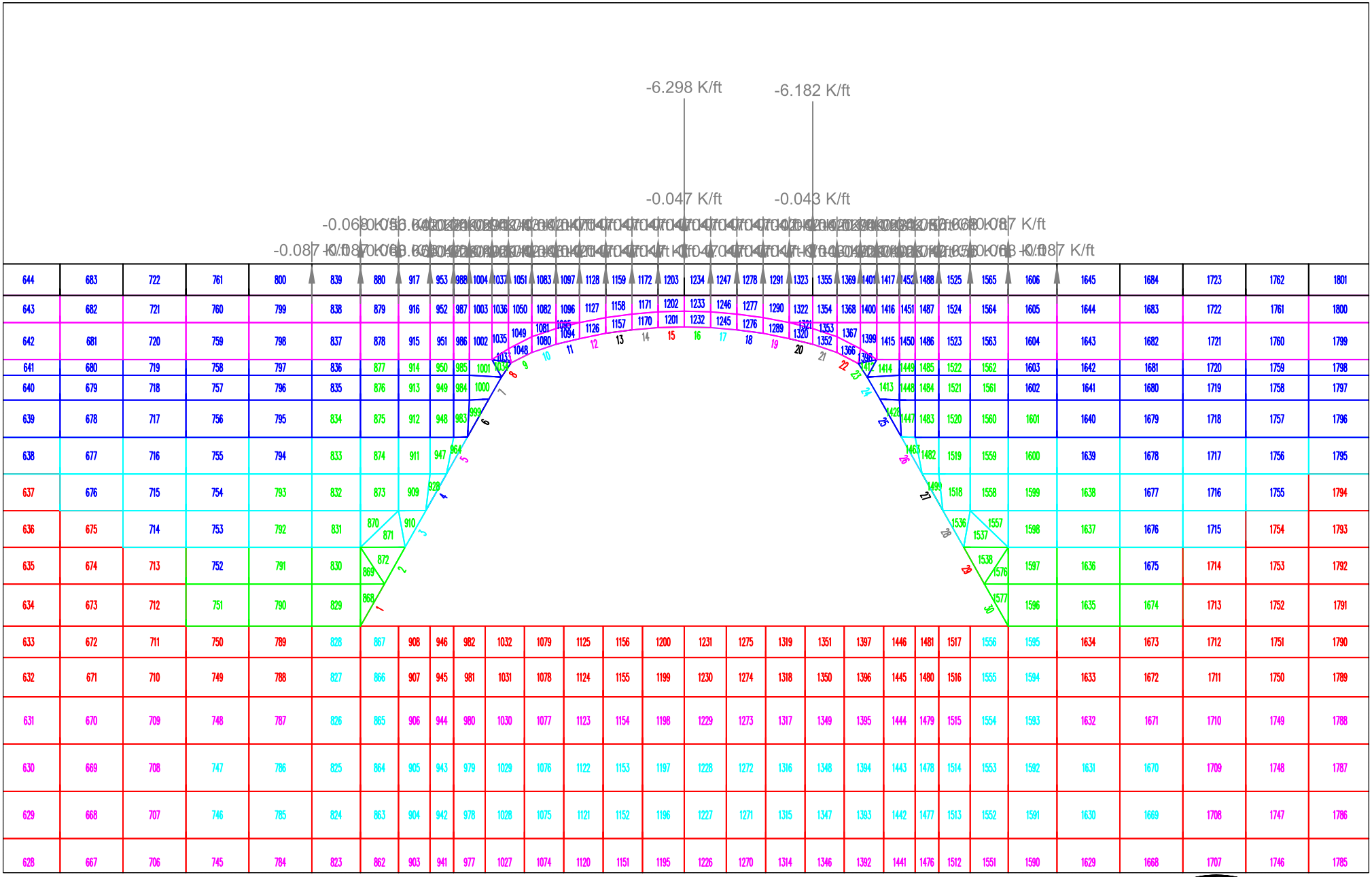

O-100 SERIES (20'S, 9.30'R, 2'C, HL-93 Tandem)

C:\cande\468920\Controlling Cases\case2.PRT
11/12/2015 - 13:59

Node Numbers

Increment #7

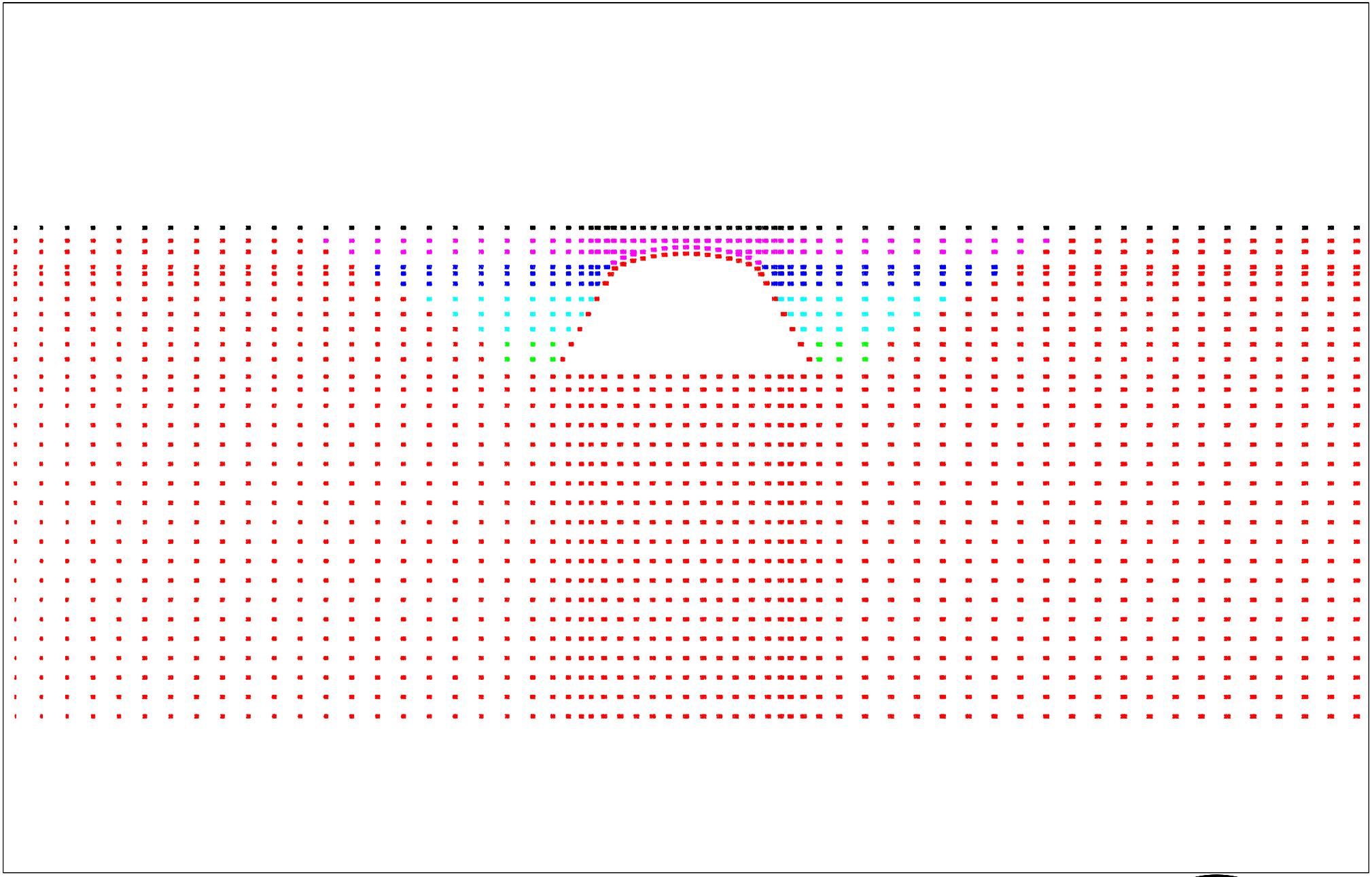

O-100 SERIES (20'S, 9.30'R, 2'C, HL-93 Tandem)

C:\cande\468920\Controlling Cases\case2.PRT
11/12/2015 - 13:59

Node Numbers

Increment #7

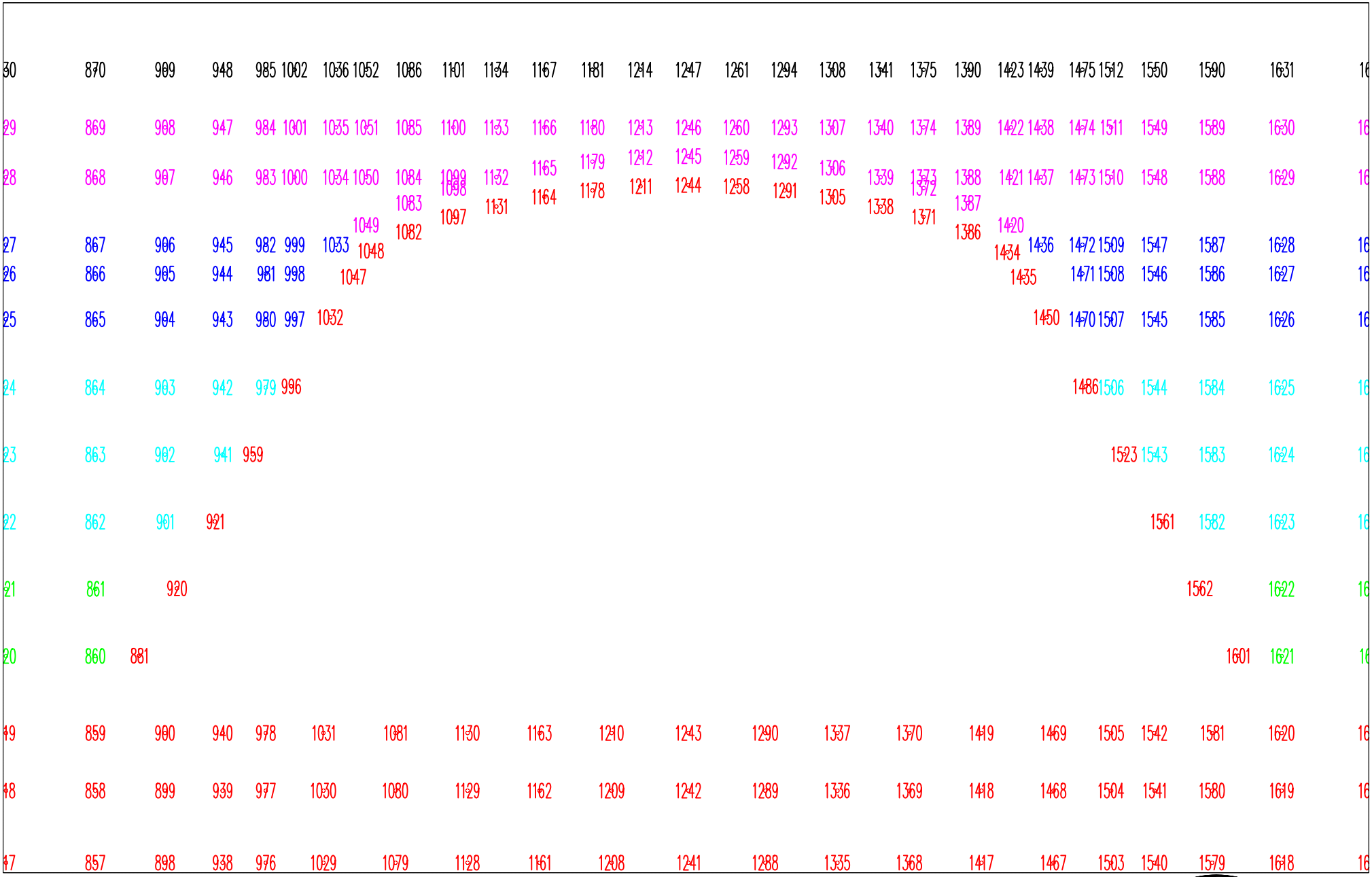

O-100 SERIES (20'S, 9.30'R, 2'C, HL-93 Tandem)

CON SPAN. O-SERIES

C:\cande\468920\Controlling Cases\case1.PRT
11/12/2015 - 13:57

Moments M (ft*K/ft)

Increment #12

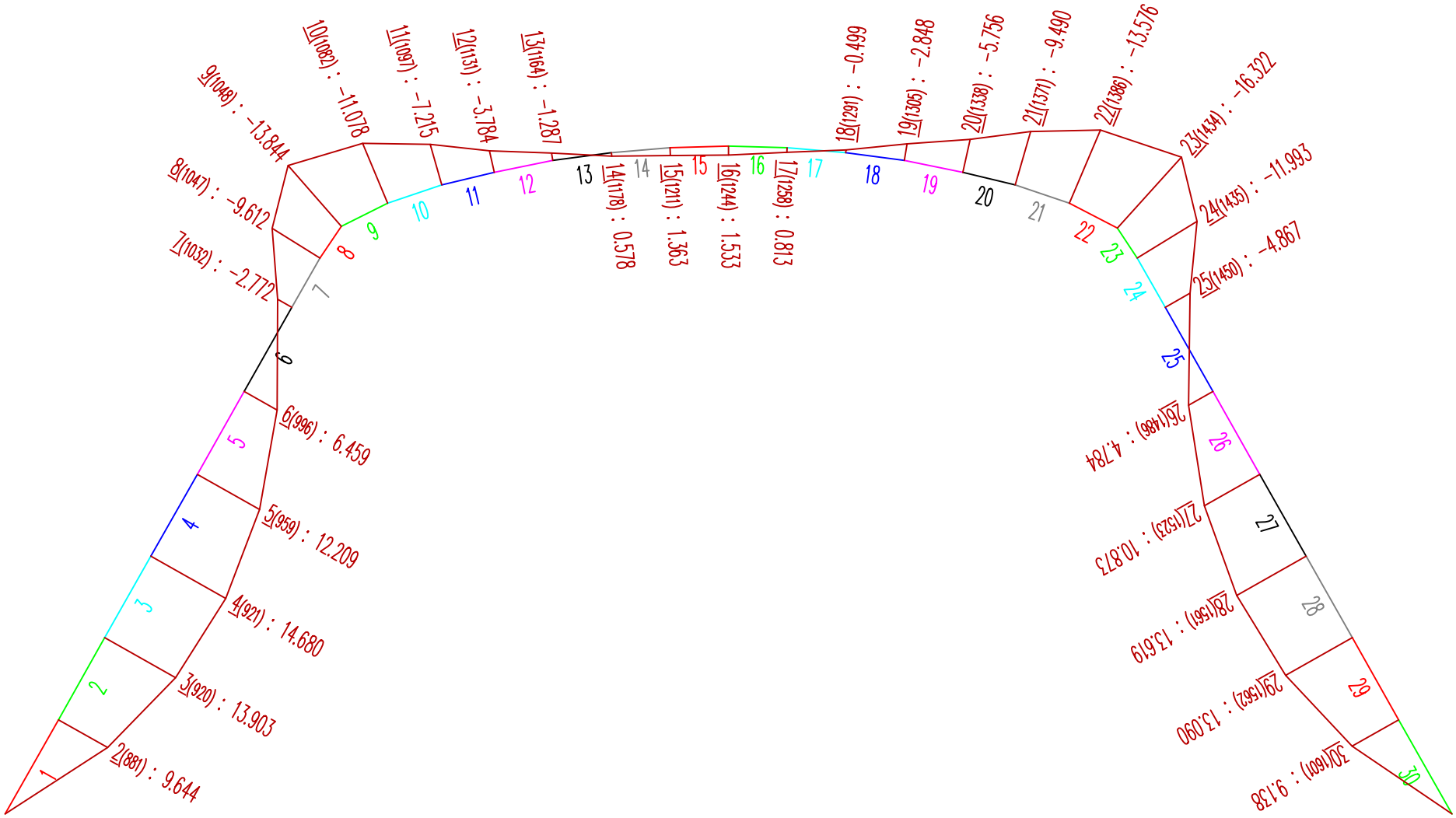

Controlling Case: Maximum Positive Moment

O-100 SERIES (20'S, 9.30'R, 13'C, HL-93 Tandem)

CONSPAN. O-SERIES

C:\cande\468920\Controlling Cases\case2.PRT
11/12/2015 - 13:59

Moments M (ft*K/ft)

Increment #7

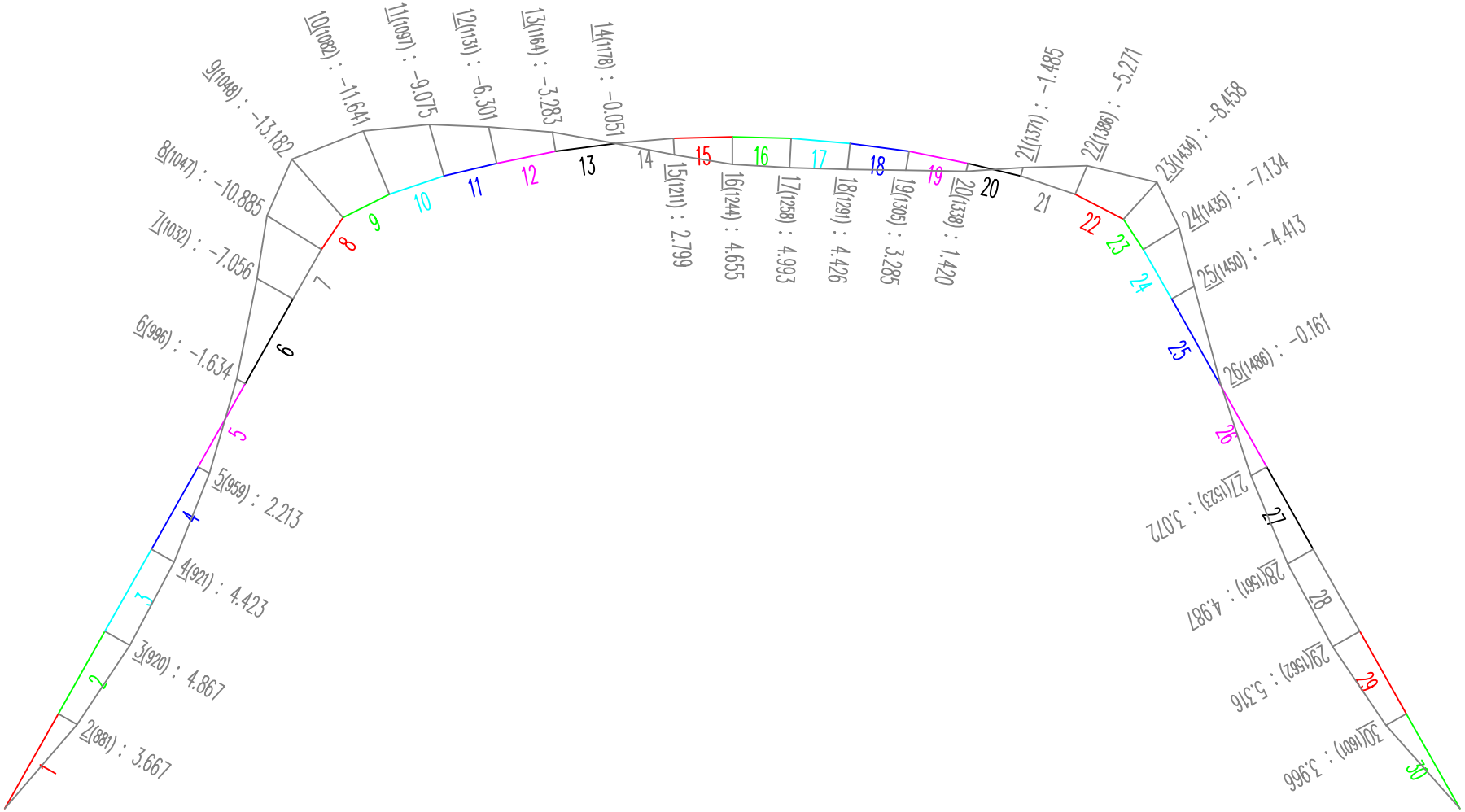

Controlling Case: Maximum Negative Moment

O-100 SERIES (20'S, 9.30'R, 2'C, HL-93 Tandem)

C:\cande\468920\Controlling Cases\case1.PRT
11/12/2015 - 13:57

Shear V (K/ft)

Increment #12

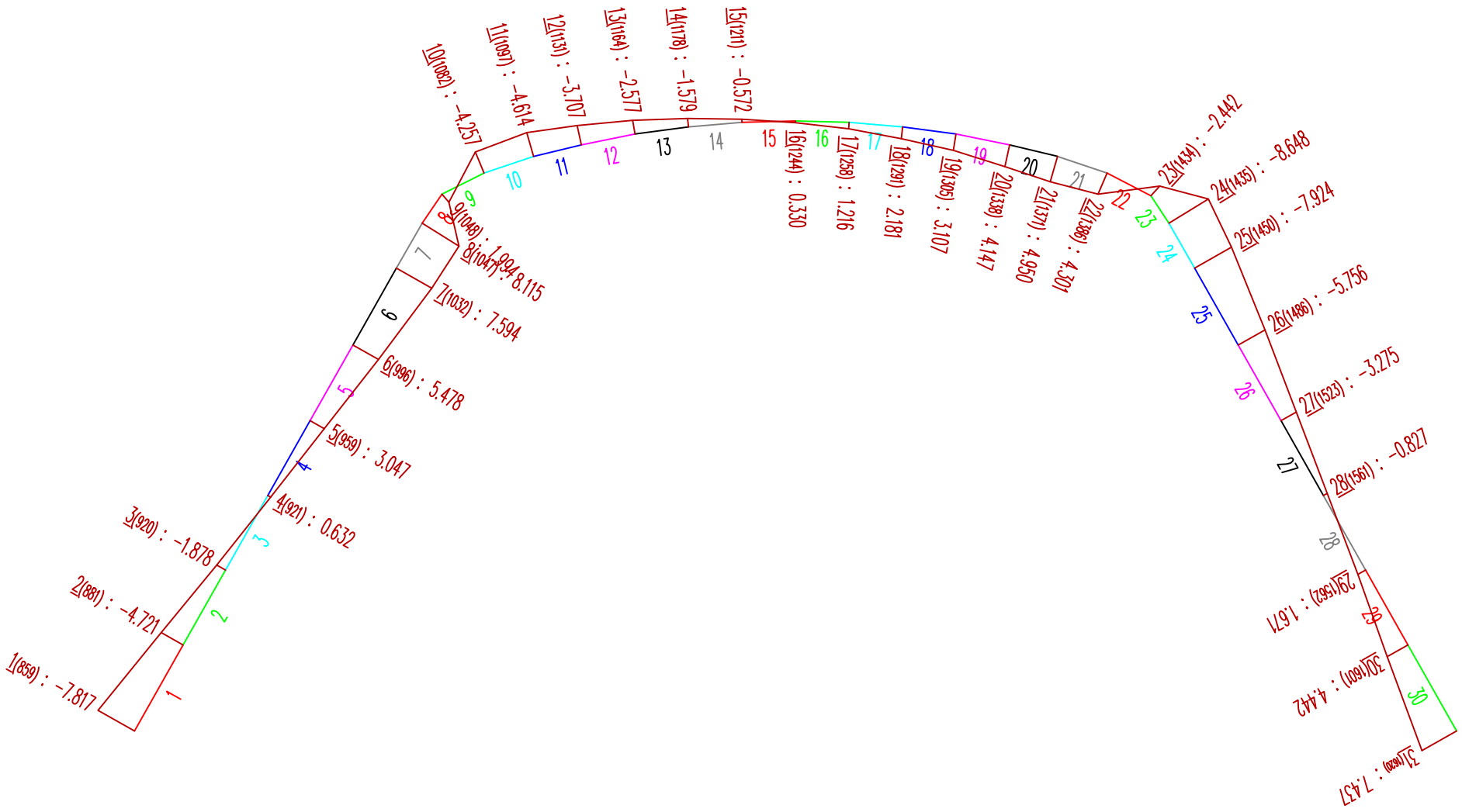

Controlling Case: Maximum Shear

O-100 SERIES (20'S, 9.30'R, 13'C, HL-93 Tandem)

CONSPAN. O-SERIES

APPENDIX A

CON/SPAN Project #468920-010

US ROUTE 2 BRIDGE NO. 126

CANDE ANALYSIS RESULTS

TABLE OF CONTENTS

PART A: CONTROLLING CASE FOR MAXIMUM POSITIVE MOMENT AND SHEAR 4
A1 INPUT DATUM 4
A1.1 BRIDGE PROPERTIES 5
A1.2 Steel Areas and Beam Thickness 5
A1.3 ELEMENT DEFINITION 6
A1.4 NODAL COORDINATES 24
A1.5 BOUNDARY CONDITIONS INCLUDING APPLIED LOADING 33
A1.6 BEAM ELEMENTS CONNECTIVITY MATRIX 35
A1.7 MATERIAL CHARACTERIZATION FOR SOILS 36
A2 LOAD INCREMENT 1: Dead Load of Structure 37
A2.1 STRUCTURAL RESPONSE OF BRIDGE 37
A2.2 STRESSES IN BRIDGE WALL 38
A3 LOAD INCREMENT 2: Backfill to 1/3 of Leg 39
A3.1 STRUCTURAL RESPONSE OF BRIDGE 39
A3.2 STRESSES IN BRIDGE WALL 40
A4 LOAD INCREMENT 3: Backfill to 2/3 of Leg 41
A4.1 STRUCTURAL RESPONSE OF BRIDGE 41
A4.2 STRESSES IN BRIDGE WALL 42
A5 LOAD INCREMENT 4: Backfill to Haunch 43
A5.1 STRUCTURAL RESPONSE OF BRIDGE 43
A5.2 STRESSES IN BRIDGE WALL 44
A6 LOAD INCREMENT 5: Backfill to 1'-0" Cover 45
A6.1 STRUCTURAL RESPONSE OF BRIDGE 45
A6.2 STRESSES IN BRIDGE WALL 46
A7 LOAD INCREMENT 6: Backfill to 2'-0" Cover 47
A7.1 STRUCTURAL RESPONSE OF BRIDGE 47
A7.2 STRESSES IN BRIDGE WALL 48
A8 LOAD INCREMENT 7: Backfill to 4'-0" Cover 49
A8.1 STRUCTURAL RESPONSE OF BRIDGE 49
A8.2 STRESSES IN BRIDGE WALL 50
A9 LOAD INCREMENT 8: Backfill to 6'-0" Cover 51
A9.1 STRUCTURAL RESPONSE OF BRIDGE 51
A9.2 STRESSES IN BRIDGE WALL 52
A10 LOAD INCREMENT 9: Backfill to 8'-0" Cover 53
A10.1 STRUCTURAL RESPONSE OF BRIDGE 53
A10.2 STRESSES IN BRIDGE WALL 54
A11 LOAD INCREMENT 10: Backfill to 10'-0" Cover 55
A11.1 STRUCTURAL RESPONSE OF BRIDGE 55
A11.2 STRESSES IN BRIDGE WALL 56
A12 LOAD INCREMENT 11: BACKFILL TO 13’-0” COVER 57
A12.1 STRUCTURAL RESPONSE OF BRIDGE 57
A12.2 STRESSES IN BRIDGE WALL 58
A13 LOAD INCREMENT 12: APPLY LIVE LOAD 59
A13.1 STRUCTURAL RESPONSE OF BRIDGE 59
A13.2 STRESSES IN BRIDGE WALL 60
PART B: CONTROLLING CASE FOR MAXIMUM NEGATIVE MOMENT 61
B1 INPUT DATUM 61
B1.1 BOUNDARY CONDITIONS INCLUDING APPLIED LOADING 62

B2 RESULTS FOR LOAD INCREMENT 1 TO 6 64
B3 LOAD INCREMENT 7: Apply Live Load 65
B3.1 STRUCTURAL RESPONSE OF BRIDGE 65
B3.2 STRESSES IN BRIDGE WALL 66

PART A: CONTROLLING CASE FOR MAXIMUM POSITIVE MOMENT AND SHEAR

The following is a formated version of the CANDE output file case1.PRT

A1 INPUT DATUM

```
                CCCC   AA     N    N  SSSSS  PPPPP  AA     N    N         0000    11
               CC     AAA    NN   N  SS     PP  P  AAA    NN   N        00  00   11
              CC     AA A   NNN  N  SSSSS  PPPPP  AA A   NNN  N  DDDD  00  00   11
             CC     AAAAA  NN N N      S  PP     AAAAA  NN N N        00  00   11
             CCCC  AA   A NN  NN  SSSSS  PP     AA   A NN  NN         0000    11

           IIIIIIIIIIIIIIIIIIIIIIIIIIIIIIIIIIIIIIIIIIIIIIIIIIIIIIIIIIIIIIIIIIIIIII
              IIIIIIIIIIIIIIIIIIIIIIIIIIIIIIIIIIIIIIIIIIIIIIIIIIIIIIIIIIIIIII
                                                                        III
                  (C)ULVERT (AN)ALYSIS FOR CON/(SPAN) BRIDGE SYSTEMS     II
                                                                        I

                                     FINAL RELEASE
                                   MAY  2001


 modified by LOCKWOOD, JONES & BEALS
    DATED 01/01/92

 concrete rib and disconnected structure capability added by KATONA and MUSSER
    DATED 09/15/95

rigid link capability added by Katona
  Dated May 2001
```

```
O-100 SERIES (20'S, 9.30'R, 13'C, HL-93 Tandem)

 EXECUTION MODE .....ANAL
 SOLUTION LEVEL .....F.E.USER
 CULVERT TYPE ...... CONCRETE
```

A1.1 BRIDGE PROPERTIES

```
PIPE PROPERTIES ARE AS FOLLOWS ...

     NOMINAL PIPE DIAMETER .............        -1.0000
     CONCRETE COMPRESSIVE STRENGTH .....         5000.0 psi
     CONCRETE ELASTIC MODULUS ..........     4030508.75 psi
     CONCRETE POISSON RATIO ............          .1700
     DENSITY OF PIPE      .............          150.0 PCF
     STEEL YIELD STRENGTH ..............        65000.0 psi
     STEEL ELASTIC MODULUS .............     29000000.0 psi
     STEEL POISSON RATIO ...............          .3000
     NONLINEAR CODE (1,2,OR 3) .........              3
     CONC. CRACKING STRAIN (1,2,3) .....        .000130
     CONC. YIELDING STRAIN (2,3) .......        .000602
     CONC. CRUSHING STRAIN (2,3) .......        .002000
     STEEL YIELDING STRAIN (3) .........        .002040
     SPACING LONGITUDINAL REINFORCEMENT             2.0 in
```

A1.2 STEEL AREAS AND BEAM THICKNESS

```
ASI and ASO = Inside and Outside face steel area at beam node N (in^2/ft)
TBI and TBO = Inside and Outside face steel cover at beam node N (in)
        PTV = Beam Thickness at beam node N (in)
```

N	ASI	ASO	TBI	TBO	PTV
1	0.48	0.36	1.63	2.14	7.62
2	0.48	0.36	1.63	2.14	7.89
3	0.48	0.36	1.63	2.14	8.17
4	0.48	0.36	1.63	2.14	8.45
5	0.48	0.36	1.63	2.14	8.74
6	0.48	0.36	1.63	2.14	9.02
7	0.48	0.36	1.63	2.14	9.3
8	0.48	0.36	1.63	2.14	9.56
9	0.48	0.36	1.63	2.14	11.42
10	0.48	0.36	1.63	2.14	8.69
11	0.48	0.36	1.63	2.14	8.0
12	0.3	0.36	1.63	2.14	8.0
13	0.3	0.36	1.63	2.14	8.0
14	0.3	0.24	1.63	2.14	8.0
15	0.3	0.24	1.63	2.14	8.0
16	0.3	0.24	1.63	2.14	8.0
17	0.3	0.24	1.63	2.14	8.0
18	0.3	0.24	1.63	2.14	8.0
19	0.3	0.36	1.63	2.14	8.0
20	0.3	0.36	1.63	2.14	8.0
21	0.48	0.36	1.63	2.14	8.0
22	0.48	0.36	1.63	2.14	8.69
23	0.48	0.36	1.63	2.14	11.42
24	0.48	0.36	1.63	2.14	9.56
25	0.48	0.36	1.63	2.14	9.3
26	0.48	0.36	1.63	2.14	9.02
27	0.48	0.36	1.63	2.14	8.74
28	0.48	0.36	1.63	2.14	8.45
29	0.48	0.36	1.63	2.14	8.17
30	0.48	0.36	1.63	2.14	7.89
31	0.48	0.36	1.63	2.14	7.62

```
* * BEGIN PREP OF FINITE ELEMENT INPUT * *
THE DATA TO BE RUN IS ENTITLED
CON/SPAN ARCH CULVERT 20'-0" SPAN
NUMBER OF CONSTRUCTION INCREMENTS------   15
PRINT CONTROL FOR PREP OUTPUT----------    4
INPUT DATA CHECK-----------------------    0
PLOT TAPE GENERATION-------------------    1
ENTIRE FINITE ELEMENT RESULTS OUTPUT---    0
THE NUMBER OF NODES IS----------------- 2481
THE NUMBER OF ELEMENTS IS-------------- 2396
THE NUMBER OF BOUNDARY CONDITIONS IS---  199
M, S, T AT ELEM. END CONTROL IS--------    0
```

A1.3 ELEMENT DEFINITION

```
I,J,K,L = Nodal connectivity for element E
      M = Material number
   Incr = Construction increment where the element appears
      T = Element type (Beam, Quadratic or Triangle)
     BW = Band width of the element
```

E	I	J	K	L	M	Incr	T	BW
1	881	859	0	0	1	1	BEAM	69
2	920	881	0	0	2	1	BEAM	120
3	921	920	0	0	3	1	BEAM	6
4	959	921	0	0	4	1	BEAM	117
5	996	959	0	0	5	1	BEAM	114
6	1032	996	0	0	6	1	BEAM	111
7	1047	1032	0	0	7	1	BEAM	48
8	1048	1047	0	0	8	1	BEAM	6
9	1082	1048	0	0	9	1	BEAM	105
10	1097	1082	0	0	10	1	BEAM	48
11	1131	1097	0	0	11	1	BEAM	105
12	1164	1131	0	0	12	1	BEAM	102
13	1178	1164	0	0	13	1	BEAM	45
14	1211	1178	0	0	14	1	BEAM	102
15	1244	1211	0	0	15	1	BEAM	102
16	1258	1244	0	0	16	1	BEAM	45
17	1291	1258	0	0	17	1	BEAM	102
18	1305	1291	0	0	18	1	BEAM	45
19	1338	1305	0	0	19	1	BEAM	102
20	1371	1338	0	0	20	1	BEAM	102
21	1386	1371	0	0	21	1	BEAM	48
22	1434	1386	0	0	22	1	BEAM	147
23	1435	1434	0	0	23	1	BEAM	6
24	1450	1435	0	0	24	1	BEAM	48
25	1486	1450	0	0	25	1	BEAM	111
26	1523	1486	0	0	26	1	BEAM	114
27	1561	1523	0	0	27	1	BEAM	117
28	1562	1561	0	0	28	1	BEAM	6
29	1601	1562	0	0	29	1	BEAM	120
30	1620	1601	0	0	30	1	BEAM	60
31	1	41	42	2	6	1	QUAD	84
32	2	42	43	3	6	1	QUAD	84
33	3	43	44	4	6	1	QUAD	84
34	4	44	45	5	6	1	QUAD	84
35	5	45	46	6	6	1	QUAD	84
36	6	46	47	7	6	1	QUAD	84
37	7	47	48	8	6	1	QUAD	84
38	8	48	49	9	6	1	QUAD	84
39	9	49	50	10	5	1	QUAD	84
40	10	50	51	11	5	1	QUAD	84
41	11	51	52	12	5	1	QUAD	84
42	12	52	53	13	5	1	QUAD	84
43	13	53	54	14	5	1	QUAD	84
44	14	54	55	15	5	1	QUAD	84
45	15	55	56	16	5	1	QUAD	84
46	16	56	57	17	5	1	QUAD	84
47	17	57	58	18	1	1	QUAD	84

E	I	J	K	L	M	Incr	T	BW
48	18	58	59	19	1	1	QUAD	84
49	19	59	60	20	1	1	QUAD	84
50	20	60	61	21	1	1	QUAD	84
51	21	61	62	22	1	1	QUAD	84
52	22	62	63	23	1	1	QUAD	84
53	23	63	64	24	1	1	QUAD	84
54	24	64	65	25	1	1	QUAD	84
55	25	65	66	26	1	1	QUAD	84
56	26	66	67	27	1	1	QUAD	84
57	27	67	68	28	1	1	QUAD	84
58	28	68	69	29	1	1	QUAD	84
59	29	69	70	30	4	6	QUAD	84
60	30	70	71	31	4	7	QUAD	84
61	31	71	72	32	4	7	QUAD	84
62	32	72	73	33	4	8	QUAD	84
63	33	73	74	34	4	8	QUAD	84
64	34	74	75	35	4	9	QUAD	84
65	35	75	76	36	4	9	QUAD	84
66	36	76	77	37	4	10	QUAD	84
67	37	77	78	38	4	10	QUAD	84
68	38	78	79	39	4	11	QUAD	84
69	39	79	80	40	4	11	QUAD	84
70	41	81	82	42	6	1	QUAD	84
71	42	82	83	43	6	1	QUAD	84
72	43	83	84	44	6	1	QUAD	84
73	44	84	85	45	6	1	QUAD	84
74	45	85	86	46	6	1	QUAD	84
75	46	86	87	47	6	1	QUAD	84
76	47	87	88	48	6	1	QUAD	84
77	48	88	89	49	6	1	QUAD	84
78	49	89	90	50	5	1	QUAD	84
79	50	90	91	51	5	1	QUAD	84
80	51	91	92	52	5	1	QUAD	84
81	52	92	93	53	5	1	QUAD	84
82	53	93	94	54	5	1	QUAD	84
83	54	94	95	55	5	1	QUAD	84
84	55	95	96	56	5	1	QUAD	84
85	56	96	97	57	5	1	QUAD	84
86	57	97	98	58	1	1	QUAD	84
87	58	98	99	59	1	1	QUAD	84
88	59	99	100	60	1	1	QUAD	84
89	60	100	101	61	1	1	QUAD	84
90	61	101	102	62	1	1	QUAD	84
91	62	102	103	63	1	1	QUAD	84
92	63	103	104	64	1	1	QUAD	84
93	64	104	105	65	1	1	QUAD	84
94	65	105	106	66	1	1	QUAD	84

E	I	J	K	L	M	Incr	T	BW
95	66	106	107	67	1	1	QUAD	84
96	67	107	108	68	1	1	QUAD	84
97	68	108	109	69	1	1	QUAD	84
98	69	109	110	70	4	6	QUAD	84
99	70	110	111	71	4	7	QUAD	84
100	71	111	112	72	4	7	QUAD	84
101	72	112	113	73	4	8	QUAD	84
102	73	113	114	74	4	8	QUAD	84
103	74	114	115	75	4	9	QUAD	84
104	75	115	116	76	4	9	QUAD	84
105	76	116	117	77	4	10	QUAD	84
106	77	117	118	78	4	10	QUAD	84
107	78	118	119	79	4	11	QUAD	84
108	79	119	120	80	4	11	QUAD	84
109	81	121	122	82	6	1	QUAD	84
110	82	122	123	83	6	1	QUAD	84
111	83	123	124	84	6	1	QUAD	84
112	84	124	125	85	6	1	QUAD	84
113	85	125	126	86	6	1	QUAD	84
114	86	126	127	87	6	1	QUAD	84
115	87	127	128	88	6	1	QUAD	84
116	88	128	129	89	6	1	QUAD	84
117	89	129	130	90	5	1	QUAD	84
118	90	130	131	91	5	1	QUAD	84
119	91	131	132	92	5	1	QUAD	84
120	92	132	133	93	5	1	QUAD	84
121	93	133	134	94	5	1	QUAD	84
122	94	134	135	95	5	1	QUAD	84
123	95	135	136	96	5	1	QUAD	84
124	96	136	137	97	5	1	QUAD	84
125	97	137	138	98	1	1	QUAD	84
126	98	138	139	99	1	1	QUAD	84
127	99	139	140	100	1	1	QUAD	84
128	100	140	141	101	1	1	QUAD	84
129	101	141	142	102	1	1	QUAD	84
130	102	142	143	103	1	1	QUAD	84
131	103	143	144	104	1	1	QUAD	84
132	104	144	145	105	1	1	QUAD	84
133	105	145	146	106	1	1	QUAD	84
134	106	146	147	107	1	1	QUAD	84
135	107	147	148	108	1	1	QUAD	84
136	108	148	149	109	1	1	QUAD	84
137	109	149	150	110	4	6	QUAD	84
138	110	150	151	111	4	7	QUAD	84
139	111	151	152	112	4	7	QUAD	84
140	112	152	153	113	4	8	QUAD	84
141	113	153	154	114	4	8	QUAD	84
142	114	154	155	115	4	9	QUAD	84
143	115	155	156	116	4	9	QUAD	84
144	116	156	157	117	4	10	QUAD	84
145	117	157	158	118	4	10	QUAD	84
146	118	158	159	119	4	11	QUAD	84
147	119	159	160	120	4	11	QUAD	84
148	121	161	162	122	6	1	QUAD	84
149	122	162	163	123	6	1	QUAD	84
150	123	163	164	124	6	1	QUAD	84
151	124	164	165	125	6	1	QUAD	84
152	125	165	166	126	6	1	QUAD	84
153	126	166	167	127	6	1	QUAD	84
154	127	167	168	128	6	1	QUAD	84
155	128	168	169	129	6	1	QUAD	84
156	129	169	170	130	5	1	QUAD	84
157	130	170	171	131	5	1	QUAD	84
158	131	171	172	132	5	1	QUAD	84
159	132	172	173	133	5	1	QUAD	84
160	133	173	174	134	5	1	QUAD	84
161	134	174	175	135	5	1	QUAD	84
162	135	175	176	136	5	1	QUAD	84
163	136	176	177	137	5	1	QUAD	84
164	137	177	178	138	1	1	QUAD	84
165	138	178	179	139	1	1	QUAD	84

E	I	J	K	L	M	Incr	T	BW
166	139	179	180	140	1	1	QUAD	84
167	140	180	181	141	1	1	QUAD	84
168	141	181	182	142	1	1	QUAD	84
169	142	182	183	143	1	1	QUAD	84
170	143	183	184	144	1	1	QUAD	84
171	144	184	185	145	1	1	QUAD	84
172	145	185	186	146	1	1	QUAD	84
173	146	186	187	147	1	1	QUAD	84
174	147	187	188	148	1	1	QUAD	84
175	148	188	189	149	1	1	QUAD	84
176	149	189	190	150	4	6	QUAD	84
177	150	190	191	151	4	7	QUAD	84
178	151	191	192	152	4	7	QUAD	84
179	152	192	193	153	4	8	QUAD	84
180	153	193	194	154	4	8	QUAD	84
181	154	194	195	155	4	9	QUAD	84
182	155	195	196	156	4	9	QUAD	84
183	156	196	197	157	4	10	QUAD	84
184	157	197	198	158	4	10	QUAD	84
185	158	198	199	159	4	11	QUAD	84
186	159	199	200	160	4	11	QUAD	84
187	161	201	202	162	6	1	QUAD	84
188	162	202	203	163	6	1	QUAD	84
189	163	203	204	164	6	1	QUAD	84
190	164	204	205	165	6	1	QUAD	84
191	165	205	206	166	6	1	QUAD	84
192	166	206	207	167	6	1	QUAD	84
193	167	207	208	168	6	1	QUAD	84
194	168	208	209	169	6	1	QUAD	84
195	169	209	210	170	5	1	QUAD	84
196	170	210	211	171	5	1	QUAD	84
197	171	211	212	172	5	1	QUAD	84
198	172	212	213	173	5	1	QUAD	84
199	173	213	214	174	5	1	QUAD	84
200	174	214	215	175	5	1	QUAD	84
201	175	215	216	176	5	1	QUAD	84
202	176	216	217	177	5	1	QUAD	84
203	177	217	218	178	1	1	QUAD	84
204	178	218	219	179	1	1	QUAD	84
205	179	219	220	180	1	1	QUAD	84
206	180	220	221	181	1	1	QUAD	84
207	181	221	222	182	1	1	QUAD	84
208	182	222	223	183	1	1	QUAD	84
209	183	223	224	184	1	1	QUAD	84
210	184	224	225	185	1	1	QUAD	84
211	185	225	226	186	1	1	QUAD	84
212	186	226	227	187	1	1	QUAD	84
213	187	227	228	188	1	1	QUAD	84
214	188	228	229	189	1	1	QUAD	84
215	189	229	230	190	4	6	QUAD	84
216	190	230	231	191	4	7	QUAD	84
217	191	231	232	192	4	7	QUAD	84
218	192	232	233	193	4	8	QUAD	84
219	193	233	234	194	4	8	QUAD	84
220	194	234	235	195	4	9	QUAD	84
221	195	235	236	196	4	9	QUAD	84
222	196	236	237	197	4	10	QUAD	84
223	197	237	238	198	4	10	QUAD	84
224	198	238	239	199	4	11	QUAD	84
225	199	239	240	200	4	11	QUAD	84
226	201	241	242	202	6	1	QUAD	84
227	202	242	243	203	6	1	QUAD	84
228	203	243	244	204	6	1	QUAD	84
229	204	244	245	205	6	1	QUAD	84
230	205	245	246	206	6	1	QUAD	84
231	206	246	247	207	6	1	QUAD	84
232	207	247	248	208	6	1	QUAD	84
233	208	248	249	209	6	1	QUAD	84
234	209	249	250	210	5	1	QUAD	84
235	210	250	251	211	5	1	QUAD	84
236	211	251	252	212	5	1	QUAD	84

E	I	J	K	L	M	Incr	T	BW
237	212	252	253	213	5	1	QUAD	84
238	213	253	254	214	5	1	QUAD	84
239	214	254	255	215	5	1	QUAD	84
240	215	255	256	216	5	1	QUAD	84
241	216	256	257	217	5	1	QUAD	84
242	217	257	258	218	1	1	QUAD	84
243	218	258	259	219	1	1	QUAD	84
244	219	259	260	220	1	1	QUAD	84
245	220	260	261	221	1	1	QUAD	84
246	221	261	262	222	1	1	QUAD	84
247	222	262	263	223	1	1	QUAD	84
248	223	263	264	224	1	1	QUAD	84
249	224	264	265	225	1	1	QUAD	84
250	225	265	266	226	1	1	QUAD	84
251	226	266	267	227	1	1	QUAD	84
252	227	267	268	228	1	1	QUAD	84
253	228	268	269	229	1	1	QUAD	84
254	229	269	270	230	4	6	QUAD	84
255	230	270	271	231	4	7	QUAD	84
256	231	271	272	232	4	7	QUAD	84
257	232	272	273	233	4	8	QUAD	84
258	233	273	274	234	4	8	QUAD	84
259	234	274	275	235	4	9	QUAD	84
260	235	275	276	236	4	9	QUAD	84
261	236	276	277	237	4	10	QUAD	84
262	237	277	278	238	4	10	QUAD	84
263	238	278	279	239	4	11	QUAD	84
264	239	279	280	240	4	11	QUAD	84
265	241	281	282	242	6	1	QUAD	84
266	242	282	283	243	6	1	QUAD	84
267	243	283	284	244	6	1	QUAD	84
268	244	284	285	245	6	1	QUAD	84
269	245	285	286	246	6	1	QUAD	84
270	246	286	287	247	6	1	QUAD	84
271	247	287	288	248	6	1	QUAD	84
272	248	288	289	249	6	1	QUAD	84
273	249	289	290	250	5	1	QUAD	84
274	250	290	291	251	5	1	QUAD	84
275	251	291	292	252	5	1	QUAD	84
276	252	292	293	253	5	1	QUAD	84
277	253	293	294	254	5	1	QUAD	84
278	254	294	295	255	5	1	QUAD	84
279	255	295	296	256	5	1	QUAD	84
280	256	296	297	257	5	1	QUAD	84
281	257	297	298	258	1	1	QUAD	84
282	258	298	299	259	1	1	QUAD	84
283	259	299	300	260	1	1	QUAD	84
284	260	300	301	261	1	1	QUAD	84
285	261	301	302	262	1	1	QUAD	84
286	262	302	303	263	1	1	QUAD	84
287	263	303	304	264	1	1	QUAD	84
288	264	304	305	265	1	1	QUAD	84
289	265	305	306	266	1	1	QUAD	84
290	266	306	307	267	1	1	QUAD	84
291	267	307	308	268	1	1	QUAD	84
292	268	308	309	269	1	1	QUAD	84
293	269	309	310	270	4	6	QUAD	84
294	270	310	311	271	4	7	QUAD	84
295	271	311	312	272	4	7	QUAD	84
296	272	312	313	273	4	8	QUAD	84
297	273	313	314	274	4	8	QUAD	84
298	274	314	315	275	4	9	QUAD	84
299	275	315	316	276	4	9	QUAD	84
300	276	316	317	277	4	10	QUAD	84
301	277	317	318	278	4	10	QUAD	84
302	278	318	319	279	4	11	QUAD	84
303	279	319	320	280	4	11	QUAD	84
304	281	321	322	282	6	1	QUAD	84
305	282	322	323	283	6	1	QUAD	84
306	283	323	324	284	6	1	QUAD	84
307	284	324	325	285	6	1	QUAD	84

E	I	J	K	L	M	Incr	T	BW
308	285	325	326	286	6	1	QUAD	84
309	286	326	327	287	6	1	QUAD	84
310	287	327	328	288	6	1	QUAD	84
311	288	328	329	289	6	1	QUAD	84
312	289	329	330	290	5	1	QUAD	84
313	290	330	331	291	5	1	QUAD	84
314	291	331	332	292	5	1	QUAD	84
315	292	332	333	293	5	1	QUAD	84
316	293	333	334	294	5	1	QUAD	84
317	294	334	335	295	5	1	QUAD	84
318	295	335	336	296	5	1	QUAD	84
319	296	336	337	297	5	1	QUAD	84
320	297	337	338	298	1	1	QUAD	84
321	298	338	339	299	1	1	QUAD	84
322	299	339	340	300	1	1	QUAD	84
323	300	340	341	301	1	1	QUAD	84
324	301	341	342	302	1	1	QUAD	84
325	302	342	343	303	1	1	QUAD	84
326	303	343	344	304	1	1	QUAD	84
327	304	344	345	305	1	1	QUAD	84
328	305	345	346	306	1	1	QUAD	84
329	306	346	347	307	1	1	QUAD	84
330	307	347	348	308	1	1	QUAD	84
331	308	348	349	309	1	1	QUAD	84
332	309	349	350	310	4	6	QUAD	84
333	310	350	351	311	4	7	QUAD	84
334	311	351	352	312	4	7	QUAD	84
335	312	352	353	313	4	8	QUAD	84
336	313	353	354	314	4	8	QUAD	84
337	314	354	355	315	4	9	QUAD	84
338	315	355	356	316	4	9	QUAD	84
339	316	356	357	317	4	10	QUAD	84
340	317	357	358	318	4	10	QUAD	84
341	318	358	359	319	4	11	QUAD	84
342	319	359	360	320	4	11	QUAD	84
343	321	361	362	322	6	1	QUAD	84
344	322	362	363	323	6	1	QUAD	84
345	323	363	364	324	6	1	QUAD	84
346	324	364	365	325	6	1	QUAD	84
347	325	365	366	326	6	1	QUAD	84
348	326	366	367	327	6	1	QUAD	84
349	327	367	368	328	6	1	QUAD	84
350	328	368	369	329	6	1	QUAD	84
351	329	369	370	330	5	1	QUAD	84
352	330	370	371	331	5	1	QUAD	84
353	331	371	372	332	5	1	QUAD	84
354	332	372	373	333	5	1	QUAD	84
355	333	373	374	334	5	1	QUAD	84
356	334	374	375	335	5	1	QUAD	84
357	335	375	376	336	5	1	QUAD	84
358	336	376	377	337	5	1	QUAD	84
359	337	377	378	338	1	1	QUAD	84
360	338	378	379	339	1	1	QUAD	84
361	339	379	380	340	1	1	QUAD	84
362	340	380	381	341	1	1	QUAD	84
363	341	381	382	342	1	1	QUAD	84
364	342	382	383	343	1	1	QUAD	84
365	343	383	384	344	1	1	QUAD	84
366	344	384	385	345	1	1	QUAD	84
367	345	385	386	346	1	1	QUAD	84
368	346	386	387	347	1	1	QUAD	84
369	347	387	388	348	1	1	QUAD	84
370	348	388	389	349	1	1	QUAD	84
371	349	389	390	350	4	6	QUAD	84
372	350	390	391	351	4	7	QUAD	84
373	351	391	392	352	4	7	QUAD	84
374	352	392	393	353	4	8	QUAD	84
375	353	393	394	354	4	8	QUAD	84
376	354	394	395	355	4	9	QUAD	84
377	355	395	396	356	4	9	QUAD	84
378	356	396	397	357	4	10	QUAD	84

E	I	J	K	L	M	Incr	T	BW
379	357	397	398	358	4	10	QUAD	84
380	358	398	399	359	4	11	QUAD	84
381	359	399	400	360	4	11	QUAD	84
382	361	401	402	362	6	1	QUAD	84
383	362	402	403	363	6	1	QUAD	84
384	363	403	404	364	6	1	QUAD	84
385	364	404	405	365	6	1	QUAD	84
386	365	405	406	366	6	1	QUAD	84
387	366	406	407	367	6	1	QUAD	84
388	367	407	408	368	6	1	QUAD	84
389	368	408	409	369	6	1	QUAD	84
390	369	409	410	370	5	1	QUAD	84
391	370	410	411	371	5	1	QUAD	84
392	371	411	412	372	5	1	QUAD	84
393	372	412	413	373	5	1	QUAD	84
394	373	413	414	374	5	1	QUAD	84
395	374	414	415	375	5	1	QUAD	84
396	375	415	416	376	5	1	QUAD	84
397	376	416	417	377	5	1	QUAD	84
398	377	417	418	378	1	1	QUAD	84
399	378	418	419	379	1	1	QUAD	84
400	379	419	420	380	1	1	QUAD	84
401	380	420	421	381	1	1	QUAD	84
402	381	421	422	382	1	1	QUAD	84
403	382	422	423	383	1	1	QUAD	84
404	383	423	424	384	1	1	QUAD	84
405	384	424	425	385	1	1	QUAD	84
406	385	425	426	386	1	1	QUAD	84
407	386	426	427	387	1	1	QUAD	84
408	387	427	428	388	1	1	QUAD	84
409	388	428	429	389	1	1	QUAD	84
410	389	429	430	390	4	6	QUAD	84
411	390	430	431	391	4	7	QUAD	84
412	391	431	432	392	4	7	QUAD	84
413	392	432	433	393	4	8	QUAD	84
414	393	433	434	394	4	8	QUAD	84
415	394	434	435	395	4	9	QUAD	84
416	395	435	436	396	4	9	QUAD	84
417	396	436	437	397	4	10	QUAD	84
418	397	437	438	398	4	10	QUAD	84
419	398	438	439	399	4	11	QUAD	84
420	399	439	440	400	4	11	QUAD	84
421	401	441	442	402	6	1	QUAD	84
422	402	442	443	403	6	1	QUAD	84
423	403	443	444	404	6	1	QUAD	84
424	404	444	445	405	6	1	QUAD	84
425	405	445	446	406	6	1	QUAD	84
426	406	446	447	407	6	1	QUAD	84
427	407	447	448	408	6	1	QUAD	84
428	408	448	449	409	6	1	QUAD	84
429	409	449	450	410	5	1	QUAD	84
430	410	450	451	411	5	1	QUAD	84
431	411	451	452	412	5	1	QUAD	84
432	412	452	453	413	5	1	QUAD	84
433	413	453	454	414	5	1	QUAD	84
434	414	454	455	415	5	1	QUAD	84
435	415	455	456	416	5	1	QUAD	84
436	416	456	457	417	5	1	QUAD	84
437	417	457	458	418	1	1	QUAD	84
438	418	458	459	419	1	1	QUAD	84
439	419	459	460	420	1	1	QUAD	84
440	420	460	461	421	1	1	QUAD	84
441	421	461	462	422	1	1	QUAD	84
442	422	462	463	423	1	1	QUAD	84
443	423	463	464	424	1	1	QUAD	84
444	424	464	465	425	1	1	QUAD	84
445	425	465	466	426	1	1	QUAD	84
446	426	466	467	427	1	1	QUAD	84
447	427	467	468	428	1	1	QUAD	84
448	428	468	469	429	1	1	QUAD	84
449	429	469	470	430	4	6	QUAD	84

E	I	J	K	L	M	Incr	T	BW
450	430	470	471	431	4	7	QUAD	84
451	431	471	472	432	4	7	QUAD	84
452	432	472	473	433	4	8	QUAD	84
453	433	473	474	434	4	8	QUAD	84
454	434	474	475	435	4	9	QUAD	84
455	435	475	476	436	4	9	QUAD	84
456	436	476	477	437	4	10	QUAD	84
457	437	477	478	438	4	10	QUAD	84
458	438	478	479	439	4	11	QUAD	84
459	439	479	480	440	4	11	QUAD	84
460	441	481	482	442	6	1	QUAD	84
461	442	482	483	443	6	1	QUAD	84
462	443	483	484	444	6	1	QUAD	84
463	444	484	485	445	6	1	QUAD	84
464	445	485	486	446	6	1	QUAD	84
465	446	486	487	447	6	1	QUAD	84
466	447	487	488	448	6	1	QUAD	84
467	448	488	489	449	6	1	QUAD	84
468	449	489	490	450	5	1	QUAD	84
469	450	490	491	451	5	1	QUAD	84
470	451	491	492	452	5	1	QUAD	84
471	452	492	493	453	5	1	QUAD	84
472	453	493	494	454	5	1	QUAD	84
473	454	494	495	455	5	1	QUAD	84
474	455	495	496	456	5	1	QUAD	84
475	456	496	497	457	5	1	QUAD	84
476	457	497	498	458	1	1	QUAD	84
477	458	498	499	459	1	1	QUAD	84
478	459	499	500	460	1	1	QUAD	84
479	460	500	501	461	1	1	QUAD	84
480	461	501	502	462	1	1	QUAD	84
481	462	502	503	463	1	1	QUAD	84
482	463	503	504	464	1	1	QUAD	84
483	464	504	505	465	1	1	QUAD	84
484	465	505	506	466	1	1	QUAD	84
485	466	506	507	467	1	1	QUAD	84
486	467	507	508	468	1	1	QUAD	84
487	468	508	509	469	4	5	QUAD	84
488	469	509	510	470	4	6	QUAD	84
489	470	510	511	471	4	7	QUAD	84
490	471	511	512	472	4	7	QUAD	84
491	472	512	513	473	4	8	QUAD	84
492	473	513	514	474	4	8	QUAD	84
493	474	514	515	475	4	9	QUAD	84
494	475	515	516	476	4	9	QUAD	84
495	476	516	517	477	4	10	QUAD	84
496	477	517	518	478	4	10	QUAD	84
497	478	518	519	479	4	11	QUAD	84
498	479	519	520	480	4	11	QUAD	84
499	481	521	522	482	6	1	QUAD	84
500	482	522	523	483	6	1	QUAD	84
501	483	523	524	484	6	1	QUAD	84
502	484	524	525	485	6	1	QUAD	84
503	485	525	526	486	6	1	QUAD	84
504	486	526	527	487	6	1	QUAD	84
505	487	527	528	488	6	1	QUAD	84
506	488	528	529	489	6	1	QUAD	84
507	489	529	530	490	5	1	QUAD	84
508	490	530	531	491	5	1	QUAD	84
509	491	531	532	492	5	1	QUAD	84
510	492	532	533	493	5	1	QUAD	84
511	493	533	534	494	5	1	QUAD	84
512	494	534	535	495	5	1	QUAD	84
513	495	535	536	496	5	1	QUAD	84
514	496	536	537	497	5	1	QUAD	84
515	497	537	538	498	1	1	QUAD	84
516	498	538	539	499	1	1	QUAD	84
517	499	539	540	500	1	1	QUAD	84
518	500	540	541	501	1	1	QUAD	84
519	501	541	542	502	1	1	QUAD	84
520	502	542	543	503	1	1	QUAD	84

E	I	J	K	L	M	Incr	T	BW
521	503	543	544	504	1	1	QUAD	84
522	504	544	545	505	1	1	QUAD	84
523	505	545	546	506	1	1	QUAD	84
524	506	546	547	507	1	1	QUAD	84
525	507	547	548	508	4	5	QUAD	84
526	508	548	549	509	4	5	QUAD	84
527	509	549	550	510	4	6	QUAD	84
528	510	550	551	511	4	7	QUAD	84
529	511	551	552	512	4	7	QUAD	84
530	512	552	553	513	4	8	QUAD	84
531	513	553	554	514	4	8	QUAD	84
532	514	554	555	515	4	9	QUAD	84
533	515	555	556	516	4	9	QUAD	84
534	516	556	557	517	4	10	QUAD	84
535	517	557	558	518	4	10	QUAD	84
536	518	558	559	519	4	11	QUAD	84
537	519	559	560	520	4	11	QUAD	84
538	521	561	562	522	6	1	QUAD	84
539	522	562	563	523	6	1	QUAD	84
540	523	563	564	524	6	1	QUAD	84
541	524	564	565	525	6	1	QUAD	84
542	525	565	566	526	6	1	QUAD	84
543	526	566	567	527	6	1	QUAD	84
544	527	567	568	528	6	1	QUAD	84
545	528	568	569	529	6	1	QUAD	84
546	529	569	570	530	5	1	QUAD	84
547	530	570	571	531	5	1	QUAD	84
548	531	571	572	532	5	1	QUAD	84
549	532	572	573	533	5	1	QUAD	84
550	533	573	574	534	5	1	QUAD	84
551	534	574	575	535	5	1	QUAD	84
552	535	575	576	536	5	1	QUAD	84
553	536	576	577	537	5	1	QUAD	84
554	537	577	578	538	1	1	QUAD	84
555	538	578	579	539	1	1	QUAD	84
556	539	579	580	540	1	1	QUAD	84
557	540	580	581	541	1	1	QUAD	84
558	541	581	582	542	1	1	QUAD	84
559	542	582	583	543	1	1	QUAD	84
560	543	583	584	544	1	1	QUAD	84
561	544	584	585	545	1	1	QUAD	84
562	545	585	586	546	4	4	QUAD	84
563	546	586	587	547	4	4	QUAD	84
564	547	587	588	548	4	5	QUAD	84
565	548	588	589	549	4	5	QUAD	84
566	549	589	590	550	4	6	QUAD	84
567	550	590	591	551	4	7	QUAD	84
568	551	591	592	552	4	7	QUAD	84
569	552	592	593	553	4	8	QUAD	84
570	553	593	594	554	4	8	QUAD	84
571	554	594	595	555	4	9	QUAD	84
572	555	595	596	556	4	9	QUAD	84
573	556	596	597	557	4	10	QUAD	84
574	557	597	598	558	4	10	QUAD	84
575	558	598	599	559	4	11	QUAD	84
576	559	599	600	560	4	11	QUAD	84
577	561	601	602	562	6	1	QUAD	84
578	562	602	603	563	6	1	QUAD	84
579	563	603	604	564	6	1	QUAD	84
580	564	604	605	565	6	1	QUAD	84
581	565	605	606	566	6	1	QUAD	84
582	566	606	607	567	6	1	QUAD	84
583	567	607	608	568	6	1	QUAD	84
584	568	608	609	569	6	1	QUAD	84
585	569	609	610	570	5	1	QUAD	84
586	570	610	611	571	5	1	QUAD	84
587	571	611	612	572	5	1	QUAD	84
588	572	612	613	573	5	1	QUAD	84
589	573	613	614	574	5	1	QUAD	84
590	574	614	615	575	5	1	QUAD	84
591	575	615	616	576	5	1	QUAD	84

E	I	J	K	L	M	Incr	T	BW
592	576	616	617	577	5	1	QUAD	84
593	577	617	618	578	1	1	QUAD	84
594	578	618	619	579	1	1	QUAD	84
595	579	619	620	580	1	1	QUAD	84
596	580	620	621	581	1	1	QUAD	84
597	581	621	622	582	1	1	QUAD	84
598	582	622	623	583	1	1	QUAD	84
599	583	623	624	584	1	1	QUAD	84
600	584	624	625	585	4	4	QUAD	84
601	585	625	626	586	4	4	QUAD	84
602	586	626	627	587	4	4	QUAD	84
603	587	627	628	588	4	5	QUAD	84
604	588	628	629	589	4	5	QUAD	84
605	589	629	630	590	4	6	QUAD	84
606	590	630	631	591	4	7	QUAD	84
607	591	631	632	592	4	7	QUAD	84
608	592	632	633	593	4	8	QUAD	84
609	593	633	634	594	4	8	QUAD	84
610	594	634	635	595	4	9	QUAD	84
611	595	635	636	596	4	9	QUAD	84
612	596	636	637	597	4	10	QUAD	84
613	597	637	638	598	4	10	QUAD	84
614	598	638	639	599	4	11	QUAD	84
615	599	639	640	600	4	11	QUAD	84
616	601	641	642	602	6	1	QUAD	84
617	602	642	643	603	6	1	QUAD	84
618	603	643	644	604	6	1	QUAD	84
619	604	644	645	605	6	1	QUAD	84
620	605	645	646	606	6	1	QUAD	84
621	606	646	647	607	6	1	QUAD	84
622	607	647	648	608	6	1	QUAD	84
623	608	648	649	609	6	1	QUAD	84
624	609	649	650	610	5	1	QUAD	84
625	610	650	651	611	5	1	QUAD	84
626	611	651	652	612	5	1	QUAD	84
627	612	652	653	613	5	1	QUAD	84
628	613	653	654	614	5	1	QUAD	84
629	614	654	655	615	5	1	QUAD	84
630	615	655	656	616	5	1	QUAD	84
631	616	656	657	617	5	1	QUAD	84
632	617	657	658	618	1	1	QUAD	84
633	618	658	659	619	1	1	QUAD	84
634	619	659	660	620	1	1	QUAD	84
635	620	660	661	621	1	1	QUAD	84
636	621	661	662	622	1	1	QUAD	84
637	622	662	663	623	1	1	QUAD	84
638	623	663	664	624	4	3	QUAD	84
639	624	664	665	625	4	4	QUAD	84
640	625	665	666	626	4	4	QUAD	84
641	626	666	667	627	4	4	QUAD	84
642	627	667	668	628	4	5	QUAD	84
643	628	668	669	629	4	5	QUAD	84
644	629	669	670	630	4	6	QUAD	84
645	630	670	671	631	4	7	QUAD	84
646	631	671	672	632	4	7	QUAD	84
647	632	672	673	633	4	8	QUAD	84
648	633	673	674	634	4	8	QUAD	84
649	634	674	675	635	4	9	QUAD	84
650	635	675	676	636	4	9	QUAD	84
651	636	676	677	637	4	10	QUAD	84
652	637	677	678	638	4	10	QUAD	84
653	638	678	679	639	4	11	QUAD	84
654	639	679	680	640	4	11	QUAD	84
655	641	681	682	642	6	1	QUAD	84
656	642	682	683	643	6	1	QUAD	84
657	643	683	684	644	6	1	QUAD	84
658	644	684	685	645	6	1	QUAD	84
659	645	685	686	646	6	1	QUAD	84
660	646	686	687	647	6	1	QUAD	84
661	647	687	688	648	6	1	QUAD	84
662	648	688	689	649	6	1	QUAD	84

E	I	J	K	L	M	Incr	T	BW
663	649	689	690	650	5	1	QUAD	84
664	650	690	691	651	5	1	QUAD	84
665	651	691	692	652	5	1	QUAD	84
666	652	692	693	653	5	1	QUAD	84
667	653	693	694	654	5	1	QUAD	84
668	654	694	695	655	5	1	QUAD	84
669	655	695	696	656	5	1	QUAD	84
670	656	696	697	657	5	1	QUAD	84
671	657	697	698	658	1	1	QUAD	84
672	658	698	699	659	1	1	QUAD	84
673	659	699	700	660	1	1	QUAD	84
674	660	700	701	661	1	1	QUAD	84
675	661	701	702	662	1	1	QUAD	84
676	662	702	703	663	4	3	QUAD	84
677	663	703	704	664	4	3	QUAD	84
678	664	704	705	665	4	4	QUAD	84
679	665	705	706	666	4	4	QUAD	84
680	666	706	707	667	4	4	QUAD	84
681	667	707	708	668	4	5	QUAD	84
682	668	708	709	669	4	5	QUAD	84
683	669	709	710	670	4	6	QUAD	84
684	670	710	711	671	4	7	QUAD	84
685	671	711	712	672	4	7	QUAD	84
686	672	712	713	673	4	8	QUAD	84
687	673	713	714	674	4	8	QUAD	84
688	674	714	715	675	4	9	QUAD	84
689	675	715	716	676	4	9	QUAD	84
690	676	716	717	677	4	10	QUAD	84
691	677	717	718	678	4	10	QUAD	84
692	678	718	719	679	4	11	QUAD	84
693	679	719	720	680	4	11	QUAD	84
694	681	721	722	682	6	1	QUAD	84
695	682	722	723	683	6	1	QUAD	84
696	683	723	724	684	6	1	QUAD	84
697	684	724	725	685	6	1	QUAD	84
698	685	725	726	686	6	1	QUAD	84
699	686	726	727	687	6	1	QUAD	84
700	687	727	728	688	6	1	QUAD	84
701	688	728	729	689	6	1	QUAD	84
702	689	729	730	690	5	1	QUAD	84
703	690	730	731	691	5	1	QUAD	84
704	691	731	732	692	5	1	QUAD	84
705	692	732	733	693	5	1	QUAD	84
706	693	733	734	694	5	1	QUAD	84
707	694	734	735	695	5	1	QUAD	84
708	695	735	736	696	5	1	QUAD	84
709	696	736	737	697	5	1	QUAD	84
710	697	737	738	698	1	1	QUAD	84
711	698	738	739	699	1	1	QUAD	84
712	699	739	740	700	1	1	QUAD	84
713	700	740	741	701	1	1	QUAD	84
714	701	741	742	702	4	3	QUAD	84
715	702	742	743	703	4	3	QUAD	84
716	703	743	744	704	4	3	QUAD	84
717	704	744	745	705	4	4	QUAD	84
718	705	745	746	706	4	4	QUAD	84
719	706	746	747	707	4	4	QUAD	84
720	707	747	748	708	4	5	QUAD	84
721	708	748	749	709	4	5	QUAD	84
722	709	749	750	710	4	6	QUAD	84
723	710	750	751	711	4	7	QUAD	84
724	711	751	752	712	4	7	QUAD	84
725	712	752	753	713	4	8	QUAD	84
726	713	753	754	714	4	8	QUAD	84
727	714	754	755	715	4	9	QUAD	84
728	715	755	756	716	4	9	QUAD	84
729	716	756	757	717	4	10	QUAD	84
730	717	757	758	718	4	10	QUAD	84
731	718	758	759	719	4	11	QUAD	84
732	719	759	760	720	4	11	QUAD	84
733	721	761	762	722	6	1	QUAD	84

E	I	J	K	L	M	Incr	T	BW
734	722	762	763	723	6	1	QUAD	84
735	723	763	764	724	6	1	QUAD	84
736	724	764	765	725	6	1	QUAD	84
737	725	765	766	726	6	1	QUAD	84
738	726	766	767	727	6	1	QUAD	84
739	727	767	768	728	6	1	QUAD	84
740	728	768	769	729	6	1	QUAD	84
741	729	769	770	730	5	1	QUAD	84
742	730	770	771	731	5	1	QUAD	84
743	731	771	772	732	5	1	QUAD	84
744	732	772	773	733	5	1	QUAD	84
745	733	773	774	734	5	1	QUAD	84
746	734	774	775	735	3	1	QUAD	84
747	735	775	776	736	3	1	QUAD	84
748	736	776	777	737	5	1	QUAD	84
749	737	777	778	738	1	1	QUAD	84
750	738	778	779	739	1	1	QUAD	84
751	739	779	780	740	2	2	QUAD	84
752	740	780	781	741	4	2	QUAD	84
753	741	781	782	742	4	3	QUAD	84
754	742	782	783	743	4	3	QUAD	84
755	743	783	784	744	4	3	QUAD	84
756	744	784	785	745	4	4	QUAD	84
757	745	785	786	746	4	4	QUAD	84
758	746	786	787	747	4	4	QUAD	84
759	747	787	788	748	4	5	QUAD	84
760	748	788	789	749	4	5	QUAD	84
761	749	789	790	750	4	6	QUAD	84
762	750	790	791	751	4	7	QUAD	84
763	751	791	792	752	4	7	QUAD	84
764	752	792	793	753	4	8	QUAD	84
765	753	793	794	754	4	8	QUAD	84
766	754	794	795	755	4	9	QUAD	84
767	755	795	796	756	4	9	QUAD	84
768	756	796	797	757	4	10	QUAD	84
769	757	797	798	758	4	10	QUAD	84
770	758	798	799	759	4	11	QUAD	84
771	759	799	800	760	4	11	QUAD	84
772	761	801	802	762	6	1	QUAD	84
773	762	802	803	763	6	1	QUAD	84
774	763	803	804	764	6	1	QUAD	84
775	764	804	805	765	6	1	QUAD	84
776	765	805	806	766	6	1	QUAD	84
777	766	806	807	767	6	1	QUAD	84
778	767	807	808	768	6	1	QUAD	84
779	768	808	809	769	6	1	QUAD	84
780	769	809	810	770	5	1	QUAD	84
781	770	810	811	771	5	1	QUAD	84
782	771	811	812	772	5	1	QUAD	84
783	772	812	813	773	5	1	QUAD	84
784	773	813	814	774	5	1	QUAD	84
785	774	814	815	775	3	1	QUAD	84
786	775	815	816	776	3	1	QUAD	84
787	776	816	817	777	5	1	QUAD	84
788	777	817	818	778	1	1	QUAD	84
789	778	818	819	779	1	1	QUAD	84
790	779	819	820	780	2	2	QUAD	84
791	780	820	821	781	2	2	QUAD	84
792	781	821	822	782	2	3	QUAD	84
793	782	822	823	783	2	3	QUAD	84
794	783	823	824	784	4	3	QUAD	84
795	784	824	825	785	4	4	QUAD	84
796	785	825	826	786	4	4	QUAD	84
797	786	826	827	787	4	4	QUAD	84
798	787	827	828	788	4	5	QUAD	84
799	788	828	829	789	4	5	QUAD	84
800	789	829	830	790	4	6	QUAD	84
801	790	830	831	791	4	7	QUAD	84
802	791	831	832	792	4	7	QUAD	84
803	792	832	833	793	4	8	QUAD	84
804	793	833	834	794	4	8	QUAD	84

E	I	J	K	L	M	Incr	T	BW
805	794	834	835	795	4	9	QUAD	84
806	795	835	836	796	4	9	QUAD	84
807	796	836	837	797	4	10	QUAD	84
808	797	837	838	798	4	10	QUAD	84
809	798	838	839	799	4	11	QUAD	84
810	799	839	840	800	4	11	QUAD	84
811	801	841	842	802	6	1	QUAD	84
812	802	842	843	803	6	1	QUAD	84
813	803	843	844	804	6	1	QUAD	84
814	804	844	845	805	6	1	QUAD	84
815	805	845	846	806	6	1	QUAD	84
816	806	846	847	807	6	1	QUAD	84
817	807	847	848	808	6	1	QUAD	84
818	808	848	849	809	6	1	QUAD	84
819	809	849	850	810	5	1	QUAD	84
820	810	850	851	811	5	1	QUAD	84
821	811	851	852	812	5	1	QUAD	84
822	812	852	853	813	5	1	QUAD	84
823	813	853	854	814	5	1	QUAD	84
824	814	854	855	815	3	1	QUAD	84
825	815	855	856	816	3	1	QUAD	84
826	816	856	857	817	3	1	QUAD	84
827	817	857	858	818	3	1	QUAD	84
828	818	858	859	819	3	1	QUAD	84
829	819	859	860	820	2	2	QUAD	84
830	820	860	861	821	2	2	QUAD	84
831	821	861	862	822	2	3	QUAD	84
832	822	862	863	823	2	3	QUAD	84
833	823	863	864	824	2	3	QUAD	84
834	824	864	865	825	2	4	QUAD	84
835	825	865	866	826	4	4	QUAD	84
836	826	866	867	827	4	4	QUAD	84
837	827	867	868	828	4	5	QUAD	84
838	828	868	869	829	4	5	QUAD	84
839	829	869	870	830	4	6	QUAD	84
840	830	870	871	831	4	7	QUAD	84
841	831	871	872	832	4	7	QUAD	84
842	832	872	873	833	4	8	QUAD	84
843	833	873	874	834	4	8	QUAD	84
844	834	874	875	835	4	9	QUAD	84
845	835	875	876	836	4	9	QUAD	84
846	836	876	877	837	4	10	QUAD	84
847	837	877	878	838	4	10	QUAD	84
848	838	878	879	839	4	11	QUAD	84
849	839	879	880	840	4	11	QUAD	84
850	841	882	883	842	6	1	QUAD	86
851	842	883	884	843	6	1	QUAD	86
852	843	884	885	844	6	1	QUAD	86
853	844	885	886	845	6	1	QUAD	86
854	845	886	887	846	6	1	QUAD	86
855	846	887	888	847	6	1	QUAD	86
856	847	888	889	848	6	1	QUAD	86
857	848	889	890	849	6	1	QUAD	86
858	849	890	891	850	5	1	QUAD	86
859	850	891	892	851	5	1	QUAD	86
860	851	892	893	852	5	1	QUAD	86
861	852	893	894	853	5	1	QUAD	86
862	853	894	895	854	5	1	QUAD	86
863	854	895	896	855	3	1	QUAD	86
864	855	896	897	856	3	1	QUAD	86
865	856	897	898	857	3	1	QUAD	86
866	857	898	899	858	3	1	QUAD	86
867	858	899	900	859	3	1	QUAD	86
868	859	881	860	0	2	2	TRI.	46
869	881	861	860	0	2	2	TRI.	44
870	861	901	862	0	2	3	TRI.	82
871	920	901	861	0	2	3	TRI.	120
872	861	881	920	0	2	2	TRI.	120
873	862	901	902	863	2	3	QUAD	82
874	863	902	903	864	2	3	QUAD	82
875	864	903	904	865	2	4	QUAD	82

E	I	J	K	L	M	Incr	T	BW
876	865	904	905	866	2	4	QUAD	82
877	866	905	906	867	2	4	QUAD	82
878	867	906	907	868	4	5	QUAD	82
879	868	907	908	869	4	5	QUAD	82
880	869	908	909	870	4	6	QUAD	82
881	870	909	910	871	4	7	QUAD	82
882	871	910	911	872	4	7	QUAD	82
883	872	911	912	873	4	8	QUAD	82
884	873	912	913	874	4	8	QUAD	82
885	874	913	914	875	4	9	QUAD	82
886	875	914	915	876	4	9	QUAD	82
887	876	915	916	877	4	10	QUAD	82
888	877	916	917	878	4	10	QUAD	82
889	878	917	918	879	4	11	QUAD	82
890	879	918	919	880	4	11	QUAD	82
891	882	922	923	883	6	1	QUAD	84
892	883	923	924	884	6	1	QUAD	84
893	884	924	925	885	6	1	QUAD	84
894	885	925	926	886	6	1	QUAD	84
895	886	926	927	887	6	1	QUAD	84
896	887	927	928	888	6	1	QUAD	84
897	888	928	929	889	6	1	QUAD	84
898	889	929	930	890	6	1	QUAD	84
899	890	930	931	891	5	1	QUAD	84
900	891	931	932	892	5	1	QUAD	84
901	892	932	933	893	5	1	QUAD	84
902	893	933	934	894	5	1	QUAD	84
903	894	934	935	895	5	1	QUAD	84
904	895	935	936	896	3	1	QUAD	84
905	896	936	937	897	3	1	QUAD	84
906	897	937	938	898	5	1	QUAD	84
907	898	938	939	899	1	1	QUAD	84
908	899	939	940	900	1	1	QUAD	84
909	921	941	902	901	2	3	QUAD	82
910	901	920	921	0	2	3	TRI.	42
911	902	941	942	903	2	3	QUAD	82
912	903	942	943	904	2	4	QUAD	82
913	904	943	944	905	2	4	QUAD	82
914	905	944	945	906	2	4	QUAD	82
915	906	945	946	907	4	5	QUAD	82
916	907	946	947	908	4	5	QUAD	82
917	908	947	948	909	4	6	QUAD	82
918	909	948	949	910	4	7	QUAD	82
919	910	949	950	911	4	7	QUAD	82
920	911	950	951	912	4	8	QUAD	82
921	912	951	952	913	4	8	QUAD	82
922	913	952	953	914	4	9	QUAD	82
923	914	953	954	915	4	9	QUAD	82
924	915	954	955	916	4	10	QUAD	82
925	916	955	956	917	4	10	QUAD	82
926	917	956	957	918	4	11	QUAD	82
927	918	957	958	919	4	11	QUAD	82
928	921	959	941	0	2	3	TRI.	78
929	922	960	961	923	6	1	QUAD	80
930	923	961	962	924	6	1	QUAD	80
931	924	962	963	925	6	1	QUAD	80
932	925	963	964	926	6	1	QUAD	80
933	926	964	965	927	6	1	QUAD	80
934	927	965	966	928	6	1	QUAD	80
935	928	966	967	929	6	1	QUAD	80
936	929	967	968	930	6	1	QUAD	80
937	930	968	969	931	5	1	QUAD	80
938	931	969	970	932	5	1	QUAD	80
939	932	970	971	933	5	1	QUAD	80
940	933	971	972	934	5	1	QUAD	80
941	934	972	973	935	5	1	QUAD	80
942	935	973	974	936	3	1	QUAD	80
943	936	974	975	937	3	1	QUAD	80
944	937	975	976	938	5	1	QUAD	80
945	938	976	977	939	1	1	QUAD	80
946	939	977	978	940	1	1	QUAD	80

E	I	J	K	L	M	Incr	T	BW
947	959	979	942	941	2	3	QUAD	78
948	942	979	980	943	2	4	QUAD	78
949	943	980	981	944	2	4	QUAD	78
950	944	981	982	945	2	4	QUAD	78
951	945	982	983	946	4	5	QUAD	78
952	946	983	984	947	4	5	QUAD	78
953	947	984	985	948	4	6	QUAD	78
954	948	985	986	949	4	7	QUAD	78
955	949	986	987	950	4	7	QUAD	78
956	950	987	988	951	4	8	QUAD	78
957	951	988	989	952	4	8	QUAD	78
958	952	989	990	953	4	9	QUAD	78
959	953	990	991	954	4	9	QUAD	78
960	954	991	992	955	4	10	QUAD	78
961	955	992	993	956	4	10	QUAD	78
962	956	993	994	957	4	11	QUAD	78
963	957	994	995	958	4	11	QUAD	78
964	959	996	979	0	2	3	TRI.	76
965	960	1013	1014	961	6	1	QUAD	110
966	961	1014	1015	962	6	1	QUAD	110
967	962	1015	1016	963	6	1	QUAD	110
968	963	1016	1017	964	6	1	QUAD	110
969	964	1017	1018	965	6	1	QUAD	110
970	965	1018	1019	966	6	1	QUAD	110
971	966	1019	1020	967	6	1	QUAD	110
972	967	1020	1021	968	6	1	QUAD	110
973	968	1021	1022	969	5	1	QUAD	110
974	969	1022	1023	970	5	1	QUAD	110
975	970	1023	1024	971	5	1	QUAD	110
976	971	1024	1025	972	5	1	QUAD	110
977	972	1025	1026	973	5	1	QUAD	110
978	973	1026	1027	974	3	1	QUAD	110
979	974	1027	1028	975	3	1	QUAD	110
980	975	1028	1029	976	5	1	QUAD	110
981	976	1029	1030	977	1	1	QUAD	110
982	977	1030	1031	978	1	1	QUAD	110
983	996	997	980	979	2	4	QUAD	38
984	980	997	998	981	2	4	QUAD	38
985	981	998	999	982	2	4	QUAD	38
986	982	999	1000	983	4	5	QUAD	38
987	983	1000	1001	984	4	5	QUAD	38
988	984	1001	1002	985	4	6	QUAD	38
989	985	1002	1003	986	4	7	QUAD	38
990	986	1003	1004	987	4	7	QUAD	38
991	987	1004	1005	988	4	8	QUAD	38
992	988	1005	1006	989	4	8	QUAD	38
993	989	1006	1007	990	4	9	QUAD	38
994	990	1007	1008	991	4	9	QUAD	38
995	991	1008	1009	992	4	10	QUAD	38
996	992	1009	1010	993	4	10	QUAD	38
997	993	1010	1011	994	4	11	QUAD	38
998	994	1011	1012	995	4	11	QUAD	38
999	996	1032	997	0	2	4	TRI.	74
1000	1032	1047	998	997	2	4	QUAD	102
1001	1047	1033	999	998	2	4	QUAD	100
1002	999	1033	1034	1000	4	5	QUAD	72
1003	1000	1034	1035	1001	4	5	QUAD	72
1004	1001	1035	1036	1002	4	6	QUAD	72
1005	1002	1036	1037	1003	4	7	QUAD	72
1006	1003	1037	1038	1004	4	7	QUAD	72
1007	1004	1038	1039	1005	4	8	QUAD	72
1008	1005	1039	1040	1006	4	8	QUAD	72
1009	1006	1040	1041	1007	4	9	QUAD	72
1010	1007	1041	1042	1008	4	9	QUAD	72
1011	1008	1042	1043	1009	4	10	QUAD	72
1012	1009	1043	1044	1010	4	10	QUAD	72
1013	1010	1044	1045	1011	4	11	QUAD	72
1014	1011	1045	1046	1012	4	11	QUAD	72
1015	1013	1063	1064	1014	6	1	QUAD	104
1016	1014	1064	1065	1015	6	1	QUAD	104
1017	1015	1065	1066	1016	6	1	QUAD	104

E	I	J	K	L	M	Incr	T	BW
1018	1016	1066	1067	1017	6	1	QUAD	104
1019	1017	1067	1068	1018	6	1	QUAD	104
1020	1018	1068	1069	1019	6	1	QUAD	104
1021	1019	1069	1070	1020	6	1	QUAD	104
1022	1020	1070	1071	1021	6	1	QUAD	104
1023	1021	1071	1072	1022	5	1	QUAD	104
1024	1022	1072	1073	1023	5	1	QUAD	104
1025	1023	1073	1074	1024	5	1	QUAD	104
1026	1024	1074	1075	1025	5	1	QUAD	104
1027	1025	1075	1076	1026	5	1	QUAD	104
1028	1026	1076	1077	1027	3	1	QUAD	104
1029	1027	1077	1078	1028	3	1	QUAD	104
1030	1028	1078	1079	1029	5	1	QUAD	104
1031	1029	1079	1080	1030	1	1	QUAD	104
1032	1030	1080	1081	1031	1	1	QUAD	104
1033	1048	1049	1033	0	4	5	TRI.	34
1034	1033	1047	1048	0	2	4	TRI.	32
1035	1033	1049	1050	1034	4	5	QUAD	36
1036	1034	1050	1051	1035	4	5	QUAD	36
1037	1035	1051	1052	1036	4	6	QUAD	36
1038	1036	1052	1053	1037	4	7	QUAD	36
1039	1037	1053	1054	1038	4	7	QUAD	36
1040	1038	1054	1055	1039	4	8	QUAD	36
1041	1039	1055	1056	1040	4	8	QUAD	36
1042	1040	1056	1057	1041	4	9	QUAD	36
1043	1041	1057	1058	1042	4	9	QUAD	36
1044	1042	1058	1059	1043	4	10	QUAD	36
1045	1043	1059	1060	1044	4	10	QUAD	36
1046	1044	1060	1061	1045	4	11	QUAD	36
1047	1045	1061	1062	1046	4	11	QUAD	36
1048	1048	1082	1083	1049	4	5	QUAD	72
1049	1049	1083	1084	1050	4	5	QUAD	72
1050	1050	1084	1085	1051	4	5	QUAD	72
1051	1051	1085	1086	1052	4	6	QUAD	72
1052	1052	1086	1087	1053	4	7	QUAD	72
1053	1053	1087	1088	1054	4	7	QUAD	72
1054	1054	1088	1089	1055	4	8	QUAD	72
1055	1055	1089	1090	1056	4	8	QUAD	72
1056	1056	1090	1091	1057	4	9	QUAD	72
1057	1057	1091	1092	1058	4	9	QUAD	72
1058	1058	1092	1093	1059	4	10	QUAD	72
1059	1059	1093	1094	1060	4	10	QUAD	72
1060	1060	1094	1095	1061	4	11	QUAD	72
1061	1061	1095	1096	1062	4	11	QUAD	72
1062	1063	1112	1113	1064	6	1	QUAD	102
1063	1064	1113	1114	1065	6	1	QUAD	102
1064	1065	1114	1115	1066	6	1	QUAD	102
1065	1066	1115	1116	1067	6	1	QUAD	102
1066	1067	1116	1117	1068	6	1	QUAD	102
1067	1068	1117	1118	1069	6	1	QUAD	102
1068	1069	1118	1119	1070	6	1	QUAD	102
1069	1070	1119	1120	1071	6	1	QUAD	102
1070	1071	1120	1121	1072	5	1	QUAD	102
1071	1072	1121	1122	1073	5	1	QUAD	102
1072	1073	1122	1123	1074	5	1	QUAD	102
1073	1074	1123	1124	1075	5	1	QUAD	102
1074	1075	1124	1125	1076	5	1	QUAD	102
1075	1076	1125	1126	1077	3	1	QUAD	102
1076	1077	1126	1127	1078	3	1	QUAD	102
1077	1078	1127	1128	1079	5	1	QUAD	102
1078	1079	1128	1129	1080	1	1	QUAD	102
1079	1080	1129	1130	1081	1	1	QUAD	102
1080	1082	1097	1098	1083	4	5	QUAD	34
1081	1083	1098	1099	1084	4	5	QUAD	34
1082	1084	1099	1100	1085	4	5	QUAD	34
1083	1085	1100	1101	1086	4	6	QUAD	34
1084	1086	1101	1102	1087	4	7	QUAD	34
1085	1087	1102	1103	1088	4	7	QUAD	34
1086	1088	1103	1104	1089	4	8	QUAD	34
1087	1089	1104	1105	1090	4	8	QUAD	34
1088	1090	1105	1106	1091	4	9	QUAD	34

E	I	J	K	L	M	Incr	T	BW
1089	1091	1106	1107	1092	4	9	QUAD	34
1090	1092	1107	1108	1093	4	10	QUAD	34
1091	1093	1108	1109	1094	4	10	QUAD	34
1092	1094	1109	1110	1095	4	11	QUAD	34
1093	1095	1110	1111	1096	4	11	QUAD	34
1094	1097	1131	1132	1098	4	5	QUAD	72
1095	1098	1132	1099	0	4	5	TRI.	70
1096	1099	1132	1133	1100	4	5	QUAD	70
1097	1100	1133	1134	1101	4	6	QUAD	70
1098	1101	1134	1135	1102	4	7	QUAD	70
1099	1102	1135	1136	1103	4	7	QUAD	70
1100	1103	1136	1137	1104	4	8	QUAD	70
1101	1104	1137	1138	1105	4	8	QUAD	70
1102	1105	1138	1139	1106	4	9	QUAD	70
1103	1106	1139	1140	1107	4	9	QUAD	70
1104	1107	1140	1141	1108	4	10	QUAD	70
1105	1108	1141	1142	1109	4	10	QUAD	70
1106	1109	1142	1143	1110	4	11	QUAD	70
1107	1110	1143	1144	1111	4	11	QUAD	70
1108	1112	1145	1146	1113	6	1	QUAD	70
1109	1113	1146	1147	1114	6	1	QUAD	70
1110	1114	1147	1148	1115	6	1	QUAD	70
1111	1115	1148	1149	1116	6	1	QUAD	70
1112	1116	1149	1150	1117	6	1	QUAD	70
1113	1117	1150	1151	1118	6	1	QUAD	70
1114	1118	1151	1152	1119	6	1	QUAD	70
1115	1119	1152	1153	1120	6	1	QUAD	70
1116	1120	1153	1154	1121	5	1	QUAD	70
1117	1121	1154	1155	1122	5	1	QUAD	70
1118	1122	1155	1156	1123	5	1	QUAD	70
1119	1123	1156	1157	1124	5	1	QUAD	70
1120	1124	1157	1158	1125	5	1	QUAD	70
1121	1125	1158	1159	1126	3	1	QUAD	70
1122	1126	1159	1160	1127	3	1	QUAD	70
1123	1127	1160	1161	1128	5	1	QUAD	70
1124	1128	1161	1162	1129	1	1	QUAD	70
1125	1129	1162	1163	1130	1	1	QUAD	70
1126	1131	1164	1165	1132	4	5	QUAD	70
1127	1132	1165	1166	1133	4	5	QUAD	70
1128	1133	1166	1167	1134	4	6	QUAD	70
1129	1134	1167	1168	1135	4	7	QUAD	70
1130	1135	1168	1169	1136	4	7	QUAD	70
1131	1136	1169	1170	1137	4	8	QUAD	70
1132	1137	1170	1171	1138	4	8	QUAD	70
1133	1138	1171	1172	1139	4	9	QUAD	70
1134	1139	1172	1173	1140	4	9	QUAD	70
1135	1140	1173	1174	1141	4	10	QUAD	70
1136	1141	1174	1175	1142	4	10	QUAD	70
1137	1142	1175	1176	1143	4	11	QUAD	70
1138	1143	1176	1177	1144	4	11	QUAD	70
1139	1145	1192	1193	1146	6	1	QUAD	98
1140	1146	1193	1194	1147	6	1	QUAD	98
1141	1147	1194	1195	1148	6	1	QUAD	98
1142	1148	1195	1196	1149	6	1	QUAD	98
1143	1149	1196	1197	1150	6	1	QUAD	98
1144	1150	1197	1198	1151	6	1	QUAD	98
1145	1151	1198	1199	1152	6	1	QUAD	98
1146	1152	1199	1200	1153	6	1	QUAD	98
1147	1153	1200	1201	1154	5	1	QUAD	98
1148	1154	1201	1202	1155	5	1	QUAD	98
1149	1155	1202	1203	1156	5	1	QUAD	98
1150	1156	1203	1204	1157	5	1	QUAD	98
1151	1157	1204	1205	1158	5	1	QUAD	98
1152	1158	1205	1206	1159	3	1	QUAD	98
1153	1159	1206	1207	1160	3	1	QUAD	98
1154	1160	1207	1208	1161	5	1	QUAD	98
1155	1161	1208	1209	1162	1	1	QUAD	98
1156	1162	1209	1210	1163	1	1	QUAD	98
1157	1164	1178	1179	1165	4	5	QUAD	32
1158	1165	1179	1180	1166	4	5	QUAD	32
1159	1166	1180	1181	1167	4	6	QUAD	32

E	I	J	K	L	M	Incr	T	BW
1160	1167	1181	1182	1168	4	7	QUAD	32
1161	1168	1182	1183	1169	4	7	QUAD	32
1162	1169	1183	1184	1170	4	8	QUAD	32
1163	1170	1184	1185	1171	4	8	QUAD	32
1164	1171	1185	1186	1172	4	9	QUAD	32
1165	1172	1186	1187	1173	4	9	QUAD	32
1166	1173	1187	1188	1174	4	10	QUAD	32
1167	1174	1188	1189	1175	4	10	QUAD	32
1168	1175	1189	1190	1176	4	11	QUAD	32
1169	1176	1190	1191	1177	4	11	QUAD	32
1170	1178	1211	1212	1179	4	5	QUAD	70
1171	1179	1212	1213	1180	4	5	QUAD	70
1172	1180	1213	1214	1181	4	6	QUAD	70
1173	1181	1214	1215	1182	4	7	QUAD	70
1174	1182	1215	1216	1183	4	7	QUAD	70
1175	1183	1216	1217	1184	4	8	QUAD	70
1176	1184	1217	1218	1185	4	8	QUAD	70
1177	1185	1218	1219	1186	4	9	QUAD	70
1178	1186	1219	1220	1187	4	9	QUAD	70
1179	1187	1220	1221	1188	4	10	QUAD	70
1180	1188	1221	1222	1189	4	10	QUAD	70
1181	1189	1222	1223	1190	4	11	QUAD	70
1182	1190	1223	1224	1191	4	11	QUAD	70
1183	1192	1225	1226	1193	6	1	QUAD	70
1184	1193	1226	1227	1194	6	1	QUAD	70
1185	1194	1227	1228	1195	6	1	QUAD	70
1186	1195	1228	1229	1196	6	1	QUAD	70
1187	1196	1229	1230	1197	6	1	QUAD	70
1188	1197	1230	1231	1198	6	1	QUAD	70
1189	1198	1231	1232	1199	6	1	QUAD	70
1190	1199	1232	1233	1200	6	1	QUAD	70
1191	1200	1233	1234	1201	5	1	QUAD	70
1192	1201	1234	1235	1202	5	1	QUAD	70
1193	1202	1235	1236	1203	5	1	QUAD	70
1194	1203	1236	1237	1204	5	1	QUAD	70
1195	1204	1237	1238	1205	5	1	QUAD	70
1196	1205	1238	1239	1206	3	1	QUAD	70
1197	1206	1239	1240	1207	3	1	QUAD	70
1198	1207	1240	1241	1208	5	1	QUAD	70
1199	1208	1241	1242	1209	1	1	QUAD	70
1200	1209	1242	1243	1210	1	1	QUAD	70
1201	1211	1244	1245	1212	4	5	QUAD	70
1202	1212	1245	1246	1213	4	5	QUAD	70
1203	1213	1246	1247	1214	4	6	QUAD	70
1204	1214	1247	1248	1215	4	7	QUAD	70
1205	1215	1248	1249	1216	4	7	QUAD	70
1206	1216	1249	1250	1217	4	8	QUAD	70
1207	1217	1250	1251	1218	4	8	QUAD	70
1208	1218	1251	1252	1219	4	9	QUAD	70
1209	1219	1252	1253	1220	4	9	QUAD	70
1210	1220	1253	1254	1221	4	10	QUAD	70
1211	1221	1254	1255	1222	4	10	QUAD	70
1212	1222	1255	1256	1223	4	11	QUAD	70
1213	1223	1256	1257	1224	4	11	QUAD	70
1214	1225	1272	1273	1226	6	1	QUAD	98
1215	1226	1273	1274	1227	6	1	QUAD	98
1216	1227	1274	1275	1228	6	1	QUAD	98
1217	1228	1275	1276	1229	6	1	QUAD	98
1218	1229	1276	1277	1230	6	1	QUAD	98
1219	1230	1277	1278	1231	6	1	QUAD	98
1220	1231	1278	1279	1232	6	1	QUAD	98
1221	1232	1279	1280	1233	6	1	QUAD	98
1222	1233	1280	1281	1234	5	1	QUAD	98
1223	1234	1281	1282	1235	5	1	QUAD	98
1224	1235	1282	1283	1236	5	1	QUAD	98
1225	1236	1283	1284	1237	5	1	QUAD	98
1226	1237	1284	1285	1238	5	1	QUAD	98
1227	1238	1285	1286	1239	3	1	QUAD	98
1228	1239	1286	1287	1240	3	1	QUAD	98
1229	1240	1287	1288	1241	5	1	QUAD	98
1230	1241	1288	1289	1242	1	1	QUAD	98

E	I	J	K	L	M	Incr	T	BW
1231	1242	1289	1290	1243	1	1	QUAD	98
1232	1244	1258	1259	1245	4	5	QUAD	32
1233	1245	1259	1260	1246	4	5	QUAD	32
1234	1246	1260	1261	1247	4	6	QUAD	32
1235	1247	1261	1262	1248	4	7	QUAD	32
1236	1248	1262	1263	1249	4	7	QUAD	32
1237	1249	1263	1264	1250	4	8	QUAD	32
1238	1250	1264	1265	1251	4	8	QUAD	32
1239	1251	1265	1266	1252	4	9	QUAD	32
1240	1252	1266	1267	1253	4	9	QUAD	32
1241	1253	1267	1268	1254	4	10	QUAD	32
1242	1254	1268	1269	1255	4	10	QUAD	32
1243	1255	1269	1270	1256	4	11	QUAD	32
1244	1256	1270	1271	1257	4	11	QUAD	32
1245	1258	1291	1292	1259	4	5	QUAD	70
1246	1259	1292	1293	1260	4	5	QUAD	70
1247	1260	1293	1294	1261	4	6	QUAD	70
1248	1261	1294	1295	1262	4	7	QUAD	70
1249	1262	1295	1296	1263	4	7	QUAD	70
1250	1263	1296	1297	1264	4	8	QUAD	70
1251	1264	1297	1298	1265	4	8	QUAD	70
1252	1265	1298	1299	1266	4	9	QUAD	70
1253	1266	1299	1300	1267	4	9	QUAD	70
1254	1267	1300	1301	1268	4	10	QUAD	70
1255	1268	1301	1302	1269	4	10	QUAD	70
1256	1269	1302	1303	1270	4	11	QUAD	70
1257	1270	1303	1304	1271	4	11	QUAD	70
1258	1272	1319	1320	1273	6	1	QUAD	98
1259	1273	1320	1321	1274	6	1	QUAD	98
1260	1274	1321	1322	1275	6	1	QUAD	98
1261	1275	1322	1323	1276	6	1	QUAD	98
1262	1276	1323	1324	1277	6	1	QUAD	98
1263	1277	1324	1325	1278	6	1	QUAD	98
1264	1278	1325	1326	1279	6	1	QUAD	98
1265	1279	1326	1327	1280	6	1	QUAD	98
1266	1280	1327	1328	1281	5	1	QUAD	98
1267	1281	1328	1329	1282	5	1	QUAD	98
1268	1282	1329	1330	1283	5	1	QUAD	98
1269	1283	1330	1331	1284	5	1	QUAD	98
1270	1284	1331	1332	1285	5	1	QUAD	98
1271	1285	1332	1333	1286	3	1	QUAD	98
1272	1286	1333	1334	1287	3	1	QUAD	98
1273	1287	1334	1335	1288	5	1	QUAD	98
1274	1288	1335	1336	1289	1	1	QUAD	98
1275	1289	1336	1337	1290	1	1	QUAD	98
1276	1291	1305	1306	1292	4	5	QUAD	32
1277	1292	1306	1307	1293	4	5	QUAD	32
1278	1293	1307	1308	1294	4	6	QUAD	32
1279	1294	1308	1309	1295	4	7	QUAD	32
1280	1295	1309	1310	1296	4	7	QUAD	32
1281	1296	1310	1311	1297	4	8	QUAD	32
1282	1297	1311	1312	1298	4	8	QUAD	32
1283	1298	1312	1313	1299	4	9	QUAD	32
1284	1299	1313	1314	1300	4	9	QUAD	32
1285	1300	1314	1315	1301	4	10	QUAD	32
1286	1301	1315	1316	1302	4	10	QUAD	32
1287	1302	1316	1317	1303	4	11	QUAD	32
1288	1303	1317	1318	1304	4	11	QUAD	32
1289	1305	1338	1339	1306	4	5	QUAD	70
1290	1306	1339	1340	1307	4	5	QUAD	70
1291	1307	1340	1341	1308	4	6	QUAD	70
1292	1308	1341	1342	1309	4	7	QUAD	70
1293	1309	1342	1343	1310	4	7	QUAD	70
1294	1310	1343	1344	1311	4	8	QUAD	70
1295	1311	1344	1345	1312	4	8	QUAD	70
1296	1312	1345	1346	1313	4	9	QUAD	70
1297	1313	1346	1347	1314	4	9	QUAD	70
1298	1314	1347	1348	1315	4	10	QUAD	70
1299	1315	1348	1349	1316	4	10	QUAD	70
1300	1316	1349	1350	1317	4	11	QUAD	70
1301	1317	1350	1351	1318	4	11	QUAD	70

E	I	J	K	L	M	Incr	T	BW
1302	1319	1352	1353	1320	6	1	QUAD	70
1303	1320	1353	1354	1321	6	1	QUAD	70
1304	1321	1354	1355	1322	6	1	QUAD	70
1305	1322	1355	1356	1323	6	1	QUAD	70
1306	1323	1356	1357	1324	6	1	QUAD	70
1307	1324	1357	1358	1325	6	1	QUAD	70
1308	1325	1358	1359	1326	6	1	QUAD	70
1309	1326	1359	1360	1327	6	1	QUAD	70
1310	1327	1360	1361	1328	5	1	QUAD	70
1311	1328	1361	1362	1329	5	1	QUAD	70
1312	1329	1362	1363	1330	5	1	QUAD	70
1313	1330	1363	1364	1331	5	1	QUAD	70
1314	1331	1364	1365	1332	5	1	QUAD	70
1315	1332	1365	1366	1333	3	1	QUAD	70
1316	1333	1366	1367	1334	3	1	QUAD	70
1317	1334	1367	1368	1335	5	1	QUAD	70
1318	1335	1368	1369	1336	1	1	QUAD	70
1319	1336	1369	1370	1337	1	1	QUAD	70
1320	1338	1371	1372	1339	4	5	QUAD	70
1321	1339	1372	1373	0	4	5	TRI.	70
1322	1339	1373	1374	1340	4	5	QUAD	72
1323	1340	1374	1375	1341	4	6	QUAD	72
1324	1341	1375	1376	1342	4	7	QUAD	72
1325	1342	1376	1377	1343	4	7	QUAD	72
1326	1343	1377	1378	1344	4	8	QUAD	72
1327	1344	1378	1379	1345	4	8	QUAD	72
1328	1345	1379	1380	1346	4	9	QUAD	72
1329	1346	1380	1381	1347	4	9	QUAD	72
1330	1347	1381	1382	1348	4	10	QUAD	72
1331	1348	1382	1383	1349	4	10	QUAD	72
1332	1349	1383	1384	1350	4	11	QUAD	72
1333	1350	1384	1385	1351	4	11	QUAD	72
1334	1352	1401	1402	1353	6	1	QUAD	102
1335	1353	1402	1403	1354	6	1	QUAD	102
1336	1354	1403	1404	1355	6	1	QUAD	102
1337	1355	1404	1405	1356	6	1	QUAD	102
1338	1356	1405	1406	1357	6	1	QUAD	102
1339	1357	1406	1407	1358	6	1	QUAD	102
1340	1358	1407	1408	1359	6	1	QUAD	102
1341	1359	1408	1409	1360	6	1	QUAD	102
1342	1360	1409	1410	1361	5	1	QUAD	102
1343	1361	1410	1411	1362	5	1	QUAD	102
1344	1362	1411	1412	1363	5	1	QUAD	102
1345	1363	1412	1413	1364	5	1	QUAD	102
1346	1364	1413	1414	1365	5	1	QUAD	102
1347	1365	1414	1415	1366	3	1	QUAD	102
1348	1366	1415	1416	1367	3	1	QUAD	102
1349	1367	1416	1417	1368	5	1	QUAD	102
1350	1368	1417	1418	1369	1	1	QUAD	102
1351	1369	1418	1419	1370	1	1	QUAD	102
1352	1371	1386	1387	1372	4	5	QUAD	34
1353	1372	1387	1388	1373	4	5	QUAD	34
1354	1373	1388	1389	1374	4	5	QUAD	34
1355	1374	1389	1390	1375	4	6	QUAD	34
1356	1375	1390	1391	1376	4	7	QUAD	34
1357	1376	1391	1392	1377	4	7	QUAD	34
1358	1377	1392	1393	1378	4	8	QUAD	34
1359	1378	1393	1394	1379	4	8	QUAD	34
1360	1379	1394	1395	1380	4	9	QUAD	34
1361	1380	1395	1396	1381	4	9	QUAD	34
1362	1381	1396	1397	1382	4	10	QUAD	34
1363	1382	1397	1398	1383	4	10	QUAD	34
1364	1383	1398	1399	1384	4	11	QUAD	34
1365	1384	1399	1400	1385	4	11	QUAD	34
1366	1386	1434	1420	1387	4	5	QUAD	98
1367	1387	1420	1421	1388	4	5	QUAD	70
1368	1388	1421	1422	1389	4	5	QUAD	70
1369	1389	1422	1423	1390	4	6	QUAD	70
1370	1390	1423	1424	1391	4	7	QUAD	70
1371	1391	1424	1425	1392	4	7	QUAD	70
1372	1392	1425	1426	1393	4	8	QUAD	70

E	I	J	K	L	M	Incr	T	BW
1373	1393	1426	1427	1394	4	8	QUAD	70
1374	1394	1427	1428	1395	4	9	QUAD	70
1375	1395	1428	1429	1396	4	9	QUAD	70
1376	1396	1429	1430	1397	4	10	QUAD	70
1377	1397	1430	1431	1398	4	10	QUAD	70
1378	1398	1431	1432	1399	4	11	QUAD	70
1379	1399	1432	1433	1400	4	11	QUAD	70
1380	1401	1451	1452	1402	6	1	QUAD	104
1381	1402	1452	1453	1403	6	1	QUAD	104
1382	1403	1453	1454	1404	6	1	QUAD	104
1383	1404	1454	1455	1405	6	1	QUAD	104
1384	1405	1455	1456	1406	6	1	QUAD	104
1385	1406	1456	1457	1407	6	1	QUAD	104
1386	1407	1457	1458	1408	6	1	QUAD	104
1387	1408	1458	1459	1409	6	1	QUAD	104
1388	1409	1459	1460	1410	5	1	QUAD	104
1389	1410	1460	1461	1411	5	1	QUAD	104
1390	1411	1461	1462	1412	5	1	QUAD	104
1391	1412	1462	1463	1413	5	1	QUAD	104
1392	1413	1463	1464	1414	5	1	QUAD	104
1393	1414	1464	1465	1415	3	1	QUAD	104
1394	1415	1465	1466	1416	3	1	QUAD	104
1395	1416	1466	1467	1417	5	1	QUAD	104
1396	1417	1467	1468	1418	1	1	QUAD	104
1397	1418	1468	1469	1419	1	1	QUAD	104
1398	1420	1434	1436	0	4	5	TRI.	34
1399	1420	1436	1437	1421	4	5	QUAD	36
1400	1421	1437	1438	1422	4	5	QUAD	36
1401	1422	1438	1439	1423	4	6	QUAD	36
1402	1423	1439	1440	1424	4	7	QUAD	36
1403	1424	1440	1441	1425	4	7	QUAD	36
1404	1425	1441	1442	1426	4	8	QUAD	36
1405	1426	1442	1443	1427	4	8	QUAD	36
1406	1427	1443	1444	1428	4	9	QUAD	36
1407	1428	1444	1445	1429	4	9	QUAD	36
1408	1429	1445	1446	1430	4	10	QUAD	36
1409	1430	1446	1447	1431	4	10	QUAD	36
1410	1431	1447	1448	1432	4	11	QUAD	36
1411	1432	1448	1449	1433	4	11	QUAD	36
1412	1434	1435	1436	0	2	4	TRI.	6
1413	1435	1450	1470	1471	2	4	QUAD	74
1414	1436	1435	1471	1472	2	4	QUAD	76
1415	1436	1472	1473	1437	4	5	QUAD	76
1416	1437	1473	1474	1438	4	5	QUAD	76
1417	1438	1474	1475	1439	4	6	QUAD	76
1418	1439	1475	1476	1440	4	7	QUAD	76
1419	1440	1476	1477	1441	4	7	QUAD	76
1420	1441	1477	1478	1442	4	8	QUAD	76
1421	1442	1478	1479	1443	4	8	QUAD	76
1422	1443	1479	1480	1444	4	9	QUAD	76
1423	1444	1480	1481	1445	4	9	QUAD	76
1424	1445	1481	1482	1446	4	10	QUAD	76
1425	1446	1482	1483	1447	4	10	QUAD	76
1426	1447	1483	1484	1448	4	11	QUAD	76
1427	1448	1484	1485	1449	4	11	QUAD	76
1428	1450	1486	1470	0	2	4	TRI.	74
1429	1451	1487	1488	1452	6	1	QUAD	76
1430	1452	1488	1489	1453	6	1	QUAD	76
1431	1453	1489	1490	1454	6	1	QUAD	76
1432	1454	1490	1491	1455	6	1	QUAD	76
1433	1455	1491	1492	1456	6	1	QUAD	76
1434	1456	1492	1493	1457	6	1	QUAD	76
1435	1457	1493	1494	1458	6	1	QUAD	76
1436	1458	1494	1495	1459	6	1	QUAD	76
1437	1459	1495	1496	1460	5	1	QUAD	76
1438	1460	1496	1497	1461	5	1	QUAD	76
1439	1461	1497	1498	1462	5	1	QUAD	76
1440	1462	1498	1499	1463	5	1	QUAD	76
1441	1463	1499	1500	1464	5	1	QUAD	76
1442	1464	1500	1501	1465	3	1	QUAD	76
1443	1465	1501	1502	1466	3	1	QUAD	76

E	I	J	K	L	M	Incr	T	BW
1444	1466	1502	1503	1467	5	1	QUAD	76
1445	1467	1503	1504	1468	1	1	QUAD	76
1446	1468	1504	1505	1469	1	1	QUAD	76
1447	1470	1486	1506	1507	2	4	QUAD	76
1448	1470	1507	1508	1471	2	4	QUAD	78
1449	1471	1508	1509	1472	2	4	QUAD	78
1450	1472	1509	1510	1473	4	5	QUAD	78
1451	1473	1510	1511	1474	4	5	QUAD	78
1452	1474	1511	1512	1475	4	6	QUAD	78
1453	1475	1512	1513	1476	4	7	QUAD	78
1454	1476	1513	1514	1477	4	7	QUAD	78
1455	1477	1514	1515	1478	4	8	QUAD	78
1456	1478	1515	1516	1479	4	8	QUAD	78
1457	1479	1516	1517	1480	4	9	QUAD	78
1458	1480	1517	1518	1481	4	9	QUAD	78
1459	1481	1518	1519	1482	4	10	QUAD	78
1460	1482	1519	1520	1483	4	10	QUAD	78
1461	1483	1520	1521	1484	4	11	QUAD	78
1462	1484	1521	1522	1485	4	11	QUAD	78
1463	1486	1523	1506	0	2	3	TRI.	76
1464	1487	1524	1525	1488	6	1	QUAD	78
1465	1488	1525	1526	1489	6	1	QUAD	78
1466	1489	1526	1527	1490	6	1	QUAD	78
1467	1490	1527	1528	1491	6	1	QUAD	78
1468	1491	1528	1529	1492	6	1	QUAD	78
1469	1492	1529	1530	1493	6	1	QUAD	78
1470	1493	1530	1531	1494	6	1	QUAD	78
1471	1494	1531	1532	1495	6	1	QUAD	78
1472	1495	1532	1533	1496	5	1	QUAD	78
1473	1496	1533	1534	1497	5	1	QUAD	78
1474	1497	1534	1535	1498	5	1	QUAD	78
1475	1498	1535	1536	1499	5	1	QUAD	78
1476	1499	1536	1537	1500	5	1	QUAD	78
1477	1500	1537	1538	1501	3	1	QUAD	78
1478	1501	1538	1539	1502	3	1	QUAD	78
1479	1502	1539	1540	1503	5	1	QUAD	78
1480	1503	1540	1541	1504	1	1	QUAD	78
1481	1504	1541	1542	1505	1	1	QUAD	78
1482	1506	1523	1543	1544	2	3	QUAD	78
1483	1506	1544	1545	1507	2	4	QUAD	80
1484	1507	1545	1546	1508	2	4	QUAD	80
1485	1508	1546	1547	1509	2	4	QUAD	80
1486	1509	1547	1548	1510	4	5	QUAD	80
1487	1510	1548	1549	1511	4	5	QUAD	80
1488	1511	1549	1550	1512	4	6	QUAD	80
1489	1512	1550	1551	1513	4	7	QUAD	80
1490	1513	1551	1552	1514	4	7	QUAD	80
1491	1514	1552	1553	1515	4	8	QUAD	80
1492	1515	1553	1554	1516	4	8	QUAD	80
1493	1516	1554	1555	1517	4	9	QUAD	80
1494	1517	1555	1556	1518	4	9	QUAD	80
1495	1518	1556	1557	1519	4	10	QUAD	80
1496	1519	1557	1558	1520	4	10	QUAD	80
1497	1520	1558	1559	1521	4	11	QUAD	80
1498	1521	1559	1560	1522	4	11	QUAD	80
1499	1523	1561	1543	0	2	3	TRI.	78
1500	1524	1563	1564	1525	6	1	QUAD	82
1501	1525	1564	1565	1526	6	1	QUAD	82
1502	1526	1565	1566	1527	6	1	QUAD	82
1503	1527	1566	1567	1528	6	1	QUAD	82
1504	1528	1567	1568	1529	6	1	QUAD	82
1505	1529	1568	1569	1530	6	1	QUAD	82
1506	1530	1569	1570	1531	6	1	QUAD	82
1507	1531	1570	1571	1532	6	1	QUAD	82
1508	1532	1571	1572	1533	5	1	QUAD	82
1509	1533	1572	1573	1534	5	1	QUAD	82
1510	1534	1573	1574	1535	5	1	QUAD	82
1511	1535	1574	1575	1536	5	1	QUAD	82
1512	1536	1575	1576	1537	5	1	QUAD	82
1513	1537	1576	1577	1538	3	1	QUAD	82
1514	1538	1577	1578	1539	3	1	QUAD	82

E	I	J	K	L	M	Incr	T	BW
1515	1539	1578	1579	1540	5	1	QUAD	82
1516	1540	1579	1580	1541	1	1	QUAD	82
1517	1541	1580	1581	1542	1	1	QUAD	82
1518	1543	1561	1582	1583	2	3	QUAD	82
1519	1543	1583	1584	1544	2	3	QUAD	84
1520	1544	1584	1585	1545	2	4	QUAD	84
1521	1545	1585	1586	1546	2	4	QUAD	84
1522	1546	1586	1587	1547	2	4	QUAD	84
1523	1547	1587	1588	1548	4	5	QUAD	84
1524	1548	1588	1589	1549	4	5	QUAD	84
1525	1549	1589	1590	1550	4	6	QUAD	84
1526	1550	1590	1591	1551	4	7	QUAD	84
1527	1551	1591	1592	1552	4	7	QUAD	84
1528	1552	1592	1593	1553	4	8	QUAD	84
1529	1553	1593	1594	1554	4	8	QUAD	84
1530	1554	1594	1595	1555	4	9	QUAD	84
1531	1555	1595	1596	1556	4	9	QUAD	84
1532	1556	1596	1597	1557	4	10	QUAD	84
1533	1557	1597	1598	1558	4	10	QUAD	84
1534	1558	1598	1599	1559	4	11	QUAD	84
1535	1559	1599	1600	1560	4	11	QUAD	84
1536	1561	1562	1582	0	2	3	TRI.	44
1537	1562	1622	1582	0	2	3	TRI.	122
1538	1562	1601	1622	0	2	2	TRI.	122
1539	1563	1602	1603	1564	6	1	QUAD	82
1540	1564	1603	1604	1565	6	1	QUAD	82
1541	1565	1604	1605	1566	6	1	QUAD	82
1542	1566	1605	1606	1567	6	1	QUAD	82
1543	1567	1606	1607	1568	6	1	QUAD	82
1544	1568	1607	1608	1569	6	1	QUAD	82
1545	1569	1608	1609	1570	6	1	QUAD	82
1546	1570	1609	1610	1571	6	1	QUAD	82
1547	1571	1610	1611	1572	5	1	QUAD	82
1548	1572	1611	1612	1573	5	1	QUAD	82
1549	1573	1612	1613	1574	5	1	QUAD	82
1550	1574	1613	1614	1575	5	1	QUAD	82
1551	1575	1614	1615	1576	5	1	QUAD	82
1552	1576	1615	1616	1577	3	1	QUAD	82
1553	1577	1616	1617	1578	3	1	QUAD	82
1554	1578	1617	1618	1579	3	1	QUAD	82
1555	1579	1618	1619	1580	3	1	QUAD	82
1556	1580	1619	1620	1581	3	1	QUAD	82
1557	1582	1622	1623	0	2	3	TRI.	84
1558	1582	1623	1624	1583	2	3	QUAD	86
1559	1583	1624	1625	1584	2	3	QUAD	86
1560	1584	1625	1626	1585	2	4	QUAD	86
1561	1585	1626	1627	1586	2	4	QUAD	86
1562	1586	1627	1628	1587	2	4	QUAD	86
1563	1587	1628	1629	1588	4	5	QUAD	86
1564	1588	1629	1630	1589	4	5	QUAD	86
1565	1589	1630	1631	1590	4	6	QUAD	86
1566	1590	1631	1632	1591	4	7	QUAD	86
1567	1591	1632	1633	1592	4	7	QUAD	86
1568	1592	1633	1634	1593	4	8	QUAD	86
1569	1593	1634	1635	1594	4	8	QUAD	86
1570	1594	1635	1636	1595	4	9	QUAD	86
1571	1595	1636	1637	1596	4	9	QUAD	86
1572	1596	1637	1638	1597	4	10	QUAD	86
1573	1597	1638	1639	1598	4	10	QUAD	86
1574	1598	1639	1640	1599	4	11	QUAD	86
1575	1599	1640	1641	1600	4	11	QUAD	86
1576	1622	1601	1621	0	2	2	TRI.	44
1577	1620	1621	1601	0	2	2	TRI.	42
1578	1602	1642	1643	1603	6	1	QUAD	84
1579	1603	1643	1644	1604	6	1	QUAD	84
1580	1604	1644	1645	1605	6	1	QUAD	84
1581	1605	1645	1646	1606	6	1	QUAD	84
1582	1606	1646	1647	1607	6	1	QUAD	84
1583	1607	1647	1648	1608	6	1	QUAD	84
1584	1608	1648	1649	1609	6	1	QUAD	84
1585	1609	1649	1650	1610	6	1	QUAD	84

E	I	J	K	L	M	Incr	T	BW
1586	1610	1650	1651	1611	5	1	QUAD	84
1587	1611	1651	1652	1612	5	1	QUAD	84
1588	1612	1652	1653	1613	5	1	QUAD	84
1589	1613	1653	1654	1614	5	1	QUAD	84
1590	1614	1654	1655	1615	5	1	QUAD	84
1591	1615	1655	1656	1616	3	1	QUAD	84
1592	1616	1656	1657	1617	3	1	QUAD	84
1593	1617	1657	1658	1618	3	1	QUAD	84
1594	1618	1658	1659	1619	3	1	QUAD	84
1595	1619	1659	1660	1620	3	1	QUAD	84
1596	1620	1660	1661	1621	2	2	QUAD	84
1597	1621	1661	1662	1622	2	2	QUAD	84
1598	1622	1662	1663	1623	2	3	QUAD	84
1599	1623	1663	1664	1624	2	3	QUAD	84
1600	1624	1664	1665	1625	2	3	QUAD	84
1601	1625	1665	1666	1626	2	4	QUAD	84
1602	1626	1666	1667	1627	4	4	QUAD	84
1603	1627	1667	1668	1628	4	4	QUAD	84
1604	1628	1668	1669	1629	4	5	QUAD	84
1605	1629	1669	1670	1630	4	5	QUAD	84
1606	1630	1670	1671	1631	4	6	QUAD	84
1607	1631	1671	1672	1632	4	7	QUAD	84
1608	1632	1672	1673	1633	4	7	QUAD	84
1609	1633	1673	1674	1634	4	8	QUAD	84
1610	1634	1674	1675	1635	4	8	QUAD	84
1611	1635	1675	1676	1636	4	9	QUAD	84
1612	1636	1676	1677	1637	4	9	QUAD	84
1613	1637	1677	1678	1638	4	10	QUAD	84
1614	1638	1678	1679	1639	4	10	QUAD	84
1615	1639	1679	1680	1640	4	11	QUAD	84
1616	1640	1680	1681	1641	4	11	QUAD	84
1617	1642	1682	1683	1643	6	1	QUAD	84
1618	1643	1683	1684	1644	6	1	QUAD	84
1619	1644	1684	1685	1645	6	1	QUAD	84
1620	1645	1685	1686	1646	6	1	QUAD	84
1621	1646	1686	1687	1647	6	1	QUAD	84
1622	1647	1687	1688	1648	6	1	QUAD	84
1623	1648	1688	1689	1649	6	1	QUAD	84
1624	1649	1689	1690	1650	6	1	QUAD	84
1625	1650	1690	1691	1651	5	1	QUAD	84
1626	1651	1691	1692	1652	5	1	QUAD	84
1627	1652	1692	1693	1653	5	1	QUAD	84
1628	1653	1693	1694	1654	5	1	QUAD	84
1629	1654	1694	1695	1655	5	1	QUAD	84
1630	1655	1695	1696	1656	3	1	QUAD	84
1631	1656	1696	1697	1657	3	1	QUAD	84
1632	1657	1697	1698	1658	5	1	QUAD	84
1633	1658	1698	1699	1659	1	1	QUAD	84
1634	1659	1699	1700	1660	1	1	QUAD	84
1635	1660	1700	1701	1661	2	2	QUAD	84
1636	1661	1701	1702	1662	2	2	QUAD	84
1637	1662	1702	1703	1663	2	3	QUAD	84
1638	1663	1703	1704	1664	2	3	QUAD	84
1639	1664	1704	1705	1665	4	3	QUAD	84
1640	1665	1705	1706	1666	4	4	QUAD	84
1641	1666	1706	1707	1667	4	4	QUAD	84
1642	1667	1707	1708	1668	4	4	QUAD	84
1643	1668	1708	1709	1669	4	5	QUAD	84
1644	1669	1709	1710	1670	4	5	QUAD	84
1645	1670	1710	1711	1671	4	6	QUAD	84
1646	1671	1711	1712	1672	4	7	QUAD	84
1647	1672	1712	1713	1673	4	7	QUAD	84
1648	1673	1713	1714	1674	4	8	QUAD	84
1649	1674	1714	1715	1675	4	8	QUAD	84
1650	1675	1715	1716	1676	4	9	QUAD	84
1651	1676	1716	1717	1677	4	9	QUAD	84
1652	1677	1717	1718	1678	4	10	QUAD	84
1653	1678	1718	1719	1679	4	10	QUAD	84
1654	1679	1719	1720	1680	4	11	QUAD	84
1655	1680	1720	1721	1681	4	11	QUAD	84
1656	1682	1722	1723	1683	6	1	QUAD	84

E	I	J	K	L	M	Incr	T	BW
1657	1683	1723	1724	1684	6	1	QUAD	84
1658	1684	1724	1725	1685	6	1	QUAD	84
1659	1685	1725	1726	1686	6	1	QUAD	84
1660	1686	1726	1727	1687	6	1	QUAD	84
1661	1687	1727	1728	1688	6	1	QUAD	84
1662	1688	1728	1729	1689	6	1	QUAD	84
1663	1689	1729	1730	1690	6	1	QUAD	84
1664	1690	1730	1731	1691	5	1	QUAD	84
1665	1691	1731	1732	1692	5	1	QUAD	84
1666	1692	1732	1733	1693	5	1	QUAD	84
1667	1693	1733	1734	1694	5	1	QUAD	84
1668	1694	1734	1735	1695	5	1	QUAD	84
1669	1695	1735	1736	1696	3	1	QUAD	84
1670	1696	1736	1737	1697	3	1	QUAD	84
1671	1697	1737	1738	1698	5	1	QUAD	84
1672	1698	1738	1739	1699	1	1	QUAD	84
1673	1699	1739	1740	1700	1	1	QUAD	84
1674	1700	1740	1741	1701	2	2	QUAD	84
1675	1701	1741	1742	1702	4	2	QUAD	84
1676	1702	1742	1743	1703	4	3	QUAD	84
1677	1703	1743	1744	1704	4	3	QUAD	84
1678	1704	1744	1745	1705	4	3	QUAD	84
1679	1705	1745	1746	1706	4	4	QUAD	84
1680	1706	1746	1747	1707	4	4	QUAD	84
1681	1707	1747	1748	1708	4	4	QUAD	84
1682	1708	1748	1749	1709	4	5	QUAD	84
1683	1709	1749	1750	1710	4	5	QUAD	84
1684	1710	1750	1751	1711	4	6	QUAD	84
1685	1711	1751	1752	1712	4	7	QUAD	84
1686	1712	1752	1753	1713	4	7	QUAD	84
1687	1713	1753	1754	1714	4	8	QUAD	84
1688	1714	1754	1755	1715	4	8	QUAD	84
1689	1715	1755	1756	1716	4	9	QUAD	84
1690	1716	1756	1757	1717	4	9	QUAD	84
1691	1717	1757	1758	1718	4	10	QUAD	84
1692	1718	1758	1759	1719	4	10	QUAD	84
1693	1719	1759	1760	1720	4	11	QUAD	84
1694	1720	1760	1761	1721	4	11	QUAD	84
1695	1722	1762	1763	1723	6	1	QUAD	84
1696	1723	1763	1764	1724	6	1	QUAD	84
1697	1724	1764	1765	1725	6	1	QUAD	84
1698	1725	1765	1766	1726	6	1	QUAD	84
1699	1726	1766	1767	1727	6	1	QUAD	84
1700	1727	1767	1768	1728	6	1	QUAD	84
1701	1728	1768	1769	1729	6	1	QUAD	84
1702	1729	1769	1770	1730	6	1	QUAD	84
1703	1730	1770	1771	1731	5	1	QUAD	84
1704	1731	1771	1772	1732	5	1	QUAD	84
1705	1732	1772	1773	1733	5	1	QUAD	84
1706	1733	1773	1774	1734	5	1	QUAD	84
1707	1734	1774	1775	1735	5	1	QUAD	84
1708	1735	1775	1776	1736	5	1	QUAD	84
1709	1736	1776	1777	1737	5	1	QUAD	84
1710	1737	1777	1778	1738	5	1	QUAD	84
1711	1738	1778	1779	1739	1	1	QUAD	84
1712	1739	1779	1780	1740	1	1	QUAD	84
1713	1740	1780	1781	1741	1	1	QUAD	84
1714	1741	1781	1782	1742	1	1	QUAD	84
1715	1742	1782	1783	1743	4	3	QUAD	84
1716	1743	1783	1784	1744	4	3	QUAD	84
1717	1744	1784	1785	1745	4	3	QUAD	84
1718	1745	1785	1786	1746	4	4	QUAD	84
1719	1746	1786	1787	1747	4	4	QUAD	84
1720	1747	1787	1788	1748	4	4	QUAD	84
1721	1748	1788	1789	1749	4	5	QUAD	84
1722	1749	1789	1790	1750	4	5	QUAD	84
1723	1750	1790	1791	1751	4	6	QUAD	84
1724	1751	1791	1792	1752	4	7	QUAD	84
1725	1752	1792	1793	1753	4	7	QUAD	84
1726	1753	1793	1794	1754	4	8	QUAD	84
1727	1754	1794	1795	1755	4	8	QUAD	84

E	I	J	K	L	M	Incr	T	BW
1728	1755	1795	1796	1756	4	9	QUAD	84
1729	1756	1796	1797	1757	4	9	QUAD	84
1730	1757	1797	1798	1758	4	10	QUAD	84
1731	1758	1798	1799	1759	4	10	QUAD	84
1732	1759	1799	1800	1760	4	11	QUAD	84
1733	1760	1800	1801	1761	4	11	QUAD	84
1734	1762	1802	1803	1763	6	1	QUAD	84
1735	1763	1803	1804	1764	6	1	QUAD	84
1736	1764	1804	1805	1765	6	1	QUAD	84
1737	1765	1805	1806	1766	6	1	QUAD	84
1738	1766	1806	1807	1767	6	1	QUAD	84
1739	1767	1807	1808	1768	6	1	QUAD	84
1740	1768	1808	1809	1769	6	1	QUAD	84
1741	1769	1809	1810	1770	6	1	QUAD	84
1742	1770	1810	1811	1771	5	1	QUAD	84
1743	1771	1811	1812	1772	5	1	QUAD	84
1744	1772	1812	1813	1773	5	1	QUAD	84
1745	1773	1813	1814	1774	5	1	QUAD	84
1746	1774	1814	1815	1775	5	1	QUAD	84
1747	1775	1815	1816	1776	5	1	QUAD	84
1748	1776	1816	1817	1777	5	1	QUAD	84
1749	1777	1817	1818	1778	5	1	QUAD	84
1750	1778	1818	1819	1779	1	1	QUAD	84
1751	1779	1819	1820	1780	1	1	QUAD	84
1752	1780	1820	1821	1781	1	1	QUAD	84
1753	1781	1821	1822	1782	1	1	QUAD	84
1754	1782	1822	1823	1783	1	1	QUAD	84
1755	1783	1823	1824	1784	4	3	QUAD	84
1756	1784	1824	1825	1785	4	3	QUAD	84
1757	1785	1825	1826	1786	4	4	QUAD	84
1758	1786	1826	1827	1787	4	4	QUAD	84
1759	1787	1827	1828	1788	4	4	QUAD	84
1760	1788	1828	1829	1789	4	5	QUAD	84
1761	1789	1829	1830	1790	4	5	QUAD	84
1762	1790	1830	1831	1791	4	6	QUAD	84
1763	1791	1831	1832	1792	4	7	QUAD	84
1764	1792	1832	1833	1793	4	7	QUAD	84
1765	1793	1833	1834	1794	4	8	QUAD	84
1766	1794	1834	1835	1795	4	8	QUAD	84
1767	1795	1835	1836	1796	4	9	QUAD	84
1768	1796	1836	1837	1797	4	9	QUAD	84
1769	1797	1837	1838	1798	4	10	QUAD	84
1770	1798	1838	1839	1799	4	10	QUAD	84
1771	1799	1839	1840	1800	4	11	QUAD	84
1772	1800	1840	1841	1801	4	11	QUAD	84
1773	1802	1842	1843	1803	6	1	QUAD	84
1774	1803	1843	1844	1804	6	1	QUAD	84
1775	1804	1844	1845	1805	6	1	QUAD	84
1776	1805	1845	1846	1806	6	1	QUAD	84
1777	1806	1846	1847	1807	6	1	QUAD	84
1778	1807	1847	1848	1808	6	1	QUAD	84
1779	1808	1848	1849	1809	6	1	QUAD	84
1780	1809	1849	1850	1810	6	1	QUAD	84
1781	1810	1850	1851	1811	5	1	QUAD	84
1782	1811	1851	1852	1812	5	1	QUAD	84
1783	1812	1852	1853	1813	5	1	QUAD	84
1784	1813	1853	1854	1814	5	1	QUAD	84
1785	1814	1854	1855	1815	5	1	QUAD	84
1786	1815	1855	1856	1816	5	1	QUAD	84
1787	1816	1856	1857	1817	5	1	QUAD	84
1788	1817	1857	1858	1818	5	1	QUAD	84
1789	1818	1858	1859	1819	1	1	QUAD	84
1790	1819	1859	1860	1820	1	1	QUAD	84
1791	1820	1860	1861	1821	1	1	QUAD	84
1792	1821	1861	1862	1822	1	1	QUAD	84
1793	1822	1862	1863	1823	1	1	QUAD	84
1794	1823	1863	1864	1824	1	1	QUAD	84
1795	1824	1864	1865	1825	4	3	QUAD	84
1796	1825	1865	1866	1826	4	4	QUAD	84
1797	1826	1866	1867	1827	4	4	QUAD	84
1798	1827	1867	1868	1828	4	4	QUAD	84

E	I	J	K	L	M	Incr	T	BW
1799	1828	1868	1869	1829	4	5	QUAD	84
1800	1829	1869	1870	1830	4	5	QUAD	84
1801	1830	1870	1871	1831	4	6	QUAD	84
1802	1831	1871	1872	1832	4	7	QUAD	84
1803	1832	1872	1873	1833	4	7	QUAD	84
1804	1833	1873	1874	1834	4	8	QUAD	84
1805	1834	1874	1875	1835	4	8	QUAD	84
1806	1835	1875	1876	1836	4	9	QUAD	84
1807	1836	1876	1877	1837	4	9	QUAD	84
1808	1837	1877	1878	1838	4	10	QUAD	84
1809	1838	1878	1879	1839	4	10	QUAD	84
1810	1839	1879	1880	1840	4	11	QUAD	84
1811	1840	1880	1881	1841	4	11	QUAD	84
1812	1842	1882	1883	1843	6	1	QUAD	84
1813	1843	1883	1884	1844	6	1	QUAD	84
1814	1844	1884	1885	1845	6	1	QUAD	84
1815	1845	1885	1886	1846	6	1	QUAD	84
1816	1846	1886	1887	1847	6	1	QUAD	84
1817	1847	1887	1888	1848	6	1	QUAD	84
1818	1848	1888	1889	1849	6	1	QUAD	84
1819	1849	1889	1890	1850	6	1	QUAD	84
1820	1850	1890	1891	1851	5	1	QUAD	84
1821	1851	1891	1892	1852	5	1	QUAD	84
1822	1852	1892	1893	1853	5	1	QUAD	84
1823	1853	1893	1894	1854	5	1	QUAD	84
1824	1854	1894	1895	1855	5	1	QUAD	84
1825	1855	1895	1896	1856	5	1	QUAD	84
1826	1856	1896	1897	1857	5	1	QUAD	84
1827	1857	1897	1898	1858	5	1	QUAD	84
1828	1858	1898	1899	1859	1	1	QUAD	84
1829	1859	1899	1900	1860	1	1	QUAD	84
1830	1860	1900	1901	1861	1	1	QUAD	84
1831	1861	1901	1902	1862	1	1	QUAD	84
1832	1862	1902	1903	1863	1	1	QUAD	84
1833	1863	1903	1904	1864	1	1	QUAD	84
1834	1864	1904	1905	1865	1	1	QUAD	84
1835	1865	1905	1906	1866	4	4	QUAD	84
1836	1866	1906	1907	1867	4	4	QUAD	84
1837	1867	1907	1908	1868	4	4	QUAD	84
1838	1868	1908	1909	1869	4	5	QUAD	84
1839	1869	1909	1910	1870	4	5	QUAD	84
1840	1870	1910	1911	1871	4	6	QUAD	84
1841	1871	1911	1912	1872	4	7	QUAD	84
1842	1872	1912	1913	1873	4	7	QUAD	84
1843	1873	1913	1914	1874	4	8	QUAD	84
1844	1874	1914	1915	1875	4	8	QUAD	84
1845	1875	1915	1916	1876	4	9	QUAD	84
1846	1876	1916	1917	1877	4	9	QUAD	84
1847	1877	1917	1918	1878	4	10	QUAD	84
1848	1878	1918	1919	1879	4	10	QUAD	84
1849	1879	1919	1920	1880	4	11	QUAD	84
1850	1880	1920	1921	1881	4	11	QUAD	84
1851	1882	1922	1923	1883	6	1	QUAD	84
1852	1883	1923	1924	1884	6	1	QUAD	84
1853	1884	1924	1925	1885	6	1	QUAD	84
1854	1885	1925	1926	1886	6	1	QUAD	84
1855	1886	1926	1927	1887	6	1	QUAD	84
1856	1887	1927	1928	1888	6	1	QUAD	84
1857	1888	1928	1929	1889	6	1	QUAD	84
1858	1889	1929	1930	1890	6	1	QUAD	84
1859	1890	1930	1931	1891	5	1	QUAD	84
1860	1891	1931	1932	1892	5	1	QUAD	84
1861	1892	1932	1933	1893	5	1	QUAD	84
1862	1893	1933	1934	1894	5	1	QUAD	84
1863	1894	1934	1935	1895	5	1	QUAD	84
1864	1895	1935	1936	1896	5	1	QUAD	84
1865	1896	1936	1937	1897	5	1	QUAD	84
1866	1897	1937	1938	1898	5	1	QUAD	84
1867	1898	1938	1939	1899	1	1	QUAD	84
1868	1899	1939	1940	1900	1	1	QUAD	84
1869	1900	1940	1941	1901	1	1	QUAD	84

E	I	J	K	L	M	Incr	T	BW
1870	1901	1941	1942	1902	1	1	QUAD	84
1871	1902	1942	1943	1903	1	1	QUAD	84
1872	1903	1943	1944	1904	1	1	QUAD	84
1873	1904	1944	1945	1905	1	1	QUAD	84
1874	1905	1945	1946	1906	1	1	QUAD	84
1875	1906	1946	1947	1907	4	4	QUAD	84
1876	1907	1947	1948	1908	4	4	QUAD	84
1877	1908	1948	1949	1909	4	5	QUAD	84
1878	1909	1949	1950	1910	4	5	QUAD	84
1879	1910	1950	1951	1911	4	6	QUAD	84
1880	1911	1951	1952	1912	4	7	QUAD	84
1881	1912	1952	1953	1913	4	7	QUAD	84
1882	1913	1953	1954	1914	4	8	QUAD	84
1883	1914	1954	1955	1915	4	8	QUAD	84
1884	1915	1955	1956	1916	4	9	QUAD	84
1885	1916	1956	1957	1917	4	9	QUAD	84
1886	1917	1957	1958	1918	4	10	QUAD	84
1887	1918	1958	1959	1919	4	10	QUAD	84
1888	1919	1959	1960	1920	4	11	QUAD	84
1889	1920	1960	1961	1921	4	11	QUAD	84
1890	1922	1962	1963	1923	6	1	QUAD	84
1891	1923	1963	1964	1924	6	1	QUAD	84
1892	1924	1964	1965	1925	6	1	QUAD	84
1893	1925	1965	1966	1926	6	1	QUAD	84
1894	1926	1966	1967	1927	6	1	QUAD	84
1895	1927	1967	1968	1928	6	1	QUAD	84
1896	1928	1968	1969	1929	6	1	QUAD	84
1897	1929	1969	1970	1930	6	1	QUAD	84
1898	1930	1970	1971	1931	5	1	QUAD	84
1899	1931	1971	1972	1932	5	1	QUAD	84
1900	1932	1972	1973	1933	5	1	QUAD	84
1901	1933	1973	1974	1934	5	1	QUAD	84
1902	1934	1974	1975	1935	5	1	QUAD	84
1903	1935	1975	1976	1936	5	1	QUAD	84
1904	1936	1976	1977	1937	5	1	QUAD	84
1905	1937	1977	1978	1938	5	1	QUAD	84
1906	1938	1978	1979	1939	1	1	QUAD	84
1907	1939	1979	1980	1940	1	1	QUAD	84
1908	1940	1980	1981	1941	1	1	QUAD	84
1909	1941	1981	1982	1942	1	1	QUAD	84
1910	1942	1982	1983	1943	1	1	QUAD	84
1911	1943	1983	1984	1944	1	1	QUAD	84
1912	1944	1984	1985	1945	1	1	QUAD	84
1913	1945	1985	1986	1946	1	1	QUAD	84
1914	1946	1986	1987	1947	1	1	QUAD	84
1915	1947	1987	1988	1948	1	1	QUAD	84
1916	1948	1988	1989	1949	4	5	QUAD	84
1917	1949	1989	1990	1950	4	5	QUAD	84
1918	1950	1990	1991	1951	4	6	QUAD	84
1919	1951	1991	1992	1952	4	7	QUAD	84
1920	1952	1992	1993	1953	4	7	QUAD	84
1921	1953	1993	1994	1954	4	8	QUAD	84
1922	1954	1994	1995	1955	4	8	QUAD	84
1923	1955	1995	1996	1956	4	9	QUAD	84
1924	1956	1996	1997	1957	4	9	QUAD	84
1925	1957	1997	1998	1958	4	10	QUAD	84
1926	1958	1998	1999	1959	4	10	QUAD	84
1927	1959	1999	2000	1960	4	11	QUAD	84
1928	1960	2000	2001	1961	4	11	QUAD	84
1929	1962	2002	2003	1963	6	1	QUAD	84
1930	1963	2003	2004	1964	6	1	QUAD	84
1931	1964	2004	2005	1965	6	1	QUAD	84
1932	1965	2005	2006	1966	6	1	QUAD	84
1933	1966	2006	2007	1967	6	1	QUAD	84
1934	1967	2007	2008	1968	6	1	QUAD	84
1935	1968	2008	2009	1969	6	1	QUAD	84
1936	1969	2009	2010	1970	6	1	QUAD	84
1937	1970	2010	2011	1971	5	1	QUAD	84
1938	1971	2011	2012	1972	5	1	QUAD	84
1939	1972	2012	2013	1973	5	1	QUAD	84
1940	1973	2013	2014	1974	5	1	QUAD	84

E	I	J	K	L	M	Incr	T	BW
1941	1974	2014	2015	1975	5	1	QUAD	84
1942	1975	2015	2016	1976	5	1	QUAD	84
1943	1976	2016	2017	1977	5	1	QUAD	84
1944	1977	2017	2018	1978	5	1	QUAD	84
1945	1978	2018	2019	1979	1	1	QUAD	84
1946	1979	2019	2020	1980	1	1	QUAD	84
1947	1980	2020	2021	1981	1	1	QUAD	84
1948	1981	2021	2022	1982	1	1	QUAD	84
1949	1982	2022	2023	1983	1	1	QUAD	84
1950	1983	2023	2024	1984	1	1	QUAD	84
1951	1984	2024	2025	1985	1	1	QUAD	84
1952	1985	2025	2026	1986	1	1	QUAD	84
1953	1986	2026	2027	1987	1	1	QUAD	84
1954	1987	2027	2028	1988	1	1	QUAD	84
1955	1988	2028	2029	1989	1	1	QUAD	84
1956	1989	2029	2030	1990	4	5	QUAD	84
1957	1990	2030	2031	1991	4	6	QUAD	84
1958	1991	2031	2032	1992	4	7	QUAD	84
1959	1992	2032	2033	1993	4	7	QUAD	84
1960	1993	2033	2034	1994	4	8	QUAD	84
1961	1994	2034	2035	1995	4	8	QUAD	84
1962	1995	2035	2036	1996	4	9	QUAD	84
1963	1996	2036	2037	1997	4	9	QUAD	84
1964	1997	2037	2038	1998	4	10	QUAD	84
1965	1998	2038	2039	1999	4	10	QUAD	84
1966	1999	2039	2040	2000	4	11	QUAD	84
1967	2000	2040	2041	2001	4	11	QUAD	84
1968	2002	2042	2043	2003	6	1	QUAD	84
1969	2003	2043	2044	2004	6	1	QUAD	84
1970	2004	2044	2045	2005	6	1	QUAD	84
1971	2005	2045	2046	2006	6	1	QUAD	84
1972	2006	2046	2047	2007	6	1	QUAD	84
1973	2007	2047	2048	2008	6	1	QUAD	84
1974	2008	2048	2049	2009	6	1	QUAD	84
1975	2009	2049	2050	2010	6	1	QUAD	84
1976	2010	2050	2051	2011	5	1	QUAD	84
1977	2011	2051	2052	2012	5	1	QUAD	84
1978	2012	2052	2053	2013	5	1	QUAD	84
1979	2013	2053	2054	2014	5	1	QUAD	84
1980	2014	2054	2055	2015	5	1	QUAD	84
1981	2015	2055	2056	2016	5	1	QUAD	84
1982	2016	2056	2057	2017	5	1	QUAD	84
1983	2017	2057	2058	2018	5	1	QUAD	84
1984	2018	2058	2059	2019	1	1	QUAD	84
1985	2019	2059	2060	2020	1	1	QUAD	84
1986	2020	2060	2061	2021	1	1	QUAD	84
1987	2021	2061	2062	2022	1	1	QUAD	84
1988	2022	2062	2063	2023	1	1	QUAD	84
1989	2023	2063	2064	2024	1	1	QUAD	84
1990	2024	2064	2065	2025	1	1	QUAD	84
1991	2025	2065	2066	2026	1	1	QUAD	84
1992	2026	2066	2067	2027	1	1	QUAD	84
1993	2027	2067	2068	2028	1	1	QUAD	84
1994	2028	2068	2069	2029	1	1	QUAD	84
1995	2029	2069	2070	2030	1	1	QUAD	84
1996	2030	2070	2071	2031	4	6	QUAD	84
1997	2031	2071	2072	2032	4	7	QUAD	84
1998	2032	2072	2073	2033	4	7	QUAD	84
1999	2033	2073	2074	2034	4	8	QUAD	84
2000	2034	2074	2075	2035	4	8	QUAD	84
2001	2035	2075	2076	2036	4	9	QUAD	84
2002	2036	2076	2077	2037	4	9	QUAD	84
2003	2037	2077	2078	2038	4	10	QUAD	84
2004	2038	2078	2079	2039	4	10	QUAD	84
2005	2039	2079	2080	2040	4	11	QUAD	84
2006	2040	2080	2081	2041	4	11	QUAD	84
2007	2042	2082	2083	2043	6	1	QUAD	84
2008	2043	2083	2084	2044	6	1	QUAD	84
2009	2044	2084	2085	2045	6	1	QUAD	84
2010	2045	2085	2086	2046	6	1	QUAD	84
2011	2046	2086	2087	2047	6	1	QUAD	84

E	I	J	K	L	M	Incr	T	BW
2012	2047	2087	2088	2048	6	1	QUAD	84
2013	2048	2088	2089	2049	6	1	QUAD	84
2014	2049	2089	2090	2050	6	1	QUAD	84
2015	2050	2090	2091	2051	5	1	QUAD	84
2016	2051	2091	2092	2052	5	1	QUAD	84
2017	2052	2092	2093	2053	5	1	QUAD	84
2018	2053	2093	2094	2054	5	1	QUAD	84
2019	2054	2094	2095	2055	5	1	QUAD	84
2020	2055	2095	2096	2056	5	1	QUAD	84
2021	2056	2096	2097	2057	5	1	QUAD	84
2022	2057	2097	2098	2058	5	1	QUAD	84
2023	2058	2098	2099	2059	1	1	QUAD	84
2024	2059	2099	2100	2060	1	1	QUAD	84
2025	2060	2100	2101	2061	1	1	QUAD	84
2026	2061	2101	2102	2062	1	1	QUAD	84
2027	2062	2102	2103	2063	1	1	QUAD	84
2028	2063	2103	2104	2064	1	1	QUAD	84
2029	2064	2104	2105	2065	1	1	QUAD	84
2030	2065	2105	2106	2066	1	1	QUAD	84
2031	2066	2106	2107	2067	1	1	QUAD	84
2032	2067	2107	2108	2068	1	1	QUAD	84
2033	2068	2108	2109	2069	1	1	QUAD	84
2034	2069	2109	2110	2070	1	1	QUAD	84
2035	2070	2110	2111	2071	4	6	QUAD	84
2036	2071	2111	2112	2072	4	7	QUAD	84
2037	2072	2112	2113	2073	4	7	QUAD	84
2038	2073	2113	2114	2074	4	8	QUAD	84
2039	2074	2114	2115	2075	4	8	QUAD	84
2040	2075	2115	2116	2076	4	9	QUAD	84
2041	2076	2116	2117	2077	4	9	QUAD	84
2042	2077	2117	2118	2078	4	10	QUAD	84
2043	2078	2118	2119	2079	4	10	QUAD	84
2044	2079	2119	2120	2080	4	11	QUAD	84
2045	2080	2120	2121	2081	4	11	QUAD	84
2046	2082	2122	2123	2083	6	1	QUAD	84
2047	2083	2123	2124	2084	6	1	QUAD	84
2048	2084	2124	2125	2085	6	1	QUAD	84
2049	2085	2125	2126	2086	6	1	QUAD	84
2050	2086	2126	2127	2087	6	1	QUAD	84
2051	2087	2127	2128	2088	6	1	QUAD	84
2052	2088	2128	2129	2089	6	1	QUAD	84
2053	2089	2129	2130	2090	6	1	QUAD	84
2054	2090	2130	2131	2091	5	1	QUAD	84
2055	2091	2131	2132	2092	5	1	QUAD	84
2056	2092	2132	2133	2093	5	1	QUAD	84
2057	2093	2133	2134	2094	5	1	QUAD	84
2058	2094	2134	2135	2095	5	1	QUAD	84
2059	2095	2135	2136	2096	5	1	QUAD	84
2060	2096	2136	2137	2097	5	1	QUAD	84
2061	2097	2137	2138	2098	5	1	QUAD	84
2062	2098	2138	2139	2099	1	1	QUAD	84
2063	2099	2139	2140	2100	1	1	QUAD	84
2064	2100	2140	2141	2101	1	1	QUAD	84
2065	2101	2141	2142	2102	1	1	QUAD	84
2066	2102	2142	2143	2103	1	1	QUAD	84
2067	2103	2143	2144	2104	1	1	QUAD	84
2068	2104	2144	2145	2105	1	1	QUAD	84
2069	2105	2145	2146	2106	1	1	QUAD	84
2070	2106	2146	2147	2107	1	1	QUAD	84
2071	2107	2147	2148	2108	1	1	QUAD	84
2072	2108	2148	2149	2109	1	1	QUAD	84
2073	2109	2149	2150	2110	1	1	QUAD	84
2074	2110	2150	2151	2111	4	6	QUAD	84
2075	2111	2151	2152	2112	4	7	QUAD	84
2076	2112	2152	2153	2113	4	7	QUAD	84
2077	2113	2153	2154	2114	4	8	QUAD	84
2078	2114	2154	2155	2115	4	8	QUAD	84
2079	2115	2155	2156	2116	4	9	QUAD	84
2080	2116	2156	2157	2117	4	9	QUAD	84
2081	2117	2157	2158	2118	4	10	QUAD	84
2082	2118	2158	2159	2119	4	10	QUAD	84

E	I	J	K	L	M	Incr	T	BW
2083	2119	2159	2160	2120	4	11	QUAD	84
2084	2120	2160	2161	2121	4	11	QUAD	84
2085	2122	2162	2163	2123	6	1	QUAD	84
2086	2123	2163	2164	2124	6	1	QUAD	84
2087	2124	2164	2165	2125	6	1	QUAD	84
2088	2125	2165	2166	2126	6	1	QUAD	84
2089	2126	2166	2167	2127	6	1	QUAD	84
2090	2127	2167	2168	2128	6	1	QUAD	84
2091	2128	2168	2169	2129	6	1	QUAD	84
2092	2129	2169	2170	2130	6	1	QUAD	84
2093	2130	2170	2171	2131	5	1	QUAD	84
2094	2131	2171	2172	2132	5	1	QUAD	84
2095	2132	2172	2173	2133	5	1	QUAD	84
2096	2133	2173	2174	2134	5	1	QUAD	84
2097	2134	2174	2175	2135	5	1	QUAD	84
2098	2135	2175	2176	2136	5	1	QUAD	84
2099	2136	2176	2177	2137	5	1	QUAD	84
2100	2137	2177	2178	2138	5	1	QUAD	84
2101	2138	2178	2179	2139	1	1	QUAD	84
2102	2139	2179	2180	2140	1	1	QUAD	84
2103	2140	2180	2181	2141	1	1	QUAD	84
2104	2141	2181	2182	2142	1	1	QUAD	84
2105	2142	2182	2183	2143	1	1	QUAD	84
2106	2143	2183	2184	2144	1	1	QUAD	84
2107	2144	2184	2185	2145	1	1	QUAD	84
2108	2145	2185	2186	2146	1	1	QUAD	84
2109	2146	2186	2187	2147	1	1	QUAD	84
2110	2147	2187	2188	2148	1	1	QUAD	84
2111	2148	2188	2189	2149	1	1	QUAD	84
2112	2149	2189	2190	2150	1	1	QUAD	84
2113	2150	2190	2191	2151	4	6	QUAD	84
2114	2151	2191	2192	2152	4	7	QUAD	84
2115	2152	2192	2193	2153	4	7	QUAD	84
2116	2153	2193	2194	2154	4	8	QUAD	84
2117	2154	2194	2195	2155	4	8	QUAD	84
2118	2155	2195	2196	2156	4	9	QUAD	84
2119	2156	2196	2197	2157	4	9	QUAD	84
2120	2157	2197	2198	2158	4	10	QUAD	84
2121	2158	2198	2199	2159	4	10	QUAD	84
2122	2159	2199	2200	2160	4	11	QUAD	84
2123	2160	2200	2201	2161	4	11	QUAD	84
2124	2162	2202	2203	2163	6	1	QUAD	84
2125	2163	2203	2204	2164	6	1	QUAD	84
2126	2164	2204	2205	2165	6	1	QUAD	84
2127	2165	2205	2206	2166	6	1	QUAD	84
2128	2166	2206	2207	2167	6	1	QUAD	84
2129	2167	2207	2208	2168	6	1	QUAD	84
2130	2168	2208	2209	2169	6	1	QUAD	84
2131	2169	2209	2210	2170	6	1	QUAD	84
2132	2170	2210	2211	2171	5	1	QUAD	84
2133	2171	2211	2212	2172	5	1	QUAD	84
2134	2172	2212	2213	2173	5	1	QUAD	84
2135	2173	2213	2214	2174	5	1	QUAD	84
2136	2174	2214	2215	2175	5	1	QUAD	84
2137	2175	2215	2216	2176	5	1	QUAD	84
2138	2176	2216	2217	2177	5	1	QUAD	84
2139	2177	2217	2218	2178	5	1	QUAD	84
2140	2178	2218	2219	2179	1	1	QUAD	84
2141	2179	2219	2220	2180	1	1	QUAD	84
2142	2180	2220	2221	2181	1	1	QUAD	84
2143	2181	2221	2222	2182	1	1	QUAD	84
2144	2182	2222	2223	2183	1	1	QUAD	84
2145	2183	2223	2224	2184	1	1	QUAD	84
2146	2184	2224	2225	2185	1	1	QUAD	84
2147	2185	2225	2226	2186	1	1	QUAD	84
2148	2186	2226	2227	2187	1	1	QUAD	84
2149	2187	2227	2228	2188	1	1	QUAD	84
2150	2188	2228	2229	2189	1	1	QUAD	84
2151	2189	2229	2230	2190	1	1	QUAD	84
2152	2190	2230	2231	2191	4	6	QUAD	84
2153	2191	2231	2232	2192	4	7	QUAD	84

E	I	J	K	L	M	Incr	T	BW
2154	2192	2232	2233	2193	4	7	QUAD	84
2155	2193	2233	2234	2194	4	8	QUAD	84
2156	2194	2234	2235	2195	4	8	QUAD	84
2157	2195	2235	2236	2196	4	9	QUAD	84
2158	2196	2236	2237	2197	4	9	QUAD	84
2159	2197	2237	2238	2198	4	10	QUAD	84
2160	2198	2238	2239	2199	4	10	QUAD	84
2161	2199	2239	2240	2200	4	11	QUAD	84
2162	2200	2240	2241	2201	4	11	QUAD	84
2163	2202	2242	2243	2203	6	1	QUAD	84
2164	2203	2243	2244	2204	6	1	QUAD	84
2165	2204	2244	2245	2205	6	1	QUAD	84
2166	2205	2245	2246	2206	6	1	QUAD	84
2167	2206	2246	2247	2207	6	1	QUAD	84
2168	2207	2247	2248	2208	6	1	QUAD	84
2169	2208	2248	2249	2209	6	1	QUAD	84
2170	2209	2249	2250	2210	6	1	QUAD	84
2171	2210	2250	2251	2211	5	1	QUAD	84
2172	2211	2251	2252	2212	5	1	QUAD	84
2173	2212	2252	2253	2213	5	1	QUAD	84
2174	2213	2253	2254	2214	5	1	QUAD	84
2175	2214	2254	2255	2215	5	1	QUAD	84
2176	2215	2255	2256	2216	5	1	QUAD	84
2177	2216	2256	2257	2217	5	1	QUAD	84
2178	2217	2257	2258	2218	5	1	QUAD	84
2179	2218	2258	2259	2219	1	1	QUAD	84
2180	2219	2259	2260	2220	1	1	QUAD	84
2181	2220	2260	2261	2221	1	1	QUAD	84
2182	2221	2261	2262	2222	1	1	QUAD	84
2183	2222	2262	2263	2223	1	1	QUAD	84
2184	2223	2263	2264	2224	1	1	QUAD	84
2185	2224	2264	2265	2225	1	1	QUAD	84
2186	2225	2265	2266	2226	1	1	QUAD	84
2187	2226	2266	2267	2227	1	1	QUAD	84
2188	2227	2267	2268	2228	1	1	QUAD	84
2189	2228	2268	2269	2229	1	1	QUAD	84
2190	2229	2269	2270	2230	1	1	QUAD	84
2191	2230	2270	2271	2231	4	6	QUAD	84
2192	2231	2271	2272	2232	4	7	QUAD	84
2193	2232	2272	2273	2233	4	7	QUAD	84
2194	2233	2273	2274	2234	4	8	QUAD	84
2195	2234	2274	2275	2235	4	8	QUAD	84
2196	2235	2275	2276	2236	4	9	QUAD	84
2197	2236	2276	2277	2237	4	9	QUAD	84
2198	2237	2277	2278	2238	4	10	QUAD	84
2199	2238	2278	2279	2239	4	10	QUAD	84
2200	2239	2279	2280	2240	4	11	QUAD	84
2201	2240	2280	2281	2241	4	11	QUAD	84
2202	2242	2282	2283	2243	6	1	QUAD	84
2203	2243	2283	2284	2244	6	1	QUAD	84
2204	2244	2284	2285	2245	6	1	QUAD	84
2205	2245	2285	2286	2246	6	1	QUAD	84
2206	2246	2286	2287	2247	6	1	QUAD	84
2207	2247	2287	2288	2248	6	1	QUAD	84
2208	2248	2288	2289	2249	6	1	QUAD	84
2209	2249	2289	2290	2250	6	1	QUAD	84
2210	2250	2290	2291	2251	5	1	QUAD	84
2211	2251	2291	2292	2252	5	1	QUAD	84
2212	2252	2292	2293	2253	5	1	QUAD	84
2213	2253	2293	2294	2254	5	1	QUAD	84
2214	2254	2294	2295	2255	5	1	QUAD	84
2215	2255	2295	2296	2256	5	1	QUAD	84
2216	2256	2296	2297	2257	5	1	QUAD	84
2217	2257	2297	2298	2258	5	1	QUAD	84
2218	2258	2298	2299	2259	1	1	QUAD	84
2219	2259	2299	2300	2260	1	1	QUAD	84
2220	2260	2300	2301	2261	1	1	QUAD	84
2221	2261	2301	2302	2262	1	1	QUAD	84
2222	2262	2302	2303	2263	1	1	QUAD	84
2223	2263	2303	2304	2264	1	1	QUAD	84
2224	2264	2304	2305	2265	1	1	QUAD	84

E	I	J	K	L	M	Incr	T	BW
2225	2265	2305	2306	2266	1	1	QUAD	84
2226	2266	2306	2307	2267	1	1	QUAD	84
2227	2267	2307	2308	2268	1	1	QUAD	84
2228	2268	2308	2309	2269	1	1	QUAD	84
2229	2269	2309	2310	2270	1	1	QUAD	84
2230	2270	2310	2311	2271	4	6	QUAD	84
2231	2271	2311	2312	2272	4	7	QUAD	84
2232	2272	2312	2313	2273	4	7	QUAD	84
2233	2273	2313	2314	2274	4	8	QUAD	84
2234	2274	2314	2315	2275	4	8	QUAD	84
2235	2275	2315	2316	2276	4	9	QUAD	84
2236	2276	2316	2317	2277	4	9	QUAD	84
2237	2277	2317	2318	2278	4	10	QUAD	84
2238	2278	2318	2319	2279	4	10	QUAD	84
2239	2279	2319	2320	2280	4	11	QUAD	84
2240	2280	2320	2321	2281	4	11	QUAD	84
2241	2282	2322	2323	2283	6	1	QUAD	84
2242	2283	2323	2324	2284	6	1	QUAD	84
2243	2284	2324	2325	2285	6	1	QUAD	84
2244	2285	2325	2326	2286	6	1	QUAD	84
2245	2286	2326	2327	2287	6	1	QUAD	84
2246	2287	2327	2328	2288	6	1	QUAD	84
2247	2288	2328	2329	2289	6	1	QUAD	84
2248	2289	2329	2330	2290	6	1	QUAD	84
2249	2290	2330	2331	2291	5	1	QUAD	84
2250	2291	2331	2332	2292	5	1	QUAD	84
2251	2292	2332	2333	2293	5	1	QUAD	84
2252	2293	2333	2334	2294	5	1	QUAD	84
2253	2294	2334	2335	2295	5	1	QUAD	84
2254	2295	2335	2336	2296	5	1	QUAD	84
2255	2296	2336	2337	2297	5	1	QUAD	84
2256	2297	2337	2338	2298	5	1	QUAD	84
2257	2298	2338	2339	2299	1	1	QUAD	84
2258	2299	2339	2340	2300	1	1	QUAD	84
2259	2300	2340	2341	2301	1	1	QUAD	84
2260	2301	2341	2342	2302	1	1	QUAD	84
2261	2302	2342	2343	2303	1	1	QUAD	84
2262	2303	2343	2344	2304	1	1	QUAD	84
2263	2304	2344	2345	2305	1	1	QUAD	84
2264	2305	2345	2346	2306	1	1	QUAD	84
2265	2306	2346	2347	2307	1	1	QUAD	84
2266	2307	2347	2348	2308	1	1	QUAD	84
2267	2308	2348	2349	2309	1	1	QUAD	84
2268	2309	2349	2350	2310	1	1	QUAD	84
2269	2310	2350	2351	2311	4	6	QUAD	84
2270	2311	2351	2352	2312	4	7	QUAD	84
2271	2312	2352	2353	2313	4	7	QUAD	84
2272	2313	2353	2354	2314	4	8	QUAD	84
2273	2314	2354	2355	2315	4	8	QUAD	84
2274	2315	2355	2356	2316	4	9	QUAD	84
2275	2316	2356	2357	2317	4	9	QUAD	84
2276	2317	2357	2358	2318	4	10	QUAD	84
2277	2318	2358	2359	2319	4	10	QUAD	84
2278	2319	2359	2360	2320	4	11	QUAD	84
2279	2320	2360	2361	2321	4	11	QUAD	84
2280	2322	2362	2363	2323	6	1	QUAD	84
2281	2323	2363	2364	2324	6	1	QUAD	84
2282	2324	2364	2365	2325	6	1	QUAD	84
2283	2325	2365	2366	2326	6	1	QUAD	84
2284	2326	2366	2367	2327	6	1	QUAD	84
2285	2327	2367	2368	2328	6	1	QUAD	84
2286	2328	2368	2369	2329	6	1	QUAD	84
2287	2329	2369	2370	2330	6	1	QUAD	84
2288	2330	2370	2371	2331	5	1	QUAD	84
2289	2331	2371	2372	2332	5	1	QUAD	84
2290	2332	2372	2373	2333	5	1	QUAD	84
2291	2333	2373	2374	2334	5	1	QUAD	84
2292	2334	2374	2375	2335	5	1	QUAD	84
2293	2335	2375	2376	2336	5	1	QUAD	84
2294	2336	2376	2377	2337	5	1	QUAD	84
2295	2337	2377	2378	2338	5	1	QUAD	84

E	I	J	K	L	M	Incr	T	BW
2296	2338	2378	2379	2339	1	1	QUAD	84
2297	2339	2379	2380	2340	1	1	QUAD	84
2298	2340	2380	2381	2341	1	1	QUAD	84
2299	2341	2381	2382	2342	1	1	QUAD	84
2300	2342	2382	2383	2343	1	1	QUAD	84
2301	2343	2383	2384	2344	1	1	QUAD	84
2302	2344	2384	2385	2345	1	1	QUAD	84
2303	2345	2385	2386	2346	1	1	QUAD	84
2304	2346	2386	2387	2347	1	1	QUAD	84
2305	2347	2387	2388	2348	1	1	QUAD	84
2306	2348	2388	2389	2349	1	1	QUAD	84
2307	2349	2389	2390	2350	1	1	QUAD	84
2308	2350	2390	2391	2351	4	6	QUAD	84
2309	2351	2391	2392	2352	4	7	QUAD	84
2310	2352	2392	2393	2353	4	7	QUAD	84
2311	2353	2393	2394	2354	4	8	QUAD	84
2312	2354	2394	2395	2355	4	8	QUAD	84
2313	2355	2395	2396	2356	4	9	QUAD	84
2314	2356	2396	2397	2357	4	9	QUAD	84
2315	2357	2397	2398	2358	4	10	QUAD	84
2316	2358	2398	2399	2359	4	10	QUAD	84
2317	2359	2399	2400	2360	4	11	QUAD	84
2318	2360	2400	2401	2361	4	11	QUAD	84
2319	2362	2402	2403	2363	6	1	QUAD	84
2320	2363	2403	2404	2364	6	1	QUAD	84
2321	2364	2404	2405	2365	6	1	QUAD	84
2322	2365	2405	2406	2366	6	1	QUAD	84
2323	2366	2406	2407	2367	6	1	QUAD	84
2324	2367	2407	2408	2368	6	1	QUAD	84
2325	2368	2408	2409	2369	6	1	QUAD	84
2326	2369	2409	2410	2370	6	1	QUAD	84
2327	2370	2410	2411	2371	5	1	QUAD	84
2328	2371	2411	2412	2372	5	1	QUAD	84
2329	2372	2412	2413	2373	5	1	QUAD	84
2330	2373	2413	2414	2374	5	1	QUAD	84
2331	2374	2414	2415	2375	5	1	QUAD	84
2332	2375	2415	2416	2376	5	1	QUAD	84
2333	2376	2416	2417	2377	5	1	QUAD	84
2334	2377	2417	2418	2378	5	1	QUAD	84
2335	2378	2418	2419	2379	1	1	QUAD	84
2336	2379	2419	2420	2380	1	1	QUAD	84
2337	2380	2420	2421	2381	1	1	QUAD	84
2338	2381	2421	2422	2382	1	1	QUAD	84
2339	2382	2422	2423	2383	1	1	QUAD	84
2340	2383	2423	2424	2384	1	1	QUAD	84
2341	2384	2424	2425	2385	1	1	QUAD	84
2342	2385	2425	2426	2386	1	1	QUAD	84
2343	2386	2426	2427	2387	1	1	QUAD	84
2344	2387	2427	2428	2388	1	1	QUAD	84
2345	2388	2428	2429	2389	1	1	QUAD	84
2346	2389	2429	2430	2390	1	1	QUAD	84
2347	2390	2430	2431	2391	4	6	QUAD	84
2348	2391	2431	2432	2392	4	7	QUAD	84
2349	2392	2432	2433	2393	4	7	QUAD	84
2350	2393	2433	2434	2394	4	8	QUAD	84
2351	2394	2434	2435	2395	4	8	QUAD	84
2352	2395	2435	2436	2396	4	9	QUAD	84
2353	2396	2436	2437	2397	4	9	QUAD	84
2354	2397	2437	2438	2398	4	10	QUAD	84
2355	2398	2438	2439	2399	4	10	QUAD	84
2356	2399	2439	2440	2400	4	11	QUAD	84
2357	2400	2440	2441	2401	4	11	QUAD	84
2358	2402	2442	2443	2403	6	1	QUAD	84
2359	2403	2443	2444	2404	6	1	QUAD	84
2360	2404	2444	2445	2405	6	1	QUAD	84
2361	2405	2445	2446	2406	6	1	QUAD	84
2362	2406	2446	2447	2407	6	1	QUAD	84
2363	2407	2447	2448	2408	6	1	QUAD	84
2364	2408	2448	2449	2409	6	1	QUAD	84
2365	2409	2449	2450	2410	6	1	QUAD	84
2366	2410	2450	2451	2411	5	1	QUAD	84

E	I	J	K	L	M	Incr	T	BW
2367	2411	2451	2452	2412	5	1	QUAD	84
2368	2412	2452	2453	2413	5	1	QUAD	84
2369	2413	2453	2454	2414	5	1	QUAD	84
2370	2414	2454	2455	2415	5	1	QUAD	84
2371	2415	2455	2456	2416	5	1	QUAD	84
2372	2416	2456	2457	2417	5	1	QUAD	84
2373	2417	2457	2458	2418	5	1	QUAD	84
2374	2418	2458	2459	2419	1	1	QUAD	84
2375	2419	2459	2460	2420	1	1	QUAD	84
2376	2420	2460	2461	2421	1	1	QUAD	84
2377	2421	2461	2462	2422	1	1	QUAD	84
2378	2422	2462	2463	2423	1	1	QUAD	84
2379	2423	2463	2464	2424	1	1	QUAD	84
2380	2424	2464	2465	2425	1	1	QUAD	84
2381	2425	2465	2466	2426	1	1	QUAD	84
2382	2426	2466	2467	2427	1	1	QUAD	84
2383	2427	2467	2468	2428	1	1	QUAD	84
2384	2428	2468	2469	2429	1	1	QUAD	84
2385	2429	2469	2470	2430	1	1	QUAD	84
2386	2430	2470	2471	2431	4	6	QUAD	84
2387	2431	2471	2472	2432	4	7	QUAD	84
2388	2432	2472	2473	2433	4	7	QUAD	84
2389	2433	2473	2474	2434	4	8	QUAD	84
2390	2434	2474	2475	2435	4	8	QUAD	84
2391	2435	2475	2476	2436	4	9	QUAD	84
2392	2436	2476	2477	2437	4	9	QUAD	84
2393	2437	2477	2478	2438	4	10	QUAD	84
2394	2438	2478	2479	2439	4	10	QUAD	84
2395	2439	2479	2480	2440	4	11	QUAD	84
2396	2440	2480	2481	2441	4	11	QUAD	84

A1.4 NODAL COORDINATES

X, Y = X and Y coordinates of node N (in)

N	X	Y
1	-622.1	-386.9
2	-622.1	-368.9
3	-622.1	-350.9
4	-622.1	-332.9
5	-622.1	-314.9
6	-622.1	-296.9
7	-622.1	-278.9
8	-622.1	-260.9
9	-622.1	-242.9
10	-622.1	-224.9
11	-622.1	-206.9
12	-622.1	-188.9
13	-622.1	-170.9
14	-622.1	-152.9
15	-622.1	-134.9
16	-622.1	-116.9
17	-622.1	-98.91
18	-622.1	-83.91
19	-622.1	-71.91
20	-622.1	-55.9
21	-622.1	-41.92
22	-622.1	-27.94
23	-622.1	-13.96
24	-622.1	0.0
25	-622.1	14.19
26	-622.1	23.69
27	-622.1	29.69
28	-622.1	43.75
29	-622.1	54.12
30	-622.1	66.12
31	-622.1	78.12
32	-622.1	90.12
33	-622.1	102.1
34	-622.1	114.1
35	-622.1	126.1
36	-622.1	138.1
37	-622.1	150.1
38	-622.1	162.1
39	-622.1	180.1
40	-622.1	198.1
41	-598.1	-386.9
42	-598.1	-368.9
43	-598.1	-350.9
44	-598.1	-332.9
45	-598.1	-314.9
46	-598.1	-296.9
47	-598.1	-278.9
48	-598.1	-260.9
49	-598.1	-242.9
50	-598.1	-224.9
51	-598.1	-206.9
52	-598.1	-188.9
53	-598.1	-170.9
54	-598.1	-152.9
55	-598.1	-134.9
56	-598.1	-116.9
57	-598.1	-98.91
58	-598.1	-83.91
59	-598.1	-71.91
60	-598.1	-55.9
61	-598.1	-41.92
62	-598.1	-27.94
63	-598.1	-13.96
64	-598.1	0.0
65	-598.1	14.19

N	X	Y
66	-598.1	23.69
67	-598.1	29.69
68	-598.1	43.75
69	-598.1	54.12
70	-598.1	66.12
71	-598.1	78.12
72	-598.1	90.12
73	-598.1	102.1
74	-598.1	114.1
75	-598.1	126.1
76	-598.1	138.1
77	-598.1	150.1
78	-598.1	162.1
79	-598.1	180.1
80	-598.1	198.1
81	-574.1	-386.9
82	-574.1	-368.9
83	-574.1	-350.9
84	-574.1	-332.9
85	-574.1	-314.9
86	-574.1	-296.9
87	-574.1	-278.9
88	-574.1	-260.9
89	-574.1	-242.9
90	-574.1	-224.9
91	-574.1	-206.9
92	-574.1	-188.9
93	-574.1	-170.9
94	-574.1	-152.9
95	-574.1	-134.9
96	-574.1	-116.9
97	-574.1	-98.91
98	-574.1	-83.91
99	-574.1	-71.91
100	-574.1	-55.9
101	-574.1	-41.92
102	-574.1	-27.94
103	-574.1	-13.96
104	-574.1	0.0
105	-574.1	14.19
106	-574.1	23.69
107	-574.1	29.69
108	-574.1	43.75
109	-574.1	54.12
110	-574.1	66.12
111	-574.1	78.12
112	-574.1	90.12
113	-574.1	102.1
114	-574.1	114.1
115	-574.1	126.1
116	-574.1	138.1
117	-574.1	150.1
118	-574.1	162.1
119	-574.1	180.1
120	-574.1	198.1
121	-550.1	-386.9
122	-550.1	-368.9
123	-550.1	-350.9
124	-550.1	-332.9
125	-550.1	-314.9
126	-550.1	-296.9
127	-550.1	-278.9
128	-550.1	-260.9
129	-550.1	-242.9
130	-550.1	-224.9

N	X	Y
131	-550.1	-206.9
132	-550.1	-188.9
133	-550.1	-170.9
134	-550.1	-152.9
135	-550.1	-134.9
136	-550.1	-116.9
137	-550.1	-98.91
138	-550.1	-83.91
139	-550.1	-71.91
140	-550.1	-55.9
141	-550.1	-41.92
142	-550.1	-27.94
143	-550.1	-13.96
144	-550.1	0.0
145	-550.1	14.19
146	-550.1	23.69
147	-550.1	29.69
148	-550.1	43.75
149	-550.1	54.12
150	-550.1	66.12
151	-550.1	78.12
152	-550.1	90.12
153	-550.1	102.1
154	-550.1	114.1
155	-550.1	126.1
156	-550.1	138.1
157	-550.1	150.1
158	-550.1	162.1
159	-550.1	180.1
160	-550.1	198.1
161	-526.1	-386.9
162	-526.1	-368.9
163	-526.1	-350.9
164	-526.1	-332.9
165	-526.1	-314.9
166	-526.1	-296.9
167	-526.1	-278.9
168	-526.1	-260.9
169	-526.1	-242.9
170	-526.1	-224.9
171	-526.1	-206.9
172	-526.1	-188.9
173	-526.1	-170.9
174	-526.1	-152.9
175	-526.1	-134.9
176	-526.1	-116.9
177	-526.1	-98.91
178	-526.1	-83.91
179	-526.1	-71.91
180	-526.1	-55.9
181	-526.1	-41.92
182	-526.1	-27.94
183	-526.1	-13.96
184	-526.1	0.0
185	-526.1	14.19
186	-526.1	23.69
187	-526.1	29.69
188	-526.1	43.75
189	-526.1	54.12
190	-526.1	66.12
191	-526.1	78.12
192	-526.1	90.12
193	-526.1	102.1
194	-526.1	114.1
195	-526.1	126.1

N	X	Y
196	-526.1	138.1
197	-526.1	150.1
198	-526.1	162.1
199	-526.1	180.1
200	-526.1	198.1
201	-502.1	-386.9
202	-502.1	-368.9
203	-502.1	-350.9
204	-502.1	-332.9
205	-502.1	-314.9
206	-502.1	-296.9
207	-502.1	-278.9
208	-502.1	-260.9
209	-502.1	-242.9
210	-502.1	-224.9
211	-502.1	-206.9
212	-502.1	-188.9
213	-502.1	-170.9
214	-502.1	-152.9
215	-502.1	-134.9
216	-502.1	-116.9
217	-502.1	-98.91
218	-502.1	-83.91
219	-502.1	-71.91
220	-502.1	-55.9
221	-502.1	-41.92
222	-502.1	-27.94
223	-502.1	-13.96
224	-502.1	0.0
225	-502.1	14.19
226	-502.1	23.69
227	-502.1	29.69
228	-502.1	43.75
229	-502.1	54.12
230	-502.1	66.12
231	-502.1	78.12
232	-502.1	90.12
233	-502.1	102.1
234	-502.1	114.1
235	-502.1	126.1
236	-502.1	138.1
237	-502.1	150.1
238	-502.1	162.1
239	-502.1	180.1
240	-502.1	198.1
241	-478.1	-386.9
242	-478.1	-368.9
243	-478.1	-350.9
244	-478.1	-332.9
245	-478.1	-314.9
246	-478.1	-296.9
247	-478.1	-278.9
248	-478.1	-260.9
249	-478.1	-242.9
250	-478.1	-224.9
251	-478.1	-206.9
252	-478.1	-188.9
253	-478.1	-170.9
254	-478.1	-152.9
255	-478.1	-134.9
256	-478.1	-116.9
257	-478.1	-98.91
258	-478.1	-83.91
259	-478.1	-71.91
260	-478.1	-55.9

N	X	Y
261	-478.1	-41.92
262	-478.1	-27.94
263	-478.1	-13.96
264	-478.1	0.0
265	-478.1	14.19
266	-478.1	23.69
267	-478.1	29.69
268	-478.1	43.75
269	-478.1	54.12
270	-478.1	66.12
271	-478.1	78.12
272	-478.1	90.12
273	-478.1	102.1
274	-478.1	114.1
275	-478.1	126.1
276	-478.1	138.1
277	-478.1	150.1
278	-478.1	162.1
279	-478.1	180.1
280	-478.1	198.1
281	-454.1	-386.9
282	-454.1	-368.9
283	-454.1	-350.9
284	-454.1	-332.9
285	-454.1	-314.9
286	-454.1	-296.9
287	-454.1	-278.9
288	-454.1	-260.9
289	-454.1	-242.9
290	-454.1	-224.9
291	-454.1	-206.9
292	-454.1	-188.9
293	-454.1	-170.9
294	-454.1	-152.9
295	-454.1	-134.9
296	-454.1	-116.9
297	-454.1	-98.91
298	-454.1	-83.91
299	-454.1	-71.91
300	-454.1	-55.9
301	-454.1	-41.92
302	-454.1	-27.94
303	-454.1	-13.96
304	-454.1	0.0
305	-454.1	14.19
306	-454.1	23.69
307	-454.1	29.69
308	-454.1	43.75
309	-454.1	54.12
310	-454.1	66.12
311	-454.1	78.12
312	-454.1	90.12
313	-454.1	102.1
314	-454.1	114.1
315	-454.1	126.1
316	-454.1	138.1
317	-454.1	150.1
318	-454.1	162.1
319	-454.1	180.1
320	-454.1	198.1
321	-430.1	-386.9
322	-430.1	-368.9
323	-430.1	-350.9
324	-430.1	-332.9
325	-430.1	-314.9
326	-430.1	-296.9
327	-430.1	-278.9
328	-430.1	-260.9
329	-430.1	-242.9
330	-430.1	-224.9
331	-430.1	-206.9

N	X	Y
332	-430.1	-188.9
333	-430.1	-170.9
334	-430.1	-152.9
335	-430.1	-134.9
336	-430.1	-116.9
337	-430.1	-98.91
338	-430.1	-83.91
339	-430.1	-71.91
340	-430.1	-55.9
341	-430.1	-41.92
342	-430.1	-27.94
343	-430.1	-13.96
344	-430.1	0.0
345	-430.1	14.19
346	-430.1	23.69
347	-430.1	29.69
348	-430.1	43.75
349	-430.1	54.12
350	-430.1	66.12
351	-430.1	78.12
352	-430.1	90.12
353	-430.1	102.1
354	-430.1	114.1
355	-430.1	126.1
356	-430.1	138.1
357	-430.1	150.1
358	-430.1	162.1
359	-430.1	180.1
360	-430.1	198.1
361	-406.1	-386.9
362	-406.1	-368.9
363	-406.1	-350.9
364	-406.1	-332.9
365	-406.1	-314.9
366	-406.1	-296.9
367	-406.1	-278.9
368	-406.1	-260.9
369	-406.1	-242.9
370	-406.1	-224.9
371	-406.1	-206.9
372	-406.1	-188.9
373	-406.1	-170.9
374	-406.1	-152.9
375	-406.1	-134.9
376	-406.1	-116.9
377	-406.1	-98.91
378	-406.1	-83.91
379	-406.1	-71.91
380	-406.1	-55.9
381	-406.1	-41.92
382	-406.1	-27.94
383	-406.1	-13.96
384	-406.1	0.0
385	-406.1	14.19
386	-406.1	23.69
387	-406.1	29.69
388	-406.1	43.75
389	-406.1	54.12
390	-406.1	66.12
391	-406.1	78.12
392	-406.1	90.12
393	-406.1	102.1
394	-406.1	114.1
395	-406.1	126.1
396	-406.1	138.1
397	-406.1	150.1
398	-406.1	162.1
399	-406.1	180.1
400	-406.1	198.1
401	-382.1	-386.9
402	-382.1	-368.9

N	X	Y
403	-382.1	-350.9
404	-382.1	-332.9
405	-382.1	-314.9
406	-382.1	-296.9
407	-382.1	-278.9
408	-382.1	-260.9
409	-382.1	-242.9
410	-382.1	-224.9
411	-382.1	-206.9
412	-382.1	-188.9
413	-382.1	-170.9
414	-382.1	-152.9
415	-382.1	-134.9
416	-382.1	-116.9
417	-382.1	-98.91
418	-382.1	-83.91
419	-382.1	-71.91
420	-382.1	-55.9
421	-382.1	-41.92
422	-382.1	-27.94
423	-382.1	-13.96
424	-382.1	0.0
425	-382.1	14.19
426	-382.1	23.69
427	-382.1	29.69
428	-382.1	43.75
429	-382.1	54.12
430	-382.1	66.12
431	-382.1	78.12
432	-382.1	90.12
433	-382.1	102.1
434	-382.1	114.1
435	-382.1	126.1
436	-382.1	138.1
437	-382.1	150.1
438	-382.1	162.1
439	-382.1	180.1
440	-382.1	198.1
441	-358.1	-386.9
442	-358.1	-368.9
443	-358.1	-350.9
444	-358.1	-332.9
445	-358.1	-314.9
446	-358.1	-296.9
447	-358.1	-278.9
448	-358.1	-260.9
449	-358.1	-242.9
450	-358.1	-224.9
451	-358.1	-206.9
452	-358.1	-188.9
453	-358.1	-170.9
454	-358.1	-152.9
455	-358.1	-134.9
456	-358.1	-116.9
457	-358.1	-98.91
458	-358.1	-83.91
459	-358.1	-71.91
460	-358.1	-55.9
461	-358.1	-41.92
462	-358.1	-27.94
463	-358.1	-13.96
464	-358.1	0.0
465	-358.1	14.19
466	-358.1	23.69
467	-358.1	29.69
468	-358.1	43.75
469	-358.1	54.12
470	-358.1	66.12
471	-358.1	78.12
472	-358.1	90.12
473	-358.1	102.1

N	X	Y
474	-358.1	114.1
475	-358.1	126.1
476	-358.1	138.1
477	-358.1	150.1
478	-358.1	162.1
479	-358.1	180.1
480	-358.1	198.1
481	-334.1	-386.9
482	-334.1	-368.9
483	-334.1	-350.9
484	-334.1	-332.9
485	-334.1	-314.9
486	-334.1	-296.9
487	-334.1	-278.9
488	-334.1	-260.9
489	-334.1	-242.9
490	-334.1	-224.9
491	-334.1	-206.9
492	-334.1	-188.9
493	-334.1	-170.9
494	-334.1	-152.9
495	-334.1	-134.9
496	-334.1	-116.9
497	-334.1	-98.91
498	-334.1	-83.91
499	-334.1	-71.91
500	-334.1	-55.9
501	-334.1	-41.92
502	-334.1	-27.94
503	-334.1	-13.96
504	-334.1	0.0
505	-334.1	14.19
506	-334.1	23.69
507	-334.1	29.69
508	-334.1	43.75
509	-334.1	54.12
510	-334.1	66.12
511	-334.1	78.12
512	-334.1	90.12
513	-334.1	102.1
514	-334.1	114.1
515	-334.1	126.1
516	-334.1	138.1
517	-334.1	150.1
518	-334.1	162.1
519	-334.1	180.1
520	-334.1	198.1
521	-310.1	-386.9
522	-310.1	-368.9
523	-310.1	-350.9
524	-310.1	-332.9
525	-310.1	-314.9
526	-310.1	-296.9
527	-310.1	-278.9
528	-310.1	-260.9
529	-310.1	-242.9
530	-310.1	-224.9
531	-310.1	-206.9
532	-310.1	-188.9
533	-310.1	-170.9
534	-310.1	-152.9
535	-310.1	-134.9
536	-310.1	-116.9
537	-310.1	-98.91
538	-310.1	-83.91
539	-310.1	-71.91
540	-310.1	-55.9
541	-310.1	-41.92
542	-310.1	-27.94
543	-310.1	-13.96
544	-310.1	0.0

N	X	Y
545	-310.1	14.19
546	-310.1	23.69
547	-310.1	29.69
548	-310.1	43.75
549	-310.1	54.12
550	-310.1	66.12
551	-310.1	78.12
552	-310.1	90.12
553	-310.1	102.1
554	-310.1	114.1
555	-310.1	126.1
556	-310.1	138.1
557	-310.1	150.1
558	-310.1	162.1
559	-310.1	180.1
560	-310.1	198.1
561	-286.1	-386.9
562	-286.1	-368.9
563	-286.1	-350.9
564	-286.1	-332.9
565	-286.1	-314.9
566	-286.1	-296.9
567	-286.1	-278.9
568	-286.1	-260.9
569	-286.1	-242.9
570	-286.1	-224.9
571	-286.1	-206.9
572	-286.1	-188.9
573	-286.1	-170.9
574	-286.1	-152.9
575	-286.1	-134.9
576	-286.1	-116.9
577	-286.1	-98.91
578	-286.1	-83.91
579	-286.1	-71.91
580	-286.1	-55.9
581	-286.1	-41.92
582	-286.1	-27.94
583	-286.1	-13.96
584	-286.1	0.0
585	-286.1	14.19
586	-286.1	23.69
587	-286.1	29.69
588	-286.1	43.75
589	-286.1	54.12
590	-286.1	66.12
591	-286.1	78.12
592	-286.1	90.12
593	-286.1	102.1
594	-286.1	114.1
595	-286.1	126.1
596	-286.1	138.1
597	-286.1	150.1
598	-286.1	162.1
599	-286.1	180.1
600	-286.1	198.1
601	-262.1	-386.9
602	-262.1	-368.9
603	-262.1	-350.9
604	-262.1	-332.9
605	-262.1	-314.9
606	-262.1	-296.9
607	-262.1	-278.9
608	-262.1	-260.9
609	-262.1	-242.9
610	-262.1	-224.9
611	-262.1	-206.9
612	-262.1	-188.9
613	-262.1	-170.9
614	-262.1	-152.9
615	-262.1	-134.9

N	X	Y
616	-262.1	-116.9
617	-262.1	-98.91
618	-262.1	-83.91
619	-262.1	-71.91
620	-262.1	-55.9
621	-262.1	-41.92
622	-262.1	-27.94
623	-262.1	-13.96
624	-262.1	0.0
625	-262.1	14.19
626	-262.1	23.69
627	-262.1	29.69
628	-262.1	43.75
629	-262.1	54.12
630	-262.1	66.12
631	-262.1	78.12
632	-262.1	90.12
633	-262.1	102.1
634	-262.1	114.1
635	-262.1	126.1
636	-262.1	138.1
637	-262.1	150.1
638	-262.1	162.1
639	-262.1	180.1
640	-262.1	198.1
641	-238.1	-386.9
642	-238.1	-368.9
643	-238.1	-350.9
644	-238.1	-332.9
645	-238.1	-314.9
646	-238.1	-296.9
647	-238.1	-278.9
648	-238.1	-260.9
649	-238.1	-242.9
650	-238.1	-224.9
651	-238.1	-206.9
652	-238.1	-188.9
653	-238.1	-170.9
654	-238.1	-152.9
655	-238.1	-134.9
656	-238.1	-116.9
657	-238.1	-98.91
658	-238.1	-83.91
659	-238.1	-71.91
660	-238.1	-55.9
661	-238.1	-41.92
662	-238.1	-27.94
663	-238.1	-13.96
664	-238.1	0.0
665	-238.1	14.19
666	-238.1	23.69
667	-238.1	29.69
668	-238.1	43.75
669	-238.1	54.12
670	-238.1	66.12
671	-238.1	78.12
672	-238.1	90.12
673	-238.1	102.1
674	-238.1	114.1
675	-238.1	126.1
676	-238.1	138.1
677	-238.1	150.1
678	-238.1	162.1
679	-238.1	180.1
680	-238.1	198.1
681	-214.1	-386.9
682	-214.1	-368.9
683	-214.1	-350.9
684	-214.1	-332.9
685	-214.1	-314.9
686	-214.1	-296.9

N	X	Y
687	-214.1	-278.9
688	-214.1	-260.9
689	-214.1	-242.9
690	-214.1	-224.9
691	-214.1	-206.9
692	-214.1	-188.9
693	-214.1	-170.9
694	-214.1	-152.9
695	-214.1	-134.9
696	-214.1	-116.9
697	-214.1	-98.91
698	-214.1	-83.91
699	-214.1	-71.91
700	-214.1	-55.9
701	-214.1	-41.92
702	-214.1	-27.94
703	-214.1	-13.96
704	-214.1	0.0
705	-214.1	14.19
706	-214.1	23.69
707	-214.1	29.69
708	-214.1	43.75
709	-214.1	54.12
710	-214.1	66.12
711	-214.1	78.12
712	-214.1	90.12
713	-214.1	102.1
714	-214.1	114.1
715	-214.1	126.1
716	-214.1	138.1
717	-214.1	150.1
718	-214.1	162.1
719	-214.1	180.1
720	-214.1	198.1
721	-190.1	-386.9
722	-190.1	-368.9
723	-190.1	-350.9
724	-190.1	-332.9
725	-190.1	-314.9
726	-190.1	-296.9
727	-190.1	-278.9
728	-190.1	-260.9
729	-190.1	-242.9
730	-190.1	-224.9
731	-190.1	-206.9
732	-190.1	-188.9
733	-190.1	-170.9
734	-190.1	-152.9
735	-190.1	-134.9
736	-190.1	-116.9
737	-190.1	-98.91
738	-190.1	-83.91
739	-190.1	-71.91
740	-190.1	-55.9
741	-190.1	-41.92
742	-190.1	-27.94
743	-190.1	-13.96
744	-190.1	0.0
745	-190.1	14.19
746	-190.1	23.69
747	-190.1	29.69
748	-190.1	43.75
749	-190.1	54.12
750	-190.1	66.12
751	-190.1	78.12
752	-190.1	90.12
753	-190.1	102.1
754	-190.1	114.1
755	-190.1	126.1
756	-190.1	138.1
757	-190.1	150.1

N	X	Y
758	-190.1	162.1
759	-190.1	180.1
760	-190.1	198.1
761	-166.1	-386.9
762	-166.1	-368.9
763	-166.1	-350.9
764	-166.1	-332.9
765	-166.1	-314.9
766	-166.1	-296.9
767	-166.1	-278.9
768	-166.1	-260.9
769	-166.1	-242.9
770	-166.1	-224.9
771	-166.1	-206.9
772	-166.1	-188.9
773	-166.1	-170.9
774	-166.1	-152.9
775	-166.1	-134.9
776	-166.1	-116.9
777	-166.1	-98.91
778	-166.1	-83.91
779	-166.1	-71.91
780	-166.1	-55.9
781	-166.1	-41.92
782	-166.1	-27.94
783	-166.1	-13.96
784	-166.1	0.0
785	-166.1	14.19
786	-166.1	23.69
787	-166.1	29.69
788	-166.1	43.75
789	-166.1	54.12
790	-166.1	66.12
791	-166.1	78.12
792	-166.1	90.12
793	-166.1	102.1
794	-166.1	114.1
795	-166.1	126.1
796	-166.1	138.1
797	-166.1	150.1
798	-166.1	162.1
799	-166.1	180.1
800	-166.1	198.1
801	-142.1	-386.9
802	-142.1	-368.9
803	-142.1	-350.9
804	-142.1	-332.9
805	-142.1	-314.9
806	-142.1	-296.9
807	-142.1	-278.9
808	-142.1	-260.9
809	-142.1	-242.9
810	-142.1	-224.9
811	-142.1	-206.9
812	-142.1	-188.9
813	-142.1	-170.9
814	-142.1	-152.9
815	-142.1	-134.9
816	-142.1	-116.9
817	-142.1	-98.91
818	-142.1	-83.91
819	-142.1	-71.91
820	-142.1	-55.9
821	-142.1	-41.92
822	-142.1	-27.94
823	-142.1	-13.96
824	-142.1	0.0
825	-142.1	14.19
826	-142.1	23.69
827	-142.1	29.69
828	-142.1	43.75

N	X	Y
829	-142.1	54.12
830	-142.1	66.12
831	-142.1	78.12
832	-142.1	90.12
833	-142.1	102.1
834	-142.1	114.1
835	-142.1	126.1
836	-142.1	138.1
837	-142.1	150.1
838	-142.1	162.1
839	-142.1	180.1
840	-142.1	198.1
841	-123.5	-386.9
842	-123.5	-368.9
843	-123.5	-350.9
844	-123.5	-332.9
845	-123.5	-314.9
846	-123.5	-296.9
847	-123.5	-278.9
848	-123.5	-260.9
849	-123.5	-242.9
850	-123.5	-224.9
851	-123.5	-206.9
852	-123.5	-188.9
853	-123.5	-170.9
854	-123.5	-152.9
855	-123.5	-134.9
856	-123.5	-116.9
857	-123.5	-98.91
858	-123.5	-83.91
859	-123.5	-71.91
860	-123.5	-55.9
861	-123.5	-41.92
862	-123.5	-27.94
863	-123.5	-13.96
864	-123.5	0.0
865	-123.5	14.19
866	-123.5	23.69
867	-123.5	29.69
868	-123.5	43.75
869	-123.5	54.12
870	-123.5	66.12
871	-123.5	78.12
872	-123.5	90.12
873	-123.5	102.1
874	-123.5	114.1
875	-123.5	126.1
876	-123.5	138.1
877	-123.5	150.1
878	-123.5	162.1
879	-123.5	180.1
880	-123.5	198.1
881	-114.4	-55.84
882	-109.0	-386.9
883	-109.0	-368.9
884	-109.0	-350.9
885	-109.0	-332.9
886	-109.0	-314.9
887	-109.0	-296.9
888	-109.0	-278.9
889	-109.0	-260.9
890	-109.0	-242.9
891	-109.0	-224.9
892	-109.0	-206.9
893	-109.0	-188.9
894	-109.0	-170.9
895	-109.0	-152.9
896	-109.0	-134.9
897	-109.0	-116.9
898	-109.0	-98.91
899	-109.0	-83.91

N	X	Y
900	-109.0	-71.91
901	-109.0	-27.94
902	-109.0	-13.96
903	-109.0	0.0
904	-109.0	14.19
905	-109.0	23.69
906	-109.0	29.69
907	-109.0	43.75
908	-109.0	54.12
909	-109.0	66.12
910	-109.0	78.12
911	-109.0	90.12
912	-109.0	102.1
913	-109.0	114.1
914	-109.0	126.1
915	-109.0	138.1
916	-109.0	150.1
917	-109.0	162.1
918	-109.0	180.1
919	-109.0	198.1
920	-106.5	-41.82
921	-98.6	-27.89
922	-97.0	-386.9
923	-97.0	-368.9
924	-97.0	-350.9
925	-97.0	-332.9
926	-97.0	-314.9
927	-97.0	-296.9
928	-97.0	-278.9
929	-97.0	-260.9
930	-97.0	-242.9
931	-97.0	-224.9
932	-97.0	-206.9
933	-97.0	-188.9
934	-97.0	-170.9
935	-97.0	-152.9
936	-97.0	-134.9
937	-97.0	-116.9
938	-97.0	-98.91
939	-97.0	-83.91
940	-97.0	-71.91
941	-97.0	-13.96
942	-97.0	0.0
943	-97.0	14.19
944	-97.0	23.69
945	-97.0	29.69
946	-97.0	43.75
947	-97.0	54.12
948	-97.0	66.12
949	-97.0	78.12
950	-97.0	90.12
951	-97.0	102.1
952	-97.0	114.1
953	-97.0	126.1
954	-97.0	138.1
955	-97.0	150.1
956	-97.0	162.1
957	-97.0	180.1
958	-97.0	198.1
959	-90.69	-13.91
960	-88.0	-386.9
961	-88.0	-368.9
962	-88.0	-350.9
963	-88.0	-332.9
964	-88.0	-314.9
965	-88.0	-296.9
966	-88.0	-278.9
967	-88.0	-260.9
968	-88.0	-242.9
969	-88.0	-224.9
970	-88.0	-206.9

N	X	Y
971	-88.0	-188.9
972	-88.0	-170.9
973	-88.0	-152.9
974	-88.0	-134.9
975	-88.0	-116.9
976	-88.0	-98.91
977	-88.0	-83.91
978	-88.0	-71.91
979	-88.0	0.0
980	-88.0	14.19
981	-88.0	23.69
982	-88.0	29.69
983	-88.0	43.75
984	-88.0	54.12
985	-88.0	66.12
986	-88.0	78.12
987	-88.0	90.12
988	-88.0	102.1
989	-88.0	114.1
990	-88.0	126.1
991	-88.0	138.1
992	-88.0	150.1
993	-88.0	162.1
994	-88.0	180.1
995	-88.0	198.1
996	-82.69	0.23
997	-82.0	14.19
998	-82.0	23.69
999	-82.0	29.69
1000	-82.0	43.75
1001	-82.0	54.12
1002	-82.0	66.12
1003	-82.0	78.12
1004	-82.0	90.12
1005	-82.0	102.1
1006	-82.0	114.1
1007	-82.0	126.1
1008	-82.0	138.1
1009	-82.0	150.1
1010	-82.0	162.1
1011	-82.0	180.1
1012	-82.0	198.1
1013	-76.0	-386.9
1014	-76.0	-368.9
1015	-76.0	-350.9
1016	-76.0	-332.9
1017	-76.0	-314.9
1018	-76.0	-296.9
1019	-76.0	-278.9
1020	-76.0	-260.9
1021	-76.0	-242.9
1022	-76.0	-224.9
1023	-76.0	-206.9
1024	-76.0	-188.9
1025	-76.0	-170.9
1026	-76.0	-152.9
1027	-76.0	-134.9
1028	-76.0	-116.9
1029	-76.0	-98.91
1030	-76.0	-83.91
1031	-76.0	-71.91
1032	-74.56	14.6
1033	-73.38	29.69
1034	-73.38	43.75
1035	-73.38	54.12
1036	-73.38	66.12
1037	-73.38	78.12
1038	-73.38	90.12
1039	-73.38	102.1
1040	-73.38	114.1
1041	-73.38	126.1

N	X	Y
1042	-73.38	138.1
1043	-73.38	150.1
1044	-73.38	162.1
1045	-73.38	180.1
1046	-73.38	198.1
1047	-69.75	23.0
1048	-66.07	28.42
1049	-67.13	33.81
1050	-67.13	43.75
1051	-67.13	54.12
1052	-67.13	66.12
1053	-67.13	78.12
1054	-67.13	90.12
1055	-67.13	102.1
1056	-67.13	114.1
1057	-67.13	126.1
1058	-67.13	138.1
1059	-67.13	150.1
1060	-67.13	162.1
1061	-67.13	180.1
1062	-67.13	198.1
1063	-61.0	-386.9
1064	-61.0	-368.9
1065	-61.0	-350.9
1066	-61.0	-332.9
1067	-61.0	-314.9
1068	-61.0	-296.9
1069	-61.0	-278.9
1070	-61.0	-260.9
1071	-61.0	-242.9
1072	-61.0	-224.9
1073	-61.0	-206.9
1074	-61.0	-188.9
1075	-61.0	-170.9
1076	-61.0	-152.9
1077	-61.0	-134.9
1078	-61.0	-116.9
1079	-61.0	-98.91
1080	-61.0	-83.91
1081	-61.0	-71.91
1082	-58.19	32.38
1083	-58.19	38.38
1084	-58.19	43.75
1085	-58.19	54.12
1086	-58.19	66.12
1087	-58.19	78.12
1088	-58.19	90.12
1089	-58.19	102.1
1090	-58.19	114.1
1091	-58.19	126.1
1092	-58.19	138.1
1093	-58.19	150.1
1094	-58.19	162.1
1095	-58.19	180.1
1096	-58.19	198.1
1097	-48.94	35.5
1098	-48.94	41.5
1099	-48.94	43.75
1100	-48.94	54.12
1101	-48.94	66.12
1102	-48.94	78.12
1103	-48.94	90.12
1104	-48.94	102.1
1105	-48.94	114.1
1106	-48.94	126.1
1107	-48.94	138.1
1108	-48.94	150.1
1109	-48.94	162.1
1110	-48.94	180.1
1111	-48.94	198.1
1112	-46.0	-386.9

N	X	Y
1113	-46.0	-368.9
1114	-46.0	-350.9
1115	-46.0	-332.9
1116	-46.0	-314.9
1117	-46.0	-296.9
1118	-46.0	-278.9
1119	-46.0	-260.9
1120	-46.0	-242.9
1121	-46.0	-224.9
1122	-46.0	-206.9
1123	-46.0	-188.9
1124	-46.0	-170.9
1125	-46.0	-152.9
1126	-46.0	-134.9
1127	-46.0	-116.9
1128	-46.0	-98.91
1129	-46.0	-83.91
1130	-46.0	-71.91
1131	-40.0	37.65
1132	-40.0	43.75
1133	-40.0	54.12
1134	-40.0	66.12
1135	-40.0	78.12
1136	-40.0	90.12
1137	-40.0	102.1
1138	-40.0	114.1
1139	-40.0	126.1
1140	-40.0	138.1
1141	-40.0	150.1
1142	-40.0	162.1
1143	-40.0	180.1
1144	-40.0	198.1
1145	-31.0	-386.9
1146	-31.0	-368.9
1147	-31.0	-350.9
1148	-31.0	-332.9
1149	-31.0	-314.9
1150	-31.0	-296.9
1151	-31.0	-278.9
1152	-31.0	-260.9
1153	-31.0	-242.9
1154	-31.0	-224.9
1155	-31.0	-206.9
1156	-31.0	-188.9
1157	-31.0	-170.9
1158	-31.0	-152.9
1159	-31.0	-134.9
1160	-31.0	-116.9
1161	-31.0	-98.91
1162	-31.0	-83.91
1163	-31.0	-71.91
1164	-30.0	39.69
1165	-30.0	45.69
1166	-30.0	54.12
1167	-30.0	66.12
1168	-30.0	78.12
1169	-30.0	90.12
1170	-30.0	102.1
1171	-30.0	114.1
1172	-30.0	126.1
1173	-30.0	138.1
1174	-30.0	150.1
1175	-30.0	162.1
1176	-30.0	180.1
1177	-30.0	198.1
1178	-20.0	41.0
1179	-20.0	47.0
1180	-20.0	54.12
1181	-20.0	66.12
1182	-20.0	78.12
1183	-20.0	90.12

N	X	Y
1184	-20.0	102.1
1185	-20.0	114.1
1186	-20.0	126.1
1187	-20.0	138.1
1188	-20.0	150.1
1189	-20.0	162.1
1190	-20.0	180.1
1191	-20.0	198.1
1192	-16.0	-386.9
1193	-16.0	-368.9
1194	-16.0	-350.9
1195	-16.0	-332.9
1196	-16.0	-314.9
1197	-16.0	-296.9
1198	-16.0	-278.9
1199	-16.0	-260.9
1200	-16.0	-242.9
1201	-16.0	-224.9
1202	-16.0	-206.9
1203	-16.0	-188.9
1204	-16.0	-170.9
1205	-16.0	-152.9
1206	-16.0	-134.9
1207	-16.0	-116.9
1208	-16.0	-98.91
1209	-16.0	-83.91
1210	-16.0	-71.91
1211	-10.0	41.88
1212	-10.0	47.88
1213	-10.0	54.12
1214	-10.0	66.12
1215	-10.0	78.12
1216	-10.0	90.12
1217	-10.0	102.1
1218	-10.0	114.1
1219	-10.0	126.1
1220	-10.0	138.1
1221	-10.0	150.1
1222	-10.0	162.1
1223	-10.0	180.1
1224	-10.0	198.1
1225	0.0	-386.9
1226	0.0	-368.9
1227	0.0	-350.9
1228	0.0	-332.9
1229	0.0	-314.9
1230	0.0	-296.9
1231	0.0	-278.9
1232	0.0	-260.9
1233	0.0	-242.9
1234	0.0	-224.9
1235	0.0	-206.9
1236	0.0	-188.9
1237	0.0	-170.9
1238	0.0	-152.9
1239	0.0	-134.9
1240	0.0	-116.9
1241	0.0	-98.91
1242	0.0	-83.91
1243	0.0	-71.91
1244	0.0	42.12
1245	0.0	48.12
1246	0.0	54.12
1247	0.0	66.12
1248	0.0	78.12
1249	0.0	90.12
1250	0.0	102.1
1251	0.0	114.1
1252	0.0	126.1
1253	0.0	138.1
1254	0.0	150.1

N	X	Y
1255	0.0	162.1
1256	0.0	180.1
1257	0.0	198.1
1258	10.0	41.88
1259	10.0	47.88
1260	10.0	54.12
1261	10.0	66.12
1262	10.0	78.12
1263	10.0	90.12
1264	10.0	102.1
1265	10.0	114.1
1266	10.0	126.1
1267	10.0	138.1
1268	10.0	150.1
1269	10.0	162.1
1270	10.0	180.1
1271	10.0	198.1
1272	16.0	-386.9
1273	16.0	-368.9
1274	16.0	-350.9
1275	16.0	-332.9
1276	16.0	-314.9
1277	16.0	-296.9
1278	16.0	-278.9
1279	16.0	-260.9
1280	16.0	-242.9
1281	16.0	-224.9
1282	16.0	-206.9
1283	16.0	-188.9
1284	16.0	-170.9
1285	16.0	-152.9
1286	16.0	-134.9
1287	16.0	-116.9
1288	16.0	-98.91
1289	16.0	-83.91
1290	16.0	-71.91
1291	20.0	41.0
1292	20.0	47.0
1293	20.0	54.12
1294	20.0	66.12
1295	20.0	78.12
1296	20.0	90.12
1297	20.0	102.1
1298	20.0	114.1
1299	20.0	126.1
1300	20.0	138.1
1301	20.0	150.1
1302	20.0	162.1
1303	20.0	180.1
1304	20.0	198.1
1305	30.0	39.69
1306	30.0	45.69
1307	30.0	54.12
1308	30.0	66.12
1309	30.0	78.12
1310	30.0	90.12
1311	30.0	102.1
1312	30.0	114.1
1313	30.0	126.1
1314	30.0	138.1
1315	30.0	150.1
1316	30.0	162.1
1317	30.0	180.1
1318	30.0	198.1
1319	31.0	-386.9
1320	31.0	-368.9
1321	31.0	-350.9
1322	31.0	-332.9
1323	31.0	-314.9
1324	31.0	-296.9
1325	31.0	-278.9

N	X	Y
1326	31.0	-260.9
1327	31.0	-242.9
1328	31.0	-224.9
1329	31.0	-206.9
1330	31.0	-188.9
1331	31.0	-170.9
1332	31.0	-152.9
1333	31.0	-134.9
1334	31.0	-116.9
1335	31.0	-98.91
1336	31.0	-83.91
1337	31.0	-71.91
1338	40.0	37.65
1339	40.0	43.75
1340	40.0	54.12
1341	40.0	66.12
1342	40.0	78.12
1343	40.0	90.12
1344	40.0	102.1
1345	40.0	114.1
1346	40.0	126.1
1347	40.0	138.1
1348	40.0	150.1
1349	40.0	162.1
1350	40.0	180.1
1351	40.0	198.1
1352	46.0	-386.9
1353	46.0	-368.9
1354	46.0	-350.9
1355	46.0	-332.9
1356	46.0	-314.9
1357	46.0	-296.9
1358	46.0	-278.9
1359	46.0	-260.9
1360	46.0	-242.9
1361	46.0	-224.9
1362	46.0	-206.9
1363	46.0	-188.9
1364	46.0	-170.9
1365	46.0	-152.9
1366	46.0	-134.9
1367	46.0	-116.9
1368	46.0	-98.91
1369	46.0	-83.91
1370	46.0	-71.91
1371	48.94	35.5
1372	48.94	41.5
1373	48.94	43.75
1374	48.94	54.12
1375	48.94	66.12
1376	48.94	78.12
1377	48.94	90.12
1378	48.94	102.1
1379	48.94	114.1
1380	48.94	126.1
1381	48.94	138.1
1382	48.94	150.1
1383	48.94	162.1
1384	48.94	180.1
1385	48.94	198.1
1386	58.19	32.38
1387	58.19	38.38
1388	58.19	43.75
1389	58.19	54.12
1390	58.19	66.12
1391	58.19	78.12
1392	58.19	90.12
1393	58.19	102.1
1394	58.19	114.1
1395	58.19	126.1
1396	58.19	138.1

N	X	Y
1397	58.19	150.1
1398	58.19	162.1
1399	58.19	180.1
1400	58.19	198.1
1401	61.0	-386.9
1402	61.0	-368.9
1403	61.0	-350.9
1404	61.0	-332.9
1405	61.0	-314.9
1406	61.0	-296.9
1407	61.0	-278.9
1408	61.0	-260.9
1409	61.0	-242.9
1410	61.0	-224.9
1411	61.0	-206.9
1412	61.0	-188.9
1413	61.0	-170.9
1414	61.0	-152.9
1415	61.0	-134.9
1416	61.0	-116.9
1417	61.0	-98.91
1418	61.0	-83.91
1419	61.0	-71.91
1420	67.13	33.81
1421	67.13	43.75
1422	67.13	54.12
1423	67.13	66.12
1424	67.13	78.12
1425	67.13	90.12
1426	67.13	102.1
1427	67.13	114.1
1428	67.13	126.1
1429	67.13	138.1
1430	67.13	150.1
1431	67.13	162.1
1432	67.13	180.1
1433	67.13	198.1
1434	66.39	28.13
1435	69.75	23.0
1436	73.38	29.69
1437	73.38	43.75
1438	73.38	54.12
1439	73.38	66.12
1440	73.38	78.12
1441	73.38	90.12
1442	73.38	102.1
1443	73.38	114.1
1444	73.38	126.1
1445	73.38	138.1
1446	73.38	150.1
1447	73.38	162.1
1448	73.38	180.1
1449	73.38	198.1
1450	74.56	14.6
1451	76.0	-386.9
1452	76.0	-368.9
1453	76.0	-350.9
1454	76.0	-332.9
1455	76.0	-314.9
1456	76.0	-296.9
1457	76.0	-278.9
1458	76.0	-260.9
1459	76.0	-242.9
1460	76.0	-224.9
1461	76.0	-206.9
1462	76.0	-188.9
1463	76.0	-170.9
1464	76.0	-152.9
1465	76.0	-134.9
1466	76.0	-116.9
1467	76.0	-98.91

N	X	Y
1468	76.0	-83.91
1469	76.0	-71.91
1470	82.0	14.19
1471	82.0	23.69
1472	82.0	29.69
1473	82.0	43.75
1474	82.0	54.12
1475	82.0	66.12
1476	82.0	78.12
1477	82.0	90.12
1478	82.0	102.1
1479	82.0	114.1
1480	82.0	126.1
1481	82.0	138.1
1482	82.0	150.1
1483	82.0	162.1
1484	82.0	180.1
1485	82.0	198.1
1486	82.69	0.23
1487	88.0	-386.9
1488	88.0	-368.9
1489	88.0	-350.9
1490	88.0	-332.9
1491	88.0	-314.9
1492	88.0	-296.9
1493	88.0	-278.9
1494	88.0	-260.9
1495	88.0	-242.9
1496	88.0	-224.9
1497	88.0	-206.9
1498	88.0	-188.9
1499	88.0	-170.9
1500	88.0	-152.9
1501	88.0	-134.9
1502	88.0	-116.9
1503	88.0	-98.91
1504	88.0	-83.91
1505	88.0	-71.91
1506	88.0	0.0
1507	88.0	14.19
1508	88.0	23.69
1509	88.0	29.69
1510	88.0	43.75
1511	88.0	54.12
1512	88.0	66.12
1513	88.0	78.12
1514	88.0	90.12
1515	88.0	102.1
1516	88.0	114.1
1517	88.0	126.1
1518	88.0	138.1
1519	88.0	150.1
1520	88.0	162.1
1521	88.0	180.1
1522	88.0	198.1
1523	90.69	-13.91
1524	97.0	-386.9
1525	97.0	-368.9
1526	97.0	-350.9
1527	97.0	-332.9
1528	97.0	-314.9
1529	97.0	-296.9
1530	97.0	-278.9
1531	97.0	-260.9
1532	97.0	-242.9
1533	97.0	-224.9
1534	97.0	-206.9
1535	97.0	-188.9
1536	97.0	-170.9
1537	97.0	-152.9
1538	97.0	-134.9

N	X	Y
1539	97.0	-116.9
1540	97.0	-98.91
1541	97.0	-83.91
1542	97.0	-71.91
1543	97.0	-13.96
1544	97.0	0.0
1545	97.0	14.19
1546	97.0	23.69
1547	97.0	29.69
1548	97.0	43.75
1549	97.0	54.12
1550	97.0	66.12
1551	97.0	78.12
1552	97.0	90.12
1553	97.0	102.1
1554	97.0	114.1
1555	97.0	126.1
1556	97.0	138.1
1557	97.0	150.1
1558	97.0	162.1
1559	97.0	180.1
1560	97.0	198.1
1561	98.6	-27.89
1562	106.5	-41.82
1563	109.0	-386.9
1564	109.0	-368.9
1565	109.0	-350.9
1566	109.0	-332.9
1567	109.0	-314.9
1568	109.0	-296.9
1569	109.0	-278.9
1570	109.0	-260.9
1571	109.0	-242.9
1572	109.0	-224.9
1573	109.0	-206.9
1574	109.0	-188.9
1575	109.0	-170.9
1576	109.0	-152.9
1577	109.0	-134.9
1578	109.0	-116.9
1579	109.0	-98.91
1580	109.0	-83.91
1581	109.0	-71.91
1582	109.0	-27.94
1583	109.0	-13.96
1584	109.0	0.0
1585	109.0	14.19
1586	109.0	23.69
1587	109.0	29.69
1588	109.0	43.75
1589	109.0	54.12
1590	109.0	66.12
1591	109.0	78.12
1592	109.0	90.12
1593	109.0	102.1
1594	109.0	114.1
1595	109.0	126.1
1596	109.0	138.1
1597	109.0	150.1
1598	109.0	162.1
1599	109.0	180.1
1600	109.0	198.1
1601	114.4	-55.84
1602	123.5	-386.9
1603	123.5	-368.9
1604	123.5	-350.9
1605	123.5	-332.9
1606	123.5	-314.9
1607	123.5	-296.9
1608	123.5	-278.9
1609	123.5	-260.9

N	X	Y
1610	123.5	-242.9
1611	123.5	-224.9
1612	123.5	-206.9
1613	123.5	-188.9
1614	123.5	-170.9
1615	123.5	-152.9
1616	123.5	-134.9
1617	123.5	-116.9
1618	123.5	-98.91
1619	123.5	-83.91
1620	123.5	-71.91
1621	123.5	-55.9
1622	123.5	-41.92
1623	123.5	-27.94
1624	123.5	-13.96
1625	123.5	0.0
1626	123.5	14.19
1627	123.5	23.69
1628	123.5	29.69
1629	123.5	43.75
1630	123.5	54.12
1631	123.5	66.12
1632	123.5	78.12
1633	123.5	90.12
1634	123.5	102.1
1635	123.5	114.1
1636	123.5	126.1
1637	123.5	138.1
1638	123.5	150.1
1639	123.5	162.1
1640	123.5	180.1
1641	123.5	198.1
1642	142.1	-386.9
1643	142.1	-368.9
1644	142.1	-350.9
1645	142.1	-332.9
1646	142.1	-314.9
1647	142.1	-296.9
1648	142.1	-278.9
1649	142.1	-260.9
1650	142.1	-242.9
1651	142.1	-224.9
1652	142.1	-206.9
1653	142.1	-188.9
1654	142.1	-170.9
1655	142.1	-152.9
1656	142.1	-134.9
1657	142.1	-116.9
1658	142.1	-98.91
1659	142.1	-83.91
1660	142.1	-71.91
1661	142.1	-55.9
1662	142.1	-41.92
1663	142.1	-27.94
1664	142.1	-13.96
1665	142.1	0.0
1666	142.1	14.19
1667	142.1	23.69
1668	142.1	29.69
1669	142.1	43.75
1670	142.1	54.12
1671	142.1	66.12
1672	142.1	78.12
1673	142.1	90.12
1674	142.1	102.1
1675	142.1	114.1
1676	142.1	126.1
1677	142.1	138.1
1678	142.1	150.1
1679	142.1	162.1
1680	142.1	180.1

N	X	Y
1681	142.1	198.1
1682	166.1	-386.9
1683	166.1	-368.9
1684	166.1	-350.9
1685	166.1	-332.9
1686	166.1	-314.9
1687	166.1	-296.9
1688	166.1	-278.9
1689	166.1	-260.9
1690	166.1	-242.9
1691	166.1	-224.9
1692	166.1	-206.9
1693	166.1	-188.9
1694	166.1	-170.9
1695	166.1	-152.9
1696	166.1	-134.9
1697	166.1	-116.9
1698	166.1	-98.91
1699	166.1	-83.91
1700	166.1	-71.91
1701	166.1	-55.9
1702	166.1	-41.92
1703	166.1	-27.94
1704	166.1	-13.96
1705	166.1	0.0
1706	166.1	14.19
1707	166.1	23.69
1708	166.1	29.69
1709	166.1	43.75
1710	166.1	54.12
1711	166.1	66.12
1712	166.1	78.12
1713	166.1	90.12
1714	166.1	102.1
1715	166.1	114.1
1716	166.1	126.1
1717	166.1	138.1
1718	166.1	150.1
1719	166.1	162.1
1720	166.1	180.1
1721	166.1	198.1
1722	190.1	-386.9
1723	190.1	-368.9
1724	190.1	-350.9
1725	190.1	-332.9
1726	190.1	-314.9
1727	190.1	-296.9
1728	190.1	-278.9
1729	190.1	-260.9
1730	190.1	-242.9
1731	190.1	-224.9
1732	190.1	-206.9
1733	190.1	-188.9
1734	190.1	-170.9
1735	190.1	-152.9
1736	190.1	-134.9
1737	190.1	-116.9
1738	190.1	-98.91
1739	190.1	-83.91
1740	190.1	-71.91
1741	190.1	-55.9
1742	190.1	-41.92
1743	190.1	-27.94
1744	190.1	-13.96
1745	190.1	0.0
1746	190.1	14.19
1747	190.1	23.69
1748	190.1	29.69
1749	190.1	43.75
1750	190.1	54.12
1751	190.1	66.12

N	X	Y
1752	190.1	78.12
1753	190.1	90.12
1754	190.1	102.1
1755	190.1	114.1
1756	190.1	126.1
1757	190.1	138.1
1758	190.1	150.1
1759	190.1	162.1
1760	190.1	180.1
1761	190.1	198.1
1762	214.1	-386.9
1763	214.1	-368.9
1764	214.1	-350.9
1765	214.1	-332.9
1766	214.1	-314.9
1767	214.1	-296.9
1768	214.1	-278.9
1769	214.1	-260.9
1770	214.1	-242.9
1771	214.1	-224.9
1772	214.1	-206.9
1773	214.1	-188.9
1774	214.1	-170.9
1775	214.1	-152.9
1776	214.1	-134.9
1777	214.1	-116.9
1778	214.1	-98.91
1779	214.1	-83.91
1780	214.1	-71.91
1781	214.1	-55.9
1782	214.1	-41.92
1783	214.1	-27.94
1784	214.1	-13.96
1785	214.1	0.0
1786	214.1	14.19
1787	214.1	23.69
1788	214.1	29.69
1789	214.1	43.75
1790	214.1	54.12
1791	214.1	66.12
1792	214.1	78.12
1793	214.1	90.12
1794	214.1	102.1
1795	214.1	114.1
1796	214.1	126.1
1797	214.1	138.1
1798	214.1	150.1
1799	214.1	162.1
1800	214.1	180.1
1801	214.1	198.1
1802	238.1	-386.9
1803	238.1	-368.9
1804	238.1	-350.9
1805	238.1	-332.9
1806	238.1	-314.9
1807	238.1	-296.9
1808	238.1	-278.9
1809	238.1	-260.9
1810	238.1	-242.9
1811	238.1	-224.9
1812	238.1	-206.9
1813	238.1	-188.9
1814	238.1	-170.9
1815	238.1	-152.9
1816	238.1	-134.9
1817	238.1	-116.9
1818	238.1	-98.91
1819	238.1	-83.91
1820	238.1	-71.91
1821	238.1	-55.9
1822	238.1	-41.92

N	X	Y
1823	238.1	-27.94
1824	238.1	-13.96
1825	238.1	0.0
1826	238.1	14.19
1827	238.1	23.69
1828	238.1	29.69
1829	238.1	43.75
1830	238.1	54.12
1831	238.1	66.12
1832	238.1	78.12
1833	238.1	90.12
1834	238.1	102.1
1835	238.1	114.1
1836	238.1	126.1
1837	238.1	138.1
1838	238.1	150.1
1839	238.1	162.1
1840	238.1	180.1
1841	238.1	198.1
1842	262.1	-386.9
1843	262.1	-368.9
1844	262.1	-350.9
1845	262.1	-332.9
1846	262.1	-314.9
1847	262.1	-296.9
1848	262.1	-278.9
1849	262.1	-260.9
1850	262.1	-242.9
1851	262.1	-224.9
1852	262.1	-206.9
1853	262.1	-188.9
1854	262.1	-170.9
1855	262.1	-152.9
1856	262.1	-134.9
1857	262.1	-116.9
1858	262.1	-98.91
1859	262.1	-83.91
1860	262.1	-71.91
1861	262.1	-55.9
1862	262.1	-41.92
1863	262.1	-27.94
1864	262.1	-13.96
1865	262.1	0.0
1866	262.1	14.19
1867	262.1	23.69
1868	262.1	29.69
1869	262.1	43.75
1870	262.1	54.12
1871	262.1	66.12
1872	262.1	78.12
1873	262.1	90.12
1874	262.1	102.1
1875	262.1	114.1
1876	262.1	126.1
1877	262.1	138.1
1878	262.1	150.1
1879	262.1	162.1
1880	262.1	180.1
1881	262.1	198.1
1882	286.1	-386.9
1883	286.1	-368.9
1884	286.1	-350.9
1885	286.1	-332.9
1886	286.1	-314.9
1887	286.1	-296.9
1888	286.1	-278.9
1889	286.1	-260.9
1890	286.1	-242.9
1891	286.1	-224.9
1892	286.1	-206.9
1893	286.1	-188.9

N	X	Y
1894	286.1	-170.9
1895	286.1	-152.9
1896	286.1	-134.9
1897	286.1	-116.9
1898	286.1	-98.91
1899	286.1	-83.91
1900	286.1	-71.91
1901	286.1	-55.9
1902	286.1	-41.92
1903	286.1	-27.94
1904	286.1	-13.96
1905	286.1	0.0
1906	286.1	14.19
1907	286.1	23.69
1908	286.1	29.69
1909	286.1	43.75
1910	286.1	54.12
1911	286.1	66.12
1912	286.1	78.12
1913	286.1	90.12
1914	286.1	102.1
1915	286.1	114.1
1916	286.1	126.1
1917	286.1	138.1
1918	286.1	150.1
1919	286.1	162.1
1920	286.1	180.1
1921	286.1	198.1
1922	310.1	-386.9
1923	310.1	-368.9
1924	310.1	-350.9
1925	310.1	-332.9
1926	310.1	-314.9
1927	310.1	-296.9
1928	310.1	-278.9
1929	310.1	-260.9
1930	310.1	-242.9
1931	310.1	-224.9
1932	310.1	-206.9
1933	310.1	-188.9
1934	310.1	-170.9
1935	310.1	-152.9
1936	310.1	-134.9
1937	310.1	-116.9
1938	310.1	-98.91
1939	310.1	-83.91
1940	310.1	-71.91
1941	310.1	-55.9
1942	310.1	-41.92
1943	310.1	-27.94
1944	310.1	-13.96
1945	310.1	0.0
1946	310.1	14.19
1947	310.1	23.69
1948	310.1	29.69
1949	310.1	43.75
1950	310.1	54.12
1951	310.1	66.12
1952	310.1	78.12
1953	310.1	90.12
1954	310.1	102.1
1955	310.1	114.1
1956	310.1	126.1
1957	310.1	138.1
1958	310.1	150.1
1959	310.1	162.1
1960	310.1	180.1
1961	310.1	198.1
1962	334.1	-386.9
1963	334.1	-368.9
1964	334.1	-350.9

N	X	Y
1965	334.1	-332.9
1966	334.1	-314.9
1967	334.1	-296.9
1968	334.1	-278.9
1969	334.1	-260.9
1970	334.1	-242.9
1971	334.1	-224.9
1972	334.1	-206.9
1973	334.1	-188.9
1974	334.1	-170.9
1975	334.1	-152.9
1976	334.1	-134.9
1977	334.1	-116.9
1978	334.1	-98.91
1979	334.1	-83.91
1980	334.1	-71.91
1981	334.1	-55.9
1982	334.1	-41.92
1983	334.1	-27.94
1984	334.1	-13.96
1985	334.1	0.0
1986	334.1	14.19
1987	334.1	23.69
1988	334.1	29.69
1989	334.1	43.75
1990	334.1	54.12
1991	334.1	66.12
1992	334.1	78.12
1993	334.1	90.12
1994	334.1	102.1
1995	334.1	114.1
1996	334.1	126.1
1997	334.1	138.1
1998	334.1	150.1
1999	334.1	162.1
2000	334.1	180.1
2001	334.1	198.1
2002	358.1	-386.9
2003	358.1	-368.9
2004	358.1	-350.9
2005	358.1	-332.9
2006	358.1	-314.9
2007	358.1	-296.9
2008	358.1	-278.9
2009	358.1	-260.9
2010	358.1	-242.9
2011	358.1	-224.9
2012	358.1	-206.9
2013	358.1	-188.9
2014	358.1	-170.9
2015	358.1	-152.9
2016	358.1	-134.9
2017	358.1	-116.9
2018	358.1	-98.91
2019	358.1	-83.91
2020	358.1	-71.91
2021	358.1	-55.9
2022	358.1	-41.92
2023	358.1	-27.94
2024	358.1	-13.96
2025	358.1	0.0
2026	358.1	14.19
2027	358.1	23.69
2028	358.1	29.69
2029	358.1	43.75
2030	358.1	54.12
2031	358.1	66.12
2032	358.1	78.12
2033	358.1	90.12
2034	358.1	102.1
2035	358.1	114.1

N	X	Y
2036	358.1	126.1
2037	358.1	138.1
2038	358.1	150.1
2039	358.1	162.1
2040	358.1	180.1
2041	358.1	198.1
2042	382.1	-386.9
2043	382.1	-368.9
2044	382.1	-350.9
2045	382.1	-332.9
2046	382.1	-314.9
2047	382.1	-296.9
2048	382.1	-278.9
2049	382.1	-260.9
2050	382.1	-242.9
2051	382.1	-224.9
2052	382.1	-206.9
2053	382.1	-188.9
2054	382.1	-170.9
2055	382.1	-152.9
2056	382.1	-134.9
2057	382.1	-116.9
2058	382.1	-98.91
2059	382.1	-83.91
2060	382.1	-71.91
2061	382.1	-55.9
2062	382.1	-41.92
2063	382.1	-27.94
2064	382.1	-13.96
2065	382.1	0.0
2066	382.1	14.19
2067	382.1	23.69
2068	382.1	29.69
2069	382.1	43.75
2070	382.1	54.12
2071	382.1	66.12
2072	382.1	78.12
2073	382.1	90.12
2074	382.1	102.1
2075	382.1	114.1
2076	382.1	126.1
2077	382.1	138.1
2078	382.1	150.1
2079	382.1	162.1
2080	382.1	180.1
2081	382.1	198.1
2082	406.1	-386.9
2083	406.1	-368.9
2084	406.1	-350.9
2085	406.1	-332.9
2086	406.1	-314.9
2087	406.1	-296.9
2088	406.1	-278.9
2089	406.1	-260.9
2090	406.1	-242.9
2091	406.1	-224.9
2092	406.1	-206.9
2093	406.1	-188.9
2094	406.1	-170.9
2095	406.1	-152.9
2096	406.1	-134.9
2097	406.1	-116.9
2098	406.1	-98.91
2099	406.1	-83.91
2100	406.1	-71.91
2101	406.1	-55.9
2102	406.1	-41.92
2103	406.1	-27.94
2104	406.1	-13.96
2105	406.1	0.0
2106	406.1	14.19

N	X	Y
2107	406.1	23.69
2108	406.1	29.69
2109	406.1	43.75
2110	406.1	54.12
2111	406.1	66.12
2112	406.1	78.12
2113	406.1	90.12
2114	406.1	102.1
2115	406.1	114.1
2116	406.1	126.1
2117	406.1	138.1
2118	406.1	150.1
2119	406.1	162.1
2120	406.1	180.1
2121	406.1	198.1
2122	430.1	-386.9
2123	430.1	-368.9
2124	430.1	-350.9
2125	430.1	-332.9
2126	430.1	-314.9
2127	430.1	-296.9
2128	430.1	-278.9
2129	430.1	-260.9
2130	430.1	-242.9
2131	430.1	-224.9
2132	430.1	-206.9
2133	430.1	-188.9
2134	430.1	-170.9
2135	430.1	-152.9
2136	430.1	-134.9
2137	430.1	-116.9
2138	430.1	-98.91
2139	430.1	-83.91
2140	430.1	-71.91
2141	430.1	-55.9
2142	430.1	-41.92
2143	430.1	-27.94
2144	430.1	-13.96
2145	430.1	0.0
2146	430.1	14.19
2147	430.1	23.69
2148	430.1	29.69
2149	430.1	43.75
2150	430.1	54.12
2151	430.1	66.12
2152	430.1	78.12
2153	430.1	90.12
2154	430.1	102.1
2155	430.1	114.1
2156	430.1	126.1
2157	430.1	138.1
2158	430.1	150.1
2159	430.1	162.1
2160	430.1	180.1
2161	430.1	198.1
2162	454.1	-386.9
2163	454.1	-368.9
2164	454.1	-350.9
2165	454.1	-332.9
2166	454.1	-314.9
2167	454.1	-296.9
2168	454.1	-278.9
2169	454.1	-260.9
2170	454.1	-242.9
2171	454.1	-224.9
2172	454.1	-206.9
2173	454.1	-188.9
2174	454.1	-170.9
2175	454.1	-152.9
2176	454.1	-134.9
2177	454.1	-116.9

N	X	Y
2178	454.1	-98.91
2179	454.1	-83.91
2180	454.1	-71.91
2181	454.1	-55.9
2182	454.1	-41.92
2183	454.1	-27.94
2184	454.1	-13.96
2185	454.1	0.0
2186	454.1	14.19
2187	454.1	23.69
2188	454.1	29.69
2189	454.1	43.75
2190	454.1	54.12
2191	454.1	66.12
2192	454.1	78.12
2193	454.1	90.12
2194	454.1	102.1
2195	454.1	114.1
2196	454.1	126.1
2197	454.1	138.1
2198	454.1	150.1
2199	454.1	162.1
2200	454.1	180.1
2201	454.1	198.1
2202	478.1	-386.9
2203	478.1	-368.9
2204	478.1	-350.9
2205	478.1	-332.9
2206	478.1	-314.9
2207	478.1	-296.9
2208	478.1	-278.9
2209	478.1	-260.9
2210	478.1	-242.9
2211	478.1	-224.9
2212	478.1	-206.9
2213	478.1	-188.9
2214	478.1	-170.9
2215	478.1	-152.9
2216	478.1	-134.9
2217	478.1	-116.9
2218	478.1	-98.91
2219	478.1	-83.91
2220	478.1	-71.91
2221	478.1	-55.9
2222	478.1	-41.92
2223	478.1	-27.94
2224	478.1	-13.96
2225	478.1	0.0
2226	478.1	14.19
2227	478.1	23.69
2228	478.1	29.69
2229	478.1	43.75
2230	478.1	54.12
2231	478.1	66.12
2232	478.1	78.12
2233	478.1	90.12
2234	478.1	102.1
2235	478.1	114.1
2236	478.1	126.1
2237	478.1	138.1
2238	478.1	150.1
2239	478.1	162.1
2240	478.1	180.1
2241	478.1	198.1
2242	502.1	-386.9
2243	502.1	-368.9
2244	502.1	-350.9
2245	502.1	-332.9
2246	502.1	-314.9
2247	502.1	-296.9
2248	502.1	-278.9

N	X	Y
2249	502.1	-260.9
2250	502.1	-242.9
2251	502.1	-224.9
2252	502.1	-206.9
2253	502.1	-188.9
2254	502.1	-170.9
2255	502.1	-152.9
2256	502.1	-134.9
2257	502.1	-116.9
2258	502.1	-98.91
2259	502.1	-83.91
2260	502.1	-71.91
2261	502.1	-55.9
2262	502.1	-41.92
2263	502.1	-27.94
2264	502.1	-13.96
2265	502.1	0.0
2266	502.1	14.19
2267	502.1	23.69
2268	502.1	29.69
2269	502.1	43.75
2270	502.1	54.12
2271	502.1	66.12
2272	502.1	78.12
2273	502.1	90.12
2274	502.1	102.1
2275	502.1	114.1
2276	502.1	126.1
2277	502.1	138.1
2278	502.1	150.1
2279	502.1	162.1
2280	502.1	180.1
2281	502.1	198.1
2282	526.1	-386.9
2283	526.1	-368.9
2284	526.1	-350.9
2285	526.1	-332.9
2286	526.1	-314.9
2287	526.1	-296.9
2288	526.1	-278.9
2289	526.1	-260.9
2290	526.1	-242.9
2291	526.1	-224.9
2292	526.1	-206.9
2293	526.1	-188.9
2294	526.1	-170.9
2295	526.1	-152.9
2296	526.1	-134.9
2297	526.1	-116.9
2298	526.1	-98.91
2299	526.1	-83.91
2300	526.1	-71.91
2301	526.1	-55.9
2302	526.1	-41.92
2303	526.1	-27.94
2304	526.1	-13.96
2305	526.1	0.0
2306	526.1	14.19
2307	526.1	23.69
2308	526.1	29.69
2309	526.1	43.75
2310	526.1	54.12
2311	526.1	66.12
2312	526.1	78.12
2313	526.1	90.12
2314	526.1	102.1
2315	526.1	114.1
2316	526.1	126.1
2317	526.1	138.1
2318	526.1	150.1
2319	526.1	162.1

N	X	Y
2320	526.1	180.1
2321	526.1	198.1
2322	550.1	-386.9
2323	550.1	-368.9
2324	550.1	-350.9
2325	550.1	-332.9
2326	550.1	-314.9
2327	550.1	-296.9
2328	550.1	-278.9
2329	550.1	-260.9
2330	550.1	-242.9
2331	550.1	-224.9
2332	550.1	-206.9
2333	550.1	-188.9
2334	550.1	-170.9
2335	550.1	-152.9
2336	550.1	-134.9
2337	550.1	-116.9
2338	550.1	-98.91
2339	550.1	-83.91
2340	550.1	-71.91
2341	550.1	-55.9
2342	550.1	-41.92
2343	550.1	-27.94
2344	550.1	-13.96
2345	550.1	0.0
2346	550.1	14.19
2347	550.1	23.69
2348	550.1	29.69
2349	550.1	43.75
2350	550.1	54.12
2351	550.1	66.12
2352	550.1	78.12
2353	550.1	90.12
2354	550.1	102.1
2355	550.1	114.1
2356	550.1	126.1
2357	550.1	138.1
2358	550.1	150.1
2359	550.1	162.1
2360	550.1	180.1
2361	550.1	198.1
2362	574.1	-386.9
2363	574.1	-368.9
2364	574.1	-350.9
2365	574.1	-332.9
2366	574.1	-314.9
2367	574.1	-296.9
2368	574.1	-278.9
2369	574.1	-260.9
2370	574.1	-242.9
2371	574.1	-224.9
2372	574.1	-206.9
2373	574.1	-188.9
2374	574.1	-170.9
2375	574.1	-152.9
2376	574.1	-134.9
2377	574.1	-116.9
2378	574.1	-98.91
2379	574.1	-83.91
2380	574.1	-71.91
2381	574.1	-55.9
2382	574.1	-41.92
2383	574.1	-27.94
2384	574.1	-13.96
2385	574.1	0.0
2386	574.1	14.19
2387	574.1	23.69
2388	574.1	29.69
2389	574.1	43.75
2390	574.1	54.12

N	X	Y
2391	574.1	66.12
2392	574.1	78.12
2393	574.1	90.12
2394	574.1	102.1
2395	574.1	114.1
2396	574.1	126.1
2397	574.1	138.1
2398	574.1	150.1
2399	574.1	162.1
2400	574.1	180.1
2401	574.1	198.1
2402	598.1	-386.9
2403	598.1	-368.9
2404	598.1	-350.9
2405	598.1	-332.9
2406	598.1	-314.9
2407	598.1	-296.9
2408	598.1	-278.9
2409	598.1	-260.9
2410	598.1	-242.9
2411	598.1	-224.9
2412	598.1	-206.9
2413	598.1	-188.9
2414	598.1	-170.9
2415	598.1	-152.9
2416	598.1	-134.9
2417	598.1	-116.9
2418	598.1	-98.91
2419	598.1	-83.91
2420	598.1	-71.91
2421	598.1	-55.9
2422	598.1	-41.92
2423	598.1	-27.94
2424	598.1	-13.96
2425	598.1	0.0
2426	598.1	14.19
2427	598.1	23.69
2428	598.1	29.69
2429	598.1	43.75
2430	598.1	54.12
2431	598.1	66.12
2432	598.1	78.12
2433	598.1	90.12
2434	598.1	102.1
2435	598.1	114.1
2436	598.1	126.1
2437	598.1	138.1
2438	598.1	150.1
2439	598.1	162.1
2440	598.1	180.1
2441	598.1	198.1
2442	622.1	-386.9
2443	622.1	-368.9
2444	622.1	-350.9
2445	622.1	-332.9
2446	622.1	-314.9
2447	622.1	-296.9
2448	622.1	-278.9
2449	622.1	-260.9
2450	622.1	-242.9
2451	622.1	-224.9
2452	622.1	-206.9
2453	622.1	-188.9
2454	622.1	-170.9
2455	622.1	-152.9
2456	622.1	-134.9
2457	622.1	-116.9
2458	622.1	-98.91
2459	622.1	-83.91
2460	622.1	-71.91
2461	622.1	-55.9

N	X	Y
2462	622.1	-41.92
2463	622.1	-27.94
2464	622.1	-13.96
2465	622.1	0.0
2466	622.1	14.19
2467	622.1	23.69
2468	622.1	29.69
2469	622.1	43.75
2470	622.1	54.12
2471	622.1	66.12
2472	622.1	78.12
2473	622.1	90.12
2474	622.1	102.1
2475	622.1	114.1
2476	622.1	126.1
2477	622.1	138.1
2478	622.1	150.1
2479	622.1	162.1
2480	622.1	180.1
2481	622.1	198.1

A1.5 BOUNDARY CONDITIONS INCLUDING APPLIED LOADING

```
Displacements = in, Rotations = °, Forces = K/ft

     N = Node where the boundary is applied
     I = Construction increment where the boundary appear
  X, Y = X and Y force value (F=value) or displacement value (D=value)
XY, RT = X-Y Rotation and Beam rotational boundary conditions
```

N	I	X	Y	XY	RT
1	1	D =0.0	D =0.0	0.0	F
2	1	D =0.0	F =0.0	0.0	F
3	1	D =0.0	F =0.0	0.0	F
4	1	D =0.0	F =0.0	0.0	F
5	1	D =0.0	F =0.0	0.0	F
6	1	D =0.0	F =0.0	0.0	F
7	1	D =0.0	F =0.0	0.0	F
8	1	D =0.0	F =0.0	0.0	F
9	1	D =0.0	F =0.0	0.0	F
10	1	D =0.0	F =0.0	0.0	F
11	1	D =0.0	F =0.0	0.0	F
12	1	D =0.0	F =0.0	0.0	F
13	1	D =0.0	F =0.0	0.0	F
14	1	D =0.0	F =0.0	0.0	F
15	1	D =0.0	F =0.0	0.0	F
16	1	D =0.0	F =0.0	0.0	F
17	1	D =0.0	F =0.0	0.0	F
18	1	D =0.0	F =0.0	0.0	F
19	1	D =0.0	F =0.0	0.0	F
20	1	D =0.0	F =0.0	0.0	F
21	1	D =0.0	F =0.0	0.0	F
22	1	D =0.0	F =0.0	0.0	F
23	1	D =0.0	F =0.0	0.0	F
24	1	D =0.0	F =0.0	0.0	F
25	1	D =0.0	F =0.0	0.0	F
26	1	D =0.0	F =0.0	0.0	F
27	1	D =0.0	F =0.0	0.0	F
28	1	D =0.0	F =0.0	0.0	F
29	1	D =0.0	F =0.0	0.0	F
30	6	D =0.0	F =0.0	0.0	F
31	7	D =0.0	F =0.0	0.0	F
32	7	D =0.0	F =0.0	0.0	F
33	8	D =0.0	F =0.0	0.0	F
34	8	D =0.0	F =0.0	0.0	F
35	9	D =0.0	F =0.0	0.0	F
36	9	D =0.0	F =0.0	0.0	F
37	10	D =0.0	F =0.0	0.0	F
38	10	D =0.0	F =0.0	0.0	F
39	11	D =0.0	F =0.0	0.0	F
40	11	D =0.0	F =0.0	0.0	F
41	1	D =0.0	D =0.0	0.0	F
81	1	D =0.0	D =0.0	0.0	F
121	1	D =0.0	D =0.0	0.0	F
161	1	D =0.0	D =0.0	0.0	F
201	1	D =0.0	D =0.0	0.0	F
241	1	D =0.0	D =0.0	0.0	F
281	1	D =0.0	D =0.0	0.0	F
321	1	D =0.0	D =0.0	0.0	F
361	1	D =0.0	D =0.0	0.0	F
401	1	D =0.0	D =0.0	0.0	D
441	1	D =0.0	D =0.0	0.0	D
481	1	D =0.0	D =0.0	0.0	D
521	1	D =0.0	D =0.0	0.0	D
561	1	D =0.0	D =0.0	0.0	D
601	1	D =0.0	D =0.0	0.0	D
641	1	D =0.0	D =0.0	0.0	D
681	1	D =0.0	D =0.0	0.0	D
721	1	D =0.0	D =0.0	0.0	D
761	1	D =0.0	D =0.0	0.0	D
801	1	D =0.0	D =0.0	0.0	D

N	I	X	Y	XY	RT
841	1	D =0.0	D =0.0	0.0	D
882	1	D =0.0	D =0.0	0.0	D
922	1	D =0.0	D =0.0	0.0	D
960	1	D =0.0	D =0.0	0.0	D
1013	1	D =0.0	D =0.0	0.0	D
1063	1	D =0.0	D =0.0	0.0	D
1112	1	D =0.0	D =0.0	0.0	D
1145	1	D =0.0	D =0.0	0.0	D
1192	1	D =0.0	D =0.0	0.0	D
1225	1	D =0.0	D =0.0	0.0	D
1272	1	D =0.0	D =0.0	0.0	D
1319	1	D =0.0	D =0.0	0.0	D
1352	1	D =0.0	D =0.0	0.0	D
1401	1	D =0.0	D =0.0	0.0	D
1451	1	D =0.0	D =0.0	0.0	D
1487	1	D =0.0	D =0.0	0.0	D
1524	1	D =0.0	D =0.0	0.0	D
1563	1	D =0.0	D =0.0	0.0	D
1602	1	D =0.0	D =0.0	0.0	D
1642	1	D =0.0	D =0.0	0.0	D
1682	1	D =0.0	D =0.0	0.0	D
1722	1	D =0.0	D =0.0	0.0	D
1762	1	D =0.0	D =0.0	0.0	D
1802	1	D =0.0	D =0.0	0.0	D
1842	1	D =0.0	D =0.0	0.0	D
1882	1	D =0.0	D =0.0	0.0	D
1922	1	D =0.0	D =0.0	0.0	D
1962	1	D =0.0	D =0.0	0.0	D
2002	1	D =0.0	D =0.0	0.0	D
2042	1	D =0.0	D =0.0	0.0	D
2082	1	D =0.0	D =0.0	0.0	F
2122	1	D =0.0	D =0.0	0.0	F
2162	1	D =0.0	D =0.0	0.0	F
2202	1	D =0.0	D =0.0	0.0	F
2242	1	D =0.0	D =0.0	0.0	F
2282	1	D =0.0	D =0.0	0.0	F
2322	1	D =0.0	D =0.0	0.0	F
2362	1	D =0.0	D =0.0	0.0	F
2402	1	D =0.0	D =0.0	0.0	F
2442	1	D =0.0	D =0.0	0.0	F
2443	1	D =0.0	F =0.0	0.0	F
2444	1	D =0.0	F =0.0	0.0	F
2445	1	D =0.0	F =0.0	0.0	F
2446	1	D =0.0	F =0.0	0.0	F
2447	1	D =0.0	F =0.0	0.0	F
2448	1	D =0.0	F =0.0	0.0	F
2449	1	D =0.0	F =0.0	0.0	F
2450	1	D =0.0	F =0.0	0.0	F
2451	1	D =0.0	F =0.0	0.0	F
2452	1	D =0.0	F =0.0	0.0	F
2453	1	D =0.0	F =0.0	0.0	F
2454	1	D =0.0	F =0.0	0.0	F
2455	1	D =0.0	F =0.0	0.0	F
2456	1	D =0.0	F =0.0	0.0	F
2457	1	D =0.0	F =0.0	0.0	F
2458	1	D =0.0	F =0.0	0.0	F
2459	1	D =0.0	F =0.0	0.0	F
2460	1	D =0.0	F =0.0	0.0	F
2461	1	D =0.0	F =0.0	0.0	F
2462	1	D =0.0	F =0.0	0.0	F

N	I	X	Y	XY	RT
2463	1	D =0.0	F =0.0	0.0	F
2464	1	D =0.0	F =0.0	0.0	F
2465	1	D =0.0	F =0.0	0.0	F
2466	1	D =0.0	F =0.0	0.0	F
2467	1	D =0.0	F =0.0	0.0	F
2468	1	D =0.0	F =0.0	0.0	F
2469	1	D =0.0	F =0.0	0.0	F
2470	1	D =0.0	F =0.0	0.0	F
2471	6	D =0.0	F =0.0	0.0	F
2472	7	D =0.0	F =0.0	0.0	F
2473	7	D =0.0	F =0.0	0.0	F
2474	8	D =0.0	F =0.0	0.0	F
2475	8	D =0.0	F =0.0	0.0	F
2476	9	D =0.0	F =0.0	0.0	F
2477	9	D =0.0	F =0.0	0.0	F
2478	10	D =0.0	F =0.0	0.0	F
2479	10	D =0.0	F =0.0	0.0	F
2480	11	D =0.0	F =0.0	0.0	F
2481	11	D =0.0	F =0.0	0.0	F
1012	12	F =0.0	F =-2.4	0.0	F
880	12	F =0.0	F =-2.01	0.0	F
840	12	F =0.0	F =-.09	0.0	F
880	12	F =0.0	F =-.09	0.0	F
880	12	F =0.0	F =-.07	0.0	F
919	12	F =0.0	F =-.07	0.0	F
919	12	F =0.0	F =-.06	0.0	F
958	12	F =0.0	F =-.06	0.0	F
958	12	F =0.0	F =-.04	0.0	F
995	12	F =0.0	F =-.04	0.0	F
995	12	F =0.0	F =-.03	0.0	F
1012	12	F =0.0	F =-.03	0.0	F
1012	12	F =0.0	F =-.04	0.0	F
1046	12	F =0.0	F =-.04	0.0	F
1046	12	F =0.0	F =-.03	0.0	F
1062	12	F =0.0	F =-.03	0.0	F
1062	12	F =0.0	F =-.04	0.0	F
1096	12	F =0.0	F =-.04	0.0	F
1096	12	F =0.0	F =-.04	0.0	F
1111	12	F =0.0	F =-.04	0.0	F
1111	12	F =0.0	F =-.04	0.0	F
1144	12	F =0.0	F =-.04	0.0	F
1144	12	F =0.0	F =-.05	0.0	F
1177	12	F =0.0	F =-.05	0.0	F
1177	12	F =0.0	F =-.05	0.0	F
1191	12	F =0.0	F =-.05	0.0	F
1191	12	F =0.0	F =-.05	0.0	F
1224	12	F =0.0	F =-.05	0.0	F
1224	12	F =0.0	F =-.05	0.0	F
1257	12	F =0.0	F =-.05	0.0	F
1257	12	F =0.0	F =-.05	0.0	F
1271	12	F =0.0	F =-.05	0.0	F
1271	12	F =0.0	F =-.05	0.0	F
1304	12	F =0.0	F =-.05	0.0	F
1304	12	F =0.0	F =-.05	0.0	F
1318	12	F =0.0	F =-.05	0.0	F
1318	12	F =0.0	F =-.05	0.0	F
1351	12	F =0.0	F =-.05	0.0	F
1351	12	F =0.0	F =-.04	0.0	F
1385	12	F =0.0	F =-.04	0.0	F
1385	12	F =0.0	F =-.04	0.0	F
1400	12	F =0.0	F =-.04	0.0	F
1400	12	F =0.0	F =-.04	0.0	F
1433	12	F =0.0	F =-.04	0.0	F
1433	12	F =0.0	F =-.03	0.0	F
1449	12	F =0.0	F =-.03	0.0	F
1449	12	F =0.0	F =-.04	0.0	F
1485	12	F =0.0	F =-.04	0.0	F
1485	12	F =0.0	F =-.03	0.0	F
1522	12	F =0.0	F =-.03	0.0	F
1522	12	F =0.0	F =-.04	0.0	F
1560	12	F =0.0	F =-.04	0.0	F

N	I	X	Y	XY	RT
1560	12	F =0.0	F =-.06	0.0	F
1600	12	F =0.0	F =-.06	0.0	F
1600	12	F =0.0	F =-.07	0.0	F
1641	12	F =0.0	F =-.07	0.0	F
1641	12	F =0.0	F =-.09	0.0	F
1681	12	F =0.0	F =-.09	0.0	F

```
* * * * * * FOR MESH GENERATION OF * * * * * *
 CON/SPAN ARCH CULVERT 20'-0" SPAN

 THE NUMBER OF DATA ERRORS IS-----------    0
 THE NUMBER OF SOIL MATERIALS IS--------    6
 THE NUMBER OF PIPE MATERIALS IS--------   30
 THE NUMBER OF INTERFACE MATERIALS IS---    0
 BAND WIDTH ESTIMATE (MAX)--------------  147

 * * * * * * * MESH DATA HAS BEEN SAVED * * * * * * *
```

A1.6 BEAM ELEMENTS CONNECTIVITY MATRIX

```
NODE-TO-ELEMENT CONNECTIVITY MATRIX FOR BEAMS.
     BEAM-NODE SEQUENCE IS 1 TO NPPT.
     ELEMENTS CONNECTED CLOCKWISE (FORE) AND/OR
     COUNTERCLOCKWISE (BACK) TO A NODE ARE IDENTIFIED
     BY BEAM MATERIAL NUMBER 1 TO NPMAT.
     BEAM-NODE      CONNECTED      CONNECTED
     SEQUENCE       BACK-ELEM.     FORE-ELEM.
         1              0              1
         2              1              2
         3              2              3
         4              3              4
         5              4              5
         6              5              6
         7              6              7
         8              7              8
         9              8              9
        10              9             10
        11             10             11
        12             11             12
        13             12             13
        14             13             14
        15             14             15
        16             15             16
        17             16             17
        18             17             18
        19             18             19
        20             19             20
        21             20             21
        22             21             22
        23             22             23
        24             23             24
        25             24             25
        26             25             26
        27             26             27
        28             27             28
        29             28             29
        30             29             30
        31             30              0
```

A1.7 MATERIAL CHARACTERIZATION FOR SOILS

```
PROPERTIES FOR MATERIAL  1   ********
      DENSITY =                   0.0 PCF
      YOUNGS MODULUS=          3000.0 psi
      POISSONS RATIO=             0.3
      CONFINED MOD.=           4038.0
      LATERAL COEFF.=            0.43

PROPERTIES FOR MATERIAL  2   ********ML95
      DENSITY =                 125.0 PCF
  CONTROLS FOR DUNCAN SUBROUTINE
  WITH SELIG HYPERBOLIC BULK MODULUS FORMULATION
      MAXIMUM ITERATIONS..........        5
      ENTERING ELEMENT RATIO......        .5000
  HYPERBOLIC STRESS-STRAIN PARAMETERS
      SOIL CLASSIFICATION ........       ML95
      COHESION INTERCEPT  C.......          4.0 psi
      FRICTION ANGLE  PHIO (DEG)..      34.0000
      10-FOLD REDUCTION IN PHIO(DEG)      .0000
      SCALED MODULUS NUMBER  ZK ..     440.0000
      MODULUS EXPONENT  ZN .......        .4000
      FAILURE RATIO  RF ..........        .9500
      INIT BULK MODULUS NUMBER BI.     120.8000
      ULT VOLUMETRIC STRAIN EU ...        .0430

PROPERTIES FOR MATERIAL  3   ********
      DENSITY =                 150.0 PCF
      YOUNGS MODULUS=       3605000.0 psi
      POISSONS RATIO=            0.17
      CONFINED MOD.=        3875000.0
      LATERAL COEFF.=             0.2

PROPERTIES FOR MATERIAL  4   ********SM90
      DENSITY =                 170.6 PCF
  CONTROLS FOR DUNCAN SOIL MODEL
      MAXIMUM ITERATIONS...........       5
      ENTERING ELEMENT RATIO.......       .5000
HYPERBOLIC STRESS-STRAIN PARAMETERS
      SOIL CLASSIFICATION ........       SM90
      COHESION INTERCEPT  C.......          0.0 psi
      FRICTION ANGLE  PHIO (DEG)..      32.0000
      10-FOLD REDUCTION IN PHIO(DEG)     4.0000
      SCALED MODULUS NUMBER  ZK ..     300.0000
      MODULUS EXPONENT  ZN .......        .2500
      FAILURE RATIO  RF ..........        .7000
      BULK MODULUS NUMBER  BK ....     250.0000
      BULK MODULUS EXPONENT  BM ..        .0000

PROPERTIES FOR MATERIAL  5   ********
      DENSITY =                   0.0 PCF
      YOUNGS MODULUS=          5000.0 psi
      POISSONS RATIO=             0.3
      CONFINED MOD.=           6731.0
      LATERAL COEFF.=            0.43

PROPERTIES FOR MATERIAL  6   ********
      DENSITY =                   0.0 PCF
      YOUNGS MODULUS=          8000.0 psi
      POISSONS RATIO=             0.3
      CONFINED MOD.=          10770.0
      LATERAL COEFF.=            0.43
```

A2 LOAD INCREMENT 1: DEAD LOAD OF STRUCTURE

A2.1 STRUCTURAL RESPONSE OF BRIDGE

Displacements and Crack depth are in in, Forces are in K/ft, MOMENT are in ft*K/ft

BN(N) = Beam node number (N=Corresponding Node number)
X-D, Y-D = Node displacements
NP, SP = Normal and Shear pressures at the node
MOMENT, SHEAR, THRUST = Values at the node
CD = Crack depth
V@C, T@C = Shear and Thrust values at the center of the element between node BN and node BN+1

BN(N)	X-D	Y-D	NP	SP	MOMENT	THRUST	SHEAR	CD	V@C	T@C
1(859)	0.0	-.1	-.33	0.59	0.0	-1.85	-.19	0.0	-.75	-1.63
2(881)	0.0	-.1	-.36	0.63	0.23	-1.72	-.11	0.0	-.75	-1.48
3(920)	0.0	-.1	-.37	0.65	0.33	-1.6	-.04	0.0	-.75	-1.34
4(921)	0.0	-.1	-.38	0.68	0.34	-1.47	0.03	0.0	-.75	-1.19
5(959)	0.0	-.09	-.39	0.69	0.24	-1.34	0.11	0.0	-.75	-1.03
6(996)	0.0	-.09	-.41	0.72	0.05	-1.2	0.19	0.0	-.75	-.87
7(1032)	0.0	-.09	-.41	0.73	-.26	-1.07	0.26	0.0	-.75	-.74
8(1047)	0.0	-.09	-.48	0.78	-.49	-.99	0.27	0.0	-.75	-.65
9(1048)	0.0	-.09	-.71	0.57	-.63	-.94	0.04	0.0	-.75	-.57
10(1082)	0.0	-.09	-.77	0.32	-.51	-.9	-.19	0.0	-.75	-.47
11(1097)	0.0	-.09	-.72	0.21	-.34	-.84	-.2	0.0	-.75	-.39
12(1131)	0.0	-.09	-.7	0.15	-.19	-.81	-.17	0.0	-.75	-.3
13(1164)	0.0	-.09	-.72	0.12	-.06	-.79	-.13	0.0	-.75	-.22
14(1178)	0.0	-.09	-.72	0.08	0.04	-.77	-.09	0.0	-.75	-.13
15(1211)	0.0	-.09	-.72	0.04	0.09	-.76	-.04	0.0	-.75	-.04
16(1244)	0.0	-.09	-.72	0.0	0.11	-.75	0.0	0.0	-.75	0.04
17(1258)	0.0	-.09	-.73	-.04	0.09	-.76	0.05	0.0	-.75	0.13
18(1291)	0.0	-.09	-.7	-.08	0.03	-.77	0.09	0.0	-.75	0.22
19(1305)	0.0	-.09	-.72	-.12	-.07	-.79	0.13	0.0	-.75	0.31
20(1338)	0.0	-.09	-.71	-.16	-.19	-.81	0.18	0.0	-.75	0.39
21(1371)	0.0	-.09	-.72	-.21	-.35	-.84	0.21	0.0	-.75	0.47
22(1386)	0.0	-.09	-.77	-.32	-.52	-.9	0.18	0.0	-.75	0.57
23(1434)	0.0	-.09	-.7	-.58	-.64	-.94	-.06	0.0	-.75	0.65
24(1435)	0.0	-.09	-.48	-.8	-.5	-.99	-.28	0.0	-.75	0.74
25(1450)	0.0	-.09	-.42	-.73	-.27	-1.07	-.26	0.0	-.75	0.87
26(1486)	0.0	-.09	-.41	-.72	0.04	-1.2	-.19	0.0	-.75	1.04
27(1523)	0.0	-.09	-.39	-.69	0.24	-1.34	-.11	0.0	-.75	1.19
28(1561)	0.0	-.1	-.38	-.67	0.33	-1.47	-.03	0.0	-.75	1.34
29(1562)	0.0	-.1	-.37	-.65	0.33	-1.6	0.04	0.0	-.75	1.48
30(1601)	0.0	-.1	-.36	-.63	0.23	-1.73	0.11	0.0	-.75	1.63
31(1620)	0.0	-.1	-.33	-.59	0.0	-1.86	0.19	0.0		

A2.2 STRESSES IN BRIDGE WALL

Stresses are in psi

BN = Beam node number
FSI, FSO = Stresses in the Inner and Outer steel cages
FC = Concrete compression
FV = Shear stress

BN	FSI	FSO	FC	FV
1	-146.72	-146.75	-19.11	-2.7
2	-38.52	-207.16	-38.39	-1.55
3	10.18	-222.98	-43.81	-.53
4	19.34	-208.34	-40.69	0.41
5	-6.76	-164.78	-30.32	1.3
6	-65.31	-93.99	-13.76	2.16
7	-156.01	2.7	-26.41	2.87
8	-217.05	68.89	-38.75	2.94
9	-201.25	83.04	-34.1	0.39
10	-245.2	89.53	-46.38	-2.31
11	-200.21	46.57	-38.46	-2.79
12	-138.38	-1.83	-24.88	-2.38
13	-84.93	-40.6	-13.29	-1.8
14	-44.02	-71.27	-11.08	-1.21
15	-21.9	-87.48	-15.72	-.58
16	-13.43	-93.72	-17.5	0.02
17	-22.73	-86.84	-15.53	0.62
18	-45.9	-69.8	-10.66	1.25
19	-87.47	-38.63	-13.84	1.82
20	-141.32	0.44	-25.52	2.4
21	-203.46	49.15	-39.18	2.81
22	-248.3	91.91	-47.02	2.26
23	-202.64	84.18	-34.35	-.49
24	-218.96	70.42	-39.13	-3.03
25	-157.88	3.97	-26.78	-2.87
26	-67.08	-92.85	-13.46	-2.17
27	-8.24	-163.92	-30.08	-1.31
28	18.14	-207.73	-40.51	-.42
29	9.37	-222.68	-43.7	0.52
30	-39.05	-207.16	-38.35	1.55
31	-147.06	-147.04	-19.15	2.7

A3 LOAD INCREMENT 2: BACKFILL TO 1/3 OF LEG

A3.1 STRUCTURAL RESPONSE OF BRIDGE

Displacements and Crack depth are in in, Forces are in K/ft, MOMENT are in ft*K/ft

BN(N) = Beam node number (N=Corresponding Node number)
X-D, Y-D = Node displacements
NP, SP = Normal and Shear pressures at the node
MOMENT, SHEAR, THRUST = Values at the node
CD = Crack depth
V@C, T@C = Shear and Thrust values at the center of the element between node BN and node BN+1

BN(N)	X-D	Y-D	NP	SP	MOMENT	THRUST	SHEAR	CD	V@C	T@C
1(859)	0.0	-.11	-1.03	1.12	0.0	-2.08	-.38	0.0	-.74	-1.83
2(881)	0.0	-.11	-1.1	1.2	0.4	-1.83	-.15	0.0	-.81	-1.5
3(920)	0.0	-.11	-.25	0.85	0.45	-1.63	-.01	0.0	-.77	-1.34
4(921)	0.0	-.11	-.38	0.68	0.43	-1.48	0.05	0.0	-.77	-1.19
5(959)	0.0	-.11	-.39	0.69	0.31	-1.35	0.13	0.0	-.77	-1.03
6(996)	0.0	-.11	-.41	0.72	0.09	-1.21	0.2	0.0	-.77	-.87
7(1032)	0.0	-.11	-.41	0.73	-.24	-1.08	0.27	0.0	-.77	-.74
8(1047)	0.0	-.11	-.48	0.78	-.49	-1.0	0.29	0.0	-.77	-.65
9(1048)	0.0	-.11	-.71	0.56	-.64	-.96	0.06	0.0	-.77	-.57
10(1082)	0.0	-.11	-.77	0.32	-.52	-.92	-.18	0.0	-.77	-.47
11(1097)	0.0	-.11	-.72	0.21	-.36	-.86	-.2	0.0	-.77	-.39
12(1131)	0.0	-.11	-.7	0.16	-.2	-.83	-.17	0.0	-.77	-.31
13(1164)	0.0	-.11	-.72	0.12	-.08	-.81	-.13	0.0	-.77	-.22
14(1178)	0.0	-.11	-.72	0.08	0.01	-.79	-.09	0.0	-.77	-.13
15(1211)	0.0	-.11	-.72	0.04	0.07	-.78	-.04	0.0	-.77	-.04
16(1244)	0.0	-.11	-.72	0.0	0.09	-.77	0.0	0.0	-.77	0.04
17(1258)	0.0	-.11	-.73	-.04	0.06	-.78	0.04	0.0	-.77	0.13
18(1291)	0.0	-.11	-.7	-.08	0.01	-.79	0.09	0.0	-.77	0.22
19(1305)	0.0	-.11	-.71	-.12	-.08	-.81	0.13	0.0	-.77	0.3
20(1338)	0.0	-.11	-.71	-.16	-.21	-.83	0.17	0.0	-.77	0.39
21(1371)	0.0	-.11	-.71	-.21	-.36	-.86	0.2	0.0	-.77	0.47
22(1386)	0.0	-.11	-.76	-.32	-.52	-.92	0.17	0.0	-.77	0.57
23(1434)	0.0	-.11	-.7	-.58	-.63	-.96	-.07	0.0	-.77	0.65
24(1435)	0.0	-.11	-.48	-.8	-.48	-1.0	-.3	0.0	-.77	0.74
25(1450)	0.0	-.11	-.42	-.73	-.24	-1.08	-.27	0.0	-.77	0.87
26(1486)	0.0	-.11	-.41	-.72	0.1	-1.21	-.21	0.0	-.77	1.03
27(1523)	0.0	-.11	-.39	-.69	0.32	-1.35	-.13	0.0	-.77	1.19
28(1561)	0.0	-.11	-.38	-.68	0.44	-1.48	-.05	0.0	-.77	1.34
29(1562)	0.0	-.11	-.32	-.97	0.46	-1.64	0.02	0.0	-.81	1.53
30(1601)	0.0	-.11	-1.04	-1.13	0.4	-1.85	0.15	0.0	-.74	1.84
31(1620)	0.0	-.11	-.97	-1.05	0.0	-2.08	0.37	0.0		

A3.2 STRESSES IN BRIDGE WALL

Stresses are in psi

BN = Beam node number
FSI, FSO = Stresses in the Inner and Outer steel cages
FC = Concrete compression
FV = Shear stress

BN	FSI	FSO	FC	FV
1	-164.55	-164.58	-21.44	-5.46
2	23.4	-272.12	-55.43	-2.05
3	53.81	-262.77	-54.28	-.13
4	53.38	-237.97	-48.34	0.64
5	17.1	-186.17	-35.65	1.53
6	-50.81	-107.63	-17.03	2.38
7	-150.2	-3.61	-25.19	3.07
8	-216.0	66.59	-38.49	3.13
9	-202.94	82.94	-34.36	0.5
10	-250.15	91.13	-47.31	-2.22
11	-207.67	49.81	-39.97	-2.73
12	-147.33	2.35	-26.7	-2.33
13	-95.08	-35.49	-15.37	-1.76
14	-54.86	-65.54	-9.24	-1.19
15	-33.11	-81.46	-13.79	-.58
16	-24.55	-87.77	-15.6	0.01
17	-33.45	-81.2	-13.72	0.6
18	-55.76	-64.83	-9.04	1.2
19	-96.06	-34.71	-15.59	1.76
20	-148.11	2.98	-26.87	2.32
21	-208.2	50.26	-40.09	2.72
22	-250.2	91.06	-47.31	2.14
23	-201.76	81.94	-34.15	-.62
24	-214.41	65.34	-38.18	-3.23
25	-148.17	-5.45	-24.78	-3.09
26	-48.08	-110.07	-17.63	-2.39
27	20.71	-189.36	-36.44	-1.54
28	57.91	-241.88	-49.36	-.66
29	58.56	-268.3	-55.65	0.2
30	21.76	-273.0	-55.5	2.13
31	-164.66	-164.65	-21.45	5.36

A4 LOAD INCREMENT 3: BACKFILL TO 2/3 OF LEG

A4.1 STRUCTURAL RESPONSE OF BRIDGE

Displacements and Crack depth are in in, Forces are in K/ft, MOMENT are in ft*K/ft

BN(N) = Beam node number (N=Corresponding Node number)
X-D, Y-D = Node displacements
NP, SP = Normal and Shear pressures at the node
MOMENT, SHEAR, THRUST = Values at the node
CD = Crack depth
V@C, T@C = Shear and Thrust values at the center of the element between node BN and node BN+1

BN(N)	X-D	Y-D	NP	SP	MOMENT	THRUST	SHEAR	CD	V@C	T@C
1(859)	0.0	-.16	-3.02	1.94	0.0	-3.23	-1.34	0.0	-.61	-3.12
2(881)	0.01	-.16	-3.22	2.07	1.55	-2.8	-.67	0.0	-.98	-2.42
3(920)	0.01	-.16	-1.8	2.19	2.0	-2.38	-.16	0.0	-1.08	-1.88
4(921)	0.01	-.16	-1.85	1.73	1.99	-2.0	0.19	0.0	-1.22	-1.42
5(959)	0.01	-.16	-.84	1.55	1.5	-1.68	0.45	0.0	-1.22	-1.07
6(996)	0.01	-.16	-.13	1.1	0.78	-1.42	0.54	0.0	-1.13	-.87
7(1032)	0.0	-.16	-.41	0.73	0.02	-1.26	0.58	0.0	-1.13	-.74
8(1047)	0.0	-.16	-.48	0.78	-.48	-1.19	0.59	0.0	-1.13	-.65
9(1048)	0.0	-.16	-.7	0.57	-.79	-1.22	0.28	0.0	-1.13	-.57
10(1082)	0.0	-.16	-.77	0.32	-.79	-1.24	-.05	0.0	-1.13	-.48
11(1097)	0.0	-.16	-.72	0.21	-.72	-1.21	-.1	0.0	-1.13	-.39
12(1131)	0.0	-.16	-.7	0.16	-.63	-1.18	-.09	0.0	-1.13	-.31
13(1164)	0.0	-.15	-.72	0.12	-.56	-1.16	-.07	0.0	-1.13	-.22
14(1178)	0.0	-.15	-.71	0.08	-.51	-1.14	-.05	0.0	-1.13	-.13
15(1211)	0.0	-.15	-.72	0.04	-.48	-1.13	-.02	0.0	-1.13	-.04
16(1244)	0.0	-.15	-.72	0.0	-.47	-1.13	0.0	0.0	-1.13	0.04
17(1258)	0.0	-.15	-.73	-.04	-.48	-1.13	0.02	0.0	-1.13	0.13
18(1291)	0.0	-.15	-.7	-.08	-.5	-1.14	0.05	0.0	-1.13	0.21
19(1305)	0.0	-.15	-.71	-.12	-.56	-1.16	0.07	0.0	-1.13	0.3
20(1338)	0.0	-.16	-.7	-.16	-.62	-1.18	0.09	0.0	-1.13	0.39
21(1371)	0.0	-.16	-.71	-.21	-.71	-1.21	0.1	0.0	-1.13	0.47
22(1386)	0.0	-.16	-.77	-.32	-.77	-1.24	0.03	0.0	-1.13	0.57
23(1434)	0.0	-.16	-.69	-.56	-.76	-1.21	-.3	0.0	-1.13	0.65
24(1435)	0.0	-.16	-.48	-.8	-.45	-1.18	-.6	0.0	-1.13	0.74
25(1450)	-.01	-.16	-.42	-.73	0.04	-1.26	-.59	0.0	-1.13	0.87
26(1486)	-.01	-.16	-.14	-1.13	0.81	-1.42	-.54	0.0	-1.22	1.08
27(1523)	-.01	-.16	-.85	-1.55	1.52	-1.69	-.45	0.0	-1.22	1.42
28(1561)	-.01	-.16	-1.87	-1.75	2.01	-2.0	-.19	0.0	-1.07	1.89
29(1562)	-.01	-.16	-1.88	-2.32	2.02	-2.4	0.18	0.0	-.98	2.46
30(1601)	-.01	-.16	-3.12	-1.97	1.54	-2.82	0.68	0.0	-.62	3.13
31(1620)	0.0	-.16	-2.92	-1.85	0.0	-3.23	1.33	0.0		

A4.2 STRESSES IN BRIDGE WALL

Stresses are in psi

BN = Beam node number
FSI, FSO = Stresses in the Inner and Outer steel cages
FC = Concrete compression
FV = Shear stress

BN	FSI	FSO	FC	FV
1	-254.66	-254.68	-33.17	-19.46
2	412.02	-718.55	-170.06	-9.31
3	596.71	-807.1	-194.04	-2.17
4	589.46	-749.65	-177.38	2.38
5	409.78	-557.57	-126.87	5.44
6	165.99	-317.42	-67.0	6.33
7	-78.27	-86.33	-11.65	6.56
8	-225.17	52.05	-39.49	6.42
9	-252.53	100.75	-42.69	2.49
10	-368.27	147.98	-70.24	-.55
11	-376.54	140.29	-74.98	-1.4
12	-346.72	111.96	-68.18	-1.29
13	-319.08	93.04	-62.24	-.97
14	-294.57	77.3	-57.03	-.68
15	-283.06	69.38	-54.55	-.33
16	-277.03	65.02	-53.25	-.01
17	-282.52	68.96	-54.44	0.31
18	-293.69	76.62	-56.83	0.66
19	-317.34	91.74	-61.86	0.93
20	-343.75	109.74	-67.53	1.24
21	-372.29	137.0	-74.05	1.34
22	-362.83	143.64	-69.11	0.41
23	-244.78	94.63	-41.3	-2.66
24	-217.19	46.23	-37.95	-6.56
25	-69.57	-93.33	-13.35	-6.59
26	175.83	-325.76	-69.06	-6.34
27	419.87	-566.39	-129.07	-5.44
28	599.73	-758.75	-179.72	-2.36
29	604.3	-815.93	-196.23	2.32
30	409.47	-719.61	-170.1	9.43
31	-254.9	-254.87	-33.2	19.29

A5 LOAD INCREMENT 4: BACKFILL TO HAUNCH

A5.1 STRUCTURAL RESPONSE OF BRIDGE

Displacements and Crack depth are in in, Forces are in K/ft, MOMENT are in ft*K/ft

BN(N) = Beam node number (N=Corresponding Node number)
X-D, Y-D = Node displacements
NP, SP = Normal and Shear pressures at the node
MOMENT, SHEAR, THRUST = Values at the node
CD = Crack depth
V@C, T@C = Shear and Thrust values at the center of the element between node BN and node BN+1

BN(N)	X-D	Y-D	NP	SP	MOMENT	THRUST	SHEAR	CD	V@C	T@C
1(859)	0.0	-.2	-4.64	2.6	0.0	-4.78	-2.4	0.0	-.57	-4.84
2(881)	0.01	-.21	-4.95	2.78	2.9	-4.21	-1.37	0.0	-1.18	-3.83
3(920)	0.02	-.22	-3.48	3.12	4.05	-3.62	-.52	0.0	-1.47	-2.98
4(921)	0.02	-.22	-3.48	2.63	4.3	-3.07	0.15	0.0	-1.81	-2.21
5(959)	0.02	-.22	-2.28	2.49	3.65	-2.57	0.7	0.0	-1.95	-1.57
6(996)	0.02	-.22	-1.17	2.12	2.4	-2.12	1.04	0.0	-1.95	-1.1
7(1032)	0.01	-.21	-1.14	1.49	0.81	-1.8	1.24	0.0	-1.99	-.81
8(1047)	0.01	-.21	-.53	1.49	-.26	-1.66	1.29	0.0	-1.96	-.65
9(1048)	0.01	-.21	-.42	0.97	-.94	-1.8	0.8	0.0	-1.91	-.57
10(1082)	0.0	-.2	-.76	0.32	-1.2	-1.96	0.25	0.0	-1.91	-.48
11(1097)	0.0	-.2	-.73	0.21	-1.33	-1.96	0.11	0.0	-1.91	-.39
12(1131)	0.0	-.2	-.7	0.16	-1.38	-1.94	0.07	0.0	-1.91	-.31
13(1164)	0.0	-.19	-.72	0.12	-1.45	-1.93	0.06	0.0	-1.91	-.22
14(1178)	0.0	-.19	-.72	0.08	-1.48	-1.92	0.04	0.0	-1.91	-.13
15(1211)	0.0	-.19	-.72	0.04	-1.51	-1.91	0.02	0.0	-1.91	-.04
16(1244)	0.0	-.19	-.72	0.0	-1.51	-1.91	0.0	0.0	-1.91	0.04
17(1258)	0.0	-.19	-.72	-.04	-1.51	-1.91	-.02	0.0	-1.91	0.13
18(1291)	0.0	-.19	-.69	-.08	-1.48	-1.92	-.04	0.0	-1.91	0.21
19(1305)	0.0	-.2	-.72	-.12	-1.45	-1.93	-.06	0.0	-1.91	0.3
20(1338)	0.0	-.2	-.7	-.15	-1.38	-1.94	-.08	0.0	-1.91	0.39
21(1371)	0.0	-.2	-.71	-.21	-1.32	-1.95	-.12	0.0	-1.91	0.47
22(1386)	0.0	-.2	-.76	-.32	-1.19	-1.96	-.27	0.0	-1.91	0.56
23(1434)	-.01	-.21	-.41	-1.02	-.89	-1.79	-.83	0.0	-1.96	0.65
24(1435)	-.01	-.21	-.51	-1.46	-.24	-1.65	-1.31	0.0	-1.99	0.8
25(1450)	-.01	-.21	-1.18	-1.55	0.84	-1.8	-1.24	0.0	-1.95	1.1
26(1486)	-.02	-.22	-1.16	-2.1	2.42	-2.12	-1.04	0.0	-1.95	1.57
27(1523)	-.02	-.22	-2.29	-2.48	3.68	-2.57	-.7	0.0	-1.81	2.21
28(1561)	-.02	-.22	-3.5	-2.65	4.32	-3.07	-.15	0.0	-1.47	2.98
29(1562)	-.02	-.22	-3.56	-3.26	4.07	-3.64	0.53	0.0	-1.18	3.87
30(1601)	-.01	-.21	-4.86	-2.68	2.9	-4.23	1.38	0.0	-.58	4.85
31(1620)	0.0	-.2	-4.55	-2.51	0.0	-4.78	2.39	0.0		

A5.2 STRESSES IN BRIDGE WALL

Stresses are in psi

BN = Beam node number
FSI, FSO = Stresses in the Inner and Outer steel cages
FC = Concrete compression
FV = Shear stress

BN	FSI	FSO	FC	FV
1	-376.57	-376.58	-49.05	-34.84
2	851.67	-1266.5	-308.23	-19.02
3	1296.3	-1545.8	-381.34	-6.92
4	1365.5	-1531.3	-371.94	1.88
5	1106.0	-1253.4	-295.56	8.56
6	663.31	-824.29	-186.33	12.15
7	141.58	-338.96	-68.37	13.94
8	-187.77	-35.89	-30.02	13.98
9	-319.76	101.87	-53.35	7.0
10	-563.81	220.1	-107.25	3.12
11	-676.28	281.98	-136.17	1.55
12	-712.16	296.32	-143.36	1.02
13	-739.19	319.42	-149.4	0.78
14	-749.95	334.78	-152.11	0.48
15	-762.1	345.34	-154.83	0.27
16	-762.67	346.06	-154.97	0.0
17	-761.98	345.24	-154.81	-.27
18	-749.73	334.62	-152.06	-.5
19	-738.09	318.63	-149.16	-.82
20	-709.85	294.63	-142.86	-1.06
21	-672.61	279.17	-135.37	-1.61
22	-558.49	216.16	-106.16	-3.32
23	-307.33	92.16	-51.11	-7.25
24	-179.81	-41.19	-28.5	-14.18
25	150.29	-346.15	-70.1	-13.96
26	671.83	-831.56	-188.11	-12.15
27	1115.7	-1261.3	-297.57	-8.57
28	1375.7	-1539.7	-374.15	-1.86
29	1303.9	-1554.1	-383.44	7.06
30	849.52	-1267.4	-308.27	19.14
31	-376.54	-376.53	-49.04	34.68

A6 LOAD INCREMENT 5: BACKFILL TO 1'-0" COVER

A6.1 STRUCTURAL RESPONSE OF BRIDGE

Displacements and Crack depth are in in, Forces are in K/ft, MOMENT are in ft*K/ft

BN(N) = Beam node number (N=Corresponding Node number)
X-D, Y-D = Node displacements
NP, SP = Normal and Shear pressures at the node
MOMENT, SHEAR, THRUST = Values at the node
CD = Crack depth
V@C, T@C = Shear and Thrust values at the center of the element between node BN and node BN+1

BN(N)	X-D	Y-D	NP	SP	MOMENT	THRUST	SHEAR	CD	V@C	T@C
1(859)	-.01	-.26	-6.04	3.08	0.0	-8.19	-3.35	0.0	-1.53	-8.15
2(881)	0.01	-.27	-6.45	3.29	4.12	-7.51	-2.01	0.0	-2.36	-6.9
3(920)	0.03	-.28	-5.09	3.85	5.93	-6.8	-.85	0.0	-2.85	-5.77
4(921)	0.03	-.28	-5.03	3.44	6.41	-6.09	0.12	0.0	-3.36	-4.72
5(959)	0.03	-.28	-3.89	3.37	5.6	-5.44	0.98	0.0	-3.7	-3.78
6(996)	0.03	-.28	-2.86	3.12	3.77	-4.8	1.64	0.0	-3.88	-2.97
7(1032)	0.02	-.28	-2.67	2.7	1.13	-4.29	2.12	0.0	-4.04	-2.39
8(1047)	0.01	-.27	-1.81	2.93	-.74	-4.03	2.25	0.0	-4.04	-2.06
9(1048)	0.01	-.27	-2.1	2.95	-1.94	-4.14	1.21	0.0	-3.95	-1.74
10(1082)	0.0	-.26	-2.94	0.68	-2.1	-4.28	0.09	0.0	-4.01	-1.4
11(1097)	0.0	-.26	-2.57	0.43	-2.06	-4.22	-.09	0.0	-4.04	-1.11
12(1131)	0.0	-.26	-2.26	0.32	-1.96	-4.17	-.07	0.0	-4.06	-.84
13(1164)	0.0	-.25	-2.11	0.27	-1.95	-4.13	-.03	0.0	-4.07	-.59
14(1178)	0.0	-.25	-1.98	0.17	-1.9	-4.1	-.02	0.0	-4.08	-.35
15(1211)	0.0	-.25	-1.92	0.08	-1.91	-4.09	0.0	0.0	-4.08	-.11
16(1244)	0.0	-.25	-1.9	0.0	-1.9	-4.08	0.0	0.0	-4.08	0.11
17(1258)	0.0	-.25	-1.92	-.09	-1.91	-4.09	0.0	0.0	-4.08	0.34
18(1291)	0.0	-.25	-1.96	-.17	-1.9	-4.1	0.02	0.0	-4.07	0.58
19(1305)	0.0	-.25	-2.11	-.26	-1.94	-4.13	0.03	0.0	-4.06	0.84
20(1338)	0.0	-.26	-2.27	-.34	-1.95	-4.17	0.07	0.0	-4.04	1.11
21(1371)	0.0	-.26	-2.53	-.44	-2.05	-4.22	0.09	0.0	-4.01	1.4
22(1386)	0.0	-.26	-2.95	-.68	-2.08	-4.28	-.12	0.0	-3.95	1.74
23(1434)	-.01	-.27	-2.07	-3.02	-1.87	-4.13	-1.27	0.0	-4.05	2.06
24(1435)	-.01	-.27	-1.82	-2.88	-.71	-4.01	-2.29	0.0	-4.04	2.39
25(1450)	-.02	-.28	-2.71	-2.77	1.16	-4.29	-2.12	0.0	-3.89	2.97
26(1486)	-.03	-.28	-2.85	-3.1	3.8	-4.81	-1.64	0.0	-3.7	3.78
27(1523)	-.03	-.28	-3.89	-3.36	5.63	-5.44	-.98	0.0	-3.36	4.72
28(1561)	-.03	-.28	-5.05	-3.45	6.44	-6.09	-.12	0.0	-2.84	5.77
29(1562)	-.03	-.28	-5.16	-4.0	5.95	-6.81	0.86	0.0	-2.36	6.94
30(1601)	-.01	-.27	-6.36	-3.19	4.12	-7.53	2.02	0.0	-1.54	8.16
31(1620)	0.01	-.26	-5.96	-2.99	0.0	-8.19	3.34	0.0		

A6.2 STRESSES IN BRIDGE WALL

Stresses are in psi

BN = Beam node number
FSI, FSO = Stresses in the Inner and Outer steel cages
FC = Concrete compression
FV = Shear stress

BN	FSI	FSO	FC	FV
1	-643.54	-643.54	-83.81	-48.68
2	1096.7	-1916.7	-453.47	-27.92
3	1787.7	-2372.1	-572.43	-11.31
4	1929.2	-2392.2	-568.9	1.52
5	1595.1	-2026.0	-466.94	11.92
6	943.79	-1392.7	-305.42	19.13
7	81.67	-587.87	-110.31	23.8
8	-486.69	-57.54	-79.12	24.45
9	-678.61	185.09	-112.35	10.54
10	-1044.0	326.75	-195.11	1.06
11	-1136.1	348.15	-222.46	-1.25
12	-1116.9	312.51	-217.19	-1.02
13	-1108.5	311.08	-215.61	-.46
14	-1090.0	305.49	-212.0	-.27
15	-1093.0	310.04	-212.76	-.03
16	-1086.8	305.76	-211.43	-.01
17	-1092.4	309.46	-212.62	0.0
18	-1088.8	304.4	-211.73	0.23
19	-1106.0	309.07	-215.07	0.41
20	-1113.6	309.81	-216.47	0.98
21	-1131.9	344.41	-221.5	1.19
22	-1037.6	321.34	-193.76	-1.42
23	-661.66	171.54	-109.3	-11.06
24	-476.41	-64.39	-77.15	-24.85
25	92.16	-596.76	-112.44	-23.82
26	953.88	-1401.5	-307.58	-19.13
27	1606.0	-2035.2	-469.26	-11.92
28	1940.3	-2401.6	-571.35	-1.49
29	1796.0	-2381.2	-574.72	11.46
30	1095.1	-1918.5	-453.72	28.05
31	-643.81	-643.81	-83.85	48.55

A7 LOAD INCREMENT 6: BACKFILL TO 2'-0" COVER

A7.1 STRUCTURAL RESPONSE OF BRIDGE

Displacements and Crack depth are in in, Forces are in K/ft, MOMENT are in ft*K/ft

BN(N) = Beam node number (N=Corresponding Node number)
X-D, Y-D = Node displacements
NP, SP = Normal and Shear pressures at the node
MOMENT, SHEAR, THRUST = Values at the node
CD = Crack depth
V@C, T@C = Shear and Thrust values at the center of the element between node BN and node BN+1

BN(N)	X-D	Y-D	NP	SP	MOMENT	THRUST	SHEAR	CD	V@C	T@C
1(859)	-.01	-.29	-6.73	3.27	0.0	-10.2	-3.79	0.0	-2.19	-10.07
2(881)	0.01	-.31	-7.19	3.49	4.68	-9.48	-2.3	0.0	-3.14	-8.7
3(920)	0.03	-.31	-5.88	4.13	6.77	-8.72	-.99	0.0	-3.73	-7.45
4(921)	0.03	-.32	-5.81	3.74	7.33	-7.96	0.14	0.0	-4.35	-6.27
5(959)	0.03	-.32	-4.7	3.7	6.4	-7.24	1.15	0.0	-4.79	-5.2
6(996)	0.03	-.32	-3.73	3.52	4.22	-6.54	1.97	0.0	-5.09	-4.24
7(1032)	0.02	-.31	-3.48	3.23	1.0	-5.94	2.6	0.0	-5.31	-3.52
8(1047)	0.01	-.31	-2.6	3.6	-1.3	-5.63	2.77	0.0	-5.34	-3.09
9(1048)	0.01	-.3	-3.26	3.92	-2.77	-5.72	1.35	0.0	-5.25	-2.63
10(1082)	0.0	-.3	-4.23	0.97	-2.77	-5.81	-.16	0.0	-5.33	-2.15
11(1097)	0.0	-.29	-3.76	0.66	-2.5	-5.69	-.38	0.0	-5.38	-1.72
12(1131)	0.0	-.29	-3.39	0.52	-2.18	-5.6	-.32	0.0	-5.41	-1.32
13(1164)	0.0	-.29	-3.22	0.43	-2.0	-5.53	-.22	0.0	-5.42	-.93
14(1178)	0.0	-.28	-3.11	0.28	-1.81	-5.47	-.15	0.0	-5.43	-.55
15(1211)	0.0	-.28	-3.06	0.14	-1.75	-5.44	-.06	0.0	-5.43	-.18
16(1244)	0.0	-.28	-3.04	0.0	-1.71	-5.43	0.0	0.0	-5.43	0.18
17(1258)	0.0	-.28	-3.06	-.14	-1.75	-5.44	0.06	0.0	-5.43	0.55
18(1291)	0.0	-.28	-3.09	-.28	-1.81	-5.47	0.14	0.0	-5.42	0.92
19(1305)	0.0	-.29	-3.23	-.43	-1.99	-5.53	0.21	0.0	-5.41	1.32
20(1338)	0.0	-.29	-3.39	-.53	-2.17	-5.6	0.31	0.0	-5.38	1.72
21(1371)	0.0	-.29	-3.72	-.67	-2.49	-5.69	0.37	0.0	-5.34	2.15
22(1386)	0.0	-.3	-4.25	-.98	-2.75	-5.81	0.13	0.0	-5.25	2.64
23(1434)	-.01	-.3	-3.27	-4.03	-2.69	-5.7	-1.42	0.0	-5.35	3.11
24(1435)	-.01	-.31	-2.6	-3.52	-1.27	-5.61	-2.82	0.0	-5.31	3.52
25(1450)	-.02	-.31	-3.51	-3.29	1.04	-5.94	-2.6	0.0	-5.09	4.24
26(1486)	-.03	-.32	-3.73	-3.5	4.26	-6.54	-1.97	0.0	-4.79	5.2
27(1523)	-.03	-.32	-4.7	-3.69	6.43	-7.24	-1.15	0.0	-4.35	6.27
28(1561)	-.03	-.32	-5.83	-3.75	7.36	-7.96	-.14	0.0	-3.73	7.45
29(1562)	-.03	-.31	-5.96	-4.29	6.8	-8.74	1.0	0.0	-3.14	8.74
30(1601)	-.01	-.31	-7.1	-3.4	4.69	-9.5	2.31	0.0	-2.2	10.08
31(1620)	0.01	-.29	-6.65	-3.19	0.0	-10.21	3.78	0.0		

A7.2 STRESSES IN BRIDGE WALL

Stresses are in psi

BN = Beam node number
FSI, FSO = Stresses in the Inner and Outer steel cages
FC = Concrete compression
FV = Shear stress

BN	FSI	FSO	FC	FV
1	-801.6	-801.6	-104.4	-55.08
2	1173.4	-2249.2	-524.46	-31.91
3	1972.0	-2779.8	-663.03	-13.1
4	2135.5	-2806.1	-659.74	1.74
5	1750.8	-2385.2	-542.58	14.0
6	981.77	-1639.0	-352.59	23.06
7	-65.39	-661.75	-116.24	29.21
8	-760.78	-10.67	-126.59	30.08
9	-958.0	274.67	-158.97	11.76
10	-1387.9	419.48	-258.73	-2.02
11	-1420.0	378.95	-275.23	-5.13
12	-1315.7	274.97	-251.18	-4.32
13	-1234.9	220.86	-233.89	-2.95
14	-1158.9	171.37	-217.7	-1.98
15	-1131.2	153.39	-211.8	-.86
16	-1112.4	139.74	-207.71	-.01
17	-1130.7	152.91	-211.68	0.84
18	-1157.9	170.41	-217.47	1.94
19	-1232.5	218.87	-233.35	2.91
20	-1312.4	272.23	-250.45	4.28
21	-1415.7	375.13	-274.25	5.06
22	-1381.3	413.76	-257.36	1.55
23	-939.68	259.81	-155.67	-12.45
24	-750.35	-17.63	-124.59	-30.6
25	-55.02	-670.7	-118.38	-29.23
26	991.81	-1647.9	-354.76	-23.05
27	1761.6	-2394.4	-544.9	-14.0
28	2146.6	-2815.5	-662.2	-1.72
29	1980.3	-2789.0	-665.33	13.24
30	1172.0	-2251.1	-524.75	32.04
31	-801.9	-801.94	-104.45	54.96

A8 LOAD INCREMENT 7: BACKFILL TO 4'-0" COVER

A8.1 STRUCTURAL RESPONSE OF BRIDGE

Displacements and Crack depth are in in, Forces are in K/ft, MOMENT are in ft*K/ft

BN(N) = Beam node number (N=Corresponding Node number)
X-D, Y-D = Node displacements
NP, SP = Normal and Shear pressures at the node
MOMENT, SHEAR, THRUST = Values at the node
CD = Crack depth
V@C, T@C = Shear and Thrust values at the center of the element between node BN and node BN+1

BN(N)	X-D	Y-D	NP	SP	MOMENT	THRUST	SHEAR	CD	V@C	T@C
1(859)	-.01	-.36	-8.05	3.66	0.0	-14.23	-4.59	0.0	-3.59	-13.85
2(881)	0.01	-.37	-8.6	3.91	5.69	-13.42	-2.81	0.0	-4.74	-12.27
3(920)	0.03	-.38	-7.37	4.72	8.26	-12.56	-1.21	0.78	-5.53	-10.78
4(921)	0.04	-.39	-7.19	4.29	8.92	-11.69	0.19	5.31	-6.32	-9.38
5(959)	0.04	-.39	-6.2	4.29	7.74	-10.86	1.49	0.0	-6.96	-8.06
6(996)	0.03	-.39	-5.4	4.2	4.91	-10.03	2.62	0.0	-7.48	-6.82
7(1032)	0.02	-.38	-5.13	4.08	0.58	-9.31	3.53	0.0	-7.86	-5.87
8(1047)	0.01	-.37	-4.36	4.71	-2.58	-8.91	3.78	0.0	-7.98	-5.25
9(1048)	0.01	-.37	-6.08	5.56	-4.57	-8.97	1.6	0.0	-7.94	-4.5
10(1082)	0.0	-.37	-7.07	1.51	-4.24	-8.98	-.69	0.0	-8.08	-3.7
11(1097)	0.0	-.36	-6.36	1.06	-3.49	-8.74	-.95	0.0	-8.17	-2.97
12(1131)	0.0	-.36	-5.84	0.81	-2.74	-8.58	-.79	0.0	-8.22	-2.29
13(1164)	0.0	-.35	-5.58	0.66	-2.23	-8.46	-.56	0.0	-8.26	-1.61
14(1178)	0.0	-.35	-5.42	0.43	-1.79	-8.36	-.37	0.0	-8.28	-.95
15(1211)	0.0	-.35	-5.34	0.22	-1.6	-8.31	-.17	0.0	-8.29	-.31
16(1244)	0.0	-.35	-5.31	0.0	-1.51	-8.29	0.01	0.0	-8.29	0.33
17(1258)	0.0	-.35	-5.34	-.22	-1.62	-8.31	0.19	0.0	-8.28	0.97
18(1291)	0.0	-.35	-5.39	-.42	-1.82	-8.36	0.39	0.0	-8.26	1.62
19(1305)	0.0	-.35	-5.6	-.64	-2.28	-8.46	0.58	0.0	-8.22	2.31
20(1338)	0.0	-.36	-5.84	-.81	-2.8	-8.58	0.81	0.0	-8.17	2.99
21(1371)	0.0	-.36	-6.33	-1.04	-3.57	-8.74	0.97	0.0	-8.08	3.72
22(1386)	-.01	-.37	-7.1	-1.53	-4.33	-8.98	0.66	0.0	-7.93	4.53
23(1434)	-.01	-.37	-6.16	-5.68	-4.62	-8.96	-1.7	0.0	-7.98	5.3
24(1435)	-.01	-.38	-4.35	-4.58	-2.69	-8.91	-3.83	0.0	-7.85	5.89
25(1450)	-.02	-.38	-5.15	-4.13	0.44	-9.32	-3.5	0.0	-7.46	6.85
26(1486)	-.04	-.39	-5.36	-4.18	4.74	-10.05	-2.6	0.0	-6.95	8.09
27(1523)	-.05	-.39	-6.13	-4.28	7.54	-10.88	-1.47	0.0	-6.33	9.39
28(1561)	-.05	-.4	-7.05	-4.31	8.72	-11.7	-.2	5.28	-5.55	10.78
29(1562)	-.04	-.39	-7.24	-4.89	8.09	-12.59	1.17	4.84	-4.8	12.29
30(1601)	-.02	-.38	-8.46	-3.87	5.58	-13.46	2.75	0.0	-3.67	13.85
31(1620)	0.02	-.36	-7.92	-3.62	0.0	-14.26	4.5	0.0		

A8.2 STRESSES IN BRIDGE WALL

Stresses are in psi

BN = Beam node number
FSI, FSO = Stresses in the Inner and Outer steel cages
FC = Concrete compression
FV = Shear stress

BN	FSI	FSO	FC	FV
1	-1117.3	-1117.3	-145.51	-66.71
2	1280.9	-2876.4	-655.85	-38.96
3	2879.2	-3626.1	-884.32	-15.99
4	24762.0	-1439.1	-1747.8	2.47
5	1971.4	-3028.9	-674.88	18.08
6	978.46	-2068.2	-431.1	30.59
7	-421.16	-763.87	-116.76	39.66
8	-1362.0	118.67	-231.67	41.05
9	-1555.7	478.18	-259.06	14.0
10	-2127.0	633.82	-396.14	-8.42
11	-2040.9	468.17	-391.72	-12.98
12	-1768.7	226.91	-330.51	-10.77
13	-1551.1	72.12	-283.47	-7.63
14	-1370.2	-58.32	-244.29	-5.05
15	-1290.5	-114.77	-227.08	-2.25
16	-1251.9	-143.08	-218.7	0.14
17	-1297.6	-109.24	-228.63	2.54
18	-1384.6	-46.98	-247.45	5.32
19	-1571.7	88.28	-288.01	7.89
20	-1796.4	248.58	-336.58	11.04
21	-2073.4	494.41	-398.91	13.23
22	-2160.6	661.17	-403.15	8.06
23	-1566.4	488.5	-261.03	-14.81
24	-1396.7	149.35	-238.58	-41.53
25	-465.14	-728.1	-108.08	-39.37
26	919.63	-2020.5	-419.23	-30.32
27	1900.7	-2971.4	-660.21	-17.93
28	24013.0	-1460.3	-1707.2	-2.58
29	20535.0	-1924.7	-1673.4	15.54
30	1231.4	-2842.6	-645.81	38.12
31	-1120.1	-1120.2	-145.9	65.42

A9 LOAD INCREMENT 8: BACKFILL TO 6'-0" COVER

A9.1 STRUCTURAL RESPONSE OF BRIDGE

Displacements and Crack depth are in in, Forces are in K/ft, MOMENT are in ft*K/ft

BN(N) = Beam node number (N=Corresponding Node number)
X-D, Y-D = Node displacements
NP, SP = Normal and Shear pressures at the node
MOMENT, SHEAR, THRUST = Values at the node
CD = Crack depth
V@C, T@C = Shear and Thrust values at the center of the element between node BN and node BN+1

BN(N)	X-D	Y-D	NP	SP	MOMENT	THRUST	SHEAR	CD	V@C	T@C
1(859)	-.02	-.42	-9.29	4.07	0.0	-18.32	-5.28	0.0	-5.1	-17.65
2(881)	0.02	-.44	-9.92	4.35	6.54	-17.42	-3.22	0.0	-6.45	-15.85
3(920)	0.04	-.46	-8.67	5.36	9.48	-16.45	-1.36	4.84	-7.39	-14.13
4(921)	0.05	-.47	-8.38	4.86	10.18	-15.47	0.28	5.37	-8.33	-12.52
5(959)	0.05	-.46	-7.58	4.84	8.73	-14.53	1.82	0.0	-9.15	-10.98
6(996)	0.04	-.46	-6.98	4.81	5.27	-13.59	3.24	0.0	-9.88	-9.48
7(1032)	0.02	-.45	-6.72	4.77	-.14	-12.75	4.42	0.0	-10.42	-8.31
8(1047)	0.01	-.45	-6.2	5.74	-4.11	-12.3	4.75	0.0	-10.65	-7.52
9(1048)	0.01	-.44	-9.06	6.91	-6.61	-12.32	1.8	0.0	-10.68	-6.47
10(1082)	0.01	-.43	-9.99	2.02	-5.89	-12.24	-1.29	0.0	-10.9	-5.35
11(1097)	0.0	-.43	-9.11	1.41	-4.59	-11.88	-1.6	0.0	-11.03	-4.31
12(1131)	0.0	-.42	-8.48	1.03	-3.36	-11.65	-1.32	0.0	-11.13	-3.32
13(1164)	0.0	-.42	-8.14	0.78	-2.48	-11.48	-.94	0.0	-11.2	-2.33
14(1178)	0.0	-.42	-7.86	0.5	-1.76	-11.36	-.62	0.0	-11.24	-1.38
15(1211)	0.0	-.42	-7.73	0.26	-1.43	-11.29	-.29	0.0	-11.26	-.45
16(1244)	0.0	-.42	-7.67	0.0	-1.28	-11.27	0.01	0.0	-11.26	0.47
17(1258)	0.0	-.42	-7.74	-.25	-1.45	-11.29	0.31	0.0	-11.24	1.4
18(1291)	0.0	-.42	-7.84	-.49	-1.79	-11.36	0.64	0.0	-11.19	2.35
19(1305)	0.0	-.42	-8.15	-.77	-2.52	-11.49	0.96	0.0	-11.12	3.34
20(1338)	0.0	-.42	-8.47	-1.02	-3.42	-11.65	1.34	0.0	-11.03	4.33
21(1371)	0.0	-.43	-9.07	-1.39	-4.67	-11.88	1.62	0.0	-10.89	5.36
22(1386)	-.01	-.44	-10.02	-2.08	-5.97	-12.25	1.24	0.0	-10.66	6.51
23(1434)	-.01	-.44	-9.19	-7.08	-6.64	-12.32	-1.94	0.0	-10.64	7.58
24(1435)	-.02	-.45	-6.15	-5.53	-4.21	-12.28	-4.82	0.0	-10.41	8.33
25(1450)	-.03	-.45	-6.74	-4.82	-.26	-12.77	-4.4	0.0	-9.86	9.51
26(1486)	-.04	-.46	-6.94	-4.8	5.1	-13.61	-3.22	0.0	-9.14	11.0
27(1523)	-.06	-.47	-7.51	-4.83	8.54	-14.55	-1.81	0.0	-8.33	12.53
28(1561)	-.06	-.47	-8.24	-4.86	9.98	-15.48	-.29	5.35	-7.41	14.13
29(1562)	-.05	-.46	-8.54	-5.52	9.31	-16.48	1.33	5.17	-6.51	15.87
30(1601)	-.02	-.45	-9.78	-4.3	6.43	-17.46	3.16	0.0	-5.18	17.64
31(1620)	0.02	-.42	-9.16	-4.03	0.0	-18.35	5.19	0.0		

A9.2 STRESSES IN BRIDGE WALL

Stresses are in psi

BN = Beam node number
FSI, FSO = Stresses in the Inner and Outer steel cages
FC = Concrete compression
FV = Shear stress

BN	FSI	FSO	FC	FV
1	-1438.5	-1438.5	-187.35	-76.72
2	1320.0	-3457.1	-773.4	-44.71
3	22250.0	-2566.2	-1906.2	-18.01
4	28657.0	-1995.4	-2085.3	3.57
5	2065.3	-3572.7	-781.47	22.14
6	859.4	-2407.0	-486.89	37.86
7	-875.25	-791.76	-117.2	49.7
8	-2048.5	310.17	-353.28	51.58
9	-2213.9	725.87	-369.91	15.74
10	-2936.7	895.42	-547.81	-15.76
11	-2715.0	588.7	-519.41	-21.83
12	-2255.1	192.76	-416.55	-18.04
13	-1884.0	-77.02	-336.05	-12.87
14	-1587.3	-298.31	-271.42	-8.5
15	-1448.9	-399.7	-241.35	-3.89
16	-1385.6	-446.98	-227.56	0.13
17	-1455.5	-394.49	-242.81	4.16
18	-1600.8	-287.63	-274.4	8.75
19	-1903.2	-61.89	-340.29	13.12
20	-2280.9	213.04	-422.22	18.28
21	-2745.0	613.07	-526.03	22.04
22	-2967.6	920.18	-554.24	15.15
23	-2220.4	732.39	-371.12	-16.93
24	-2079.8	338.35	-359.53	-52.33
25	-915.76	-758.79	-125.29	-49.41
26	804.2	-2362.2	-475.75	-37.58
27	1998.3	-3518.1	-767.54	-21.98
28	27937.0	-2015.5	-2046.3	-3.66
29	27398.0	-1487.2	-2023.4	17.59
30	1272.0	-3423.6	-763.53	43.9
31	-1440.7	-1440.8	-187.65	75.45

A10 LOAD INCREMENT 9: BACKFILL TO 8'-0" COVER

A10.1 STRUCTURAL RESPONSE OF BRIDGE

Displacements and Crack depth are in in, Forces are in K/ft, MOMENT are in ft*K/ft

BN(N) = Beam node number (N=Corresponding Node number)
X-D, Y-D = Node displacements
NP, SP = Normal and Shear pressures at the node
MOMENT, SHEAR, THRUST = Values at the node
CD = Crack depth
V@C, T@C = Shear and Thrust values at the center of the element between node BN and node BN+1

BN(N)	X-D	Y-D	NP	SP	MOMENT	THRUST	SHEAR	CD	V@C	T@C
1(859)	-.03	-.48	-10.53	4.47	0.0	-22.49	-5.96	0.0	-6.66	-21.5
2(881)	0.02	-.51	-11.24	4.78	7.37	-21.5	-3.62	0.0	-8.2	-19.49
3(920)	0.05	-.53	-9.95	5.99	10.67	-20.43	-1.5	5.14	-9.3	-17.54
4(921)	0.07	-.54	-9.58	5.45	11.39	-19.32	0.38	5.41	-10.39	-15.72
5(959)	0.06	-.54	-8.93	5.41	9.65	-18.27	2.17	0.63	-11.38	-13.96
6(996)	0.05	-.53	-8.54	5.4	5.54	-17.22	3.87	0.0	-12.32	-12.21
7(1032)	0.03	-.52	-8.25	5.37	-.94	-16.28	5.32	0.0	-13.03	-10.83
8(1047)	0.02	-.52	-8.06	6.7	-5.72	-15.77	5.72	0.0	-13.36	-9.87
9(1048)	0.01	-.51	-12.16	8.2	-8.73	-15.77	1.97	0.0	-13.48	-8.52
10(1082)	0.01	-.5	-13.01	2.53	-7.58	-15.59	-1.93	0.0	-13.77	-7.07
11(1097)	0.0	-.5	-11.96	1.76	-5.71	-15.11	-2.29	0.0	-13.96	-5.71
12(1131)	0.0	-.49	-11.21	1.26	-3.96	-14.8	-1.89	0.0	-14.09	-4.4
13(1164)	0.0	-.49	-10.79	0.95	-2.69	-14.58	-1.36	0.0	-14.2	-3.09
14(1178)	0.0	-.49	-10.4	0.6	-1.67	-14.42	-.9	0.0	-14.26	-1.83
15(1211)	0.0	-.49	-10.23	0.31	-1.19	-14.34	-.42	0.0	-14.29	-.6
16(1244)	0.0	-.49	-10.16	0.0	-.97	-14.3	0.01	0.0	-14.29	0.62
17(1258)	0.0	-.49	-10.24	-.3	-1.2	-14.34	0.43	0.0	-14.26	1.85
18(1291)	0.0	-.49	-10.38	-.59	-1.69	-14.42	0.91	0.0	-14.2	3.1
19(1305)	0.0	-.49	-10.78	-.93	-2.73	-14.58	1.37	0.0	-14.09	4.42
20(1338)	0.0	-.49	-11.19	-1.26	-4.01	-14.8	1.9	0.0	-13.95	5.72
21(1371)	-.01	-.5	-11.93	-1.74	-5.77	-15.1	2.3	0.0	-13.76	7.08
22(1386)	-.01	-.51	-13.04	-2.63	-7.65	-15.6	1.86	0.0	-13.46	8.56
23(1434)	-.01	-.52	-12.37	-8.44	-8.73	-15.76	-2.16	0.0	-13.35	9.94
24(1435)	-.02	-.52	-7.95	-6.4	-5.8	-15.76	-5.81	0.0	-13.02	10.85
25(1450)	-.03	-.53	-8.28	-5.41	-1.04	-16.29	-5.3	0.0	-12.31	12.23
26(1486)	-.05	-.54	-8.51	-5.38	5.41	-17.23	-3.85	0.0	-11.37	13.98
27(1523)	-.07	-.54	-8.87	-5.39	9.49	-18.29	-2.15	0.0	-10.39	15.73
28(1561)	-.07	-.55	-9.46	-5.44	11.22	-19.33	-.38	5.39	-9.32	17.54
29(1562)	-.06	-.54	-9.85	-6.15	10.52	-20.45	1.47	5.21	-8.25	19.5
30(1601)	-.02	-.52	-11.1	-4.72	7.27	-21.53	3.57	0.0	-6.73	21.49
31(1620)	0.03	-.49	-10.39	-4.42	0.0	-22.51	5.88	0.0		

A10.2 STRESSES IN BRIDGE WALL

Stresses are in psi

BN = Beam node number
FSI, FSO = Stresses in the Inner and Outer steel cages
FC = Concrete compression
FV = Shear stress

BN	FSI	FSO	FC	FV
1	-1765.3	-1765.3	-229.92	-86.53
2	1345.2	-4036.9	-889.86	-50.28
3	28909.0	-2159.3	-2249.2	-19.88
4	32355.0	-2569.7	-2414.6	4.82
5	2741.2	-4208.8	-937.9	26.34
6	708.95	-2728.3	-537.8	45.22
7	-1362.9	-801.0	-199.08	59.76
8	-2767.2	518.33	-480.86	62.06
9	-2895.9	985.5	-484.86	17.26
10	-3769.5	1165.6	-703.87	-23.62
11	-3400.6	707.69	-649.07	-31.24
12	-2741.1	148.0	-501.99	-25.77
13	-2205.6	-244.61	-385.67	-18.49
14	-1784.7	-563.09	-293.75	-12.21
15	-1582.2	-713.13	-249.67	-5.68
16	-1491.9	-780.96	-229.99	0.11
17	-1587.8	-708.66	-250.92	5.9
18	-1796.4	-553.85	-296.32	12.43
19	-2222.2	-231.56	-389.32	18.69
20	-2762.7	165.07	-506.74	25.95
21	-3425.1	727.81	-654.5	31.38
22	-3794.8	1185.2	-709.11	22.75
23	-2895.9	986.06	-484.88	-18.84
24	-2791.3	540.65	-485.7	-63.11
25	-1395.0	-775.11	-205.48	-59.51
26	664.1	-2692.1	-528.79	-44.97
27	2075.0	-4056.4	-872.13	-26.17
28	31746.0	-2586.2	-2381.4	-4.87
29	31263.0	-2037.0	-2374.6	19.54
30	1302.8	-4006.6	-880.99	49.58
31	-1766.5	-1766.7	-230.1	85.37

A11 LOAD INCREMENT 10: BACKFILL TO 10'-0" COVER

A11.1 STRUCTURAL RESPONSE OF BRIDGE

Displacements and Crack depth are in in, Forces are in K/ft, MOMENT are in ft*K/ft

BN(N) = Beam node number (N=Corresponding Node number)
X-D, Y-D = Node displacements
NP, SP = Normal and Shear pressures at the node
MOMENT, SHEAR, THRUST = Values at the node
CD = Crack depth
V@C, T@C = Shear and Thrust values at the center of the element between node BN and node BN+1

BN(N)	X-D	Y-D	NP	SP	MOMENT	THRUST	SHEAR	CD	V@C	T@C
1(859)	-.03	-.55	-11.76	4.86	0.0	-26.73	-6.62	0.0	-8.26	-25.42
2(881)	0.02	-.58	-12.56	5.19	8.19	-25.65	-4.02	0.0	-10.0	-23.2
3(920)	0.06	-.61	-11.23	6.62	11.83	-24.48	-1.63	5.17	-11.26	-21.02
4(921)	0.08	-.62	-10.79	6.03	12.57	-23.26	0.48	5.43	-12.49	-18.99
5(959)	0.07	-.61	-10.3	5.99	10.53	-22.1	2.52	0.77	-13.66	-16.99
6(996)	0.05	-.61	-10.11	6.0	5.77	-20.93	4.51	0.0	-14.81	-14.99
7(1032)	0.03	-.59	-9.77	5.95	-1.81	-19.89	6.22	0.0	-15.68	-13.42
8(1047)	0.02	-.59	-9.93	7.65	-7.4	-19.32	6.69	0.0	-16.11	-12.28
9(1048)	0.01	-.58	-15.31	9.46	-10.92	-19.28	2.13	0.0	-16.32	-10.63
10(1082)	0.01	-.57	-16.09	3.06	-9.32	-19.0	-2.61	0.0	-16.69	-8.84
11(1097)	0.0	-.56	-14.89	2.13	-6.85	-18.39	-3.02	0.0	-16.93	-7.15
12(1131)	0.0	-.56	-14.03	1.51	-4.56	-18.0	-2.49	0.0	-17.11	-5.52
13(1164)	0.0	-.56	-13.51	1.12	-2.87	-17.74	-1.79	0.0	-17.25	-3.87
14(1178)	0.0	-.56	-13.03	0.71	-1.53	-17.54	-1.18	0.0	-17.34	-2.3
15(1211)	0.0	-.56	-12.81	0.37	-.88	-17.43	-.55	0.0	-17.38	-.76
16(1244)	0.0	-.56	-12.74	0.0	-.6	-17.39	0.01	0.0	-17.38	0.77
17(1258)	0.0	-.56	-12.82	-.36	-.9	-17.43	0.57	0.0	-17.34	2.31
18(1291)	0.0	-.56	-13.01	-.71	-1.56	-17.54	1.2	0.0	-17.25	3.89
19(1305)	0.0	-.56	-13.5	-1.1	-2.91	-17.74	1.8	0.0	-17.11	5.53
20(1338)	0.0	-.56	-14.0	-1.5	-4.61	-18.0	2.5	0.0	-16.93	7.16
21(1371)	-.01	-.57	-14.87	-2.1	-6.91	-18.39	3.03	0.0	-16.69	8.85
22(1386)	-.01	-.58	-16.11	-3.19	-9.39	-19.02	2.51	0.0	-16.31	10.68
23(1434)	-.01	-.59	-15.52	-9.67	-10.91	-19.27	-2.36	0.0	-16.1	12.35
24(1435)	-.02	-.59	-9.81	-7.34	-7.48	-19.3	-6.81	0.0	-15.66	13.43
25(1450)	-.04	-.6	-9.79	-5.98	-1.9	-19.89	-6.2	0.0	-14.79	15.01
26(1486)	-.06	-.61	-10.08	-5.99	5.65	-20.93	-4.49	0.0	-13.64	17.01
27(1523)	-.08	-.62	-10.24	-5.96	10.38	-22.1	-2.51	0.71	-12.49	18.99
28(1561)	-.09	-.62	-10.68	-6.02	12.41	-23.26	-.49	5.42	-11.27	21.01
29(1562)	-.07	-.61	-11.13	-6.77	11.69	-24.49	1.61	5.24	-10.04	23.2
30(1601)	-.03	-.59	-12.42	-5.13	8.09	-25.67	3.97	0.0	-8.33	25.4
31(1620)	0.04	-.55	-11.63	-4.8	0.0	-26.74	6.55	0.0		

A11.2 STRESSES IN BRIDGE WALL

Stresses are in psi

BN = Beam node number
FSI, FSO = Stresses in the Inner and Outer steel cages
FC = Concrete compression
FV = Shear stress

BN	FSI	FSO	FC	FV
1	-2098.0	-2098.0	-273.24	-96.26
2	1360.6	-4619.5	-1006.2	-55.76
3	32645.0	-2760.8	-2544.1	-21.67
4	36088.0	-3245.5	-2614.3	6.15
5	2833.0	-4755.3	-1044.9	30.64
6	537.23	-3041.1	-586.03	52.7
7	-1875.4	-798.2	-285.6	69.92
8	-3511.8	739.62	-613.25	72.59
9	-3598.3	1255.7	-603.33	18.64
10	-4623.2	1444.5	-863.93	-31.91
11	-4097.3	827.2	-780.76	-41.11
12	-3227.7	95.7	-587.16	-33.89
13	-2519.1	-426.28	-433.12	-24.4
14	-1967.3	-847.13	-312.43	-16.12
15	-1696.8	-1048.6	-253.53	-7.55
16	-1578.7	-1137.6	-227.75	0.11
17	-1702.6	-1044.0	-254.81	7.78
18	-1979.1	-837.75	-315.03	16.34
19	-2535.6	-413.24	-436.74	24.59
20	-3248.8	112.52	-591.82	34.05
21	-4120.7	846.62	-785.96	41.23
22	-4647.6	1463.0	-868.96	30.8
23	-3595.4	1254.0	-602.83	-20.62
24	-3533.3	760.82	-617.61	-73.92
25	-1905.1	-773.73	-291.54	-69.67
26	495.52	-3006.8	-577.52	-52.45
27	2759.4	-4693.4	-1029.2	-30.47
28	35490.0	-3249.3	-2599.2	-6.18
29	35097.0	-2681.2	-2604.4	21.36
30	1320.0	-4589.4	-997.48	55.09
31	-2098.4	-2098.5	-273.32	95.12

A12 LOAD INCREMENT 11: BACKFILL TO 13'-0" COVER

A12.1 STRUCTURAL RESPONSE OF BRIDGE

Displacements and Crack depth are in in, Forces are in K/ft, MOMENT are in ft*K/ft

BN(N) = Beam node number (N=Corresponding Node number)
X-D, Y-D = Node displacements
NP, SP = Normal and Shear pressures at the node
MOMENT, SHEAR, THRUST = Values at the node
CD = Crack depth
V@C, T@C = Shear and Thrust values at the center of the element between node BN and node BN+1

BN(N)	X-D	Y-D	NP	SP	MOMENT	THRUST	SHEAR	CD	V@C	T@C
1(859)	-.04	-.65	-13.62	5.44	0.0	-33.21	-7.58	0.0	-10.76	-31.37
2(881)	0.03	-.69	-14.54	5.81	9.35	-32.0	-4.57	0.0	-12.8	-28.84
3(920)	0.08	-.72	-13.08	7.57	13.45	-30.67	-1.8	5.19	-14.27	-26.33
4(921)	0.1	-.73	-12.47	6.9	14.18	-29.28	0.66	5.44	-15.71	-23.99
5(959)	0.09	-.73	-12.22	6.87	11.69	-27.95	3.04	4.18	-17.11	-21.66
6(996)	0.07	-.72	-12.37	6.95	5.97	-26.6	5.44	0.0	-18.55	-19.28
7(1032)	0.04	-.7	-12.08	6.85	-3.19	-25.4	7.54	0.0	-19.67	-17.41
8(1047)	0.02	-.69	-12.76	9.15	-9.98	-24.75	8.1	0.0	-20.27	-16.0
9(1048)	0.01	-.69	-20.03	11.34	-14.23	-24.64	2.31	0.0	-20.62	-13.9
10(1082)	0.01	-.68	-20.88	3.84	-11.91	-24.18	-3.7	5.72	-21.11	-11.59
11(1097)	0.0	-.67	-19.47	2.68	-8.46	-23.37	-4.17	0.47	-21.43	-9.38
12(1131)	0.0	-.66	-18.4	1.89	-5.32	-22.86	-3.43	0.0	-21.68	-7.24
13(1164)	0.0	-.66	-17.73	1.4	-2.97	-22.52	-2.48	0.0	-21.87	-5.08
14(1178)	0.0	-.66	-17.09	0.89	-1.13	-22.26	-1.64	0.0	-21.99	-3.02
15(1211)	0.0	-.66	-16.82	0.46	-.23	-22.11	-.77	0.0	-22.04	-.99
16(1244)	0.0	-.66	-16.7	0.0	0.16	-22.06	0.01	0.0	-22.04	1.01
17(1258)	0.0	-.66	-16.83	-.45	-.24	-22.11	0.79	0.0	-21.99	3.03
18(1291)	0.0	-.66	-17.08	-.89	-1.16	-22.26	1.65	0.0	-21.87	5.1
19(1305)	0.0	-.66	-17.72	-1.38	-3.02	-22.52	2.49	0.0	-21.68	7.25
20(1338)	0.0	-.67	-18.35	-1.88	-5.37	-22.86	3.44	0.0	-21.43	9.38
21(1371)	-.01	-.67	-19.46	-2.64	-8.52	-23.37	4.18	0.49	-21.1	11.59
22(1386)	-.01	-.68	-20.88	-4.02	-11.97	-24.21	3.58	5.73	-20.6	13.96
23(1434)	-.02	-.69	-20.29	-11.49	-14.21	-24.63	-2.6	0.0	-20.24	16.08
24(1435)	-.03	-.7	-12.54	-8.75	-10.06	-24.71	-8.26	0.0	-19.65	17.41
25(1450)	-.04	-.71	-12.09	-6.86	-3.28	-25.39	-7.52	0.0	-18.53	19.29
26(1486)	-.07	-.72	-12.35	-6.94	5.85	-26.59	-5.42	0.0	-17.09	21.67
27(1523)	-.1	-.74	-12.16	-6.83	11.55	-27.94	-3.03	4.15	-15.69	23.98
28(1561)	-.11	-.74	-12.37	-6.89	14.02	-29.26	-.66	5.43	-14.27	26.31
29(1562)	-.09	-.73	-12.99	-7.71	13.32	-30.67	1.78	5.24	-12.83	28.83
30(1601)	-.03	-.69	-14.4	-5.74	9.25	-32.01	4.52	0.0	-10.81	31.34
31(1620)	0.05	-.65	-13.48	-5.37	0.0	-33.2	7.51	0.0		

A12.2 STRESSES IN BRIDGE WALL

Stresses are in psi

BN = Beam node number
FSI, FSO = Stresses in the Inner and Outer steel cages
FC = Concrete compression
FV = Shear stress

BN	FSI	FSO	FC	FV
1	-2605.9	-2606.0	-339.4	-110.21
2	1348.0	-5480.1	-1175.6	-63.38
3	37947.0	-3824.2	-2777.5	-23.86
4	41105.0	-4329.1	-2831.6	8.35
5	14437.0	-5616.3	-1856.0	36.97
6	224.85	-3477.7	-649.49	63.55
7	-2678.9	-777.18	-421.89	84.73
8	-4652.8	1080.6	-816.19	87.96
9	-4664.3	1664.1	-783.08	20.17
10	-6311.0	32139.0	-2481.0	-45.29
11	-5275.7	1472.0	-1025.7	-56.81
12	-3907.9	-28.52	-703.65	-46.76
13	-2924.6	-755.8	-489.74	-33.75
14	-2166.2	-1338.9	-323.63	-22.3
15	-1788.0	-1622.0	-241.21	-10.51
16	-1626.3	-1744.2	-234.93	0.11
17	-1794.0	-1617.3	-242.51	10.74
18	-2178.2	-1329.3	-326.28	22.53
19	-2941.7	-742.22	-493.51	33.96
20	-3929.8	-10.97	-708.49	46.91
21	-5300.7	1496.9	-1031.5	56.92
22	-6331.0	32418.0	-2496.5	43.84
23	-4659.0	1660.5	-782.15	-22.73
24	-4672.6	1102.1	-820.27	-89.71
25	-2706.6	-752.86	-427.51	-84.5
26	185.93	-3444.1	-641.27	-63.32
27	14105.0	-5560.9	-1827.1	-36.82
28	40539.0	-4330.0	-2817.2	-8.39
29	40429.0	-3741.1	-2838.4	23.58
30	1310.0	-5449.9	-1167.1	62.75
31	-2604.9	-2605.1	-339.29	109.1

A13 LOAD INCREMENT 12: APPLY LIVE LOAD

A13.1 STRUCTURAL RESPONSE OF BRIDGE

Displacements and Crack depth are in in, Forces are in K/ft, MOMENT are in ft*K/ft

BN(N) = Beam node number (N=Corresponding Node number)
X-D, Y-D = Node displacements
NP, SP = Normal and Shear pressures at the node
MOMENT, SHEAR, THRUST = Values at the node
CD = Crack depth
V@C, T@C = Shear and Thrust values at the center of the element between node BN and node BN+1

BN(N)	X-D	Y-D	NP	SP	MOMENT	THRUST	SHEAR	CD	V@C	T@C
1(859)	-.05	-.67	-13.98	5.7	0.0	-35.67	-7.82	0.0	-11.79	-33.58
2(881)	0.04	-.72	-14.92	6.09	9.64	-34.41	-4.72	0.0	-13.87	-30.96
3(920)	0.09	-.76	-13.45	8.22	13.9	-32.98	-1.88	5.18	-15.34	-28.3
4(921)	0.12	-.78	-12.64	7.56	14.68	-31.46	0.63	5.43	-16.74	-25.84
5(959)	0.11	-.77	-12.38	7.55	12.21	-30.0	3.05	4.23	-18.11	-23.39
6(996)	0.09	-.76	-12.53	7.7	6.46	-28.52	5.48	0.0	-19.51	-20.86
7(1032)	0.07	-.75	-12.16	7.55	-2.77	-27.19	7.59	0.0	-20.58	-18.88
8(1047)	0.05	-.74	-13.2	10.38	-9.61	-26.42	8.11	0.0	-21.15	-17.35
9(1048)	0.04	-.74	-21.94	13.37	-13.84	-26.07	1.99	0.0	-21.47	-15.0
10(1082)	0.03	-.72	-23.07	4.91	-11.08	-25.34	-4.26	5.57	-21.94	-12.41
11(1097)	0.03	-.72	-21.52	3.3	-7.21	-24.37	-4.61	-.24	-22.26	-9.96
12(1131)	0.03	-.71	-20.35	2.11	-3.78	-23.79	-3.71	0.0	-22.53	-7.59
13(1164)	0.03	-.71	-19.55	1.3	-1.29	-23.43	-2.58	0.0	-22.77	-5.22
14(1178)	0.03	-.7	-18.75	0.53	0.58	-23.19	-1.58	0.0	-22.95	-2.96
15(1211)	0.03	-.7	-18.36	-.11	1.36	-23.11	-.57	0.0	-23.09	-.76
16(1244)	0.03	-.7	-18.16	-.71	1.53	-23.15	0.33	0.0	-23.18	1.42
17(1258)	0.03	-.69	-18.22	-1.27	0.81	-23.32	1.22	0.0	-23.21	3.62
18(1291)	0.03	-.69	-18.45	-1.73	-.5	-23.58	2.18	0.0	-23.17	5.85
19(1305)	0.03	-.68	-19.11	-2.26	-2.85	-23.98	3.11	0.0	-23.06	8.19
20(1338)	0.03	-.68	-19.8	-2.7	-5.76	-24.46	4.15	0.0	-22.87	10.51
21(1371)	0.02	-.68	-21.03	-3.43	-9.49	-25.11	4.95	4.7	-22.58	12.92
22(1386)	0.02	-.68	-22.34	-4.76	-13.58	-26.13	4.3	5.87	-22.08	15.48
23(1434)	0.02	-.7	-21.46	-12.46	-16.32	-26.74	-2.44	0.65	-21.73	17.74
24(1435)	0.01	-.7	-12.97	-9.13	-11.99	-26.91	-8.65	0.51	-21.12	19.11
25(1450)	-.01	-.71	-12.49	-7.08	-4.87	-27.62	-7.92	0.0	-19.97	21.05
26(1486)	-.04	-.73	-12.8	-7.12	4.78	-28.85	-5.76	0.0	-18.47	23.51
27(1523)	-.07	-.74	-12.62	-6.95	10.87	-30.23	-3.27	3.91	-17.0	25.88
28(1561)	-.08	-.75	-12.74	-6.96	13.62	-31.57	-.83	5.35	-15.53	28.26
29(1562)	-.07	-.74	-13.23	-7.75	13.09	-32.99	1.67	5.18	-14.04	30.81
30(1601)	-.02	-.71	-14.44	-5.63	9.14	-34.32	4.44	0.0	-12.01	33.3
31(1620)	0.05	-.67	-13.52	-5.27	0.0	-35.48	7.44	0.0		

A13.2 STRESSES IN BRIDGE WALL

Stresses are in psi

BN = Beam node number
FSI, FSO = Stresses in the Inner and Outer steel cages
FC = Concrete compression
FV = Shear stress

BN	FSI	FSO	FC	FV
1	-2799.1	-2799.1	-364.55	-113.58
2	1285.2	-5759.4	-1226.6	-65.51
3	39300.0	-4232.8	-2848.6	-24.9
4	42630.0	-4724.2	-2903.1	8.02
5	15278.0	-5999.3	-1974.5	37.04
6	261.17	-3745.4	-700.49	63.98
7	-2661.0	-1008.1	-410.02	85.35
8	-4644.1	875.74	-807.23	88.11
9	-4649.9	1506.1	-776.43	17.43
10	-6297.8	28177.0	-2307.8	-52.13
11	-4829.3	913.97	-917.19	-62.88
12	-3352.1	-591.66	-575.1	-50.51
13	-2305.6	-1366.6	-347.4	-35.12
14	-1542.8	-1966.9	-284.1	-21.51
15	-1216.7	-2217.2	-354.68	-7.79
16	-1150.4	-2275.6	-370.51	4.49
17	-1456.8	-2053.4	-306.74	16.57
18	-2011.9	-1645.9	-280.4	29.73
19	-2984.5	-907.63	-492.93	42.34
20	-4207.7	-9.63	-758.69	56.51
21	-5940.8	19576.0	-2054.3	67.45
22	-7278.0	39823.0	-2706.9	52.67
23	-5478.1	2570.3	-936.8	-21.34
24	-5591.7	2007.8	-1006.9	-93.89
25	-3362.7	-461.65	-549.32	-89.06
26	-324.25	-3292.0	-586.3	-67.23
27	12432.0	-5644.8	-1748.9	-39.81
28	38663.0	-4776.1	-2790.1	-10.5
29	39069.0	-4201.1	-2839.6	22.15
30	1087.4	-5587.2	-1179.2	61.64
31	-2784.3	-2784.4	-362.65	108.06

PART B: CONTROLLING CASE FOR MAXIMUM NEGATIVE MOMENT

The following is a formated version of the CANDE output file case2.PRT

B1 INPUT DATUM

This file's input datum is the same than for A1 INPUT DATUM starting on page 4.
Only the boundary conditions are different as they are listed below.

B1.1 BOUNDARY CONDITIONS INCLUDING APPLIED LOADING

```
Displacements = in, Rotations = °, Forces = K/ft

     N = Node where the boundary is applied
     I = Construction increment where the boundary appear
  X, Y = X and Y force value (F=value) or displacement value (D=value)
XY, RT = X-Y Rotation and Beam rotational boundary conditions
```

N	I	X	Y	XY	RT
1	1	D =0.0	D =0.0	0.0	F
2	1	D =0.0	F =0.0	0.0	F
3	1	D =0.0	F =0.0	0.0	F
4	1	D =0.0	F =0.0	0.0	F
5	1	D =0.0	F =0.0	0.0	F
6	1	D =0.0	F =0.0	0.0	F
7	1	D =0.0	F =0.0	0.0	F
8	1	D =0.0	F =0.0	0.0	F
9	1	D =0.0	F =0.0	0.0	F
10	1	D =0.0	F =0.0	0.0	F
11	1	D =0.0	F =0.0	0.0	F
12	1	D =0.0	F =0.0	0.0	F
13	1	D =0.0	F =0.0	0.0	F
14	1	D =0.0	F =0.0	0.0	F
15	1	D =0.0	F =0.0	0.0	F
16	1	D =0.0	F =0.0	0.0	F
17	1	D =0.0	F =0.0	0.0	F
18	1	D =0.0	F =0.0	0.0	F
19	1	D =0.0	F =0.0	0.0	F
20	1	D =0.0	F =0.0	0.0	F
21	1	D =0.0	F =0.0	0.0	F
22	1	D =0.0	F =0.0	0.0	F
23	1	D =0.0	F =0.0	0.0	F
24	1	D =0.0	F =0.0	0.0	F
25	1	D =0.0	F =0.0	0.0	F
26	1	D =0.0	F =0.0	0.0	F
27	1	D =0.0	F =0.0	0.0	F
28	1	D =0.0	F =0.0	0.0	F
29	1	D =0.0	F =0.0	0.0	F
30	6	D =0.0	F =0.0	0.0	F
31	15	D =0.0	F =0.0	0.0	F
32	15	D =0.0	F =0.0	0.0	F
33	15	D =0.0	F =0.0	0.0	F
34	15	D =0.0	F =0.0	0.0	F
35	15	D =0.0	F =0.0	0.0	F
36	15	D =0.0	F =0.0	0.0	F
37	15	D =0.0	F =0.0	0.0	F
38	15	D =0.0	F =0.0	0.0	F
39	15	D =0.0	F =0.0	0.0	F
40	15	D =0.0	F =0.0	0.0	F
41	1	D =0.0	D =0.0	0.0	F
81	1	D =0.0	D =0.0	0.0	F
121	1	D =0.0	D =0.0	0.0	F
161	1	D =0.0	D =0.0	0.0	F
201	1	D =0.0	D =0.0	0.0	F
241	1	D =0.0	D =0.0	0.0	F
281	1	D =0.0	D =0.0	0.0	F
321	1	D =0.0	D =0.0	0.0	F
361	1	D =0.0	D =0.0	0.0	F
401	1	D =0.0	D =0.0	0.0	D
441	1	D =0.0	D =0.0	0.0	D
481	1	D =0.0	D =0.0	0.0	D
521	1	D =0.0	D =0.0	0.0	D
561	1	D =0.0	D =0.0	0.0	D
601	1	D =0.0	D =0.0	0.0	D
641	1	D =0.0	D =0.0	0.0	D
681	1	D =0.0	D =0.0	0.0	D
721	1	D =0.0	D =0.0	0.0	D
761	1	D =0.0	D =0.0	0.0	D
801	1	D =0.0	D =0.0	0.0	D

N	I	X	Y	XY	RT
841	1	D =0.0	D =0.0	0.0	D
882	1	D =0.0	D =0.0	0.0	D
922	1	D =0.0	D =0.0	0.0	D
960	1	D =0.0	D =0.0	0.0	D
1013	1	D =0.0	D =0.0	0.0	D
1063	1	D =0.0	D =0.0	0.0	D
1112	1	D =0.0	D =0.0	0.0	D
1145	1	D =0.0	D =0.0	0.0	D
1192	1	D =0.0	D =0.0	0.0	D
1225	1	D =0.0	D =0.0	0.0	D
1272	1	D =0.0	D =0.0	0.0	D
1319	1	D =0.0	D =0.0	0.0	D
1352	1	D =0.0	D =0.0	0.0	D
1401	1	D =0.0	D =0.0	0.0	D
1451	1	D =0.0	D =0.0	0.0	D
1487	1	D =0.0	D =0.0	0.0	D
1524	1	D =0.0	D =0.0	0.0	D
1563	1	D =0.0	D =0.0	0.0	D
1602	1	D =0.0	D =0.0	0.0	D
1642	1	D =0.0	D =0.0	0.0	D
1682	1	D =0.0	D =0.0	0.0	D
1722	1	D =0.0	D =0.0	0.0	D
1762	1	D =0.0	D =0.0	0.0	D
1802	1	D =0.0	D =0.0	0.0	D
1842	1	D =0.0	D =0.0	0.0	D
1882	1	D =0.0	D =0.0	0.0	D
1922	1	D =0.0	D =0.0	0.0	D
1962	1	D =0.0	D =0.0	0.0	D
2002	1	D =0.0	D =0.0	0.0	D
2042	1	D =0.0	D =0.0	0.0	D
2082	1	D =0.0	D =0.0	0.0	F
2122	1	D =0.0	D =0.0	0.0	F
2162	1	D =0.0	D =0.0	0.0	F
2202	1	D =0.0	D =0.0	0.0	F
2242	1	D =0.0	D =0.0	0.0	F
2282	1	D =0.0	D =0.0	0.0	F
2322	1	D =0.0	D =0.0	0.0	F
2362	1	D =0.0	D =0.0	0.0	F
2402	1	D =0.0	D =0.0	0.0	F
2442	1	D =0.0	D =0.0	0.0	F
2443	1	D =0.0	F =0.0	0.0	F
2444	1	D =0.0	F =0.0	0.0	F
2445	1	D =0.0	F =0.0	0.0	F
2446	1	D =0.0	F =0.0	0.0	F
2447	1	D =0.0	F =0.0	0.0	F
2448	1	D =0.0	F =0.0	0.0	F
2449	1	D =0.0	F =0.0	0.0	F
2450	1	D =0.0	F =0.0	0.0	F
2451	1	D =0.0	F =0.0	0.0	F
2452	1	D =0.0	F =0.0	0.0	F
2453	1	D =0.0	F =0.0	0.0	F
2454	1	D =0.0	F =0.0	0.0	F
2455	1	D =0.0	F =0.0	0.0	F
2456	1	D =0.0	F =0.0	0.0	F
2457	1	D =0.0	F =0.0	0.0	F
2458	1	D =0.0	F =0.0	0.0	F
2459	1	D =0.0	F =0.0	0.0	F
2460	1	D =0.0	F =0.0	0.0	F
2461	1	D =0.0	F =0.0	0.0	F
2462	1	D =0.0	F =0.0	0.0	F

N	I	X	Y	XY	RT
2463	1	D =0.0	F =0.0	0.0	F
2464	1	D =0.0	F =0.0	0.0	F
2465	1	D =0.0	F =0.0	0.0	F
2466	1	D =0.0	F =0.0	0.0	F
2467	1	D =0.0	F =0.0	0.0	F
2468	1	D =0.0	F =0.0	0.0	F
2469	1	D =0.0	F =0.0	0.0	F
2470	1	D =0.0	F =0.0	0.0	F
2471	6	D =0.0	F =0.0	0.0	F
2472	15	D =0.0	F =0.0	0.0	F
2473	15	D =0.0	F =0.0	0.0	F
2474	15	D =0.0	F =0.0	0.0	F
2475	15	D =0.0	F =0.0	0.0	F
2476	15	D =0.0	F =0.0	0.0	F
2477	15	D =0.0	F =0.0	0.0	F
2478	15	D =0.0	F =0.0	0.0	F
2479	15	D =0.0	F =0.0	0.0	F
2480	15	D =0.0	F =0.0	0.0	F
2481	15	D =0.0	F =0.0	0.0	F
1375	7	F =0.0	F =-6.18	0.0	F
1247	7	F =0.0	F =-6.3	0.0	F
830	7	F =0.0	F =-.09	0.0	F
870	7	F =0.0	F =-.09	0.0	F
870	7	F =0.0	F =-.07	0.0	F
909	7	F =0.0	F =-.07	0.0	F
909	7	F =0.0	F =-.06	0.0	F
948	7	F =0.0	F =-.06	0.0	F
948	7	F =0.0	F =-.04	0.0	F
985	7	F =0.0	F =-.04	0.0	F
985	7	F =0.0	F =-.03	0.0	F
1002	7	F =0.0	F =-.03	0.0	F
1002	7	F =0.0	F =-.04	0.0	F
1036	7	F =0.0	F =-.04	0.0	F
1036	7	F =0.0	F =-.03	0.0	F
1052	7	F =0.0	F =-.03	0.0	F
1052	7	F =0.0	F =-.04	0.0	F
1086	7	F =0.0	F =-.04	0.0	F
1086	7	F =0.0	F =-.04	0.0	F
1101	7	F =0.0	F =-.04	0.0	F
1101	7	F =0.0	F =-.04	0.0	F
1134	7	F =0.0	F =-.04	0.0	F
1134	7	F =0.0	F =-.05	0.0	F
1167	7	F =0.0	F =-.05	0.0	F
1167	7	F =0.0	F =-.05	0.0	F
1181	7	F =0.0	F =-.05	0.0	F
1181	7	F =0.0	F =-.05	0.0	F
1214	7	F =0.0	F =-.05	0.0	F
1214	7	F =0.0	F =-.05	0.0	F
1247	7	F =0.0	F =-.05	0.0	F
1247	7	F =0.0	F =-.05	0.0	F
1261	7	F =0.0	F =-.05	0.0	F
1261	7	F =0.0	F =-.05	0.0	F
1294	7	F =0.0	F =-.05	0.0	F
1294	7	F =0.0	F =-.05	0.0	F
1308	7	F =0.0	F =-.05	0.0	F
1308	7	F =0.0	F =-.05	0.0	F
1341	7	F =0.0	F =-.05	0.0	F
1341	7	F =0.0	F =-.04	0.0	F
1375	7	F =0.0	F =-.04	0.0	F
1375	7	F =0.0	F =-.04	0.0	F
1390	7	F =0.0	F =-.04	0.0	F
1390	7	F =0.0	F =-.04	0.0	F
1423	7	F =0.0	F =-.04	0.0	F
1423	7	F =0.0	F =-.03	0.0	F
1439	7	F =0.0	F =-.03	0.0	F
1439	7	F =0.0	F =-.04	0.0	F
1475	7	F =0.0	F =-.04	0.0	F
1475	7	F =0.0	F =-.03	0.0	F
1512	7	F =0.0	F =-.03	0.0	F
1512	7	F =0.0	F =-.04	0.0	F
1550	7	F =0.0	F =-.04	0.0	F

N	I	X	Y	XY	RT
1550	7	F =0.0	F =-.06	0.0	F
1590	7	F =0.0	F =-.06	0.0	F
1590	7	F =0.0	F =-.07	0.0	F
1631	7	F =0.0	F =-.07	0.0	F
1631	7	F =0.0	F =-.09	0.0	F
1671	7	F =0.0	F =-.09	0.0	F

B2 RESULTS FOR LOAD INCREMENT 1 TO 6

The results for the Load Increment 1 to Load Increment 6 are simmilar to the related chapter starting at A2 LOAD INCREMENT 1: Dead Load of Structure on page 37.

B3 LOAD INCREMENT 7: APPLY LIVE LOAD

B3.1 STRUCTURAL RESPONSE OF BRIDGE

Displacements and Crack depth are in in, Forces are in K/ft, MOMENT are in ft*K/ft

BN(N) = Beam node number (N=Corresponding Node number)
X-D, Y-D = Node displacements
NP, SP = Normal and Shear pressures at the node
MOMENT, SHEAR, THRUST = Values at the node
CD = Crack depth
V@C, T@C = Shear and Thrust values at the center of the element between node BN and node BN+1

BN(N)	X-D	Y-D	NP	SP	MOMENT	THRUST	SHEAR	CD	V@C	T@C
1(859)	-.01	-.34	-6.72	2.73	0.0	-17.08	-3.13	0.0	-6.18	-15.77
2(881)	-.01	-.34	-7.18	2.91	3.67	-16.47	-1.64	0.0	-7.18	-14.51
3(920)	-.03	-.33	-6.37	3.75	4.87	-15.81	-.28	0.0	-7.89	-13.28
4(921)	-.04	-.33	-6.86	3.36	4.42	-15.12	0.99	0.0	-8.73	-12.07
5(959)	-.06	-.31	-6.14	3.39	2.21	-14.47	2.25	0.0	-9.44	-10.91
6(996)	-.08	-.3	-5.59	3.24	-1.63	-13.82	3.39	0.0	-10.08	-9.81
7(1032)	-.1	-.29	-5.56	3.04	-7.06	-13.28	4.34	0.0	-10.6	-8.97
8(1047)	-.11	-.29	-4.7	3.47	-10.89	-13.05	4.48	6.62	-10.82	-8.44
9(1048)	-.12	-.28	-5.58	4.2	-13.18	-13.12	1.06	0.0	-10.84	-7.8
10(1082)	-.12	-.28	-6.81	1.42	-11.64	-12.92	-2.63	6.47	-10.98	-7.03
11(1097)	-.11	-.29	-5.63	1.91	-9.08	-12.4	-3.39	5.85	-10.95	-6.36
12(1131)	-.11	-.32	-4.18	2.19	-6.3	-11.95	-3.58	0.0	-10.81	-5.83
13(1164)	-.1	-.36	-4.19	4.46	-3.28	-11.35	-3.7	0.0	-10.36	-5.23
14(1178)	-.1	-.4	-7.33	5.68	-.05	-10.53	-3.63	0.0	-9.77	-4.28
15(1211)	-.09	-.44	-14.89	7.3	2.8	-9.58	-2.82	0.0	-9.0	-2.44
16(1244)	-.09	-.47	-18.75	1.33	4.66	-8.94	-1.32	4.6	-8.84	-.19
17(1258)	-.09	-.49	-13.83	-4.56	4.99	-9.11	0.14	4.71	-9.29	1.5
18(1291)	-.09	-.5	-8.95	-.52	4.43	-9.44	1.02	4.48	-9.24	2.58
19(1305)	-.09	-.49	-12.5	-1.9	3.28	-9.67	1.78	0.0	-9.21	4.12
20(1338)	-.09	-.47	-16.73	-1.5	1.42	-9.99	2.99	0.0	-8.96	6.06
21(1371)	-.09	-.46	-15.97	-6.84	-1.48	-10.71	4.22	0.0	-9.2	8.02
22(1386)	-.08	-.45	-11.66	-6.98	-5.27	-12.02	4.4	0.0	-9.42	9.55
23(1434)	-.08	-.44	-5.11	-13.82	-8.46	-13.63	0.78	0.0	-10.11	10.72
24(1435)	-.07	-.44	-.93	-5.77	-7.13	-14.7	-2.98	0.0	-10.32	11.24
25(1450)	-.07	-.43	-2.3	-5.13	-4.41	-15.27	-3.23	0.0	-10.4	12.11
26(1486)	-.06	-.42	-3.57	-4.64	-.16	-16.12	-2.74	0.0	-10.24	13.25
27(1523)	-.05	-.42	-4.94	-4.44	3.07	-17.01	-1.91	0.0	-9.83	14.48
28(1561)	-.04	-.41	-6.16	-4.31	4.99	-17.86	-.84	0.0	-9.21	15.78
29(1562)	-.02	-.4	-6.51	-4.72	5.32	-18.72	0.38	0.0	-8.57	17.19
30(1601)	0.0	-.39	-7.58	-3.69	3.97	-19.56	1.79	0.0	-7.58	18.63
31(1620)	0.03	-.37	-7.09	-3.45	0.0	-20.33	3.36	0.0		

B3.2 STRESSES IN BRIDGE WALL

Stresses are in psi

BN = Beam node number
FSI, FSO = Stresses in the Inner and Outer steel cages
FC = Concrete compression
FV = Shear stress

BN	FSI	FSO	FC	FV
1	-1340.6	-1340.6	-174.6	-45.45
2	231.06	-2448.0	-500.05	-22.74
3	716.47	-2699.7	-567.99	-3.73
4	553.63	-2428.2	-493.81	12.59
5	-220.0	-1650.8	-295.23	27.31
6	-1475.3	-461.61	-233.13	39.61
7	-3133.7	1071.4	-569.55	48.81
8	-5131.7	35892.0	-2172.5	48.61
9	-3801.4	2060.5	-657.76	9.22
10	-2635.1	53449.0	-2613.4	-32.16
11	-1641.9	45193.0	-2527.7	-46.16
12	-3479.4	1116.2	-683.78	-48.85
13	-2202.5	191.53	-407.0	-50.38
14	-828.56	-791.04	-109.79	-49.41
15	405.91	-1647.8	-349.93	-38.39
16	15837.0	-845.2	-1209.2	-17.94
17	17362.0	-814.62	-1303.8	1.86
18	14656.0	-971.66	-1156.2	13.86
19	604.92	-1790.1	-390.94	24.19
20	-180.63	-1215.0	-226.4	40.79
21	-1393.6	-324.19	-235.17	57.57
22	-2703.8	728.48	-500.24	53.9
23	-2718.6	1043.1	-458.46	6.82
24	-3135.7	961.49	-558.6	-32.35
25	-2413.8	216.88	-415.35	-36.32
26	-1134.2	-1034.2	-151.76	-31.99
27	-93.22	-2078.8	-382.09	-23.21
28	566.91	-2794.9	-564.21	-10.65
29	675.49	-3055.9	-634.36	5.03
30	117.45	-2780.3	-558.12	24.87
31	-1595.6	-1595.7	-207.82	48.88

CONTECH BRIDGE SOLUTIONS INC.

DETACHED HEADWALL CALCULATIONS - LRFD METHOD

JOB #: 468920
NAME: US ROUTE 2
DATE: 12/9/2015
BY: KDK

This spreadsheet checks hardware and reinforcing used for detached headwalls.

125 per geotechnical report

VARIABLE	DESCRIPTION OF VARIABLE	VALUE
MATERIALS		
γ_s	unit weight of backfill (pcf)	120
ϕ_f	friction angle of soil	32
k_o	active earth pressure coefficient	0.32
f'_c	compressive strength of concrete (psi)	5000
f'_{c2}	compressive strength of Arch Unit concrete (psi)	5000
fy	reinforcing steel yield stress (psi)	60000
STRUCTURE		
	culvert span / form system	36A
H_{center}	headwall height @ center	1.25
H_{cr}	headwall height @ critical section (feet)	10.75
H_{soil}	soil height @ critical section (feet)	10.75
t	headwall thickness (inches)	10
t_{cul}	culvert slab thickness (inches)	8
L_{col}	collar length beyond headwall (inches)	20
t_{col}	collar thickness (inches)	10
e	distance from front headwall face to insert (inches)	21
LOADS		
H_s	surcharge height (feet)	0
Pi	horizontal impact load applied to guardrail or headwall (kips)	0
y	distance from top of soil to centroid of horizontal load (feet)	0
L_d	distribution width @ critical section (feet)	8.00
DESIGN		
HW f'c	Headwall Compresive Strength = 5000 psi	
Spacing	EC inserts spaced at 1.5 ft.	
Headwall Ties	#5 headwall ties spaced at 10"o.c	
Hook Bars	#5 hooked bars in unit spaced at 6"o.c	
Collar Ties	#5 collar ties spaced at 10"o.c	
Inserts	F-56 Inserts	

NOTES:

1. Moments are summed at the lower outside corner of the headwall for overturning calculations.
2. Headwall heights are measured from the top of the CON/SPAN unit to the top of the headwall.
3. Live load surcharge is applied per AASHTO 3.11.6.4
4. Railing impact loads are applied per AASHTO Section 13.
5. Critical headwall height is the average height in the distribution width closest to the outside edge of the headwall.
7. The active earth pressure coefficient, K, is calculated using the AASHTO equation found in 3.11.5.3.

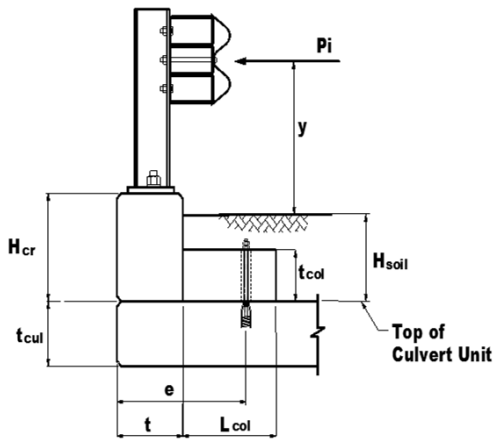

Headwall Detail: Impact with Guardrail
NOT USED IN THIS PROJECT

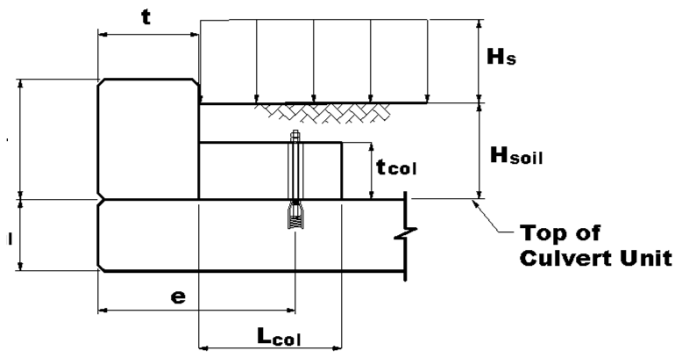

Headwall Detail: NO Impact and NO Guardrail
USED IN THIS PROJECT

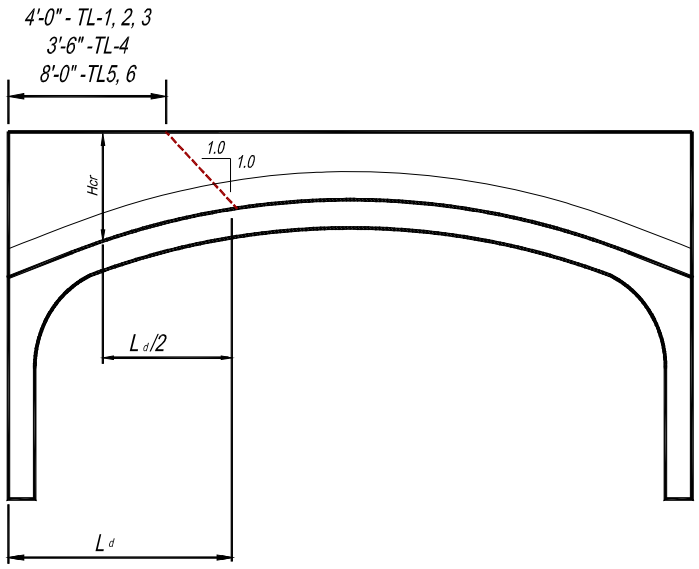

End Unit Elevation

Service I Load Combination

Service I: 1.00DC + 1.00EH + 1.00EV + 1.00LS

Coil Rod & Insert Tensile Capacity (Service)

Calculate Overturning Moment

Soil:	**Surcharge:**	**Impact Load:**
$P_h = 0.5K\gamma H_{soil}^2$	$P_h = K\gamma H_s H_{soil}$	$P_h = P_i/(L_d)$

	Load Factor	P_h	Moment Arm	Moment
Soil	1.00	2.21 K/F	3.58 F	7.92 K-F/F
Surcharge	1.00	0.00 K/F	5.38 F	0.00 K-F/F
Impact	0.00	0.00 K/F	10.75 F	0.00 K-F/F
	Total Horizontal Load	= 2.21 K/F	Overturn Mom.	= 7.92 K-F/F

Resisting Moment at Critical Section:

	Load Factor	Pv	Moment Arm	Moment
Soil Over Collar	1.00	1.98 K/F	1.67 F	3.31 K-F/F
Headwall Weight	1.00	1.34 K/F	0.42 F	0.56 K-F/F
Collar Weight	1.00	0.21 K/F	1.75 F	0.36 K-F/F
			Total Resisting Moment	= 4.23 K-F/F

Required Capacity:

M_{net} Required = 3.7 K-F/F

Required Insert Capacity = M_{net}/e

Required Insert Capacity, P_{req} = 2.18 K/F

Insert Capacity:

From Manufacturer's Data:

Insert Safe Tension, P_{all} = 7.39 K/INSERT **CONTROLS**

Coil Rod Capacity:

$\varphi F_t = 0.75F_u$ *(Allowable Tensile Stress per AISC LRFD T J3.2)*

φF_t = 56.25 KSI

A_{rod} = 0.54 in^2

Coil Rod Capacity = $F_t * A_{rod}$

Coil Rod Capacity, P_{all} = 30.43 K/ROD

(1 1/4"ϕ A303 Stainless Steel Rod, F_u = 75 ksi)

Coil Rod and Insert Shear Capacity (Service)

Required Capacity:

Req'd Shear Capacity, V_{req} = 2.21 K/F

Coil Rod Capacity:

$F_v = 0.4F_u$ *(Allowable Shear Stress per AISC LRFD T J3.2)*

F_v = 30.00 KSI

A_{rod} = 0.54 in^2

Allowable Shear = $Fv*A_{rod}$

Allowable Shear, V_{all} = 16.23 K/ROD

Insert Capacity:

From Manufacturer's Data:

Safe Shear Working Load, V_{all} = 4.96 K/INSERT **CONTROLS**

Maximum Spacing Based on Tension & Shear (Service)

S_{max} = Maximum Allowable Insert Spacing

Coil Rods

$(P*S/P_{all})^{5/3}+(V*S/V_{all})^{5/3}<=1.0$

S_{max} = 6.15 F

Inserts

$(P*S/P_{all})^{5/3}+(V*S/V_{all})^{5/3}<=1.0$

S_{max} = 1.76 F **CONTROLS**

Actual Spacing = 1.50 F **OK**

Check Bending at Base of Vertical Projection (Service)

Calculate Factored Moment

Soil:	**Surcharge:**	**Impact Load:**		
$P_h = 0.5K\gamma(H_{soil-tcol})^2$	$P_h = K\gamma H_s H_{soil(Hsoil-tcol)}$	$P_h = P_i/(L_d)$		
	P_h	Moment Arm	Load Factor	Factored Moments
Soil	1.88 K/F	3.31 F	1.00	= 6.21 K-F/F
Surcharge	0.00 K/F	4.96 F	1.00	= 0.00 K-F/F
Impact	0.00 K/F	9.92 F	0.00	= 0.00 K-F/F
Total Horizontal Load	= 1.88 K/F	Total Overturning Moment		= 6.21 K-F/F

Check Reinforcement

d_c = Cover+ bar/16	= 2.31 inches	
A	= 0.37 IN2/FT	
β_S	= 1.43	
γ_e	= 1.0000	
s	= 10.0000	
$F_{s\ allowable}$	= 33.48 ksi	
n	7.20	
$\rho = A_{sprov}/bd$ =	0.0044	
k =	0.286	
jd =	6.3 in	
$f_{s\ actual}$ =	32.3 ksi	**OK**

Resistance Factors

$\phi_{flexure}$ = 0.90

ϕ_{shear} = 0.90

Check Shear in Vertical Projection (Service)

(@ Distance "d" from Base of Wall)

V_u	= Load Factor*P_h+$LF_{surcharge}$*Ps	
	= 1.96 K/F	
ϕV_c	= $2\phi SQRT(f'_c)db$	*(Per AASHTO 5.8.3.3)*
	= 11.74 K/F	**OK**

Check Bending in Horizontal Projection (Service)

Calculate Factored Moment

Soil:	**Surcharge:**	**Impact Load:**		
$P_h = 0.5K\gamma(H_{soil}-t_{col}/2)^2$	$P_h = K\gamma H_{s(}H_{soil}-t_{col}/2)$	$P_h = P_i/(L_d)$		
	P_h	Moment Arm	Load Factor	Factored Moments
Soil	2.04 K/F	3.44 F	1.00	= 7.03 K-F/F
Surcharge	0.00 K/F	5.17 F	1.00	= 0.00 K-F/F
Impact	0.00 K/F	10.33 F	0.00	= 0.00 K-F/F
Total Horizontal Load	= 2.04 K/F		Total Overturning Moment	= 7.03 K-F/F

Resisting Moment at Critical Section:

	Pv	Moment Arm	Load Factor	Factored Moment
Soil Over Collar	1.98 K/F	1.67 F	1.00	3.31 K-F/F
Headwall Weight	1.34 K/F	0.42 F	1.00	0.56 K-F/F
Collar Weight	0.21 K/F	1.75 F	1.00	0.36 K-F/F
			Total Resisting Moment	= 4.23 K-F/F

Check Reinforcement

d_c = Cover + bar/16	= 2.31 inches	**Resistance Factors**
A	= 0.37 IN2/FT	$\phi_{flexure}$ = 0.90
β_S	= 1.43	ϕ_{shear} = 0.90
γ_e	= 1.0000	
s	= 10.0000	
$F_{s\ allowable}$	= 33.48 ksi	
n	7.20	
$\rho = A_{sprov}/bd$ =	0.0040	
k =	0.270	
jd =	7.0 in	*#5 @* 10" o.c.
$f_{s\ actual}$ =	13.1 ksi	**OK**

Check Shear in Horizontal Projection (Service)

(@ Distance "d" from Base of Wall)

V_u	"=((Factored Moment- Resisting Moment)/Moment Arm) + Lfsoil*soil weight"	
	= 2.98 K/F	
ϕV_c	= $2\phi SQRT(f'_c)db$	*(Per AASHTO 5.8.3.3)*
	= 11.74 K/F	**OK**

Check Bending in Bridge Slab (Service)

Calculate Factored Moment

Soil:	**Surcharge:**	**Impact Load:**		
$P_h = 0.5K\gamma(H_{soil})^2$	$P_h = K\gamma H_s(H_{soil})$	$P_h = P_i/(L_d)$		
	P_h	Moment Arm	Load Factor	Factored Moments
Soil	2.21 K/F	3.92 F	1.00	= 8.65 K-F/F
Surcharge	0.00 K/F	5.71 F	1.00	= 0.00 K-F/F
Impact	0.00 K/F	11.08 F	0.00	= 0.00 K-F/F
Total Horizontal Load	= 2.21 K/F	Total Overturning Moment		= 8.65 K-F/F

Check Reinforcement

d_c = Cover + bar/16	= 2.91 inches	
A	= 0.74 IN2/FT	
β_S	= 1.82	
γ_e	= 1.0000	
s	= 6.0000	
$F_{s\ allowable}$	= 32.56 ksi	
n	7.20	
$\rho = A_{sprov}/bd =$	0.0115	
k =	0.497	
jd =	4.5 in	
$f_{s\ actual}$ =	31.0 ksi	**OK**

Resistance Factors

$\phi_{flexure}$ = 0.90

ϕ_{shear} = 0.90

Strength I Load Combination

Strength I: 1.25DC + 1.35EH + 1.35EV + 1.75LS

Coil Rod & Insert Tensile Capacity (Strength)

Calculate Overturning Moment

Soil:	**Surcharge:**	**Impact Load:**
$P_h = 0.5K\gamma H_{soil}^2$	$P_h = K\gamma H_s H_{soil}$	$P_h = P_i/(L_d)$

	Load Factor	P_h	Moment Arm	Moment
Soil	1.50	2.21 K/F	3.58 F	11.88 K-F/F
Surcharge	1.75	0.00 K/F	5.38 F	0.00 K-F/F
Impact	0.00	0.00 K/F	10.75 F	0.00 K-F/F
	Total Horizontal Load	= 2.21 K/F	Total Overturn Mom.	= 11.88 K-F/F

Resisting Moment at Critical Section:

	Min. Load Factor	Pv	Moment Arm	Moment
Soil Over Collar	0.90	1.98 K/F	1.67 F	2.98 K-F/F
Headwall Weight	0.9	1.34 K/F	0.42 F	0.50 K-F/F
Collar Weight	0.9	0.21 K/F	1.75 F	0.33 K-F/F
			Total Resisting Moment	= 3.81 K-F/F

Required Capacity:

M_{net} Required = 8.1 K-F/F (= Overturning Moment - Resisting Moment)

Required Insert Capacity = M_{net}/e

Required Insert Capacity, P_{req} = 4.78 K/F

Insert Capacity:

From Manufacturer's Data:

Insert Ultimate Tension, P_{all} = 22.40 K/INSERT

Coil Rod Capacity:

$\varphi F_t = 0.75F_u$ *(Allowable Tensile Stress per AISC LRFD T J3.2)*

φF_t = 56.25 KSI

A_{rod} = 0.54 in^2

Coil Rod Capacity = $F_t * A_{rod}$

Coil Rod Capacity, P_{all} = 30.43 K/ROD

(A303 Stainless Steel Rod, F_u = 75 ksi)

Coil Rod and Insert Shear Capacity (Strength)

Required Capacity:

Req'd Shear Capacity, V_{req} = 3.31 K/F

Coil Rod Capacity:

$F_v = 0.4F_u$ *(Allowable Shear Stress per AISC LRFD T J3.2)*

F_v = 30.00 KSI

A_{rod} = 0.54 in^2

Allowable Shear = $Fv*A_{rod}$

Allowable Shear, V_{all} = 16.23 K/ROD

Insert Capacity:

From Manufacturer's Data:

Insert Ultimate Shear, V_{all} = 12.90 K/INSERT **CONTROLS**

Maximum Spacing Based on Tension & Shear (Strength)

S_{max} = Maximum Allowable Insert Spacing

Coil Rods

$(P*S/P_{all})^{5/3}+(V*S/V_{all})^{5/3}<=1.0$

S_{max} = 3.63 F

Inserts

$(P*S/P_{all})^{5/3}+(V*S/V_{all})^{5/3}<=1.0$

S_{max} = 2.80 F **CONTROLS**

Actual Spacing = 1.50 F **OK**

Check Bending at Base of Vertical Projection (Strength)

Calculate Factored Moment

Soil:	**Surcharge:**	**Impact Load:**
$P_h = 0.5K\gamma(H_{soil-tcol})^2$	$P_h = K\gamma H_s H_{soil(Hsoil-tcol)}$	$P_h = P_i/(L_d)$

	P_h	Moment Arm	Load Factor	Factored Moments
Soil	1.88 K/F	3.31 F	1.50	= 9.32 K-F/F
Surcharge	0.00 K/F	4.96 F	1.75	= 0.00 K-F/F
Impact	0.00 K/F	9.92 F	0.00	= 0.00 K-F/F
Total Horizontal Load	= 1.88 K/F		Total Overturning Moment	= 9.32 K-F/F

Check Reinforcement

M_u=	= 9.32 K-F/F	**Resistance Factors**	
$R_u=(M_u*12000)/\phi bd^2$	= 175.27 psi	$\phi_{flexure}$ =	0.90
$m=f_y/0.85f'_c$	= 14.12	ϕ_{shear} =	0.90
$c=A_{sprov}f_y/(0.85\beta f'_c b)$	= 0.54	(Per AASHTO LRFD 5.7.3.1.1-4)	
$\rho_{calculated}$	= 0.0030		
ρ_{min}	= 0.0016	*(Per AASHTO LRFD 5.7.3.3.2)*	
c/d	= 0.0704	**OK, c/d is less than 0.6**	
$\rho_{req'd}$	= 0.0030		

uired reinforcement is within acceptable range

$As_{req'd} = \rho_{req'd}*b*d$	= 0.30 in^2/F	
As_{prov}	= 0.37 in^2/F	#5 @ 10"
OK, Asprovided > Asreq'd		
$\phi M_{n=}\phi*Asprov*Fy*(d-a/2)/12$	= 12.1 K-F/F	(Per AASHTO LRFD 5.7.3.2.2-1)
OK		

Check Shear in Vertical Projection (Strength)

(@ Distance "d" from Base of Wall)

V_u	= Load Factor*P_h+$LF_{surcharge}$*Ps	
	= 2.94 K/F	
ϕV_c	= $2\phi SQRT(f'_c)db$	*(Per AASHTO 5.8.3.3)*
	= 11.74 K/F	**OK**

Check Bending in Horizontal Projection (Strength)

Calculate Factored Moment

Soil:	**Surcharge:**	**Impact Load:**		
$P_h = 0.5K\gamma(H_{soil}-t_{col}/2)^2$	$P_h = K\gamma H_s(H_{soil}-t_{col}/2)$	$P_h = P_i/(L_d)$		
	P_h	Moment Arm	Load Factor	Factored Moments
Soil	2.04 K/F	3.44 F	1.50	= 10.55 K-F/F
Surcharge	0.00 K/F	5.17 F	1.75	= 0.00 K-F/F
Impact	0.00 K/F	10.33 F	0.00	= 0.00 K-F/F
Total Horizontal Load	= 2.04 K/F		Total Overturning Moment	= 10.55 K-F/F

Resisting Moment at Critical Section:

	Min. Load Factor	Pv	Moment Arm	Factored Moment
Soil Over Collar	0.90	1.98 K/F	1.67 F	2.98 K-F/F
Headwall Weight	0.9	1.34 K/F	0.42 F	0.50 K-F/F
Collar Weight	0.9	0.21 K/F	1.75 F	0.33 K-F/F
			Total Resisting Moment	= 3.81 K-F/F

Check Reinforcement

M_u=	= 6.74 K-F/F	**Resistance Factors**	
$R_u=(M_u*12000)/\phi bd^2$	= 126.73 psi	$\phi_{flexure}$ =	0.90
$m=f_y/0.85f'_c$	= 14.12	ϕ_{shear} =	0.90
$c=A_{sprov}f_y/(0.85\beta f'_c b)$	= 0.54	(Per AASHTO LRFD 5.7.3.1.1-4)	
$\rho_{calculated}$	= 0.0021		
ρ_{min}	= 0.0011	*(Per AASHTO LRFD 5.7.3.3.2)*	
c/d	= 0.0704	**OK, c/d is less than 0.6**	
$\rho_{req'd}$	= 0.0021		

OK, required reinforcement is within acceptable range

$As_{req'd} = \rho_{req'd}*b*d$	= 0.22 in^2/F	
As_{prov}	= 0.37 in^2/F	#5 @ 10" o.c.

OK, Asprovided > Asreq'd

$\phi M_{n=}\phi*Asprov*Fy*(d-a/2)/12$	= 12.1 K-F/F	(Per AASHTO LRFD 5.7.3.2.2-1)

OK

Check Shear in Horizontal Projection (Strength)

(@ Distance "d" from Base of Wall)

V_u	"=((Factored Moment-Resisting Moment)/Moment Arm) + Lfsoil*soil weight"	
	= 5.98 K/F	
ϕV_c	= $2\phi SQRT(f'_c)db$	*(Per AASHTO 5.8.3.3)*
	= 11.74 K/F	**OK**

Check Bending in Bridge Slab (Strength)

Calculate Factored Moment

Soil:	**Surcharge:**	**Impact Load:**		
$P_h = 0.5K\gamma(H_{soil})^2$	$P_h = K\gamma H_s(H_{soil})$	$P_h = P_i/(L_d)$		
	P_h	Moment Arm	Load Factor	Factored Moments
Soil	2.21 K/F	3.92 F	1.50	= 12.98 K-F/F
Surcharge	0.00 K/F	5.71 F	1.75	= 0.00 K-F/F
Impact	0.00 K/F	11.08 F	0.00	= 0.00 K-F/F
Total Horizontal Load	= 2.21 K/F		Total Overturning Moment	= 12.98 K-F/F

Check Reinforcement

M_u=	= 12.98 K-F/F	**Resistance Factors**	
$R_u=(M_u*12000)/\phi bd^2$	= 494.60 psi	$\phi_{flexure}$ =	0.90
$m=f_y/0.85f'_{cunit}$	= 14.12	ϕ_{shear} =	0.90
$c=A_{sprov}f_y/(0.85\beta f'_{cunit}b)$	= 1.09	(Per AASHTO LRFD 5.7.3.1.1-4)	
$\rho_{calculated}$	= 0.0088		
ρ_{min}	= 0.0011	*(Per AASHTO LRFD 5.7.3.3.2)*	
c/d	= 0.2025	**OK, c/d is less than 0.6**	
$\rho_{req'd}$	= 0.0088		

OK, required reinforcement is within acceptable range

$As_{req'd} = \rho_{req'd}*b*d$	= 0.57 in^2/F
$\mathbf{As_{prov}}$	= 0.74 in^2/F

OK, Asprovided > Asreq'd

$\phi M_{n=}\phi$*Asprov*Fy*(d-a/2)/12	= 16.7 K-F/F	(Per AASHTO LRFD 5.7.3.2.2-1)

OK

HITEC-METHOD LRFD WINGWALL CALCULATIONS

PROJECT NUMBER: 468920-010
PROJECT NAME: US ROUTE 2
DATE: Dec 9, 2015
BY: KDK

WINGWALL LABEL WW1

INPUT PARAMETERS:

Wall geometry

Panel Height (high) = 8.72 ft
Panel Height (low) = 5.29 ft
Soil Ht Below Wall= 0.00 ft
Wall Panel Length = 10.18 ft
Entire Wall length = 10.18 ft
Length of flat = 1.00 ft
Total wall thickness = 10 in
Formliner relief = 0.0 in
Structural Wall Thickness = 10.00 in
Wingwall Drop (high-low) = 3.43 ft
Wall slope = 0.3733
Max fill ht. (t/road to b/ww) = 24.00 ft
Fill Slope (perp. to road) = 5.00
Wall angle (perp. to road) = 15
Fill slope (perp. to wall) = 19.32

Wingwall properties

Wingwall Panel Connected to arch unit = ☑
Surcharge on plate Y/N = ☐
Hooked Bars = ☐
epoxy coated = ☐
Precast Foundations = ☐

Connection Plates

plates= 2
Check bolt: OK
Check plate: OK
Plate Stress = 27.0 psi

Soil properties

γ_{soil} = 120 pcf
γ_{conc} = 150 pcf
$\gamma_{LLsurcharge}$ = 125 pcf
ϕ_{AB} = 32
θ_{AB} = 0
δ_{AB} = 24
ϕ_{BC} = 32
θ_{BC} = 30
δ_{BC} = 16

Concrete properties

f'_c = 5000 psi
fy = 60000 psi

YP2= 6.00 ft
YP1= 21 in

Foundation

BY OTHERS

Impact loading

Barrier Type = NONE
Loading Type = NO IMPACT
Impact load = 0.00 K
Distance from Top of Pavement =
Distribution Width = 6.08 ft

Liveload Surcharge

Surcharge = ☐ 0.00 ft

Vertical wall reinforcement

Grouped Rebar
Grouped Rebar = 4 - # 4
Check A_s: *OK* Check Vu: *OK*

	Distance to Anchor	Overriding perp. Slope at Anchor	Wall height at Anchor	Contrib. Width	Perp. slope used at Anchor	h_{eq} LL Surch	Anchor Type	Check Bearing of Footing	Check 'e' of wall on top of footing	Check Sliding
Anchor #1	3.00 ft	N	6.41 ft	5.500 ft	19.32	0.00 ft	C		*OK*	

1. Wingwall calculations are done in accordance with the current edition of the AASHTO LRFD Bridge Design Specifications.
2. Moments are summed about the toe (face) of the wingwall (point "o" on "Pressure Diagram").
3. Ka is calculated using equation found in former AASHTO Standard Specifications Figure 5.9.2A (same as current AASHTO Standa Specifications Figure 5.5.2A, with q defined using a different reference line.)

$$\frac{\cos^2(\phi+\theta)}{\cos^2\theta\cos(\theta-\delta)\left[1+\sqrt{\frac{\sin(\phi+\delta)\sin(\phi-\beta)}{\cos(\theta-\delta)\cos(\theta+\beta)}}\right]^2}$$

4. Only 80% of the soil unit weight is used for the eccentricity/ stability calculation. This is a conservative assumption as explained HITEC report "Evaluation of the CON/SPAN® Wingwall System"
5. The full 100% of the soil unit weight is used for the bearing calculations.
6. These calculations conservatively assume that the wall anchor has the same unit weight as soil.
7. The wingwall angle (in plan view) is measured from perpendicular to roadway.
8. Barrier loads are distributed per AASHTO LRFD Specifications Section 3.24.5.2.

PRESSURE DIAGRAM FOR WINGWALL ANCHOR STABILITY CALCULATIONS

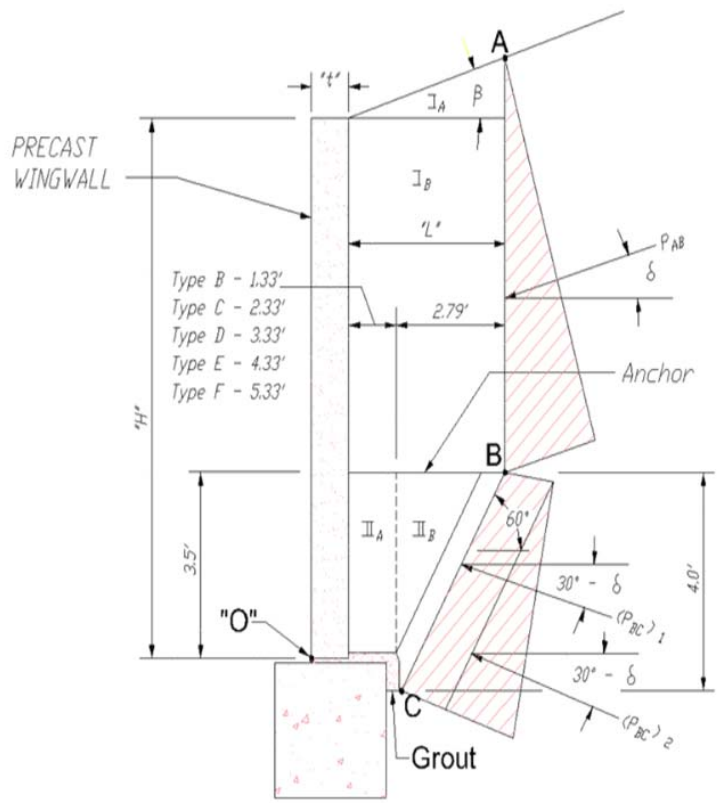

CONTECH BRIDGE SOLUTIONS INC.

#468920-010 US ROUTE 2

ANCHOR 1

VARIABLE	DESCRIPTION OF VARIABLE	VALUE (Section AB)	VALUE (Section BC)
ϕ	internal friction angle of soil	32	32
θ	angle of wall to the y-axis	0	30
δ	wall-soil friction angle *(measured from a perpendicular with the wall)*	24	16
	= 0, if significant vibrations of backfill or modules settling more than backfill		
	= 0.5*ϕ, if modules are uniform width.		
	= 0.75*ϕ, if averaged pressure surface		
x	side slopes from road (x:1)	5.0	
α	wingwall angle (angle w/ perpendicular to road)	15	
	slope of backfill (perpendicular to wall)	19.32	
β	angle of backfill (perpendicular to wall)	3.0	3.0

$(K_a)_{AB}$ = 0.28 $(K_a)_{BC}$ = 0.11

VARIABLE	DESCRIPTION OF VARIABLE	VALUE	
H	backfill design height at anchor location (feet)	6.41	
Hw	wingwall design height at anchor location (feet)	6.41	
h_{eq}	height of live load surcharge (feet)	0.00	*(see AASHTO Table 3.11.6.4-2)*
t	thickness of wingwall (inches)	10	
δ	wall friction angle for section AB	24	
β	angle of backfill (degrees)	3.0	
L	length of anchor (feet)	5.04	C
γ_s	unit weight of backfill (kcf)	0.120	
γ_c	unit weight of concrete (kcf)	0.150	
γ_{surch}	unit weight of surcharge (kcf)	0.125	

Element	Load Factor *(stability)*	Load Factor *(bearing)*	Unfact'd Vert Reaction (k/ft)	Unfact'd Horiz Reaction (k/ft)	Fact'd Vert Reaction (k/ft) *(stability)*	Fact'd Vert Reaction (k/ft) *(bearing)*	Fact'd Horiz Reaction (k/ft) *(stability)*	Fact'd Horiz Reaction (k/ft) *(bearing)*	Lever Arm (ft)	Sum of Unfact'd Moments (ft-k/ft)	Sum of Fact'd Moments (ft-k/ft) *(stability)*	Sum of Fact'd Moments (ft-k/ft) *(bearing)*
wall (W_w)	1.25	1.25	0.80		1.00	1.00			0.42	0.33	0.42	0.42
soil I_A	1.35	1.35	0.08		0.11	0.11			4.19	0.33	0.36	0.45
soil I_B	1.35	1.35	1.76		2.38	2.38			3.35	5.91	6.38	7.97
soil II_A	1.35	1.35	0.95		1.28	1.28			1.96	1.85	2.00	2.50
soil II_B	1.35	1.35	0.59		0.79	0.79			3.85	2.26	2.44	3.05
$W_{surcharge\ (vert)}$	1.75	1.75	0.00		0.00	0.00			3.35	0.00	0.00	0.00
Soil Pressure												
$(P_{AB})_v$	0.90	1.50	0.07		0.06	0.10			5.87	0.41	0.37	0.62
$(P_{AB})_h$	0.90	1.50		0.16			0.14	0.24	4.56	-0.71	-0.64	-1.07
$(P_{BC1})_v$	0.90	1.50	-0.05		-0.04	-0.07			4.72	-0.22	-0.20	-0.33
$(P_{BC1})_h$	0.90	1.50		0.19			0.17	0.28	1.50	-0.28	-0.25	-0.42
$(P_{BC2})_v$	0.90	1.50	-0.03		-0.03	-0.04			4.33	-0.13	-0.11	-0.19
$(P_{BC2})_h$	0.90	1.50		0.12			0.11	0.18	0.83	-0.10	-0.09	-0.15
$P_{surcharge\ (hor)}$	1.75	1.75		0.00			0.00	0.00	3.34	0.00	0.00	0.00
TOTALS =			4.17	0.46	5.55	5.54	0.41	0.69		9.65	10.66	12.84

ℓ = location of resultant = $\Sigma M / \Sigma R_v$ =

unfactored	2.32 ft
stability	1.92 ft
bearing	2.32 ft

CONTECH BRIDGE SOLUTIONS INC.

#468920-010 US ROUTE 2

STABILITY

II. CHECK STABILITY (ECCENTRICITY & SLIDING) OF WALL

Check the eccentricity of the vertical resultant of the wall above the CIP footing:

R_v = Total factored vertical reaction for anchor's wall section (using 80% of soil weight). (Refer to anchor's calculation sheet *"Factored Vertical Reaction (e & sliding)".*)

R_h = Total factored horizontal reaction for anchor's wall section. (Refer to anchor's calculation sheet *"Factored Horizonatal Reaction"* .)

ℓ = location of resultant of factored vertical forces at base of anchor (for each anchor section). (Refer to anchor's calculation sheet *"ℓ - e & sliding"* .)

e = eccentricity of resultant of factored vertical forces compared to base length

e_{max} = 0..45*base length (ℓ must be within the middle 9/10 of the base, since the precast wall sits on a CIP foundation, which is equivalent to rock. *AASHTO 11.6.3.3)*

Check eccentricity of vertical resultant at base of anchor (for each anchor section)

anchor section	base length	R_v (K/F)	R_h (K/F)	ℓ (ft)	e (ft)	check e < emax	e inside mid. 9/10?
1	3.56	5.55	0.41	1.92	-0.14	***OK***	*yes*

V. CHECK STABILITY AT CONNECTION PLATES

The connection plates provide stability for the portion of the wall not supported by the anchors, i.e., the section closest to the culvert.

Data:

number of plates = 2

ϕ = 32

δ = 24

γ_s = 0.120 kcf

$\gamma_{(surcharge)}$ = 0.125 kcf

soil height @ plates (H) = **8.72 ft**

Live load surcharge (h) = **0.00 ft**

section width for plates (S) = 4.7 ft

y_{Psh} = H/3 = 2.9 ft

y_{PLL} = H/2 = 4.4 ft

y_{p1} = **1.75 ft**

y_{p2} = **7.75 ft**

A_{bolt} = **0.79**

t_{plate} = **1.00 in**

(A307 -AASHTO 6.5.4.2) $\phi_{t(bolt)}$ = **0.80**

(A307 -AASHTO 6.4.3.1) $F_{u(bolt)}$ = **60 ksi**

(AASHTO 6.5.4.2) ϕ_f = **1.00**

(A36 -AASHTO Table 6.4.1-1) $F_{y(plate)}$ = **36 ksi**

Find loads (soil pressure) on section:

Because the wall is more rigid at the plates, at-rest soil pressure coefficient (K_o) is used.

$K_o = 1\text{-}\sin\phi = 0.47$ *(AASHTO eqn 3.11.5.2-1)*

$P_{sh} = (^1/_2)\gamma_s K_o H^2(S)(\cos\delta) = 9.17$ K

$P_{LLh} = K_o\gamma_s HhS(\cos\delta) = 0.00$ K

P_{bar} = S*Rail Load/L_d = 0.00 K

Find reaction at plate:

Sum moments about bottom plate, p_1

$\Sigma M_{p1DL} = 0 = P_{sh}(y_{Psh} - y_{p1}) - p_2(y_{p2} - y_{p1})$ *(dead load)*

$\Sigma M_{p1LL} = 0 = P_{LL}(y_{PLL} - y_{p1}) - p_{2LL}(y_{p2} - y_{p1})$ *(live load)*

$\Sigma M_{p1bar} = 0 = P_{bar}(y_{Pimp} - y_{p1}) - p_{2bar}(y_{p2} - y_{p1})$ *(barrier load)*

$p_{2DL} = \dfrac{P_{sh}(y_{Psh} - y_{p1})}{(y_{p2} - y_{p1})} = 1.77$ K $\qquad p_{1DL} = P_{sh} - p_{2DL} = 7.40$ K

$p_{2LL} = \dfrac{P_{LLh}(y_{pLL} - y_{p1})}{(y_{p2} - y_{p1})} = 0.00$ K $\qquad p_{1LL} = P_{LL} - p_{2LL} = 0.00$ K

$p_{2bar} = \dfrac{P_{bar}(y_{imp} - y_{p1})}{(y_{p2} - y_{p1})} = 0.00$ K $\qquad p_{1bar} = P_{bar} - p_{2bar} = 0.00$ K

$p_{2(tot)} = 1.77$ K $\qquad p_{1(tot)} = 7.40$ K Controls

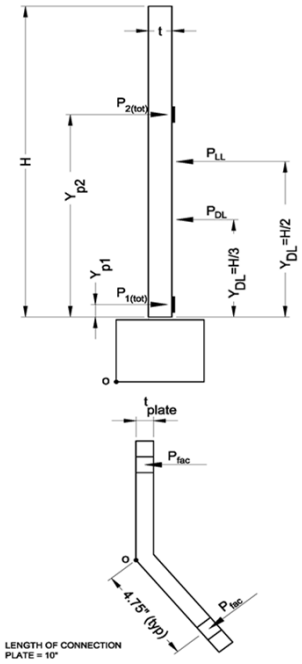

Find factored reaction:

Load factors are per AASHTO Table 3.4.1-1and AASHTO Table 3.4.1-2

$p_{u\ STR\ I} = (1.35)p_{max(DL)} + (1.75)p_{max(LL)}$

$p_{u\ EXT\ II} = (1.35)p_{max(DL)} + (0.50)p_{max(LL)} + (1.0)p_{bar}$

$p_{u\ max} = 9.99$ K

Check bolts : The special Richmond 2-bolt wingwall insert pullout capacity was obtained from the manufacturer and has approx. 3:1 safety factor. ϕTn is defined in AASHTO 6.13.2.10.2.

Pullout capacity = 16.5 k/bolt

check p_u < pullout capacity*2 bolts = *OK*

Bolt tension capacity, $\phi_t T_n = \phi 0.76 * F_{ubolt} A_{bolt}$ = 28.8 k/bolt

check $p_u < \phi_t T_n$*2 bolts = *OK*

Check bending of plate:

Find maximum bending stress in plate.

$M_u = (p_u)(4.5")$ = 45.0 k-in

$I_{pl} = bt_{plate}^3/12$ = 0.83 in^4

$F_{ult} = M_u y / I_{pl}$ = 27 ksi

check $F_{ult} < \phi_f F_y$ = *OK*

V. CHECK WALL SECTION - BENDING AND SHEAR (vertical bars)

Assumptions: *1. Wall stem is cantilevered from anchor*
2. Use active earth pressure because wall can deflect at top.
3. Critical Wall section will be at maximum horizontal load

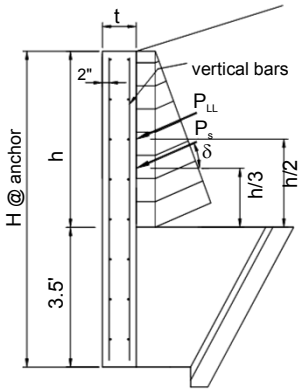

Horizontal loads:

$P_{sh} = (^1/_2)\gamma_s K_a h^2(\cos\delta)$

$P_{LLh} = \gamma_s K_a h(h_{surcharge})(\cos\delta)$

$P_{impact} = P_{imp}/L_{distr}$

Factored forces:

Load factors are per AASHTO Table 3.4.1-1and AASHTO Table 3.4.1-2

$M_{u\ Strength\ I}$ = Section width*[(1.5)P_{sh}·(h/3) + (1.75)P_{LLh}·(h/2)

$M_{u\ Ext\ II}$ = Section Width*[1.50P_{sh}·(h/3) + 0.50P_{LLh}·(h/2) + 1.00P_{imp}·(h+h_{rail})]

$V_{u\ Strength\ I}$ = Section Width* (1.50)P_{sh} + (1.75)P_{LLh}

$V_{u\ Ext\ II}$ = Section Width*[1.50P_{sh} + 0.50P_{LLh} + 1.00P_{imp}]

Summary of forces at anchors

anchor	H (ft)	h (ft)	$h_{surcharge}$ (ft)	P_{sh} (k/ft)	P_{LLh} (k/ft)	P_{imp} (k/ft)	$M_{u\ Strength\ 1}$ (k-ft)	$M_{u\ Ext.\ II}$ (k-ft)	$V_{u\ strength\ I}$ (k)	$V_{u\ ext\ I}$ (k)
1	6.41	2.91	0.00	0.13	0.00	0.00	1.06	1.06	1.09	1.09

Check bending (reinforcment) at anchors

f'_c = **5000 psi**

f_y = **60000 psi**

ϕ_b = **0.9** *(AASHTO 5.5.4.2.1)*

m = $f_y/0.85f'_c$ = 14.12

b = anchor's contrib. width

β = 0.8

$$R_u = \frac{M_u}{\phi_b b d^2}$$

$$\rho_{reqd} = \frac{1}{m}\left(1-\sqrt{1-\frac{2mR_u}{f_y}}\right)$$

ρ_{cr} *(steel ratio required to achieve 1.2Mcr, per AASHTO 5.7.3.3.2)*

$1.33\rho_{min}$ *(steel ratio required to achieve 1.33 times the factored moment strength per*

$\rho_{req'd}$ *(actual steel ratio is the minimum of the requirements of AASHTO 5.7.3.3.2, or rstrength)*

anchor	R_u (psi)	$\rho_{strength}$	ρ_{cr}	$1.33\rho_{strength}$	$\rho_{required}$	$A_{s\ min}$ (in2)	Bar Size	number of bars	$A_{s\ actual}$ (in2)	check
	4	0.0001	0.0028	0.0001	0.0001	0.04	#4 bars	4	1.50	*OK*

V. CHECK WALL SECTION - BENDING AND SHEAR (vertical bars)

Check shear

According to AASHTO 5.8.2.4, shear reinforcement is not required if $V_u < (0.5)\,\phi V_c$

$$\phi V_c = \phi_v\, 0.0316\ \beta \sqrt{f'_c}\, bd$$ *(AASHTO eq'n 5.8.3.3-3)*

anchor	ϕV_c	check Vu <0.5 ϕVc
1	63.71	***OK***

anchor	a	β	c	ϕMn	check Mu < ϕMn
1	0.32	0.80	0.40	51.24	***OK***

VII. CHECK TYPE 'C' ANCHOR ATTACHMENT

Check capacity of connector for pullout (truncated pyramid failure), shear, tension, and combined shear & tension

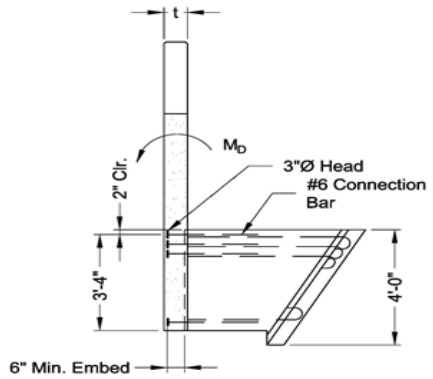

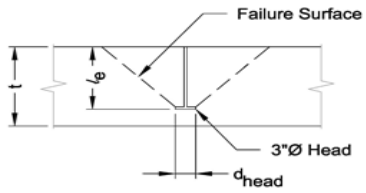

embedment depth (ℓ_e)= **6 in**

Attachment depth = 42 in
X head dimension (Xd_{head}) = 3 in
Y head dimension (Yd_{head}) = 3 in
Bar size = **# 6**
rows = **3**
row spacing = **5 in**
wall thickness (t) = 10 in
x = Xd_{head} (*since only 1 column*) = 3 in
y = (#rows-1)(row spacing) + Yd_{head} = 13 in
z = min(x,y) = 3 in
h_{min} = (z + 2ℓ_e)/2 = 7.5 in
A_R = (x+2ℓ_e-2t)(y+2ℓ_e-2t) = -25.0 in^2

f'_c = 5000 psi
f_y = 60000 psi
$\phi_{concrete}$ = 0.85
ϕ_{steel} = 0.90

TENSION CAPACITY (Per PCI Design Handbook §6.5.2.1)

t > hmin: failure surface does not penetrate slab

Find pullout capacity of concrete

if t >= h_{min}, ϕP_c = ϕ2.67sqrt(f'c)(x+2ℓe)(y+2ℓe)
if t < h_{min}, ϕP_c = ϕ2.67sqrt(f'c)[(x+2ℓe)(y+2ℓe) - A_R]
ϕP_c = 60.18 K

Find tension capacity of studs

ϕP_y = $\phi f_y(A_{bar})$(#bars)
ϕP_y = 71.57 K

controlling tension capacity (ϕP) = 60.18 K

Find moment capacity of anchor

Moment capacity of anchor (ϕM_n) = ϕP(d-a/2)
d = attachment depth - bar cover - (y-Yd_{head})/2 = 35 in
a = $A_s f_y$/0.85f'$_c$b = 3.12 in
ϕM_n = 167.70 k-f

CONTECH BRIDGE SOLUTIONS INC.

#468920-010 US ROUTE 2

VII. CHECK TYPE 'C' ANCHOR ATTACHMENT

SHEAR CAPACITY (Per PCI Design Handbook §6.5.2.2)

Find shear capacity of concrete

$\phi V_c = \phi V'_c C_w C_t C_c$

$\phi V'_c = \phi 12.5 d_e^{1.5} \text{sqrt}(f'_c)$	= 187.4 K
$C_w = 1 + \text{spacing}/3.5d_e < \#\text{columns}$	= 1.0
$C_t = t/1.3d_e <= 1.0$	= 0.19
$C_c = 0.4 + 0.7d_c/de <= 1.0$	= 1.0
d_e = attachment depth - cover - bar dia/2	= 40 in
d_c = distance to side of wingwall	= 36 in

$\phi V_c = \phi V'_c C_w C_t C_c =$ 36.38 K

Find shear capacity of studs

$\phi V_y = \phi 0.9 f_y A_{bar}(\#\text{bars})$

$\phi V_y =$ 64.41 K

controlling shear capacity (ϕV) = 36.38 K

FIND LOADS

Unfactored loads on anchors:

$M_{D(DL)}$ = (sec width)$M_{D(anchor)}$

$M_{D(LL)}$ = (sec width)($M_{D(anchor)}$ + P_{imp}*(wall ht + y_{imp}))

Factored loads:

Load factors are per AASHTO 3.4.1-1 & Table 3.4.1-2

$M_{u\ STR1} = 1.5M_{D(DL)} + 1.75M_{D(LL)}$

$M_{u\ EXTII} = 1.5M_{D(DL)} + 0.5M_{D(LL)} + 1.0M_{(BAR)}$

$P_u = M_u$ /(d-a/2)*cos(bar angle)

$V_u = M_u$ /(d-a/2)*sin(bar angle)

bar angle = 0

anchor	$M_{D(DL)}$ K-ft	$M_{D(LL)}$ K-ft	M_{bar} K-ft	$M_{u\ STR\ I}$ K-ft	$M_{u\ EXT\ II}$	P_u K	V_u K
1	6.0	0.0	0.0	9.0	9.0	3.2	0.0

anchor	check $\phi M_n > M_u$	check $\phi P > P_u$	check $\phi V > V_u$	check combined V_c & P_c	check combined V_s & P_s	Check Splice	ALL CHECKS OK
1	*OK*	*OK*	*OK*	*OK*	*OK*	*OK*	*OK*

HITEC-METHOD LRFD WINGWALL CALCULATIONS

PROJECT NUMBER: 468920-010
PROJECT NAME: US ROUTE 2
DATE: Dec 9, 2015
BY: KDK

WINGWALL LABEL WW2

INPUT PARAMETERS:

Wall geometry

Panel Height (high) = 13.21 ft
Panel Height (low) = 2.25 ft
Soil Ht Below Wall= 0.00 ft
Wall Panel Length = 22.00 ft
Entire Wall length = 22.00 ft
Length of flat = 1.00 ft
Total wall thickness = 10 in
Formliner relief = 0.0 in
Structural Wall Thickness = 10.00 in
Wingwall Drop (high-low) = 10.96 ft
Wall slope = 0.5218
Max fill ht. (t/road to b/ww) = 24.00 ft
Fill Slope (perp. to road) = 5.00
Wall angle (perp. to road) = 30
Fill slope (perp. to wall) = 10.00

Wingwall properties

Wingwall Panel Connected to arch unit = ☑
Surcharge on plate Y/N = ☐
Hooked Bars = ☐
epoxy coated = ☐
Precast Foundations = ☐

Connection Plates

plates= 2
Check bolt: OK
Check plate: OK
Plate Stress = 18.3 psi

Soil properties

γ_{soil} = 120 pcf
γ_{conc} = 150 pcf
$\gamma_{LLsurcharge}$ = 125 pcf
ϕ_{AB} = 32
θ_{AB} = 0
δ_{AB} = 24
ϕ_{BC} = 32
θ_{BC} = 30
δ_{BC} = 16

Concrete properties

f'_c = 5000 psi
fy = 60000 psi

YP2= 6.00 ft
YP1= 21 in

Foundation

BY OTHERS

Impact loading

Barrier Type = NONE
Loading Type = NO IMPACT
Impact load = 0.00 K
Distance from Top of Pavement =
Distribution Width = 10.26 ft

Liveload Surcharge

Surcharge = ☐ 0.00 ft

Vertical wall reinforcement

Grouped Rebar
Grouped Rebar = 2 - # 5
Check A_s: OK Check Vu: OK

The vertical bar calculations are missing from this wingwall, please included these calculations which were supplied for the other wingwalls.

	Distance to Anchor	Overriding perp. Slope at Anchor	Wall height at Anchor	Contrib. Width	Perp. slope used at Anchor	h_{eq} LL Surch	Anchor Type	Check Bearing of Footing	Check 'e' of wall on top of footing	Check Sliding
Anchor #1	3.00 ft	2.0	3.82 ft	5.500 ft	2.00	0.00 ft	A		OK	
Anchor #2	8.00 ft	2.0	6.42 ft	5.000 ft	2.00	0.00 ft	B		OK	
Anchor #3	13.00 ft	2.0	9.03 ft	5.000 ft	2.00	0.00 ft	C		OK	
Anchor #4	18.00 ft	2.0	11.64 ft	4.50 ft	2.00	0.00 ft	D		OK	

1. Wingwall calculations are done in accordance with the current edition of the AASHTO LRFD Bridge Design Specifications.
2. Moments are summed about the toe (face) of the wingwall (point "o" on "Pressure Diagram").
3. Ka is calculated using equation found in former AASHTO Standard Specifications Figure 5.9.2A (same as current AASHTO Standa Specifications Figure 5.5.2A, with q defined using a different reference line.)

$$\frac{\cos^2(\phi+\theta)}{\cos^2\theta\cos(\theta-\delta)\left[1+\sqrt{\frac{\sin(\phi+\delta)\sin(\phi-\beta)}{\cos(\theta-\delta)\cos(\theta+\beta)}}\right]^2}$$

4. Only 80% of the soil unit weight is used for the eccentricity/ stability calculation. This is a conservative assumption as explained HITEC report "Evaluation of the CON/SPAN® Wingwall System"
5. The full 100% of the soil unit weight is used for the bearing calculations.
6. These calculations conservatively assume that the wall anchor has the same unit weight as soil.
7. The wingwall angle (in plan view) is measured from perpendicular to roadway.
8. Barrier loads are distributed per AASHTO LRFD Specifications Section 3.24.5.2.

PRESSURE DIAGRAM FOR WINGWALL ANCHOR STABILITY CALCULATIONS

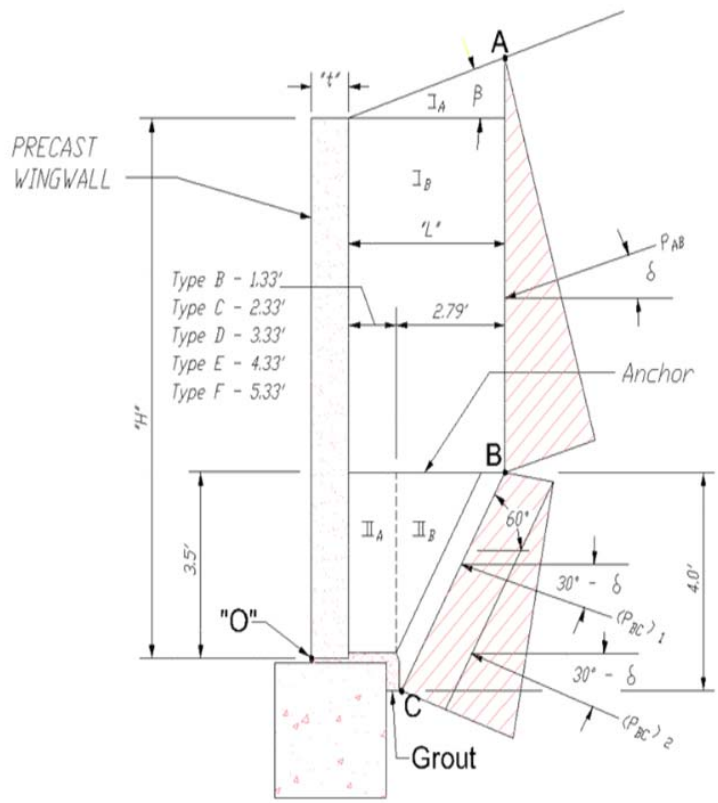

CONTECH BRIDGE SOLUTIONS INC.

#468920-010 US ROUTE 2

ANCHOR 1

VARIABLE	DESCRIPTION OF VARIABLE	VALUE (Section AB)	VALUE (Section BC)
ϕ	internal friction angle of soil	32	32
θ	angle of wall to the y-axis	0	30
δ	wall-soil friction angle *(measured from a perpendicular with the wall)*	24	16
	= 0, if significant vibrations of backfill or modules settling more than backfill		
	= 0.5*ϕ, if modules are uniform width.		
	= 0.75*ϕ, if averaged pressure surface		
x	side slopes from road (x:1)	2.0	
α	wingwall angle (angle w/ perpendicular to road)	30	
	slope of backfill (perpendicular to wall)	2.00	
β	angle of backfill (perpendicular to wall)	26.6	26.6

$(K_a)_{AB}$ = 0.46 $(K_a)_{BC}$ = 0.16

VARIABLE	DESCRIPTION OF VARIABLE	VALUE	
H	backfill design height at anchor location (feet)	3.82	
Hw	wingwall design height at anchor location (feet)	3.82	
h_{eq}	height of live load surcharge (feet)	0.00	*(see AASHTO Table 3.11.6.4-2)*
t	thickness of wingwall (inches)	10	
δ	wall friction angle for section AB	24	
β	angle of backfill (degrees)	26.6	
L	length of anchor (feet)	3.18	A
γ_s	unit weight of backfill (kcf)	0.120	
γ_c	unit weight of concrete (kcf)	0.150	
γ_{surch}	unit weight of surcharge (kcf)	0.125	

Element	Load Factor *(stability)*	Load Factor *(bearing)*	Unfact'd Vert Reaction (k/ft)	Unfact'd Horiz Reaction (k/ft)	Fact'd Vert Reaction (k/ft) *(stability)*	Fact'd Vert Reaction (k/ft) *(bearing)*	Fact'd Horiz Reaction (k/ft) *(stability)*	Fact'd Horiz Reaction (k/ft) *(bearing)*	Lever Arm (ft)	Sum of Unfact'd Moments (ft-k/ft)	Sum of Fact'd Moments (ft-k/ft) *(stability)*	Sum of Fact'd Moments (ft-k/ft) *(bearing)*
wall (W_w)	0.90	0.90	0.48		0.43	0.43			0.42	0.20	0.18	0.18
soil I_A	1.00	1.00	0.30		0.30	0.30			2.95	0.90	0.72	0.90
soil I_B	1.00	1.00	0.69		0.69	0.69			2.42	1.68	1.34	1.68
soil II_A	1.00	1.00	0.30		0.30	0.30			1.46	0.44	0.35	0.44
soil II_B	1.00	1.00	0.23		0.23	0.23			2.57	0.59	0.47	0.59
$W_{surcharge\ (vert)}$	1.75	1.75	0.00		0.00	0.00			2.42	0.00	0.00	0.00
Soil Pressure												
$(P_{AB})_v$	1.50	1.50	0.13		0.19	0.19			4.01	0.52	0.78	0.78
$(P_{AB})_h$	1.50	1.50		0.29			0.44	0.44	3.14	-0.91	-1.37	-1.37
$(P_{BC1})_v$	1.50	1.50	-0.05		-0.07	-0.07			3.29	-0.15	-0.23	-0.23
$(P_{BC1})_h$	1.50	1.50		0.19			0.28	0.28	0.75	-0.14	-0.21	-0.21
$(P_{BC2})_v$	1.50	1.50	-0.02		-0.03	-0.03			3.05	-0.05	-0.08	-0.08
$(P_{BC2})_h$	1.50	1.50		0.07			0.10	0.10	0.33	-0.02	-0.03	-0.03
$P_{surcharge\ (hor)}$	1.75	1.75		0.00			0.00	0.00	2.70	0.00	0.00	0.00
TOTALS =			2.07	0.55	2.06	2.06	0.82	0.82		3.05	1.93	2.65

ℓ = location of resultant = $\Sigma M / \Sigma R_v$ =

unfactored	1.47 ft
stability	0.94 ft
bearing	1.29 ft

CONTECH BRIDGE SOLUTIONS INC.

#468920-010 US ROUTE 2

ANCHOR 2

VARIABLE	DESCRIPTION OF VARIABLE	VALUE (Section AB)	VALUE (Section BC)
ϕ	internal friction angle of soil	32	32
θ	angle of wall to the y-axis	0	30
δ	wall-soil friction angle *(measured from a perpendicular with the wall)*	24	16
	= 0, if significant vibrations of backfill or modules settling more than backfill		
	= 0.5*ϕ, if modules are uniform width.		
	= 0.75*ϕ, if averaged pressure surface		
x	side slopes from road (x:1)	2.0	
α	wingwall angle (angle w/ perpendicular to road)	30	
	slope of backfill (perpendicular to wall)	2.00	
β	angle of backfill (perpendicular to wall)	26.6	26.6

$(K_a)_{AB}$ = 0.46 $(K_a)_{BC}$ = 0.16

VARIABLE	DESCRIPTION OF VARIABLE	VALUE	
H	backfill design height at anchor location (feet)	6.42	
Hw	wingwall design height at anchor location (feet)	6.42	
h_{eq}	height of live load surcharge (feet)	0.00	*(see AASHTO Table 3.11.6.4-2)*
t	thickness of wingwall (inches)	10	
δ	wall friction angle for section AB	24	
β	angle of backfill (degrees)	26.6	
L	length of anchor (feet)	4.04	B
γ_s	unit weight of backfill (kcf)	0.120	
γ_c	unit weight of concrete (kcf)	0.150	
γ_{surch}	unit weight of surcharge (kcf)	0.125	

Element	Load Factor *(stability)*	Load Factor *(bearing)*	Unfact'd Vert Reaction (k/ft)	Unfact'd Horiz Reaction (k/ft)	Fact'd Vert Reaction (k/ft) *(stability)*	Fact'd Vert Reaction (k/ft) *(bearing)*	Fact'd Horiz Reaction (k/ft) *(stability)*	Fact'd Horiz Reaction (k/ft) *(bearing)*	Lever Arm (ft)	Sum of Unfact'd Moments (ft-k/ft)	Sum of Fact'd Moments (ft-k/ft) *(stability)*	Sum of Fact'd Moments (ft-k/ft) *(bearing)*
wall (W_w)	0.90	1.25	0.80		0.72	1.00			0.42	0.33	0.30	0.42
soil I_A	1.00	1.35	0.49		0.49	0.66			3.53	1.73	1.38	2.33
soil I_B	1.00	1.35	1.42		1.42	1.91			2.85	4.05	3.24	5.46
soil II_A	1.00	1.35	0.53		0.53	0.71			1.46	0.77	0.61	1.03
soil II_B	1.00	1.35	0.59		0.59	0.79			2.85	1.67	1.34	2.26
$W_{surcharge\ (vert)}$	1.75	1.75	0.00		0.00	0.00			2.85	0.00	0.00	0.00
Soil Pressure												
$(P_{AB})_v$	1.50	1.50	0.27		0.41	0.41			4.87	1.33	2.00	2.00
$(P_{AB})_h$	1.50	1.50		0.61			0.92	0.92	5.15	-3.16	-4.75	-4.75
$(P_{BC1})_v$	1.50	1.50	-0.11		-0.16	-0.16			3.72	-0.40	-0.60	-0.60
$(P_{BC1})_h$	1.50	1.50		0.43			0.65	0.65	1.50	-0.65	-0.98	-0.98
$(P_{BC2})_v$	1.50	1.50	-0.04		-0.07	-0.07			3.33	-0.15	-0.22	-0.22
$(P_{BC2})_h$	1.50	1.50		0.18			0.26	0.26	0.83	-0.15	-0.22	-0.22
$P_{surcharge\ (hor)}$	1.75	1.75		0.00			0.00	0.00	4.22	0.00	0.00	0.00
TOTALS =			3.94	1.22	3.92	5.26	1.84	1.84		5.37	2.11	6.74

ℓ = location of resultant = $\Sigma M / \Sigma R_v$ =

unfactored	1.36 ft
stability	0.54 ft
bearing	1.28 ft

CONTECH BRIDGE SOLUTIONS INC.

#468920-010 US ROUTE 2

ANCHOR 3

VARIABLE	DESCRIPTION OF VARIABLE	VALUE (Section AB)	VALUE (Section BC)
ϕ	internal friction angle of soil	32	32
θ	angle of wall to the y-axis	0	30
δ	wall-soil friction angle *(measured from a perpendicular with the wall)*	24	16
	= 0, if significant vibrations of backfill or modules settling more than backfill		
	= 0.5*ϕ, if modules are uniform width.		
	= 0.75*ϕ, if averaged pressure surface		
x	side slopes from road (x:1)	2.0	
α	wingwall angle (angle w/ perpendicular to road)	30	
	slope of backfill (perpendicular to wall)	2.00	
β	angle of backfill (perpendicular to wall)	26.6	26.6

$(K_a)_{AB}$ = 0.46 $(K_a)_{BC}$ = 0.16

VARIABLE	DESCRIPTION OF VARIABLE	VALUE	
H	backfill design height at anchor location (feet)	9.03	
Hw	wingwall design height at anchor location (feet)	9.03	
h_{eq}	height of live load surcharge (feet)	0.00	*(see AASHTO Table 3.11.6.4-2)*
t	thickness of wingwall (inches)	10	
δ	wall friction angle for section AB	24	
β	angle of backfill (degrees)	26.6	
L	length of anchor (feet)	5.04	C
γ_s	unit weight of backfill (kcf)	0.120	
γ_c	unit weight of concrete (kcf)	0.150	
γ_{surch}	unit weight of surcharge (kcf)	0.125	

Element	Load Factor *(stability)*	Load Factor *(bearing)*	Unfact'd Vert Reaction (k/ft)	Unfact'd Horiz Reaction (k/ft)	Fact'd Vert Reaction (k/ft) *(stability)*	Fact'd Vert Reaction (k/ft) *(bearing)*	Fact'd Horiz Reaction (k/ft) *(stability)*	Fact'd Horiz Reaction (k/ft) *(bearing)*	Lever Arm (ft)	Sum of Unfact'd Moments (ft-k/ft)	Sum of Fact'd Moments (ft-k/ft) *(stability)*	Sum of Fact'd Moments (ft-k/ft) *(bearing)*
wall (W_w)	0.90	1.25	1.13		1.02	1.41			0.42	0.47	0.42	0.59
soil I_A	1.00	1.35	0.76		0.76	1.03			4.19	3.20	2.56	4.31
soil I_B	1.00	1.35	3.35		3.35	4.52			3.35	11.22	8.98	15.15
soil II_A	1.00	1.35	0.95		0.95	1.28			1.96	1.85	1.48	2.50
soil II_B	1.00	1.35	0.59		0.59	0.79			3.85	2.26	1.81	3.05
$W_{surcharge\ (vert)}$	1.75	1.75	0.00		0.00	0.00			3.35	0.00	0.00	0.00
Soil Pressure												
$(P_{AB})_v$	1.50	0.90	0.73		1.09	0.65			5.87	4.26	6.40	3.84
$(P_{AB})_h$	1.50	0.90		1.63			2.45	1.47	6.18	-10.09	-15.13	-9.08
$(P_{BC1})_v$	1.50	0.90	-0.18		-0.26	-0.16			4.72	-0.83	-1.25	-0.75
$(P_{BC1})_h$	1.50	0.90		0.71			1.06	0.64	1.50	-1.06	-1.59	-0.95
$(P_{BC2})_v$	1.50	0.90	-0.04		-0.07	-0.04			4.33	-0.19	-0.28	-0.17
$(P_{BC2})_h$	1.50	0.90		0.18			0.26	0.16	0.83	-0.15	-0.22	-0.13
$P_{surcharge\ (hor)}$	1.75	1.75		0.00			0.00	0.00	5.78	0.00	0.00	0.00
TOTALS =			7.28	2.51	7.42	9.48	3.77	2.26		10.95	3.17	18.36

ℓ = location of resultant = $\Sigma M / \Sigma R_v$ =

unfactored	1.50 ft
stability	0.43 ft
bearing	1.94 ft

CONTECH BRIDGE SOLUTIONS INC.

#468920-010 US ROUTE 2

ANCHOR 4

VARIABLE	DESCRIPTION OF VARIABLE	VALUE (Section AB)	VALUE (Section BC)
ϕ	internal friction angle of soil	32	32
θ	angle of wall to the y-axis	0	30
δ	wall-soil friction angle *(measured from a perpendicular with the wall)*	24	16
	= 0, if significant vibrations of backfill or modules settling more than backfill		
	= 0.5*ϕ, if modules are uniform width.		
	= 0.75*ϕ, if averaged pressure surface		
x	side slopes from road (x:1)	2.0	
α	wingwall angle (angle w/ perpendicular to road)	30	
	slope of backfill (perpendicular to wall)	2.00	
β	angle of backfill (perpendicular to wall)	26.6	26.6

$(K_a)_{AB}$ = 0.46 $(K_a)_{BC}$ = 0.16

VARIABLE	DESCRIPTION OF VARIABLE	VALUE	
H	backfill design height at anchor location (feet)	11.64	
Hw	wingwall design height at anchor location (feet)	11.64	
h_{eq}	height of live load surcharge (feet)	0.00	*(see AASHTO Table 3.11.6.4-2)*
t	thickness of wingwall (inches)	10	
δ	wall friction angle for section AB	24	
β	angle of backfill (degrees)	26.6	
L	length of anchor (feet)	6.04	D
γ_s	unit weight of backfill (kcf)	0.120	
γ_c	unit weight of concrete (kcf)	0.150	
γ_{surch}	unit weight of surcharge (kcf)	0.125	

Element	Load Factor *(stability)*	Load Factor *(bearing)*	Unfact'd Vert Reaction (k/ft)	Unfact'd Horiz Reaction (k/ft)	Fact'd Vert Reaction (k/ft) *(stability)*	Fact'd Vert Reaction (k/ft) *(bearing)*	Fact'd Horiz Reaction (k/ft) *(stability)*	Fact'd Horiz Reaction (k/ft) *(bearing)*	Lever Arm (ft)	Sum of Unfact'd Moments (ft-k/ft)	Sum of Fact'd Moments (ft-k/ft) *(stability)*	Sum of Fact'd Moments (ft-k/ft) *(bearing)*
wall (W_w)	0.90	0.90	1.46		1.31	1.31			0.42	0.61	0.55	0.55
soil I_A	1.00	1.00	1.09		1.09	1.09			4.86	5.32	4.26	5.32
soil I_B	1.00	1.00	5.90		5.90	5.90			3.85	22.74	18.19	22.74
soil II_A	1.00	1.00	1.37		1.37	1.37			2.46	3.36	2.68	3.36
soil II_B	1.00	1.00	0.59		0.59	0.59			4.85	2.84	2.27	2.84
$W_{surcharge\ (vert)}$	1.75	1.75	0.00		0.00	0.00			3.85	0.00	0.00	0.00
Soil Pressure												
$(P_{AB})_v$	1.50	1.50	1.40		2.09	2.09			6.87	9.59	14.38	14.38
$(P_{AB})_h$	1.50	1.50		3.13			4.70	4.70	7.22	-22.63	-33.94	-33.94
$(P_{BC1})_v$	1.50	1.50	-0.24		-0.37	-0.37			5.72	-1.40	-2.10	-2.10
$(P_{BC1})_h$	1.50	1.50		0.98			1.47	1.47	1.50	-1.47	-2.20	-2.20
$(P_{BC2})_v$	1.50	1.50	-0.04		-0.07	-0.07			5.33	-0.23	-0.35	-0.35
$(P_{BC2})_h$	1.50	1.50		0.18			0.26	0.26	0.83	-0.15	-0.22	-0.22
$P_{surcharge\ (hor)}$	1.75	1.75		0.00			0.00	0.00	7.33	0.00	0.00	0.00
TOTALS =			11.51	4.29	11.92	11.92	6.43	6.43		18.59	3.53	10.38

ℓ = location of resultant = $\Sigma M / \Sigma R_v$ =

unfactored	1.61 ft
stability	0.30 ft
bearing	0.87 ft

#468920-010 US ROUTE 2

STABILITY

II. CHECK STABILITY (ECCENTRICITY & SLIDING) OF WALL

Check the eccentricity of the vertical resultant of the wall above the CIP footing:

R_v = Total factored vertical reaction for anchor's wall section (using 80% of soil weight). (Refer to anchor's calculation sheet *"Factored Vertical Reaction (e & sliding)".*)

R_h = Total factored horizontal reaction for anchor's wall section. (Refer to anchor's calculation sheet *"Factored Horizonatal Reaction"* .)

ℓ = location of resultant of factored vertical forces at base of anchor (for each anchor section). (Refer to anchor's calculation sheet *"ℓ - e & sliding"* .)

e = eccentricity of resultant of factored vertical forces compared to base length

e_{max} = 0..45*base length (ℓ must be within the middle 9/10 of the base, since the precast wall sits on a CIP foundation, which is equivalent to rock. *AASHTO 11.6.3.3)*

Check eccentricity of vertical resultant at base of anchor (for each anchor section)

anchor section	base length	R_v (K/F)	R_h (K/F)	ℓ (ft)	e (ft)	check e < emax	e inside mid. 9/10?
1	2.56	2.06	0.82	0.94	0.35	***OK***	*yes*
2	2.56	3.92	1.84	0.54	0.74	***OK***	*yes*
3	3.56	7.42	3.77	0.43	1.35	***OK***	*yes*
4	4.56	11.92	6.43	0.30	1.99	***OK***	*no*

V. CHECK STABILITY AT CONNECTION PLATES

The connection plates provide stability for the portion of the wall not supported by the anchors, i.e., the section closest to the culvert.

Data:

number of plates = 2
ϕ = 32
δ = 24
γ_s = 0.120 kcf
$\gamma_{(surcharge)}$ = 0.125 kcf
soil height @ plates (H) = **13.21 ft**
Live load surcharge (h) = **0.00 ft**
section width for plates (S) = 2.0 ft
y_{Psh} = H/3 = 4.4 ft
y_{PLL} = H/2 = 6.6 ft
y_{p1} = **1.75 ft**
y_{p2} = **7.75 ft**
A_{bolt} = **0.79**
t_{plate} = **1.00 in**
(A307 -AASHTO 6.5.4.2) $\phi_{t(bolt)}$ = **0.80**
(A307 -AASHTO 6.4.3.1) $F_{u(bolt)}$ = **60 ksi**
(AASHTO 6.5.4.2) ϕ_f = **1.00**
(A36 -AASHTO Table 6.4.1-1) $F_{y(plate)}$ = **36 ksi**

Find loads (soil pressure) on section:

Because the wall is more rigid at the plates, at-rest soil pressure coefficient (K_o) is used.

$K_o = 1-\sin\phi = 0.47$ *(AASHTO eqn 3.11.5.2-1)*

$P_{sh} = (^1/_2)\gamma_s K_o H^2(S)(\cos\delta) = 8.99$ K

$P_{LLh} = K_o\gamma_s HhS(\cos\delta) = 0.00$ K

P_{bar} = S*Rail Load/L_d = 0.00 K

Find reaction at plate:

Sum moments about bottom plate, p_1

$\Sigma M_{p1DL} = 0 = P_{sh}(y_{Psh} - y_{p1}) - p_2(y_{p2} - y_{p1})$ *(dead load)*

$\Sigma M_{p1LL} = 0 = P_{LL}(y_{PLL} - y_{p1}) - p_{2LL}(y_{p2} - y_{p1})$ *(live load)*

$\Sigma M_{p1bar} = 0 = P_{bar}(y_{Pimp} - y_{p1}) - p_{2bar}(y_{p2} - y_{p1})$ *(barrier load)*

$p_{2DL} = \dfrac{P_{sh}(y_{Psh} - y_{p1})}{(y_{p2} - y_{p1})} = 3.97$ K $\qquad p_{1DL} = P_{sh} - p_{2DL} = 5.02$ K

$p_{2LL} = \dfrac{P_{LLh}(y_{pLL} - y_{p1})}{(y_{p2} - y_{p1})} = 0.00$ K $\qquad p_{1LL} = P_{LL} - p_{2LL} = 0.00$ K

$p_{2bar} = \dfrac{P_{bar}(y_{imp} - y_{p1})}{(y_{p2} - y_{p1})} = 0.00$ K $\qquad p_{1bar} = P_{bar} - p_{2bar} = 0.00$ K

$p_{2(tot)} = 3.97$ K $\qquad p_{1(tot)} = 5.02$ K Controls

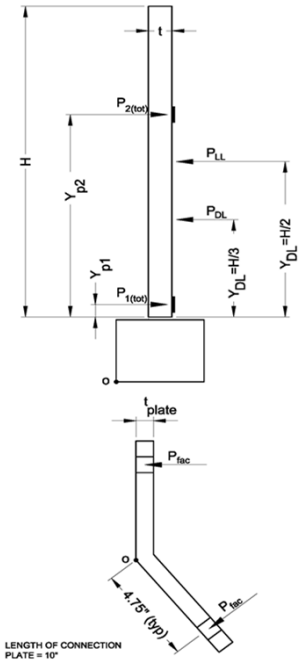

Find factored reaction:

Load factors are per AASHTO Table 3.4.1-1and AASHTO Table 3.4.1-2

$p_{u\ STR\ I} = (1.35)p_{max(DL)} + (1.75)p_{max(LL)}$

$p_{u\ EXT\ II} = (1.35)p_{max(DL)} + (0.50)p_{max(LL)} + (1.0)p_{bar}$

$p_{u\ max} = 6.77$ K

Check bolts : The special Richmond 2-bolt wingwall insert pullout capacity was obtained from the manufacturer and has approx. 3:1 safety factor. ϕTn is defined in AASHTO 6.13.2.10.2.

Pullout capacity = 16.5 k/bolt

check p_u < pullout capacity*2 bolts = *OK*

Bolt tension capacity, $\phi_t T_n = \phi 0.76 * F_{ubolt} A_{bolt}$ = 28.8 k/bolt

check $p_u < \phi_t T_n$*2 bolts = *OK*

Check bending of plate:

Find maximum bending stress in plate.

$M_u = (p_u)(4.5")$ = 30.5 k-in

$I_{pl} = bt_{plate}^3/12$ = 0.83 in^4

$F_{ult} = M_u y / I_{pl}$ = 18 ksi

check $F_{ult} < \phi_f F_y$ = *OK*

#468920-010 US ROUTE 2

VII. CHECK TYPE 'A' ANCHOR ATTACHMENT

Check capacity of connector for pullout (truncated pyramid failure), shear, tension, and combined shear & tension

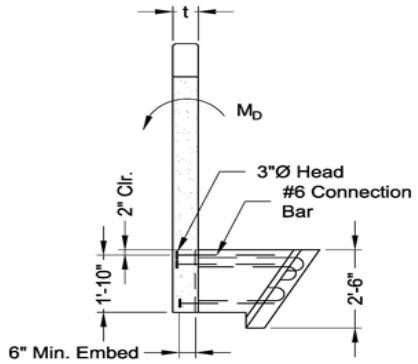

embedment depth (ℓ_e)= **6 in**

Attachment depth = 24 in

X head dimension (Xd_{head}) = 3 in

Y head dimension (Yd_{head}) = 3 in

Bar size = **# 6**

rows = **2**

row spacing = **4 in**

wall thickness (t) = 10 in

x = Xd_{head} (*since only 1 column*) = 3 in

y = (#rows-1)(row spacing) + Yd_{head} = 7 in

z = min(x,y) = 3 in

h_{min} = (z + $2\ell_e$)/2 = 7.5 in

A_R = (x+$2\ell_e$-2t)(y+$2\ell_e$-2t) = 5.0 in^2

f'_c = 5000 psi

f_y = 60000 psi

$\phi_{concrete}$ = 0.85

ϕ_{steel} = 0.90

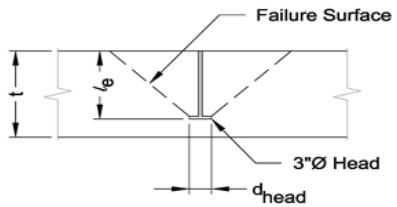

TENSION CAPACITY (Per PCI Design Handbook §6.5.2.1)

t > hmin: failure surface does not penetrate slab

Find pullout capacity of concrete

if t >= h_{min}, ϕP_c = ϕ2.67sqrt(f'c)(x+2ℓe)(y+2ℓe)

if t < h_{min}, ϕP_c = ϕ2.67sqrt(f'c)[(x+2ℓe)(y+2ℓe) - A_R]

ϕP_c = 45.74 K

Find tension capacity of studs

ϕP_y = $\phi f_y(A_{bar})$(#bars)

ϕP_y = 47.71 K

controlling tension capacity (ϕP) = 45.74 K

Find moment capacity of anchor

Moment capacity of anchor (ϕM_n) = ϕP(d-a/2)

d = attachment depth - bar cover - (y-d_{head})/2 = 20 in

a = $A_s f_y$/0.85f'_cb = 2.08 in

ϕM_n = 72.27 k-f

CONTECH BRIDGE SOLUTIONS INC.

#468920-010 US ROUTE 2

VII. CHECK TYPE 'A' ANCHOR ATTACHMENT

SHEAR CAPACITY (Per PCI Design Handbook §6.5.2.2)

Find shear capacity of concrete

$\phi V_c = \phi V'_c C_w C_t C_c$

$\phi V'_c = \phi 12.5 d_e^{1.5} \text{sqrt}(f'_c)$	= 75.6 K
$C_w = 1 + \text{spacing}/3.5d_e < \#\text{columns}$	= 1.0
$C_t = t/1.3d_e <= 1.0$	= 0.36
$C_c = 0.4 + 0.7d_c/de <= 1.0$	= 1.0
d_e = attachment depth - cover - bar dia/2	= 22 in
d_c = distance to side of wingwall (minimum)	= 36 in

$\phi V_c = \phi V'_c C_w C_t C_c =$ 26.88 K

Find shear capacity of studs

$\phi V_y = \phi 0.9 f_y A_{bar}(\#\text{bars})$

$\phi V_y =$ 42.94 K

controlling shear capacity (ϕV) = ***26.88 K***

FIND LOADS

Unfactored loads on anchors:

$M_{D(DL)}$ = (sec width)$M_{D(anchor)}$

$M_{D(LL)}$ = (sec width)($M_{D(anchor)}$ + P_{imp}*(wall ht + y_{imp}))

Factored loads:

Load factors are per AASHTO 3.4.1-1 & Table 3.4.1-2

$M_{u\ STR1} = 1.5)M_{D(DL)} + 1.75M_{D(LL)}$

$M_{u\ EXTII} = 1.5M_{D(DL)} + 0.5M_{D(LL)} + 1.0M_{(BAR)}$

$P_u = M_u$ /(d-a/2)*cos(bar angle)

$V_u = M_u$ /(d-a/2)*sin(bar angle)

bar angle = 0

anchor	$M_{D(DL)}$ K-ft	$M_{D(LL)}$ K-ft	M_{bar} K-ft	$M_{u\ STR\ I}$ K-ft	$M_{u\ EXT\ II}$	P_u K	V_u K
1	5.9	0.0	0.0	8.9	8.9	5.6	0.0
5	0.0	0.0	0.0	0.0	0.0	0.0	0.0

anchor	check $\phi M_n > M_u$	check $\phi P > P_u$	check $\phi V > V_u$	check combined V_c & P_c	check combined V_s & P_s	Check Splice	ALL CHECKS OK
1	*OK*	*OK*	*OK*	*OK*	*OK*	*OK*	*OK*
5	*n/a*	*n/a*	*n/a*	*n/a*	*n/a*	*n/a*	*n/a*

VII. CHECK TYPE 'B' ANCHOR ATTACHMENT

Check capacity of connector for pullout (truncated pyramid failure), shear, tension, and combined shear & tension

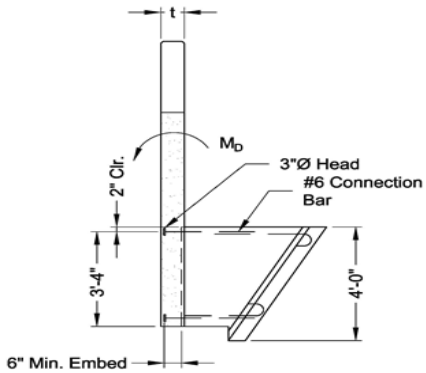

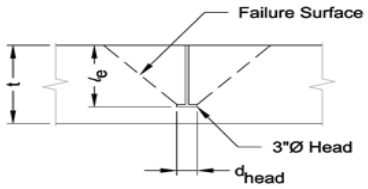

embedment depth (ℓ_e)= **6 in**

Attachment depth = 42 in

X head dimension (Xd_{head}) = 3 in

Y head dimension (Yd_{head}) = 3 in

Bar size = **# 6**

rows = **1**

row spacing = **4 in**

wall thickness (t) = 10 in

x = Xd_{head} (*since only 1 column*) = 3 in

y = (#rows-1)(row spacing) + Yd_{head} = 3 in

z = min(x,y) = 3 in

h_{min} = (z + 2ℓ_e)/2 = 7.5 in

A_R = (x+2ℓ_e-2t)(y+2ℓ_e-2t) = 25.0 in^2

f'_c = 5000 psi

f_y = 60000 psi

$\phi_{concrete}$ = 0.85

ϕ_{steel} = 0.90

TENSION CAPACITY (Per PCI Design Handbook §6.5.2.1)

t > hmin: failure surface does not penetrate slab

Find pullout capacity of concrete

if t >= h_{min}, $\phi P_c = \phi 2.67 sqrt(f'c)(x+2\ell e)(y+2\ell e)$

if t < h_{min}, $\phi P_c = \phi 2.67 sqrt(f'c)[(x+2\ell e)(y+2\ell e) - A_R]$

ϕP_c = 36.11 K

Find tension capacity of studs

$\phi P_y = \phi f_y(A_{bar})(\#bars)$

ϕP_y = 23.86 K

controlling tension capacity (ϕP) = 23.86 K

Find moment capacity of anchor

Moment capacity of anchor (ϕM_n) = $\phi P(d-a/2)$

d = attachment depth - bar cover - $(y-d_{head})/2$ = 40 in

a = $A_s f_y/0.85 f'_c b$ = 1.04 in

ϕM_n = 78.49 k-f

CONTECH BRIDGE SOLUTIONS INC.

#468920-010 US ROUTE 2

VII. CHECK TYPE 'B' ANCHOR ATTACHMENT

SHEAR CAPACITY (Per PCI Design Handbook §6.5.2.2)

Find shear capacity of concrete

$\phi V'_c = \phi 12.5 d_e^{1.5} \text{sqrt}(f'_c)$	= 187.4 K
$C_w = 1 + \text{spacing}/3.5d_e < \#\text{columns}$	= 1.0
$C_t = t/1.3d_e <= 1.0$	= 0.19
$C_c = 0.4 + 0.7d_c/de <= 1.0$	= 1.0
d_e = attachment depth - cover - bar dia/2	= 40 in
d_c = distance to side of wingwall	= 36 in

$\phi V_c = \phi V'_c C_w C_t C_c =$ 36.38 K

Find shear capacity of studs

$\phi V_y = \phi 0.9 f_y A_{bar}(\#\text{bars})$

ϕV_y = 21.47 K

controlling shear capacity (ϕV) = 21.47 K

FIND LOADS

Unfactored loads on anchors:

$M_{D(DL)}$ = (sec width)$M_{D(anchor)}$

$M_{D(LL)}$ = (sec width)($M_{D(anchor)}$ + P_{imp}*(wall ht + y_{imp}))

Factored loads:

Load factors are per AASHTO 3.4.1-1 & Table 3.4.1-2

$M_{u\ STR1} = 1.5M_{D(DL)} + 1.75M_{D(LL)}$

$M_{u\ EXTII} = 1.5M_{D(DL)} + 0.5M_{D(LL)} + 1.0M_{(BAR)}$

$P_u = M_u$ /(d-a/2)*cos(bar angle)

$V_u = M_u$ /(d-a/2)*sin(bar angle)

bar angle = 0

anchor	$M_{D(DL)}$ K-ft	$M_{D(LL)}$ K-ft	M_{bar} K-ft	$M_{u\ STR\ I}$ K-ft	$M_{u\ EXT\ II}$	P_u K	V_u K
2	19.8	0.0	0.0	29.7	29.7	9.0	0.0

anchor	check $\phi M_n > M_u$	check $\phi P > P_u$	check $\phi V > V_u$	check combined V_c & P_c	check combined V_s & P_s	Check Splice	ALL CHECKS OK
2	*OK*	*OK*	*OK*	*OK*	*OK*	*OK*	*OK*

VII. CHECK TYPE 'C' ANCHOR ATTACHMENT

Check capacity of connector for pullout (truncated pyramid failure), shear, tension, and combined shear & tension

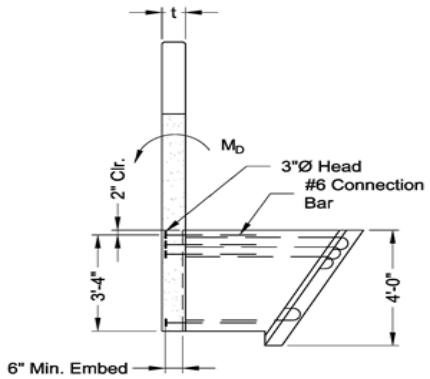

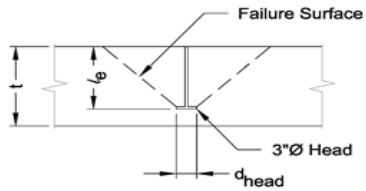

embedment depth (ℓ_e)= **6 in**

Attachment depth = 42 in
X head dimension (Xd_{head}) = 3 in
Y head dimension (Yd_{head}) = 3 in
Bar size = **# 6**
rows = **3**
row spacing = **5 in**
wall thickness (t) = 10 in
x = Xd_{head} (*since only 1 column*) = 3 in
y = (#rows-1)(row spacing) + Yd_{head} = 13 in
z = min(x,y) = 3 in
h_{min} = (z + $2\ell_e$)/2 = 7.5 in
A_R = (x+$2\ell_e$-2t)(y+$2\ell_e$-2t) = -25.0 in^2

f'_c = 5000 psi
f_y = 60000 psi
$\phi_{concrete}$ = 0.85
ϕ_{steel} = 0.90

TENSION CAPACITY (Per PCI Design Handbook §6.5.2.1)

t > hmin: failure surface does not penetrate slab

Find pullout capacity of concrete

if t >= h_{min}, ϕP_c = ϕ2.67sqrt(f'c)(x+2ℓe)(y+2ℓe)
if t < h_{min}, ϕP_c = ϕ2.67sqrt(f'c)[(x+2ℓe)(y+2ℓe) - A_R]
ϕP_c = 60.18 K

Find tension capacity of studs

ϕP_y = $\phi f_y(A_{bar})$(#bars)
ϕP_y = 71.57 K

controlling tension capacity (ϕP) = 60.18 K

Find moment capacity of anchor

Moment capacity of anchor (ϕM_n) = ϕP(d-a/2)
d = attachment depth - bar cover - (y-Yd_{head})/2 = 35 in
a = $A_s f_y$/0.85f'$_c$b = 3.12 in
ϕM_n = 167.70 k-f

CONTECH BRIDGE SOLUTIONS INC.

#468920-010 US ROUTE 2

VII. CHECK TYPE 'C' ANCHOR ATTACHMENT

SHEAR CAPACITY (Per PCI Design Handbook §6.5.2.2)

Find shear capacity of concrete

$\phi V_c = \phi V'_c C_w C_t C_c$

$\phi V'_c = \phi 12.5 d_e^{1.5} \text{sqrt}(f'_c)$	= 187.4 K
$C_w = 1 + \text{spacing}/3.5d_e < \#\text{columns}$	= 1.0
$C_t = t/1.3d_e <= 1.0$	= 0.19
$C_c = 0.4 + 0.7d_c/de <= 1.0$	= 1.0
d_e = attachment depth - cover - bar dia/2	= 40 in
d_c = distance to side of wingwall	= 36 in

$\phi V_c = \phi V'_c C_w C_t C_c =$ 36.38 K

Find shear capacity of studs

$\phi V_y = \phi 0.9 f_y A_{bar}(\#\text{bars})$

$\phi V_y =$ 64.41 K

controlling shear capacity (ϕV) = 36.38 K

FIND LOADS

Unfactored loads on anchors:

$M_{D(DL)}$ = (sec width)$M_{D(anchor)}$

$M_{D(LL)}$ = (sec width)($M_{D(anchor)}$ + P_{imp}*(wall ht + y_{imp}))

Factored loads:

Load factors are per AASHTO 3.4.1-1 & Table 3.4.1-2

$M_{u\ STR1} = 1.5M_{D(DL)} + 1.75M_{D(LL)}$

$M_{u\ EXTII} = 1.5M_{D(DL)} + 0.5M_{D(LL)} + 1.0M_{(BAR)}$

$P_u = M_u$ /(d-a/2)*cos(bar angle)

$V_u = M_u$ /(d-a/2)*sin(bar angle)

bar angle = 0

anchor	$M_{D(DL)}$ K-ft	$M_{D(LL)}$ K-ft	M_{bar} K-ft	$M_{u\ STR\ I}$ K-ft	$M_{u\ EXT\ II}$	P_u K	V_u K
3	56.5	0.0	0.0	84.7	84.7	30.4	0.0
5	0.0	0.0	0.0	0.0	0.0	0.0	0.0

anchor	check $\phi M_n > M_u$	check $\phi P > P_u$	check $\phi V > V_u$	check combined V_c & P_c	check combined V_s & P_s	Check Splice	ALL CHECKS OK
3	*OK*	*OK*	*OK*	*OK*	*OK*	*OK*	*OK*
5	*OK*	*OK*	*OK*	*OK*	*OK*	*OK*	

VII. CHECK TYPE 'D' ANCHOR ATTACHMENT

VI. CHECK TYPE 'D' ANCHOR ATTACHMENT

Check capacity of connector for pullout (truncated pyramid failure), shear, tension, and combined shear & tension

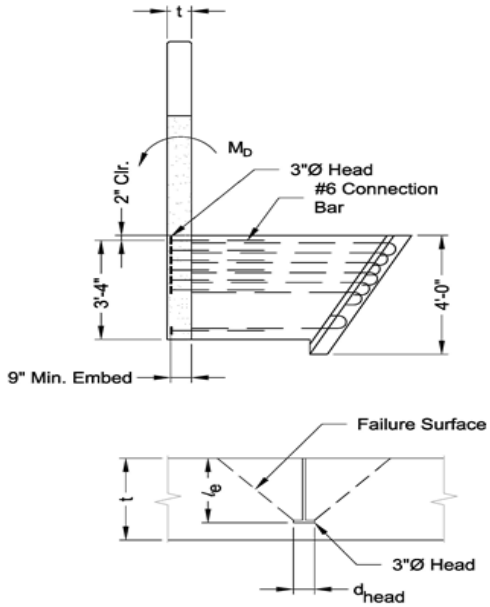

embedment depth (ℓ_e)= **9 in**

Attachment depth = 42 in
X head dimension (Xd_{head}) = 3 in
Y head dimension (Yd_{head}) = 3 in
Bar size = **# 6**
rows = **6**
row spacing = **4 in**
wall thickness (t) = 10 in
x = Xd_{head} (*since only 1 column*) = 3 in
y = (#rows-1)(row spacing) + Yd_{head} = 23 in
z = min(x,y) = 3 in
h_{min} = (z + 2ℓ_e)/2 = 10.5 in
A_R = (x+2ℓ_e-2t)(y+2ℓ_e-2t) = 21.0 in^2

f'_c = 5000 psi
f_y = 60000 psi
$\phi_{concrete}$ = 0.85
ϕ_{steel} = 0.90

TENSION CAPACITY (Per PCI Design Handbook §6.5.2.1)

t < hmin: failure surface penetrates slab

Find pullout capacity of concrete

if t >= h_{min}, ϕP_c = ϕ2.67sqrt(f'c)(x+2ℓe)(y+2ℓe)
if t < h_{min}, ϕP_c = ϕ2.67sqrt(f'c)[(x+2ℓe)(y+2ℓe) - A_R]
ϕP_c = 134.80 K

Find tension capacity of studs

ϕP_y = $\phi f_y(A_{bar})$(#bars)
ϕP_y = 143.14 K

controlling tension capacity (ϕP) = 134.80 K

Find moment capacity of anchor

Moment capacity of anchor (ϕM_n) = ϕP(d-a/2)
d = attachment depth - bar cover - (y-Yd_{head})/2 = 30 in
a = $A_s f_y$/0.85f'$_c$b = 6.24 in
ϕM_n = 301.97 k-f

CONTECH BRIDGE SOLUTIONS INC.

#468920-010 US ROUTE 2

VII. CHECK TYPE 'D' ANCHOR ATTACHMENT

SHEAR CAPACITY (Per PCI Design Handbook §6.5.2.2)

Find shear capacity of concrete

$\phi V_c = \phi V'_c C_w C_t C_c$

$\phi V'_c = \phi 12.5 d_e^{1.5} \text{sqrt}(f'_c)$	= 187.4 K
$C_w = 1 + \text{spacing}/3.5d_e < \#\text{columns}$	= 1.0
$C_t = t/1.3d_e <= 1.0$	= 0.19
$C_c = 0.4 + 0.7d_c/de <= 1.0$	= 1.0
d_e = attachment depth - cover - bar dia/2	= 40 in
d_c = distance to side of wingwall	= 36 in

$\phi V_c = \phi V'_c C_w C_t C_c =$ 36.38 K

Find shear capacity of studs

$\phi V_y = \phi 0.9 f_y A_{bar} (\#\text{bars})$

ϕV_y = 128.82 K

controlling shear capacity (ϕV) = 36.38 K

FIND LOADS

Unfactored loads on anchors:

$M_{D(DL)}$ = (sec width)$M_{D(anchor)}$

$M_{D(LL)}$ = (sec width)($M_{D(anchor)}$ + P_{imp}*(wall ht + y_{imp}))

Factored loads:

Load factors are per AASHTO 3.4.1-1 & Table 3.4.1-2

$M_{u\ STR1} = 1.5M_{D(DL)} + 1.75M_{D(LL)}$

$M_{u\ EXTII} = 1.5M_{D(DL)} + 0.5M_{D(LL)} + 1.0M_{(BAR)}$

$P_u = M_u$ /(d-a/2)*cos(bar angle)

$V_u = M_u$ /(d-a/2)*sin(bar angle)

bar angle = 0

anchor	$M_{D(DL)}$ K-ft	$M_{D(LL)}$ K-ft	M_{bar} K-ft	$M_{u\ STR\ I}$ K-ft	$M_{u\ EXT\ II}$	P_u K	V_u K
4	109.1	0.0	0.0	163.6	163.6	73.0	0.0

anchor	Check $\phi M_n > M_u$	Check $\phi P > P_u$	Check $\phi V > V_u$	Check V_c & P_c	Check V_s & P_s	Check Splice	ALL CHECKS OK
4	*OK*	*OK*	*OK*	*OK*	*OK*	*OK*	*OK*

HITEC-METHOD LRFD WINGWALL CALCULATIONS

PROJECT NUMBER: 468920-010
PROJECT NAME: US ROUTE 2
DATE: Dec 9, 2015
BY: KDK

WINGWALL LABEL WW3

INPUT PARAMETERS:

Wall geometry

Panel Height (high) = 13.22 ft
Panel Height (low) = 8.79 ft
Soil Ht Below Wall= 0.00 ft
Wall Panel Length = 18.18 ft
Entire Wall length = 18.18 ft
Length of flat = 1.00 ft
Total wall thickness = 12 in
Formliner relief = 0.0 in
Structural Wall Thickness = 12.00 in
Wingwall Drop (high-low) = 4.43 ft
Wall slope = 0.2577
Max fill ht. (t/road to b/ww) = 24.00 ft
Fill Slope (perp. to road) = 1.8
Wall angle (perp. to road) = 75
Fill slope (perp. to wall) = 1.86

Wingwall properties

Wingwall Panel Connected to arch unit = ☑
Surcharge on plate Y/N = ☐
Hooked Bars = ☐
epoxy coated = ☐
Precast Foundations = ☐

Connection Plates

plates= 2
Check bolt: OK
Check plate: OK
Plate Stress = 23.7 psi

Soil properties

γ_{soil} = 120 pcf
γ_{conc} = 150 pcf
$\gamma_{LLsurcharge}$ = 125 pcf
ϕ_{AB} = 32
θ_{AB} = 0
δ_{AB} = 24
ϕ_{BC} = 32
θ_{BC} = 30
δ_{BC} = 16

Concrete properties

f'_c = 5000 psi
fy = 60000 psi

YP2= 6.00 ft
YP1= 21 in

Foundation

BY OTHERS

Impact loading

Barrier Type = NONE
Loading Type = NO IMPACT
Impact load = 0.00 K
Distance from Top of Pavement =
Distribution Width = 10.66 ft

Liveload Surcharge

Surcharge = ☐ 0.00 ft

Vertical wall reinforcement

Grouped Rebar
Grouped Rebar = 2 - # 7
Check A_s: OK
Check Vu: OK

	Distance to Anchor	Overriding perp. Slope at Anchor	Wall height at Anchor	Contrib. Width	Perp. slope used at Anchor	h_{eq} LL Surch	Anchor Type	Check Bearing of Footing	Check 'e' of wall on top of footing	Check Sliding
Anchor #1	3.00 ft	N	9.56 ft	5.500 ft	1.86	0.00 ft	D		OK	
Anchor #2	8.00 ft	N	10.85 ft	5.000 ft	1.86	0.00 ft	E		OK	
Anchor #3	13.00 ft	N	12.14 ft	5.090 ft	1.86	0.00 ft	E		OK	

1. Wingwall calculations are done in accordance with the current edition of the AASHTO LRFD Bridge Design Specifications.
2. Moments are summed about the toe (face) of the wingwall (point "o" on "Pressure Diagram").
3. Ka is calculated using equation found in former AASHTO Standard Specifications Figure 5.9.2A (same as current AASHTO Standa Specifications Figure 5.5.2A, with q defined using a different reference line.)

$$\frac{\cos^2(\phi+\theta)}{\cos^2\theta\cos(\theta-\delta)\left[1+\sqrt{\frac{\sin(\phi+\delta)\sin(\phi-\beta)}{\cos(\theta-\delta)\cos(\theta+\beta)}}\right]^2}$$

4. Only 80% of the soil unit weight is used for the eccentricity/ stability calculation. This is a conservative assumption as explained HITEC report "Evaluation of the CON/SPAN® Wingwall System"
5. The full 100% of the soil unit weight is used for the bearing calculations.
6. These calculations conservatively assume that the wall anchor has the same unit weight as soil.
7. The wingwall angle (in plan view) is measured from perpendicular to roadway.
8. Barrier loads are distributed per AASHTO LRFD Specifications Section 3.24.5.2.

PRESSURE DIAGRAM FOR WINGWALL ANCHOR STABILITY CALCULATIONS

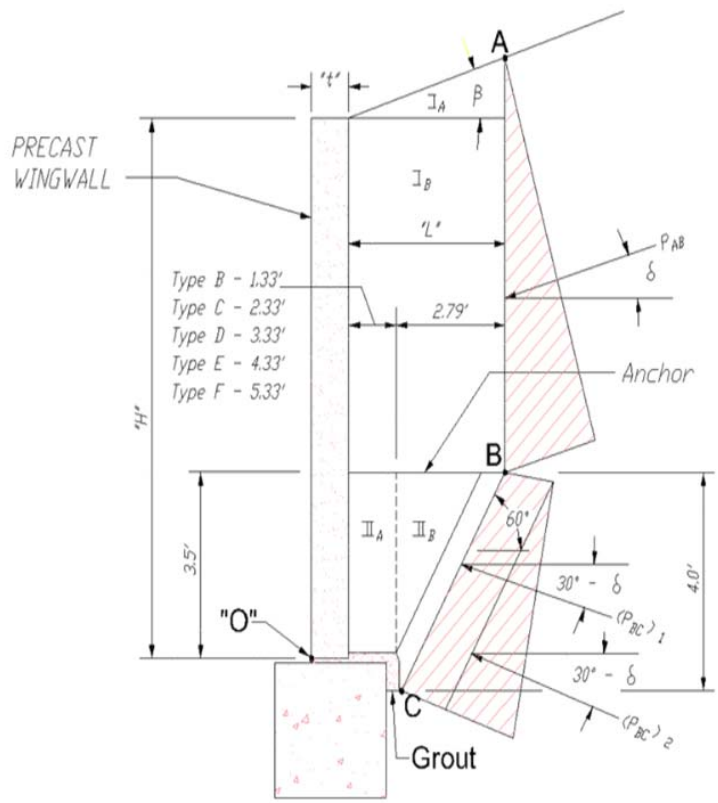

CONTECH BRIDGE SOLUTIONS INC.

#468920-010 US ROUTE 2

ANCHOR 1

VARIABLE	DESCRIPTION OF VARIABLE	VALUE (Section AB)	VALUE (Section BC)
ϕ	internal friction angle of soil	32	32
θ	angle of wall to the y-axis	0	30
δ	wall-soil friction angle *(measured from a perpendicular with the wall)*	24	16
	= 0, if significant vibrations of backfill or modules settling more than backfill		
	= 0.5*ϕ, if modules are uniform width.		
	= 0.75*ϕ, if averaged pressure surface		
x	side slopes from road (x:1)	1.8	
α	wingwall angle (angle w/ perpendicular to road)	75	
	slope of backfill (perpendicular to wall)	1.86	
β	angle of backfill (perpendicular to wall)	28.2	28.2

$(K_a)_{AB}$ = 0.50 $(K_a)_{BC}$ = 0.18

VARIABLE	DESCRIPTION OF VARIABLE	VALUE	
H	backfill design height at anchor location (feet)	9.56	
Hw	wingwall design height at anchor location (feet)	9.56	
h_{eq}	height of live load surcharge (feet)	0.00	*(see AASHTO Table 3.11.6.4-2)*
t	thickness of wingwall (inches)	12	
δ	wall friction angle for section AB	24	
β	angle of backfill (degrees)	28.2	
L	length of anchor (feet)	6.04	D
γ_s	unit weight of backfill (kcf)	0.120	
γ_c	unit weight of concrete (kcf)	0.150	
γ_{surch}	unit weight of surcharge (kcf)	0.125	

Element	Load Factor *(stability)*	Load Factor *(bearing)*	Unfact'd Vert Reaction (k/ft)	Unfact'd Horiz Reaction (k/ft)	Fact'd Vert Reaction (k/ft) *(stability)*	Fact'd Vert Reaction (k/ft) *(bearing)*	Fact'd Horiz Reaction (k/ft) *(stability)*	Fact'd Horiz Reaction (k/ft) *(bearing)*	Lever Arm (ft)	Sum of Unfact'd Moments (ft-k/ft)	Sum of Fact'd Moments (ft-k/ft) *(stability)*	Sum of Fact'd Moments (ft-k/ft) *(bearing)*
wall (W_w)	0.90	1.25	1.43		1.29	1.79			0.50	0.72	0.65	0.90
soil I_A	1.00	1.35	1.17		1.17	1.59			5.03	5.90	4.72	7.97
soil I_B	1.00	1.35	4.40		4.40	5.93			4.02	17.67	14.14	23.86
soil II_A	1.00	1.35	1.37		1.37	1.84			2.63	3.58	2.87	4.84
soil II_B	1.00	1.35	0.59		0.59	0.79			5.02	2.94	2.35	3.97
$W_{surcharge\ (vert)}$	1.75	1.75	0.00		0.00	0.00			4.02	0.00	0.00	0.00
Soil Pressure												
$(P_{AB})_v$	1.50	0.90	1.05		1.57	0.94			7.04	7.37	11.06	6.63
$(P_{AB})_h$	1.50	0.90		2.35			3.53	2.12	6.60	-15.53	-23.29	-13.97
$(P_{BC1})_v$	1.50	0.90	-0.22		-0.33	-0.20			5.89	-1.30	-1.95	-1.17
$(P_{BC1})_h$	1.50	0.90		0.88			1.33	0.80	1.50	-1.33	-1.99	-1.19
$(P_{BC2})_v$	1.50	0.90	-0.05		-0.07	-0.04			5.50	-0.26	-0.39	-0.23
$(P_{BC2})_h$	1.50	0.90		0.19			0.28	0.17	0.83	-0.16	-0.24	-0.14
$P_{surcharge\ (hor)}$	1.75	1.75		0.00			0.00	0.00	6.40	0.00	0.00	0.00
TOTALS =			9.74	3.43	9.98	12.65	5.14	3.08		19.62	7.93	31.46

ℓ = location of resultant = $\Sigma M / \Sigma R_v$ =

unfactored	2.02 ft
stability	0.79 ft
bearing	2.49 ft

CONTECH BRIDGE SOLUTIONS INC.

#468920-010 US ROUTE 2

ANCHOR 2

VARIABLE	DESCRIPTION OF VARIABLE	VALUE (Section AB)	VALUE (Section BC)
ϕ	internal friction angle of soil	32	32
θ	angle of wall to the y-axis	0	30
δ	wall-soil friction angle *(measured from a perpendicular with the wall)*	24	16
	= 0, if significant vibrations of backfill or modules settling more than backfill		
	= 0.5*ϕ, if modules are uniform width.		
	= 0.75*ϕ, if averaged pressure surface		
x	side slopes from road (x:1)	1.8	
α	wingwall angle (angle w/ perpendicular to road)	75	
	slope of backfill (perpendicular to wall)	1.86	
β	angle of backfill (perpendicular to wall)	28.2	28.2

$(K_a)_{AB}$ = 0.50 $(K_a)_{BC}$ = 0.18

VARIABLE	DESCRIPTION OF VARIABLE	VALUE	
H	backfill design height at anchor location (feet)	10.85	
Hw	wingwall design height at anchor location (feet)	10.85	
h_{eq}	height of live load surcharge (feet)	0.00	*(see AASHTO Table 3.11.6.4-2)*
t	thickness of wingwall (inches)	12	
δ	wall friction angle for section AB	24	
β	angle of backfill (degrees)	28.2	
L	length of anchor (feet)	7.04	E
γ_s	unit weight of backfill (kcf)	0.120	
γ_c	unit weight of concrete (kcf)	0.150	
γ_{surch}	unit weight of surcharge (kcf)	0.125	

Element	Load Factor *(stability)*	Load Factor *(bearing)*	Unfact'd Vert Reaction (k/ft)	Unfact'd Horiz Reaction (k/ft)	Fact'd Vert Reaction (k/ft) *(stability)*	Fact'd Vert Reaction (k/ft) *(bearing)*	Fact'd Horiz Reaction (k/ft) *(stability)*	Fact'd Horiz Reaction (k/ft) *(bearing)*	Lever Arm (ft)	Sum of Unfact'd Moments (ft-k/ft)	Sum of Fact'd Moments (ft-k/ft) *(stability)*	Sum of Fact'd Moments (ft-k/ft) *(bearing)*
wall (W_w)	0.90	1.25	1.63		1.47	2.03			0.50	0.81	0.73	1.02
soil I_A	1.00	1.35	1.60		1.60	2.15			5.69	9.09	7.27	12.27
soil I_B	1.00	1.35	6.21		6.21	8.39			4.52	28.08	22.46	37.91
soil II_A	1.00	1.35	1.79		1.79	2.41			3.13	5.58	4.46	7.53
soil II_B	1.00	1.35	0.59		0.59	0.79			6.02	3.53	2.82	4.76
$W_{surcharge\ (vert)}$	1.75	1.75	0.00		0.00	0.00			4.52	0.00	0.00	0.00
Soil Pressure												
$(P_{AB})_v$	1.50	0.90	1.50		2.25	1.35			8.04	12.04	18.06	10.84
$(P_{AB})_h$	1.50	0.90		3.36			5.05	3.03	7.21	-24.26	-36.39	-21.83
$(P_{BC1})_v$	1.50	0.90	-0.26		-0.40	-0.24			6.89	-1.82	-2.72	-1.63
$(P_{BC1})_h$	1.50	0.90		1.06			1.59	0.95	1.50	-1.59	-2.38	-1.43
$(P_{BC2})_v$	1.50	0.90	-0.05		-0.07	-0.04			6.50	-0.31	-0.46	-0.28
$(P_{BC2})_h$	1.50	0.90		0.19			0.28	0.17	0.83	-0.16	-0.24	-0.14
$P_{surcharge\ (hor)}$	1.75	1.75		0.00			0.00	0.00	7.32	0.00	0.00	0.00
TOTALS =			12.99	4.61	13.42	16.84	6.92	4.15		31.00	13.62	49.01

ℓ = location of resultant = $\Sigma M / \Sigma R_v$ =

unfactored	2.39 ft
stability	1.01 ft
bearing	2.91 ft

CONTECH BRIDGE SOLUTIONS INC.

#468920-010 US ROUTE 2

ANCHOR 3

VARIABLE	DESCRIPTION OF VARIABLE	VALUE (Section AB)	VALUE (Section BC)
ϕ	internal friction angle of soil	32	32
θ	angle of wall to the y-axis	0	30
δ	wall-soil friction angle *(measured from a perpendicular with the wall)*	24	16
	= 0, if significant vibrations of backfill or modules settling more than backfill		
	= 0.5*ϕ, if modules are uniform width.		
	= 0.75*ϕ, if averaged pressure surface		
x	side slopes from road (x:1)	1.8	
α	wingwall angle (angle w/ perpendicular to road)	75	
	slope of backfill (perpendicular to wall)	1.86	
β	angle of backfill (perpendicular to wall)	28.2	28.2

$(K_a)_{AB}$ = 0.50 $(K_a)_{BC}$ = 0.18

VARIABLE	DESCRIPTION OF VARIABLE	VALUE	
H	backfill design height at anchor location (feet)	12.14	
Hw	wingwall design height at anchor location (feet)	12.14	
h_{eq}	height of live load surcharge (feet)	0.00	*(see AASHTO Table 3.11.6.4-2)*
t	thickness of wingwall (inches)	12	
δ	wall friction angle for section AB	24	
β	angle of backfill (degrees)	28.2	
L	length of anchor (feet)	7.04	E
γ_s	unit weight of backfill (kcf)	0.120	
γ_c	unit weight of concrete (kcf)	0.150	
γ_{surch}	unit weight of surcharge (kcf)	0.125	

Element	Load Factor *(stability)*	Load Factor *(bearing)*	Unfact'd Vert Reaction (k/ft)	Unfact'd Horiz Reaction (k/ft)	Fact'd Vert Reaction (k/ft) *(stability)*	Fact'd Vert Reaction (k/ft) *(bearing)*	Fact'd Horiz Reaction (k/ft) *(stability)*	Fact'd Horiz Reaction (k/ft) *(bearing)*	Lever Arm (ft)	Sum of Unfact'd Moments (ft-k/ft)	Sum of Fact'd Moments (ft-k/ft) *(stability)*	Sum of Fact'd Moments (ft-k/ft) *(bearing)*
wall (W_w)	0.90	1.25	1.82		1.64	2.28			0.50	0.91	0.82	1.14
soil I_A	1.00	1.35	1.60		1.60	2.15			5.69	9.09	7.27	12.27
soil I_B	1.00	1.35	7.30		7.30	9.86			4.52	33.00	26.40	44.55
soil II_A	1.00	1.35	1.79		1.79	2.41			3.13	5.58	4.46	7.53
soil II_B	1.00	1.35	0.59		0.59	0.79			6.02	3.53	2.82	4.76
$W_{surcharge\ (vert)}$	1.75	1.75	0.00		0.00	0.00			4.52	0.00	0.00	0.00
Soil Pressure												
$(P_{AB})_v$	1.50	1.50	1.86		2.80	2.80			8.04	14.99	22.49	22.49
$(P_{AB})_h$	1.50	1.50		4.19			6.28	6.28	7.64	-32.00	-48.00	-48.00
$(P_{BC1})_v$	1.50	1.50	-0.29		-0.44	-0.44			6.89	-2.03	-3.04	-3.04
$(P_{BC1})_h$	1.50	1.50		1.18			1.77	1.77	1.50	-1.77	-2.65	-2.65
$(P_{BC2})_v$	1.50	1.50	-0.05		-0.07	-0.07			6.50	-0.31	-0.46	-0.46
$(P_{BC2})_h$	1.50	1.50		0.19			0.28	0.28	0.83	-0.16	-0.24	-0.24
$P_{surcharge\ (hor)}$	1.75	1.75		0.00			0.00	0.00	7.96	0.00	0.00	0.00
TOTALS =			14.61	5.56	15.19	19.77	8.34	8.34		30.83	9.87	38.34

ℓ = location of resultant = $\Sigma M / \Sigma R_v$ =

unfactored	2.11 ft
stability	0.65 ft
bearing	1.94 ft

#468920-010 US ROUTE 2

STABILITY

II. CHECK STABILITY (ECCENTRICITY & SLIDING) OF WALL

Check the eccentricity of the vertical resultant of the wall above the CIP footing:

R_v = Total factored vertical reaction for anchor's wall section (using 80% of soil weight). (Refer to anchor's calculation sheet *"Factored Vertical Reaction (e & sliding)".*)

R_h = Total factored horizontal reaction for anchor's wall section. (Refer to anchor's calculation sheet *"Factored Horizonatal Reaction"* .)

ℓ = location of resultant of factored vertical forces at base of anchor (for each anchor section). (Refer to anchor's calculation sheet *"ℓ - e & sliding"* .)

e = eccentricity of resultant of factored vertical forces compared to base length

e_{max} = 0..45*base length (ℓ must be within the middle 9/10 of the base, since the precast wall sits on a CIP foundation, which is equivalent to rock. *AASHTO 11.6.3.3)*

Check eccentricity of vertical resultant at base of anchor (for each anchor section)

anchor section	base length	R_v (K/F)	R_h (K/F)	ℓ (ft)	e (ft)	check e < emax	e inside mid. 9/10?
1	4.73	9.98	5.14	0.79	1.57	***OK***	*yes*
2	5.73	13.42	6.92	1.01	1.85	***OK***	*yes*
3	5.73	15.19	8.34	0.65	2.22	***OK***	*yes*

V. CHECK STABILITY AT CONNECTION PLATES

The connection plates provide stability for the portion of the wall not supported by the anchors, i.e., the section closest to the culvert.

Data:

number of plates = 2

ϕ = 32

δ = 24

γ_s = 0.120 kcf

$\gamma_{(surcharge)}$ = 0.125 kcf

soil height @ plates (H) = **13.22 ft**

Live load surcharge (h) = **0.00 ft**

section width for plates (S) = 2.6 ft

y_{Psh} = H/3 = 4.4 ft

y_{PLL} = H/2 = 6.6 ft

y_{p1} = **1.75 ft**

y_{p2} = **7.75 ft**

A_{bolt} = **0.79**

t_{plate} = **1.00 in**

(A307 -AASHTO 6.5.4.2) $\phi_{t(bolt)}$ = **0.80**

(A307 -AASHTO 6.4.3.1) $F_{u(bolt)}$ = **60 ksi**

(AASHTO 6.5.4.2) ϕ_f = **1.00**

(A36 -AASHTO Table 6.4.1-1) $F_{y(plate)}$ = **36 ksi**

Find loads (soil pressure) on section:

Because the wall is more rigid at the plates, at-rest soil pressure coefficient (K_o) is used.

$K_o = 1\text{-}\sin\phi = 0.47$ *(AASHTO eqn 3.11.5.2-1)*

$P_{sh} = (^1/_2)\gamma_s K_o H^2(S)(\cos\delta) = 11.66$ K

$P_{LLh} = K_o\gamma_s HhS(\cos\delta) = 0.00$ K

P_{bar} = S*Rail Load/L_d = 0.00 K

Find reaction at plate:

Sum moments about bottom plate, p_1

$\Sigma M_{p1DL} = 0 = P_{sh}(y_{Psh} - y_{p1}) - p_2(y_{p2} - y_{p1})$ *(dead load)*

$\Sigma M_{p1LL} = 0 = P_{LL}(y_{PLL} - y_{p1}) - p_{2LL}(y_{p2} - y_{p1})$ *(live load)*

$\Sigma M_{p1bar} = 0 = P_{bar}(y_{Pimp} - y_{p1}) - p_{2bar}(y_{p2} - y_{p1})$ *(barrier load)*

$p_{2DL} = \dfrac{P_{sh}(y_{Psh} - y_{p1})}{(y_{p2} - y_{p1})} = 5.16$ K $\qquad p_{1DL} = P_{sh} - p_{2DL} = 6.50$ K

$p_{2LL} = \dfrac{P_{LLh}(y_{pLL} - y_{p1})}{(y_{p2} - y_{p1})} = 0.00$ K $\qquad p_{1LL} = P_{LL} - p_{2LL} = 0.00$ K

$p_{2bar} = \dfrac{P_{bar}(y_{imp} - y_{p1})}{(y_{p2} - y_{p1})} = 0.00$ K $\qquad p_{1bar} = P_{bar} - p_{2bar} = 0.00$ K

$p_{2(tot)} = 5.16$ K $\qquad p_{1(tot)} = 6.50$ K Controls

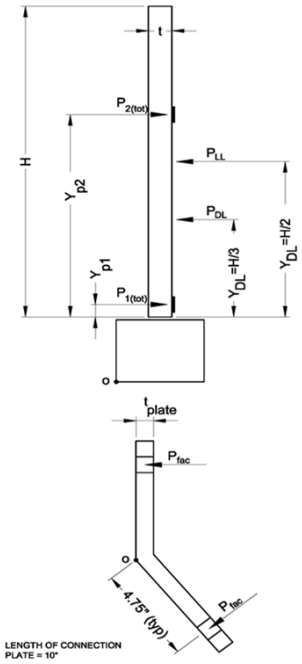

Find factored reaction:

Load factors are per AASHTO Table 3.4.1-1and AASHTO Table 3.4.1-2

$p_{u\ STR\ I} = (1.35)p_{max(DL)} + (1.75)p_{max(LL)}$

$p_{u\ EXT\ II} = (1.35)p_{max(DL)} + (0.50)p_{max(LL)} + (1.0)p_{bar}$

$p_{u\ max} = 8.77$ K

Check bolts :

The special Richmond 2-bolt wingwall insert pullout capacity was obtained from the manufacturer and has approx. 3:1 safety factor. ϕTn is defined in AASHTO 6.13.2.10.2.

Pullout capacity = 16.5 k/bolt

check p_u < pullout capacity*2 bolts = *OK*

Bolt tension capacity, $\phi_t T_n = \phi 0.76 * F_{ubolt} A_{bolt}$ = 28.8 k/bolt

check $p_u < \phi_t T_n$*2 bolts = *OK*

Check bending of plate:

Find maximum bending stress in plate.

$M_u = (p_u)(4.5") = 39.5$ k-in

$I_{pl} = bt_{plate}^3/12 = 0.83$ in^4

$F_{ult} = M_u y / I_{pl} = 24$ ksi

check $F_{ult} < \phi_f F_y$ = *OK*

V. CHECK WALL SECTION - BENDING AND SHEAR (vertical bars)

Assumptions: *1. Wall stem is cantilevered from anchor*
2. Use active earth pressure because wall can deflect at top.
3. Critical Wall section will be at maximum horizontal load

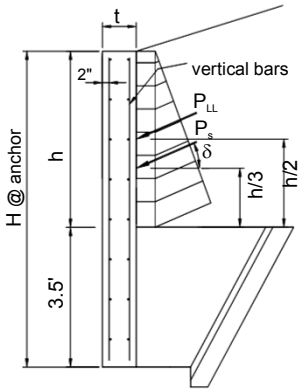

Horizontal loads:

$P_{sh} = (^1/_2)\gamma_s K_a h^2(\cos\delta)$

$P_{LLh} = \gamma_s K_a h(h_{surcharge})(\cos\delta)$

$P_{impact} = P_{imp}/L_{distr}$

Factored forces:

Load factors are per AASHTO Table 3.4.1-1and AASHTO Table 3.4.1-2

$M_{u\ Strength\ I}$ = Section width*[(1.5)P_{sh}·(h/3) + (1.75)P_{LLh}·(h/2)

$M_{u\ Ext\ II}$ = Section Width*[1.50P_{sh}·(h/3) + 0.50P_{LLh}·(h/2) + 1.00P_{imp}·(h+h_{rail})]

$V_{u\ Strength\ I}$ = Section Width* (1.50)P_{sh} + (1.75)P_{LLh}

$V_{u\ Ext\ II}$ = Section Width*[1.50P_{sh} + 0.50P_{LLh} + 1.00P_{imp}]

Summary of forces at anchors

anchor	H (ft)	h (ft)	$h_{surcharge}$ (ft)	P_{sh} (k/ft)	P_{LLh} (k/ft)	P_{imp} (k/ft)	$M_{u\ Strength\ 1}$ (k-ft)	$M_{u\ Ext.\ II}$ (k-ft)	$V_{u\ strength\ I}$ (k)	$V_{u\ ext\ I}$ (k)
1	9.56	6.06	0.00	1.00	0.00	0.00	16.66	16.66	8.24	8.24
2	10.85	7.35	0.00	1.47	0.00	0.00	26.99	26.99	11.01	11.01
3	12.14	8.64	0.00	2.03	0.00	0.00	44.60	44.60	15.48	15.48

Check bending (reinforcment) at anchors

f'_c = **5000 psi**

f_y = **60000 psi**

ϕ_b = **0.9** *(AASHTO 5.5.4.2.1)*

m = $f_y/0.85f'_c$ = 14.12

b = anchor's contrib. width

β = 0.8

$$R_u = \frac{M_u}{\phi_b b d^2}$$

$$\rho_{reqd} = \frac{1}{m}\left(1-\sqrt{1-\frac{2mR_u}{f_y}}\right)$$

ρ_{cr} *(steel ratio required to achieve 1.2Mcr, per AASHTO 5.7.3.3.2)*

$1.33\rho_{min}$ *(steel ratio required to achieve 1.33 times the factored moment strength per*

$\rho_{req'd}$ *(actual steel ratio is the minimum of the requirements of AASHTO 5.7.3.3.2, or rstrength)*

anchor	R_u (psi)	$\rho_{strength}$	ρ_{cr}	$1.33\rho_{strength}$	$\rho_{required}$	$A_{s\ min}$ (in2)	Bar Size	number of bars	$A_{s\ actual}$ (in2)	check
	37	0.0006	0.0027	0.0008	0.0008	0.52	#7 bars	2	1.92	***OK***
	66	0.0011	0.0027	0.0015	0.0015	0.84	#7 bars	4	3.06	***OK***
	106	0.0018	0.0027	0.0024	0.0024	1.40	#7 bars	4	3.07	***OK***

V. CHECK WALL SECTION - BENDING AND SHEAR (vertical bars)

Check shear

According to AASHTO 5.8.2.4, shear reinforcement is not required if $V_u < (0.5)\,\phi V_c$

$$\phi V_c = \phi_v\, 0.0316\ \beta \sqrt{f'_c}\, bd$$ *(AASHTO eq'n 5.8.3.3-3)*

anchor	ϕV_c	check Vu <0.5 ϕVc
1	78.55	***OK***
2	70.23	***OK***
3	71.53	***OK***

anchor	a	β	c	ϕMn	check Mu < ϕMn
1	0.41	0.80	0.51	80.75	***OK***
2	0.72	0.80	0.90	126.53	***OK***
3	0.71	0.80	0.89	127.08	***OK***

VII. CHECK TYPE 'D' ANCHOR ATTACHMENT

VI. CHECK TYPE 'D' ANCHOR ATTACHMENT

Check capacity of connector for pullout (truncated pyramid failure), shear, tension, and combined shear & tension

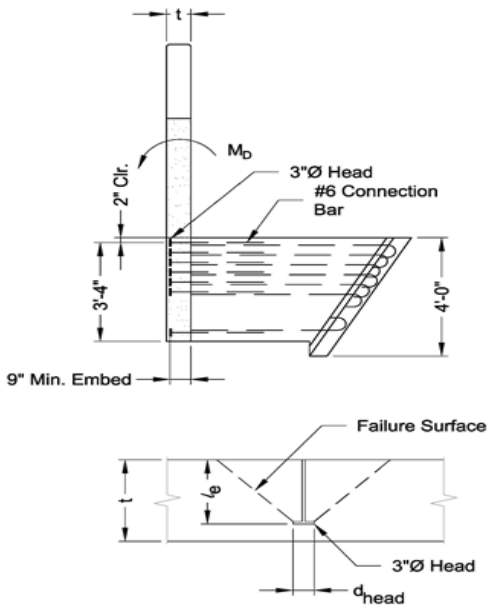

embedment depth (ℓ_e)= **9 in**

Attachment depth = 42 in
X head dimension (Xd_{head}) = 3 in
Y head dimension (Yd_{head}) = 3 in
Bar size = **# 6**
rows = **6**
row spacing = **4 in**
wall thickness (t) = 12 in
x = Xd_{head} (*since only 1 column*) = 3 in
y = (#rows-1)(row spacing) + Yd_{head} = 23 in
z = min(x,y) = 3 in
h_{min} = (z + 2ℓ_e)/2 = 10.5 in
A_R = (x+2ℓ_e-2t)(y+2ℓ_e-2t) = -51.0 in^2

f'_c = 5000 psi
f_y = 60000 psi
$\phi_{concrete}$ = 0.85
ϕ_{steel} = 0.90

TENSION CAPACITY (Per PCI Design Handbook §6.5.2.1)

t > hmin: failure surface does not penetrate slab

Find pullout capacity of concrete

if t >= h_{min}, ϕP_c = ϕ2.67sqrt(f'c)(x+2ℓe)(y+2ℓe)
if t < h_{min}, ϕP_c = ϕ2.67sqrt(f'c)[(x+2ℓe)(y+2ℓe) - A_R]
ϕP_c = 138.17 K

Find tension capacity of studs

ϕP_y = $\phi f_y(A_{bar})$(#bars)
ϕP_y = 143.14 K

controlling tension capacity (ϕP) = 138.17 K

Find moment capacity of anchor

Moment capacity of anchor (ϕM_n) = ϕP(d-a/2)
d = attachment depth - bar cover - (y-Yd_{head})/2 = 30 in
a = $A_s f_y$/0.85f'$_c$b = 6.24 in
ϕM_n = 309.52 k-f

CONTECH BRIDGE SOLUTIONS INC.

#468920-010 US ROUTE 2

VII. CHECK TYPE 'D' ANCHOR ATTACHMENT

SHEAR CAPACITY (Per PCI Design Handbook §6.5.2.2)

Find shear capacity of concrete

$\phi V_c = \phi V'_c C_w C_t C_c$

$\phi V'_c = \phi 12.5 d_e^{1.5} \text{sqrt}(f'_c)$	= 187.4 K
$C_w = 1 + \text{spacing}/3.5d_e < \#\text{columns}$	= 1.0
$C_t = t/1.3d_e <= 1.0$	= 0.23
$C_c = 0.4 + 0.7d_c/de <= 1.0$	= 1.0
d_e = attachment depth - cover - bar dia/2	= 40 in
d_c = distance to side of wingwall	= 36 in

$\phi V_c = \phi V'_c C_w C_t C_c =$ 43.66 K

Find shear capacity of studs

$\phi V_y = \phi 0.9 f_y A_{bar}(\#\text{bars})$

ϕV_y = 128.82 K

controlling shear capacity (ϕV) = 43.66 K

FIND LOADS

Unfactored loads on anchors:

$M_{D(DL)}$ = (sec width)$M_{D(anchor)}$

$M_{D(LL)}$ = (sec width)($M_{D(anchor)}$ + P_{imp}*(wall ht + y_{imp}))

Factored loads:

Load factors are per AASHTO 3.4.1-1 & Table 3.4.1-2

$M_{u\ STR1} = 1.5M_{D(DL)} + 1.75M_{D(LL)}$

$M_{u\ EXTII} = 1.5M_{D(DL)} + 0.5M_{D(LL)} + 1.0M_{(BAR)}$

$P_u = M_u$ /(d-a/2)*cos(bar angle)

$V_u = M_u$ /(d-a/2)*sin(bar angle)

bar angle = 0

anchor	$M_{D(DL)}$ K-ft	$M_{D(LL)}$ K-ft	M_{bar} K-ft	$M_{u\ STR\ I}$ K-ft	$M_{u\ EXT\ II}$	P_u K	V_u K
1	93.5	0.0	0.0	140.3	140.3	62.6	0.0

anchor	Check $\phi M_n > M_u$	Check $\phi P > P_u$	Check $\phi V > V_u$	Check V_c & P_c	Check V_s & P_s	Check Splice	ALL CHECKS OK
1	*OK*	*OK*	*OK*	*OK*	*OK*	*OK*	*OK*

VII. CHECK TYPE 'E' ANCHOR ATTACHMENT

Check capacity of connector for pullout (truncated pyramid failure), shear, tension, and combined shear & tension

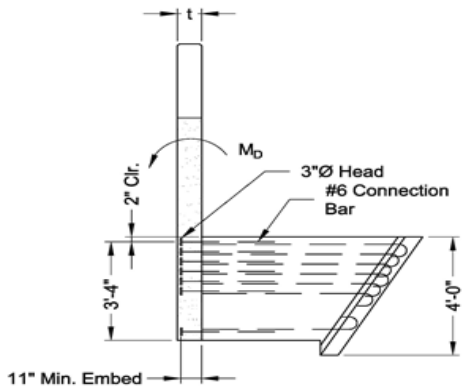

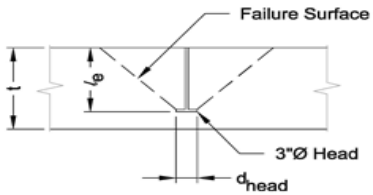

embedment depth (ℓ_e)= **11 in**

Attachment depth = 42 in
X head dimension (Xd_{head}) = 3 in
Y head dimension (Yd_{head}) = 3 in
Bar size = **# 6**
rows = **7**
row spacing = **3 in**
wall thickness (t) = 12 in
x = Xd_{head} (*since only 1 column*) = 3 in
y = (#rows-1)(row spacing) + Yd_{head} = 21 in
z = min(x,y) = 3 in
h_{min} = (z + 2ℓ_e)/2 = 12.5 in
A_R = (x+2ℓ_e-2t)(y+2ℓ_e-2t) = 19.0 in^2

f'_c = 5000 psi
f_y = 60000 psi
$\phi_{concrete}$ = 0.85
ϕ_{steel} = 0.90

TENSION CAPACITY (Per PCI Design Handbook §6.5.2.1)

t < hmin: failure surface penetrates slab

Find pullout capacity of concrete

if t >= h_{min}, ϕP_c = ϕ2.67sqrt(f'c)(x+2ℓe)(y+2ℓe)
if t < h_{min}, ϕP_c = ϕ2.67sqrt(f'c)[(x+2ℓe)(y+2ℓe) - A_R]
ϕP_c = 169.46 K

Find tension capacity of studs

ϕP_y = $\phi f_y(A_{bar})$(#bars)
ϕP_y = 167.00 K

controlling tension capacity (ϕP) = 167.00 K

Find moment capacity of anchor

Moment capacity of anchor (ϕM_n) = ϕP(d-a/2)
d = attachment depth - bar cover - (y-Yd_{head})/2 = 31 in
a = $A_s f_y$/0.85f'$_c$b = 7.28 in
ϕM_n = 380.77 k-f

CONTECH BRIDGE SOLUTIONS INC.

#468920-010 US ROUTE 2

VII. CHECK TYPE 'E' ANCHOR ATTACHMENT

SHEAR CAPACITY (Per PCI Design Handbook §6.5.2.2)

Find shear capacity of concrete

$\phi V_c = \phi V'_c C_w C_t C_c$

$\phi V'_c = \phi 12.5 d_e^{1.5} \text{sqrt}(f'_c)$	= 187.4 K
$C_w = 1 + \text{spacing}/3.5d_e < \#\text{columns}$	= 1.0
$C_t = t/1.3d_e <= 1.0$	= 0.23
$C_c = 0.4 + 0.7d_c/de <= 1.0$	= 1.0
d_e = attachment depth - cover - bar dia/2	= 40 in
d_c = distance to side of wingwall	= 36 in

$\phi V_c = \phi V'_c C_w C_t C_c =$ 43.66 K

Find shear capacity of studs

$\phi V_y = \phi 0.9 f_y A_{bar}(\#\text{bars})$

$\phi V_y =$ 150.30 K

controlling shear capacity (ϕV) = 43.66 K

FIND LOADS

Unfactored loads on anchors:

$M_{D(DL)}$ = (sec width)$M_{D(anchor)}$

$M_{D(LL)}$ = (sec width)($M_{D(anchor)}$ + P_{imp}*(wall ht + y_{imp}))

Factored loads:

Load factors are per AASHTO 3.4.1-1 & Table 3.4.1-2

$M_{u\ STR1} = 1.5M_{D(DL)} + 1.75M_{D(LL)}$

$M_{u\ EXTII} = 1.5M_{D(DL)} + 0.5M_{D(LL)} + 1.0M_{(BAR)}$

$P_u = M_u$ /(d-a/2)*cos(bar angle)

$V_u = M_u$ /(d-a/2)*sin(bar angle)

bar angle = 0

anchor	$M_{D(DL)}$ K-ft	$M_{D(LL)}$ K-ft	M_{bar} K-ft	$M_{u\ STR\ I}$ K-ft	$M_{u\ EXT\ II}$	P_u K	V_u K
2	130.0	0.0	0.0	195.0	195.0	85.5	0.0
3	172.7	0.0	0.0	259.0	259.0	113.6	0.0

anchor	check $\phi M_n > M_u$	check $\phi P > P_u$	check $\phi V > V_u$	check combined V_c & P_c	check combined V_s & P_s	Check Splice	ALL CHECKS OK
2	*OK*	*OK*	*OK*	*OK*	*OK*	*OK*	*OK*
3	*OK*	*OK*	*OK*	*OK*	*OK*	*OK*	*OK*

HITEC-METHOD LRFD WINGWALL CALCULATIONS

PROJECT NUMBER: 468920-010
PROJECT NAME: US ROUTE 2
DATE: Dec 9, 2015
BY: KDK

WINGWALL LABEL WW4

INPUT PARAMETERS:

Wall geometry

Panel Height (high) = **8.71 ft**
Panel Height (low) = **2.25 ft**
Soil Ht Below Wall= **0.00 ft**
Wall Panel Length = **22.00 ft**
Entire Wall length = **22.00 ft**
Length of flat = **1.00 ft**
Total wall thickness = **10 in**
Formliner relief = **0.0 in**
Structural Wall Thickness = 10.00 in
Wingwall Drop (high-low) = 6.46 ft
Wall slope = 0.3075
Max fill ht. (t/road to b/ww) = **24.00 ft**
Fill Slope (perp. to road) = **5.0**
Wall angle (perp. to road) = **0**
Fill slope (perp. to wall) = 0.00

Wingwall properties

Wingwall Panel Connected to arch unit = ☑
Surcharge on plate Y/N = ☐
Hooked Bars = ☐
epoxy coated = ☐
Precast Foundations = ☐

Connection Plates

plates= **2**
Check bolt: **OK**
Check plate: **OK**
Plate Stress = **9.1 psi**

YP2= **6.00 ft**
YP1= **9 in**

Soil properties

γ_{soil} = **120 pcf**
γ_{conc} = **150 pcf**
$\gamma_{LLsurcharge}$ = **125 pcf**
ϕ_{AB} = **32**
θ_{AB} = **0**
δ_{AB} = **24**
ϕ_{BC} = **32**
θ_{BC} = **30**
δ_{BC} = **16**

Concrete properties

f'_c = **5000 psi**
fy = **60000 psi**

Foundation

BY OTHERS

Impact loading

Barrier Type = **NONE**
Loading Type = **NO IMPACT**
Impact load = 0.00 K
Distance from Top of Pavement =
Distribution Width = 7.18 ft

Liveload Surcharge

Surcharge = ☐ 0.00 ft

Vertical wall reinforcement

Grouped Rebar
Grouped Rebar = **2 - # 5**
Check A_s: ***OK*** Check Vu: ***OK***

	Distance to Anchor	Overriding perp. Slope at Anchor	Wall height at Anchor	Contrib. Width	Perp. slope used at Anchor	h_{eq} LL Surch	Anchor Type	Check Bearing of Footing	Check 'e' of wall on top of footing	Check Sliding
Anchor #1	3.00 ft	2.0	3.17 ft	5.500 ft	2.00	0.00 ft	A		OK	
Anchor #2	8.00 ft	2.0	4.71 ft	5.000 ft	2.00	0.00 ft	B		OK	
Anchor #3	13.00 ft	2.0	6.25 ft	5.000 ft	2.00	0.00 ft	B		OK	
Anchor #4	18.00 ft	2.0	7.79 ft	4.50 ft	2.00	0.00 ft	B		OK	

1. Wingwall calculations are done in accordance with the current edition of the AASHTO LRFD Bridge Design Specifications.
2. Moments are summed about the toe (face) of the wingwall (point "o" on "Pressure Diagram").
3. Ka is calculated using equation found in former AASHTO Standard Specifications Figure 5.9.2A (same as current AASHTO Standa Specifications Figure 5.5.2A, with q defined using a different reference line.)

$$\frac{\cos^2(\phi+\theta)}{\cos^2\theta\cos(\theta-\delta)\left[1+\sqrt{\frac{\sin(\phi+\delta)\sin(\phi-\beta)}{\cos(\theta-\delta)\cos(\theta+\beta)}}\right]^2}$$

4. Only 80% of the soil unit weight is used for the eccentricity/ stability calculation. This is a conservative assumption as explained HITEC report "Evaluation of the CON/SPAN® Wingwall System"
5. The full 100% of the soil unit weight is used for the bearing calculations.
6. These calculations conservatively assume that the wall anchor has the same unit weight as soil.
7. The wingwall angle (in plan view) is measured from perpendicular to roadway.
8. Barrier loads are distributed per AASHTO LRFD Specifications Section 3.24.5.2.

PRESSURE DIAGRAM FOR WINGWALL ANCHOR STABILITY CALCULATIONS

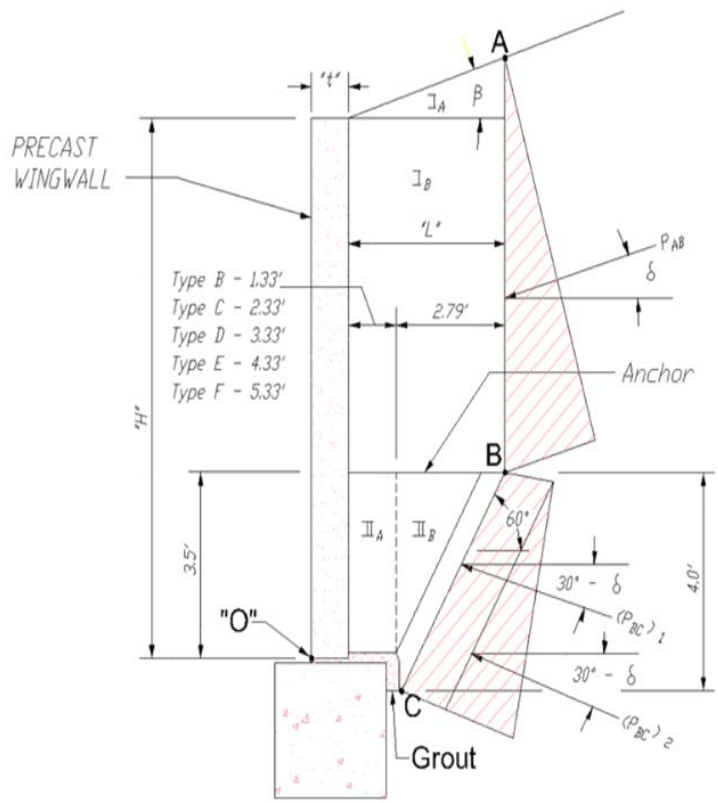

CONTECH BRIDGE SOLUTIONS INC.

#468920-010 US ROUTE 2

ANCHOR 1

VARIABLE	DESCRIPTION OF VARIABLE	VALUE (Section AB)	VALUE (Section BC)
ϕ	internal friction angle of soil	32	32
θ	angle of wall to the y-axis	0	30
δ	wall-soil friction angle *(measured from a perpendicular with the wall)*	24	16
	= 0, if significant vibrations of backfill or modules settling more than backfill		
	= 0.5*ϕ, if modules are uniform width.		
	= 0.75*ϕ, if averaged pressure surface		
x	side slopes from road (x:1)	2.0	
α	wingwall angle (angle w/ perpendicular to road)	0	
	slope of backfill (perpendicular to wall)	2.00	
β	angle of backfill (perpendicular to wall)	26.6	26.6

$(K_a)_{AB}$ = 0.46 $(K_a)_{BC}$ = 0.16

VARIABLE	DESCRIPTION OF VARIABLE	VALUE	
H	backfill design height at anchor location (feet)	3.17	
Hw	wingwall design height at anchor location (feet)	3.17	
h_{eq}	height of live load surcharge (feet)	0.00	*(see AASHTO Table 3.11.6.4-2)*
t	thickness of wingwall (inches)	10	
δ	wall friction angle for section AB	24	
β	angle of backfill (degrees)	26.6	
L	length of anchor (feet)	3.18	A
γ_s	unit weight of backfill (kcf)	0.120	
γ_c	unit weight of concrete (kcf)	0.150	
γ_{surch}	unit weight of surcharge (kcf)	0.125	

Element	Load Factor *(stability)*	Load Factor *(bearing)*	Unfact'd Vert Reaction (k/ft)	Unfact'd Horiz Reaction (k/ft)	Fact'd Vert Reaction (k/ft) *(stability)*	Fact'd Vert Reaction (k/ft) *(bearing)*	Fact'd Horiz Reaction (k/ft) *(stability)*	Fact'd Horiz Reaction (k/ft) *(bearing)*	Lever Arm (ft)	Sum of Unfact'd Moments (ft-k/ft)	Sum of Fact'd Moments (ft-k/ft) *(stability)*	Sum of Fact'd Moments (ft-k/ft) *(bearing)*
wall (W_w)	0.90	0.90	0.40		0.36	0.36			0.42	0.17	0.15	0.15
soil I_A	1.00	1.00	0.30		0.30	0.30			2.95	0.90	0.72	0.90
soil I_B	1.00	1.00	0.45		0.45	0.45			2.42	1.08	0.87	1.08
soil II_A	1.00	1.00	0.30		0.30	0.30			1.46	0.44	0.35	0.44
soil II_B	1.00	1.00	0.23		0.23	0.23			2.57	0.59	0.47	0.59
$W_{surcharge\ (vert)}$	1.75	1.75	0.00		0.00	0.00			2.42	0.00	0.00	0.00
Soil Pressure												
$(P_{AB})_v$	1.50	1.50	0.09		0.13	0.13			4.01	0.34	0.51	0.51
$(P_{AB})_h$	1.50	1.50		0.19			0.29	0.29	2.92	-0.56	-0.84	-0.84
$(P_{BC1})_v$	1.50	1.50	-0.04		-0.06	-0.06			3.29	-0.12	-0.19	-0.19
$(P_{BC1})_h$	1.50	1.50		0.15			0.23	0.23	0.75	-0.11	-0.17	-0.17
$(P_{BC2})_v$	1.50	1.50	-0.02		-0.03	-0.03			3.05	-0.05	-0.08	-0.08
$(P_{BC2})_h$	1.50	1.50		0.07			0.10	0.10	0.33	-0.02	-0.03	-0.03
$P_{surcharge\ (hor)}$	1.75	1.75		0.00			0.00	0.00	2.38	0.00	0.00	0.00
TOTALS =			1.71	0.41	1.69	1.69	0.62	0.62		2.65	1.77	2.37

ℓ = location of resultant = $\Sigma M / \Sigma R_v$ =

unfactored	1.55 ft
stability	1.05 ft
bearing	1.40 ft

CONTECH BRIDGE SOLUTIONS INC.

#468920-010 US ROUTE 2

ANCHOR 2

VARIABLE	DESCRIPTION OF VARIABLE	VALUE (Section AB)	VALUE (Section BC)
ϕ	internal friction angle of soil	32	32
θ	angle of wall to the y-axis	0	30
δ	wall-soil friction angle *(measured from a perpendicular with the wall)*	24	16
	= 0, if significant vibrations of backfill or modules settling more than backfill		
	= 0.5*ϕ, if modules are uniform width.		
	= 0.75*ϕ, if averaged pressure surface		
x	side slopes from road (x:1)	2.0	
α	wingwall angle (angle w/ perpendicular to road)	0	
	slope of backfill (perpendicular to wall)	2.00	
β	angle of backfill (perpendicular to wall)	26.6	26.6

$(K_a)_{AB}$ = 0.46 $(K_a)_{BC}$ = 0.16

VARIABLE	DESCRIPTION OF VARIABLE	VALUE	
H	backfill design height at anchor location (feet)	4.71	
Hw	wingwall design height at anchor location (feet)	4.71	
h_{eq}	height of live load surcharge (feet)	0.00	*(see AASHTO Table 3.11.6.4-2)*
t	thickness of wingwall (inches)	10	
δ	wall friction angle for section AB	24	
β	angle of backfill (degrees)	26.6	
L	length of anchor (feet)	4.04	B
γ_s	unit weight of backfill (kcf)	0.120	
γ_c	unit weight of concrete (kcf)	0.150	
γ_{surch}	unit weight of surcharge (kcf)	0.125	

Element	Load Factor *(stability)*	Load Factor *(bearing)*	Unfact'd Vert Reaction (k/ft)	Unfact'd Horiz Reaction (k/ft)	Fact'd Vert Reaction (k/ft) *(stability)*	Fact'd Vert Reaction (k/ft) *(bearing)*	Fact'd Horiz Reaction (k/ft) *(stability)*	Fact'd Horiz Reaction (k/ft) *(bearing)*	Lever Arm (ft)	Sum of Unfact'd Moments (ft-k/ft)	Sum of Fact'd Moments (ft-k/ft) *(stability)*	Sum of Fact'd Moments (ft-k/ft) *(bearing)*
wall (W_w)	0.90	0.90	0.59		0.53	0.53			0.42	0.25	0.22	0.22
soil I_A	1.00	1.00	0.49		0.49	0.49			3.53	1.73	1.38	1.73
soil I_B	1.00	1.00	0.59		0.59	0.59			2.85	1.67	1.34	1.67
soil II_A	1.00	1.00	0.53		0.53	0.53			1.46	0.77	0.61	0.77
soil II_B	1.00	1.00	0.59		0.59	0.59			2.85	1.67	1.34	1.67
$W_{surcharge\ (vert)}$	1.75	1.75	0.00		0.00	0.00			2.85	0.00	0.00	0.00
Soil Pressure												
$(P_{AB})_v$	1.50	1.50	0.12		0.18	0.18			4.87	0.57	0.85	0.85
$(P_{AB})_h$	1.50	1.50		0.26			0.39	0.39	4.58	-1.20	-1.80	-1.80
$(P_{BC1})_v$	1.50	1.50	-0.07		-0.11	-0.11			3.72	-0.26	-0.39	-0.39
$(P_{BC1})_h$	1.50	1.50		0.28			0.42	0.42	1.50	-0.42	-0.64	-0.64
$(P_{BC2})_v$	1.50	1.50	-0.04		-0.07	-0.07			3.33	-0.15	-0.22	-0.22
$(P_{BC2})_h$	1.50	1.50		0.18			0.26	0.26	0.83	-0.15	-0.22	-0.22
$P_{surcharge\ (hor)}$	1.75	1.75		0.00			0.00	0.00	3.37	0.00	0.00	0.00
TOTALS =			2.78	0.72	2.72	2.72	1.08	1.08		4.47	2.48	3.64

ℓ = location of resultant = $\Sigma M / \Sigma R_v$ =

unfactored	1.61 ft
stability	0.91 ft
bearing	1.34 ft

CONTECH BRIDGE SOLUTIONS INC.

#468920-010 US ROUTE 2

ANCHOR 3

VARIABLE	DESCRIPTION OF VARIABLE	VALUE (Section AB)	VALUE (Section BC)
ϕ	internal friction angle of soil	32	32
θ	angle of wall to the y-axis	0	30
δ	wall-soil friction angle *(measured from a perpendicular with the wall)*	24	16
	= 0, if significant vibrations of backfill or modules settling more than backfill		
	= 0.5*ϕ, if modules are uniform width.		
	= 0.75*ϕ, if averaged pressure surface		
x	side slopes from road (x:1)	2.0	
α	wingwall angle (angle w/ perpendicular to road)	0	
	slope of backfill (perpendicular to wall)	2.00	
β	angle of backfill (perpendicular to wall)	26.6	26.6
		$(K_a)_{AB}$ = 0.46	$(K_a)_{BC}$ = 0.16

VARIABLE	DESCRIPTION OF VARIABLE	VALUE	
H	backfill design height at anchor location (feet)	6.25	
Hw	wingwall design height at anchor location (feet)	6.25	
h_{eq}	height of live load surcharge (feet)	0.00	*(see AASHTO Table 3.11.6.4-2)*
t	thickness of wingwall (inches)	10	
δ	wall friction angle for section AB	24	
β	angle of backfill (degrees)	26.6	
L	length of anchor (feet)	4.04	B
γ_s	unit weight of backfill (kcf)	0.120	
γ_c	unit weight of concrete (kcf)	0.150	
γ_{surch}	unit weight of surcharge (kcf)	0.125	

Element	Load Factor *(stability)*	Load Factor *(bearing)*	Unfact'd Vert Reaction (k/ft)	Unfact'd Horiz Reaction (k/ft)	Fact'd Vert Reaction (k/ft) *(stability)*	Fact'd Vert Reaction (k/ft) *(bearing)*	Fact'd Horiz Reaction (k/ft) *(stability)*	Fact'd Horiz Reaction (k/ft) *(bearing)*	Lever Arm (ft)	Sum of Unfact'd Moments (ft-k/ft)	Sum of Fact'd Moments (ft-k/ft) *(stability)*	Sum of Fact'd Moments (ft-k/ft) *(bearing)*
wall (W_w)	0.90	1.25	0.78		0.70	0.98			0.42	0.33	0.29	0.41
soil I_A	1.00	1.35	0.49		0.49	0.66			3.53	1.73	1.38	2.33
soil I_B	1.00	1.35	1.33		1.33	1.80			2.85	3.80	3.04	5.13
soil II_A	1.00	1.35	0.53		0.53	0.71			1.46	0.77	0.61	1.03
soil II_B	1.00	1.35	0.59		0.59	0.79			2.85	1.67	1.34	2.26
$W_{surcharge\ (vert)}$	1.75	1.75	0.00		0.00	0.00			2.85	0.00	0.00	0.00
Soil Pressure												
$(P_{AB})_v$	1.50	1.50	0.25		0.38	0.38			4.87	1.24	1.86	1.86
$(P_{AB})_h$	1.50	1.50		0.57			0.86	0.86	5.09	-2.91	-4.36	-4.36
$(P_{BC1})_v$	1.50	1.50	-0.10		-0.16	-0.16			3.72	-0.39	-0.58	-0.58
$(P_{BC1})_h$	1.50	1.50		0.42			0.63	0.63	1.50	-0.63	-0.94	-0.94
$(P_{BC2})_v$	1.50	1.50	-0.04		-0.07	-0.07			3.33	-0.15	-0.22	-0.22
$(P_{BC2})_h$	1.50	1.50		0.18			0.26	0.26	0.83	-0.15	-0.22	-0.22
$P_{surcharge\ (hor)}$	1.75	1.75		0.00			0.00	0.00	4.13	0.00	0.00	0.00
TOTALS =			3.82	1.17	3.80	5.10	1.75	1.75		5.32	2.20	6.70

ℓ = location of resultant = $\Sigma M / \Sigma R_v$ =

unfactored	1.39 ft
stability	0.58 ft
bearing	1.31 ft

CONTECH BRIDGE SOLUTIONS INC.

#468920-010 US ROUTE 2

ANCHOR 4

VARIABLE	DESCRIPTION OF VARIABLE	VALUE (Section AB)	VALUE (Section BC)
ϕ	internal friction angle of soil	32	32
θ	angle of wall to the y-axis	0	30
δ	wall-soil friction angle *(measured from a perpendicular with the wall)*	24	16
	= 0, if significant vibrations of backfill or modules settling more than backfill		
	= 0.5*ϕ, if modules are uniform width.		
	= 0.75*ϕ, if averaged pressure surface		
x	side slopes from road (x:1)	2.0	
α	wingwall angle (angle w/ perpendicular to road)	0	
	slope of backfill (perpendicular to wall)	2.00	
β	angle of backfill (perpendicular to wall)	26.6	26.6

$(K_a)_{AB}$ = 0.46 $(K_a)_{BC}$ = 0.16

VARIABLE	DESCRIPTION OF VARIABLE	VALUE	
H	backfill design height at anchor location (feet)	7.79	
Hw	wingwall design height at anchor location (feet)	7.79	
h_{eq}	height of live load surcharge (feet)	0.00	*(see AASHTO Table 3.11.6.4-2)*
t	thickness of wingwall (inches)	10	
δ	wall friction angle for section AB	24	
β	angle of backfill (degrees)	26.6	
L	length of anchor (feet)	4.04	B
γ_s	unit weight of backfill (kcf)	0.120	
γ_c	unit weight of concrete (kcf)	0.150	
γ_{surch}	unit weight of surcharge (kcf)	0.125	

Element	Load Factor *(stability)*	Load Factor *(bearing)*	Unfact'd Vert Reaction (k/ft)	Unfact'd Horiz Reaction (k/ft)	Fact'd Vert Reaction (k/ft) *(stability)*	Fact'd Vert Reaction (k/ft) *(bearing)*	Fact'd Horiz Reaction (k/ft) *(stability)*	Fact'd Horiz Reaction (k/ft) *(bearing)*	Lever Arm (ft)	Sum of Unfact'd Moments (ft-k/ft)	Sum of Fact'd Moments (ft-k/ft) *(stability)*	Sum of Fact'd Moments (ft-k/ft) *(bearing)*
wall (W_w)	0.90	0.90	0.97		0.88	0.88			0.42	0.41	0.36	0.36
soil I_A	1.00	1.00	0.49		0.49	0.49			3.53	1.73	1.38	1.73
soil I_B	1.00	1.00	2.08		2.08	2.08			2.85	5.93	4.74	5.93
soil II_A	1.00	1.00	0.53		0.53	0.53			1.46	0.77	0.61	0.77
soil II_B	1.00	1.00	0.59		0.59	0.59			2.85	1.67	1.34	1.67
$W_{surcharge\ (vert)}$	1.75	1.75	0.00		0.00	0.00			2.85	0.00	0.00	0.00
Soil Pressure												
$(P_{AB})_v$	1.50	0.90	0.45		0.67	0.40			4.87	2.17	3.25	1.95
$(P_{AB})_h$	1.50	0.90		1.00			1.50	0.90	5.60	-5.60	-8.40	-5.04
$(P_{BC1})_v$	1.50	0.90	-0.14		-0.21	-0.12			3.72	-0.51	-0.77	-0.46
$(P_{BC1})_h$	1.50	0.90		0.55			0.83	0.50	1.50	-0.83	-1.24	-0.75
$(P_{BC2})_v$	1.50	0.90	-0.04		-0.07	-0.04			3.33	-0.15	-0.22	-0.13
$(P_{BC2})_h$	1.50	0.90		0.18			0.26	0.16	0.83	-0.15	-0.22	-0.13
$P_{surcharge\ (hor)}$	1.75	1.75		0.00			0.00	0.00	4.90	0.00	0.00	0.00
TOTALS =			4.92	1.73	4.95	4.79	2.59	1.56		5.43	0.84	5.90

ℓ = location of resultant = $\Sigma M / \Sigma R_v$ =

unfactored	1.11 ft
stability	0.17 ft
bearing	1.23 ft

#468920-010 US ROUTE 2

STABILITY

II. CHECK STABILITY (ECCENTRICITY & SLIDING) OF WALL

Check the eccentricity of the vertical resultant of the wall above the CIP footing:

R_v = Total factored vertical reaction for anchor's wall section (using 80% of soil weight). (Refer to anchor's calculation sheet *"Factored Vertical Reaction (e & sliding)".*)

R_h = Total factored horizontal reaction for anchor's wall section. (Refer to anchor's calculation sheet *"Factored Horizonatal Reaction"* .)

ℓ = location of resultant of factored vertical forces at base of anchor (for each anchor section). (Refer to anchor's calculation sheet *"ℓ - e & sliding"* .)

e = eccentricity of resultant of factored vertical forces compared to base length

e_{max} = 0..45*base length (ℓ must be within the middle 9/10 of the base, since the precast wall sits on a CIP foundation, which is equivalent to rock. *AASHTO 11.6.3.3)*

Check eccentricity of vertical resultant at base of anchor (for each anchor section)

anchor section	base length	R_v (K/F)	R_h (K/F)	ℓ (ft)	e (ft)	check e < emax	e inside mid. 9/10?
1	2.56	1.69	0.62	1.05	0.23	***OK***	*yes*
2	2.56	2.72	1.08	0.91	0.37	***OK***	*yes*
3	2.56	3.80	1.75	0.58	0.70	***OK***	*yes*
4	2.56	4.95	2.59	0.17	1.11	***OK***	*no*

V. CHECK STABILITY AT CONNECTION PLATES

The connection plates provide stability for the portion of the wall not supported by the anchors, i.e., the section closest to the culvert.

Data:

number of plates = 2

ϕ = 32

δ = 24

γ_s = 0.120 kcf

$\gamma_{(surcharge)}$ = 0.125 kcf

soil height @ plates (H) = **8.71 ft**

Live load surcharge (h) = **0.00 ft**

section width for plates (S) = 2.0 ft

y_{Psh} = H/3 = 2.9 ft

y_{PLL} = H/2 = 4.4 ft

y_{p1} = **0.75 ft**

y_{p2} = **6.75 ft**

A_{bolt} = **0.79**

t_{plate} = **1.00 in**

(A307 -AASHTO 6.5.4.2) $\phi_{t(bolt)}$ = **0.80**

(A307 -AASHTO 6.4.3.1) $F_{u(bolt)}$ = **60 ksi**

(AASHTO 6.5.4.2) ϕ_f = **1.00**

(A36 -AASHTO Table 6.4.1-1) $F_{y(plate)}$ = **36 ksi**

Find loads (soil pressure) on section:

Because the wall is more rigid at the plates, at-rest soil pressure coefficient (K_o) is used.

$K_o = 1\text{-}\sin\phi = 0.47$ *(AASHTO eqn 3.11.5.2-1)*

$P_{sh} = (^1/_2)\gamma_s K_o H^2(S)(\cos\delta) = 3.91$ K

$P_{LLh} = K_o\gamma_s HhS(\cos\delta) = 0.00$ K

P_{bar} = S*Rail Load/L_d = 0.00 K

Find reaction at plate:

Sum moments about bottom plate, p_1

$\Sigma M_{p1DL} = 0 = P_{sh}(y_{Psh} - y_{p1}) - p_2(y_{p2} - y_{p1})$ *(dead load)*

$\Sigma M_{p1LL} = 0 = P_{LL}(y_{PLL} - y_{p1}) - p_{2LL}(y_{p2} - y_{p1})$ *(live load)*

$\Sigma M_{p1bar} = 0 = P_{bar}(y_{Pimp} - y_{p1}) - p_{2bar}(y_{p2} - y_{p1})$ *(barrier load)*

$p_{2DL} = \dfrac{P_{sh}(y_{Psh} - y_{p1})}{(y_{p2} - y_{p1})} = 1.40$ K $\qquad p_{1DL} = P_{sh} - p_{2DL} = 2.51$ K

$p_{2LL} = \dfrac{P_{LLh}(y_{pLL} - y_{p1})}{(y_{p2} - y_{p1})} = 0.00$ K $\qquad p_{1LL} = P_{LL} - p_{2LL} = 0.00$ K

$p_{2bar} = \dfrac{P_{bar}(y_{imp} - y_{p1})}{(y_{p2} - y_{p1})} = 0.00$ K $\qquad p_{1bar} = P_{bar} - p_{2bar} = 0.00$ K

$p_{2(tot)} = 1.40$ K $\qquad p_{1(tot)} = 2.51$ K Controls

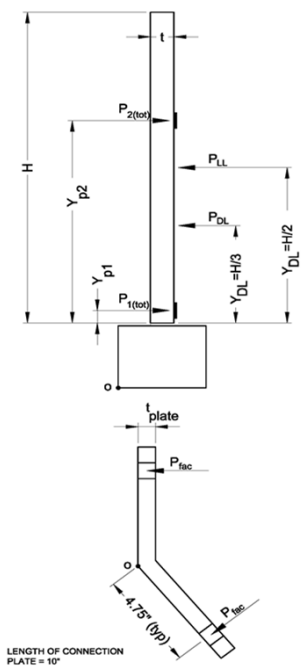

Find factored reaction:

Load factors are per AASHTO Table 3.4.1-1and AASHTO Table 3.4.1-2

$p_{u\ STR\ I} = (1.35)p_{max(DL)} + (1.75)p_{max(LL)}$

$p_{u\ EXT\ II} = (1.35)p_{max(DL)} + (0.50)p_{max(LL)} + (1.0)p_{bar}$

$p_{u\ max} = 3.38$ K

Check bolts :

The special Richmond 2-bolt wingwall insert pullout capacity was obtained from the manufacturer and has approx. 3:1 safety factor. ϕTn is defined in AASHTO 6.13.2.10.2.

Pullout capacity = 16.5 k/bolt

check p_u < pullout capacity*2 bolts = *OK*

Bolt tension capacity, $\phi_t T_n = \phi 0.76 * F_{ubolt} A_{bolt}$ = 28.8 k/bolt

check $p_u < \phi_t T_n$*2 bolts = *OK*

Check bending of plate:

Find maximum bending stress in plate.

$M_u = (p_u)(4.5")$ = 15.2 k-in

$I_{pl} = bt_{plate}^3/12$ = 0.83 in^4

$F_{ult} = M_u y / I_{pl}$ = 9 ksi

check $F_{ult} < \phi_f F_y$ = *OK*

V. CHECK WALL SECTION - BENDING AND SHEAR (vertical bars)

Assumptions: *1. Wall stem is cantilevered from anchor*
2. Use active earth pressure because wall can deflect at top.
3. Critical Wall section will be at maximum horizontal load

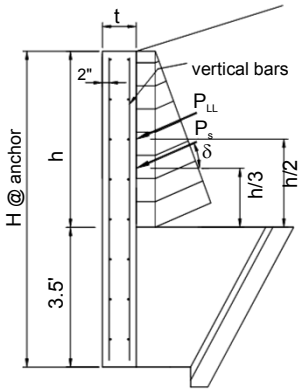

Horizontal loads:

$P_{sh} = (^1/_2)\gamma_s K_a h^2(\cos\delta)$

$P_{LLh} = \gamma_s K_a h(h_{surcharge})(\cos\delta)$

$P_{impact} = P_{imp}/L_{distr}$

Factored forces:

Load factors are per AASHTO Table 3.4.1-1and AASHTO Table 3.4.1-2

$M_{u\ Strength\ I}$ = Section width*[(1.5)P_{sh}*(h/3) + (1.75)P_{LLh}*(h/2)

$M_{u\ Ext\ II}$ = Section Width*[1.50P_{sh}*(h/3) + 0.50P_{LLh}*(h/2) + 1.00P_{imp}*(h+h_{rail})]

$V_{u\ Strength\ I}$ = Section Width* (1.50)P_{sh} + (1.75)P_{LLh}

$V_{u\ Ext\ II}$ = Section Width*[1.50P_{sh} + 0.50P_{LLh} + 1.00P_{imp}]

Summary of forces at anchors

anchor	H (ft)	h (ft)	$h_{surcharge}$ (ft)	P_{sh} (k/ft)	P_{LLh} (k/ft)	P_{imp} (k/ft)	$M_{u\ Strength\ 1}$ (k-ft)	$M_{u\ Ext.\ II}$ (k-ft)	$V_{u\ strength\ I}$ (k)	$V_{u\ ext\ I}$ (k)
1	3.17	1.17	0.00	0.03	0.00	0.00	0.11	0.11	0.29	0.29
2	4.71	1.21	0.00	0.04	0.00	0.00	0.11	0.11	0.28	0.28
3	6.25	2.75	0.00	0.19	0.00	0.00	1.30	1.30	1.42	1.42
4	7.79	4.29	0.00	0.46	0.00	0.00	4.45	4.45	3.12	3.12

Check bending (reinforcment) at anchors

f'_c = **5000 psi**

f_y = **60000 psi**

ϕ_b = **0.9** *(AASHTO 5.5.4.2.1)*

m = $f_y/0.85f'_c$ = 14.12

b = anchor's contrib. width

β = 0.8

$$R_u = \frac{M_u}{\phi_b b d^2}$$

$$\rho_{reqd} = \frac{1}{m}\left(1-\sqrt{1-\frac{2mR_u}{f_y}}\right)$$

ρ_{cr} *(steel ratio required to achieve 1.2Mcr, per AASHTO 5.7.3.3.2)*

$1.33\rho_{min}$ *(steel ratio required to achieve 1.33 times the factored moment strength per*

$\rho_{req'd}$ *(actual steel ratio is the minimum of the requirements of AASHTO 5.7.3.3.2, or rstrength)*

anchor	R_u (psi)	$\rho_{strength}$	ρ_{cr}	$1.33\rho_{strength}$	$\rho_{required}$	$A_{s\ min}$ (in2)	Bar Size	number of bars	$A_{s\ actual}$ (in2)	check
	0	0.0000	0.0029	0.0000	0.0000	0.00	#5 bars	2	1.33	*OK*
	0	0.0000	0.0029	0.0000	0.0000	0.00	#4 bars	2	1.04	*OK*
	5	0.0001	0.0028	0.0001	0.0001	0.05	#4 bars	2	1.04	*OK*
	18	0.0003	0.0028	0.0004	0.0004	0.17	#4 bars	2	0.98	*OK*

V. CHECK WALL SECTION - BENDING AND SHEAR (vertical bars)

Check shear

According to AASHTO 5.8.2.4, shear reinforcement is not required if $V_u < (0.5)\,\phi V_c$

$$\phi V_c = \phi_v\, 0.0316\ \beta \sqrt{f'_c}\, bd$$ *(AASHTO eq'n 5.8.3.3-3)*

anchor	ϕV_c	check Vu <0.5 ϕVc
1	63.34	***OK***
2	57.73	***OK***
3	57.73	***OK***
4	51.92	***OK***

anchor	a	β	c	ϕMn	check Mu < ϕMn
1	0.28	0.80	0.36	45.11	***OK***
2	0.25	0.80	0.31	35.50	***OK***
3	0.25	0.80	0.31	35.50	***OK***
4	0.26	0.80	0.32	33.26	***OK***

VII. CHECK TYPE 'A' ANCHOR ATTACHMENT

Check capacity of connector for pullout (truncated pyramid failure), shear, tension, and combined shear & tension

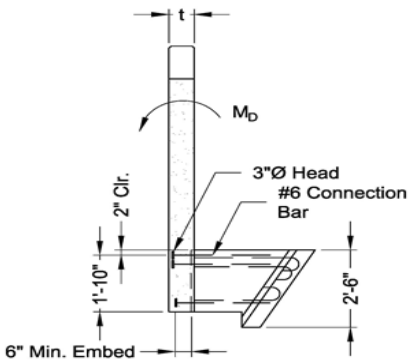

embedment depth (ℓ_e)= **6 in**

Attachment depth = 24 in
X head dimension (Xd_{head}) = 3 in
Y head dimension (Yd_{head}) = 3 in
Bar size = **# 6**
rows = **2**
row spacing = **4 in**
wall thickness (t) = 10 in
x = Xd_{head} (*since only 1 column*) = 3 in
y = (#rows-1)(row spacing) + Yd_{head} = 7 in
z = min(x,y) = 3 in
h_{min} = (z + 2ℓ_e)/2 = 7.5 in
A_R = (x+2ℓ_e-2t)(y+2ℓ_e-2t) = 5.0 in^2

f'_c = 5000 psi
f_y = 60000 psi
$\phi_{concrete}$ = 0.85
ϕ_{steel} = 0.90

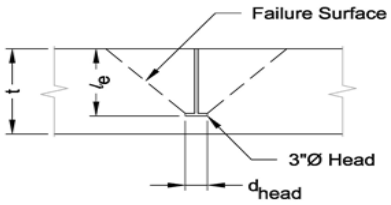

TENSION CAPACITY (Per PCI Design Handbook §6.5.2.1)

t > hmin: failure surface does not penetrate slab

Find pullout capacity of concrete

if t >= h_{min}, $\phi P_c = \phi 2.67 sqrt(f'c)(x+2\ell e)(y+2\ell e)$

if t < h_{min}, $\phi P_c = \phi 2.67 sqrt(f'c)[(x+2\ell e)(y+2\ell e) - A_R]$

ϕP_c = 45.74 K

Find tension capacity of studs

$\phi P_y = \phi f_y(A_{bar})(\#bars)$

ϕP_y = 47.71 K

controlling tension capacity (ϕP) = 45.74 K

Find moment capacity of anchor

Moment capacity of anchor (ϕM_n) = $\phi P(d-a/2)$

d = attachment depth - bar cover - ($y-d_{head}$)/2 = 20 in

a = $A_s f_y/0.85 f'_c b$ = 2.08 in

ϕM_n = 72.27 k-f

CONTECH BRIDGE SOLUTIONS INC.

#468920-010 US ROUTE 2

VII. CHECK TYPE 'A' ANCHOR ATTACHMENT

SHEAR CAPACITY (Per PCI Design Handbook §6.5.2.2)

Find shear capacity of concrete

$\phi V_c = \phi V'_c C_w C_t C_c$

$\phi V'_c = \phi 12.5 d_e^{1.5} \text{sqrt}(f'_c)$	= 75.6 K
$C_w = 1 + \text{spacing}/3.5d_e < \#\text{columns}$	= 1.0
$C_t = t/1.3d_e <= 1.0$	= 0.36
$C_c = 0.4 + 0.7d_c/de <= 1.0$	= 1.0
d_e = attachment depth - cover - bar dia/2	= 22 in
d_c = distance to side of wingwall (minimum)	= 36 in

$\phi V_c = \phi V'_c C_w C_t C_c =$ 26.88 K

Find shear capacity of studs

$\phi V_y = \phi 0.9 f_y A_{bar}(\#\text{bars})$

$\phi V_y =$ 42.94 K

controlling shear capacity (ϕV) = ***26.88 K***

FIND LOADS

Unfactored loads on anchors:

$M_{D(DL)}$ = (sec width)$M_{D(anchor)}$

$M_{D(LL)}$ = (sec width)($M_{D(anchor)}$ + P_{imp}*(wall ht + y_{imp}))

Factored loads:

Load factors are per AASHTO 3.4.1-1 & Table 3.4.1-2

$M_{u\ STR1} = 1.5)M_{D(DL)} + 1.75M_{D(LL)}$

$M_{u\ EXTII} = 1.5M_{D(DL)} + 0.5M_{D(LL)} + 1.0M_{(BAR)}$

$P_u = M_u$ /(d-a/2)*cos(bar angle)

$V_u = M_u$ /(d-a/2)*sin(bar angle)

bar angle = 0

anchor	$M_{D(DL)}$ K-ft	$M_{D(LL)}$ K-ft	M_{bar} K-ft	$M_{u\ STR\ I}$ K-ft	$M_{u\ EXT\ II}$	P_u K	V_u K
1	3.8	0.0	0.0	5.7	5.7	3.6	0.0
5	0.0	0.0	0.0	0.0	0.0	0.0	0.0

anchor	check $\phi M_n > M_u$	check $\phi P > P_u$	check $\phi V > V_u$	check combined V_c & P_c	check combined V_s & P_s	Check Splice	ALL CHECKS OK
1	*OK*	*OK*	*OK*	*OK*	*OK*	*OK*	*OK*
5	*n/a*	*n/a*	*n/a*	*n/a*	*n/a*	*n/a*	*n/a*

VII. CHECK TYPE 'B' ANCHOR ATTACHMENT

Check capacity of connector for pullout (truncated pyramid failure), shear, tension, and combined shear & tension

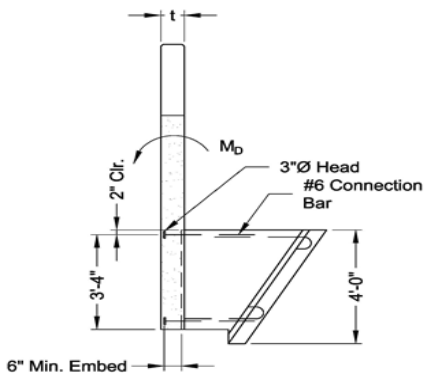

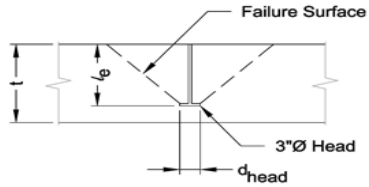

embedment depth (ℓ_e)= **6 in**

Attachment depth = 42 in
X head dimension (Xd_{head}) = 3 in
Y head dimension (Yd_{head}) = 3 in
Bar size = # **6**
rows = **1**
row spacing = **4 in**
wall thickness (t) = 10 in
x = Xd_{head} (*since only 1 column*) = 3 in
y = (#rows-1)(row spacing) + Yd_{head} = 3 in
z = min(x,y) = 3 in
h_{min} = (z + 2ℓ_e)/2 = 7.5 in
A_R = (x+2ℓ_e-2t)(y+2ℓ_e-2t) = 25.0 in^2

f'_c = 5000 psi
f_y = 60000 psi
$\phi_{concrete}$ = 0.85
ϕ_{steel} = 0.90

TENSION CAPACITY (Per PCI Design Handbook §6.5.2.1)

t > hmin: failure surface does not penetrate slab

Find pullout capacity of concrete

if t >= h_{min}, $\phi P_c = \phi 2.67 sqrt(f'c)(x+2\ell e)(y+2\ell e)$

if t < h_{min}, $\phi P_c = \phi 2.67 sqrt(f'c)[(x+2\ell e)(y+2\ell e) - A_R]$

ϕP_c = 36.11 K

Find tension capacity of studs

$\phi P_y = \phi f_y(A_{bar})(\#bars)$

ϕP_y = 23.86 K

controlling tension capacity (ϕP) = 23.86 K

Find moment capacity of anchor

Moment capacity of anchor (ϕM_n) = $\phi P(d-a/2)$

d = attachment depth - bar cover - $(y-d_{head})/2$ = 40 in

a = $A_s f_y/0.85 f'_c b$ = 1.04 in

ϕM_n = 78.49 k-f

CONTECH BRIDGE SOLUTIONS INC.

#468920-010 US ROUTE 2

VII. CHECK TYPE 'B' ANCHOR ATTACHMENT

SHEAR CAPACITY (Per PCI Design Handbook §6.5.2.2)

Find shear capacity of concrete

$\phi V'_c = \phi 12.5 d_e^{1.5} \text{sqrt}(f'_c)$	= 187.4 K
$C_w = 1 + \text{spacing}/3.5d_e < \#\text{columns}$	= 1.0
$C_t = t/1.3d_e <= 1.0$	= 0.19
$C_c = 0.4 + 0.7d_c/de <= 1.0$	= 1.0
d_e = attachment depth - cover - bar dia/2	= 40 in
d_c = distance to side of wingwall	= 36 in

$\phi V_c = \phi V'_c C_w C_t C_c =$ 36.38 K

Find shear capacity of studs

$\phi V_y = \phi 0.9 f_y A_{bar}(\#\text{bars})$

$\phi V_y = 21.47$ K

controlling shear capacity (ϕV) = 21.47 K

FIND LOADS

Unfactored loads on anchors:

$M_{D(DL)}$ = (sec width)$M_{D(anchor)}$

$M_{D(LL)}$ = (sec width)($M_{D(anchor)}$ + P_{imp}*(wall ht + y_{imp}))

Factored loads:

Load factors are per AASHTO 3.4.1-1 & Table 3.4.1-2

$M_{u\ STR1} = 1.5M_{D(DL)} + 1.75M_{D(LL)}$

$M_{u\ EXTII} = 1.5M_{D(DL)} + 0.5M_{D(LL)} + 1.0M_{(BAR)}$

$P_u = M_u$ /(d-a/2)*cos(bar angle)

$V_u = M_u$ /(d-a/2)*sin(bar angle)

bar angle = 0

anchor	$M_{D(DL)}$ K-ft	$M_{D(LL)}$ K-ft	M_{bar} K-ft	$M_{u\ STR\ I}$ K-ft	$M_{u\ EXT\ II}$	P_u K	V_u K
2	8.9	0.0	0.0	13.3	13.3	4.0	0.0
3	18.4	0.0	0.0	27.6	27.6	8.4	0.0
4	29.6	0.0	0.0	44.4	44.4	13.5	0.0

anchor	check $\phi M_n > M_u$	check $\phi P > P_u$	check $\phi V > V_u$	check combined V_c & P_c	check combined V_s & P_s	Check Splice	ALL CHECKS OK
2	OK	OK	OK	OK	OK	OK	OK
3	OK	OK	OK	OK	OK	OK	OK
4	OK	OK	OK	OK	OK	OK	OK