MATERIAL BAR LIST

Barker Steel LLC
PO Box 553
450 US Route 4
Canaan, NH 03741
USA

Job No.:	33505883	Release No.:	0001
Job Name:	Lunenburg NH CULV (27)	Release Description:	ARCH WALLS 1 & 2 PH. I
Sell-To Customer:	J. A. Mcdonald		VERIFY LENGHTS

Ship To:	Lunenburg NH CULV (27)	Prepared By:	ADM	Bill of Lading No.:		Expected Ship Date:	01/01/29
	US Route 2, Approx 0.9 Miles W of	Drawing Set No.:	LIST	Load No.:		Bar Weight (Lb)	3,450
	Lunenburg/Guildhall Town Line	Drawing Sheet No.:	LIST	Shipping Location:	Canaan	Bar Weight (Ton)	1.725
	Lunenburg, VT 05096	Mill Cert. Required:	Yes	Tag Color/Code:		Total No. of Bars:	270
		Bending On Site:	No			Longest Bar:	38'-10
Shipping Agent:		Cert. of Comp.:					

Bid Item No.: 507.11 Grade Group: 60B (A615-60 Black)

Quantity	Bar Size	Bend Type	Vary Group	Bar Mark	Length	A	B	C	D	E	F	G	H	J	K	O	R	Weight (Lb)
105	5	17		1A503	5'-2		1'-9	1'-8	1'-9									566.00
105	5	17		2A503	5'-2		1'-9	1'-8	1'-9									566.00
10	5	0		1A502A	38'-10		38'-10											405.00
10	5	0		2A502A	38'-10		38'-10											405.00
20	5	0		1A502	36'-2		36'-2											754.00
20	5	0		2A502	36'-2		36'-2											754.00

Bar Size Summary

Bar Size	Quantity	Weight (Lb)
5	270	3,450.00

MATERIAL BAR LIST

Barker Steel LLC
PO Box 553
450 US Route 4
Canaan, NH 03741
USA

Job No.:	33505883	Release No.:	0002
Job Name:	Lunenburg NH CULV (27)	Release Description:	MAT FOUNDATION PH. I
Sell-To Customer:	J. A. Mcdonald		VERIFY LENGTHS

Ship To:	Lunenburg NH CULV (27)	Prepared By:	ADM	Bill of Lading No.:		Expected Ship Date:	01/01/29
	US Route 2, Approx 0.9 Miles W of	Drawing Set No.:	LIST	Load No.:		Bar Weight (Lb)	31,649
	Lunenburg/Guildhall Town Line	Drawing Sheet No.:	LIST	Shipping Location:	Canaan	Bar Weight (Ton)	15.825
	Lunenburg, VT 05096	Mill Cert. Required:	Yes	Tag Color/Code:		Total No. of Bars:	1,270
		Bending On Site:	No			Longest Bar:	36'-2
Shipping Agent:		Cert. of Comp.:					

Bid Item No.: 507.11 Grade Group: 60B (A615-60 Black)

Quantity	Bar Size	Bend Type	Vary Group	Bar Mark	Length	A	B	C	D	E	F	G	H	J	K	O	R	Weight (Lb)
36	8	0		S803	29'-6		29'-6											2,836.00
62	8	0		S811	29'-1		29'-1											4,814.00
31	7	0		S710A	30'-3		30'-3											1,917.00
31	7	0		S710	27'-3		27'-3											1,727.00
140	6	0		S604	29'-6		29'-6											6,203.00
220	5	S5		S514	10'-10	1'-0	4'-1	0'-8	4'-1			1'-0						2,486.00
420	5	17A		S512	7'-1		6'-1	1'-0										3,103.00
93	5	0		S508	36'-2		36'-2											3,508.00
105	5	0		S502	29'-6		29'-6											3,231.00
132	5	0		S515	13'-3		13'-3											1,824.00

Bar Size Summary

Bar Size	Quantity	Weight (Lb)
8	98	7,650.00
7	62	3,644.00
6	140	6,203.00
5	970	14,152.00

MATERIAL BAR LIST

Barker Steel LLC
PO Box 553
450 US Route 4
Canaan, NH 03741
USA

Job No.:	33505883	Release No.:	0003
Job Name:	Lunenburg NH CULV (27)	Release Description:	ARCH WALLS 1 & 2 PH. II VER/ LGHTS
Sell-To Customer:	J. A. Mcdonald		

Ship To:	Lunenburg NH CULV (27) US Route 2, Approx 0.9 Miles W of Lunenburg/Guildhall Town Line Lunenburg, VT 05096	Prepared By:	ADM	Bill of Lading No.:		Expected Ship Date:	01/01/29
		Drawing Set No.:	LIST	Load No.:		Bar Weight (Lb)	910
		Drawing Sheet No.:	LIST	Shipping Location:	Canaan	Bar Weight (Ton)	0.455
		Mill Cert. Required:	Yes	Tag Color/Code:		Total No. of Bars:	78
		Bending On Site:	No			Longest Bar:	28'-8
Shipping Agent:		Cert. of Comp.:					

Bid Item No.: 507.11 Grade Group: 60B (A615-60 Black)

Quantity	Bar Size	Bend Type	Vary Group	Bar Mark	Length	A	B	C	D	E	F	G	H	J	K	O	R	Weight (Lb)
29	5	17		1A503	5'-2		1'-9	1'-8	1'-9									156.00
29	5	17		2A503	5'-2		1'-9	1'-8	1'-9									156.00
10	5	0		1A501	28'-8		28'-8											299.00
10	5	0		2A501	28'-8		28'-8											299.00

Bar Size Summary

Bar Size	Quantity	Weight (Lb)
5	78	910.00

MATERIAL BAR LIST

Barker Steel LLC
PO Box 553
450 US Route 4
Canaan, NH 03741
USA

Job No.:	33505883	Release No.:	0005
Job Name:	Lunenburg NH CULV (27)	Release Description:	MAT FOUNDATION PH. II
Sell-To Customer:	J. A. Mcdonald		VER. LGHTS

Ship To:	Lunenburg NH CULV (27) US Route 2, Approx 0.9 Miles W of Lunenburg/Guildhall Town Line Lunenburg, VT 05096	Prepared By:	ADM	Bill of Lading No.:	
		Drawing Set No.:	LIST	Load No.:	
		Drawing Sheet No.:	LIST	Shipping Location:	Canaan
		Mill Cert. Required:	Yes	Tag Color/Code:	
		Bending On Site:	No		
Shipping Agent:		Cert. of Comp.:			

Expected Ship Date:	01/01/29
Bar Weight (Lb)	9,343
Bar Weight (Ton)	4.672
Total No. of Bars:	482
Longest Bar:	29'-6

Bid Item No.: 507.11 Grade Group: 60B (A615-60 Black)

Quantity	Bar Size	Bend Type	Vary Group	Bar Mark	Length	A	B	C	D	E	F	G	H	J	K	O	R	Weight (Lb)
29	8	0		S803	29'-6		29'-6											2,284.00
31	7	0		S709	27'-9		27'-9											1,758.00
74	6	0		S601	7'-6		7'-6											834.00
20	5	S5		S514	10'-10	1'-0	4'-1	0'-8	4'-1			1'-0						226.00
178	5	17A		S512	7'-1		6'-1	1'-0										1,315.00
4	5	3C		S513	4'-10	0	2'-5	2'-5					1'-8 ½	0	1'-8 ½	0		20.00
29	5	0		S502	29'-6		29'-6											892.00
31	5	0		S507	27'-9		27'-9											897.00
18	5	0		S506	21'-5		21'-5											402.00
18	5	0		S505	13'-5		13'-5											252.00
12	5	0		S515	13'-3		13'-3											166.00
38	5	0		S516	7'-6		7'-6											297.00

Bar Size Summary

Bar Size	Quantity	Weight (Lb)
8	29	2,284.00
7	31	1,758.00
6	74	834.00
5	348	4,467.00

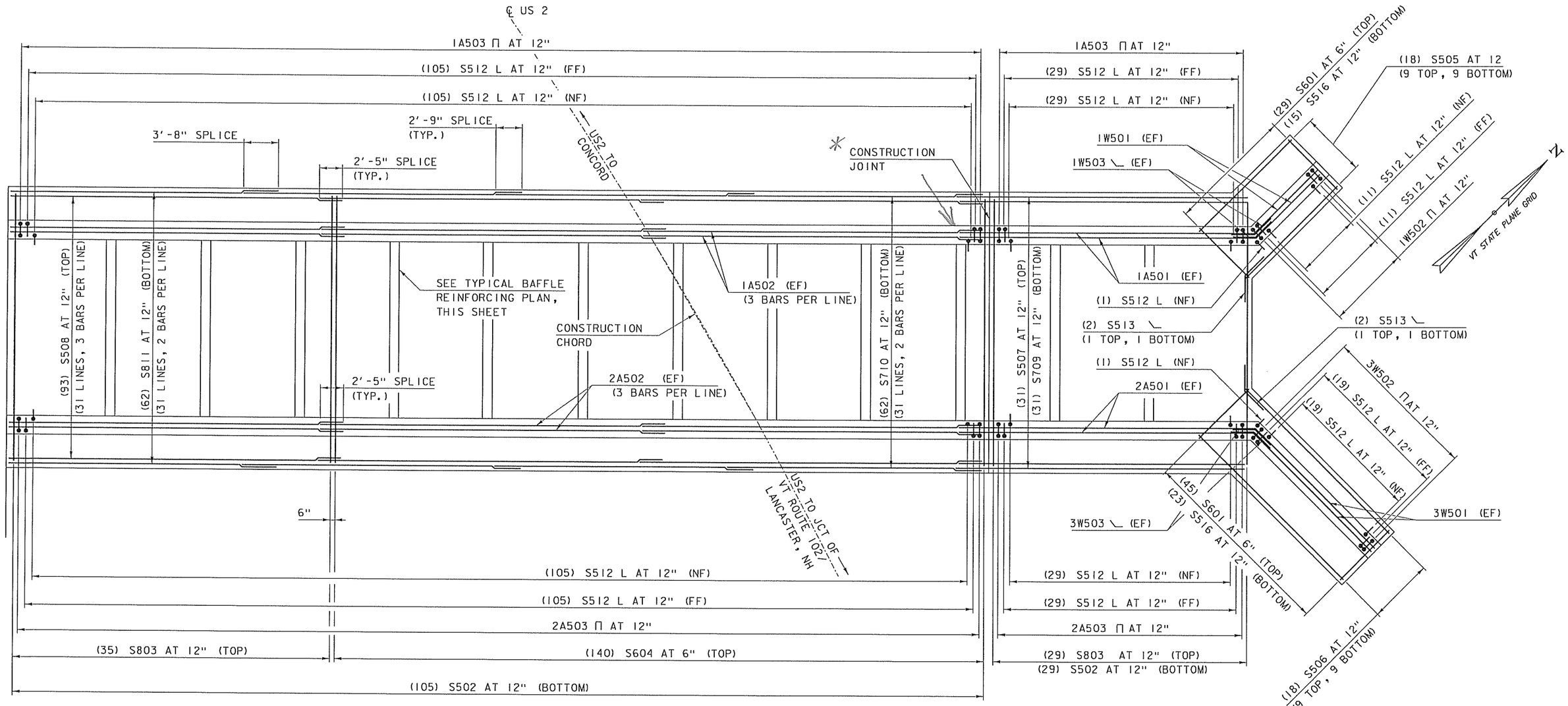

MAT FOUNDATION AND PEDESTAL WALL REINFORCING PLAN

SCALE: 3/16" = 1'-0"

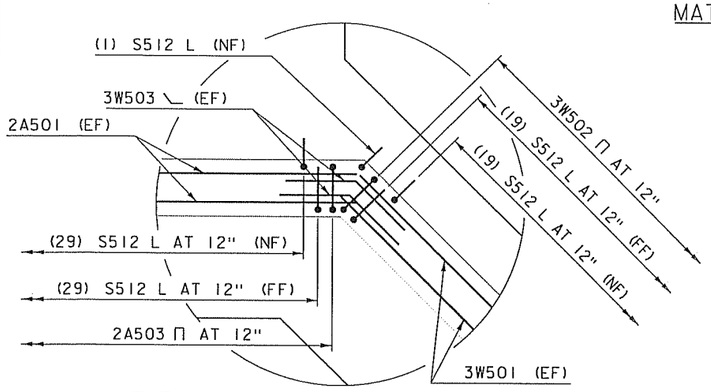

TYPICAL PEDESTAL WALL CORNER REINFORCING SECTION

(NE CORNER SHOWN, NW CORNER SIMILAR)

SCALE: 3/4" = 1'-0"

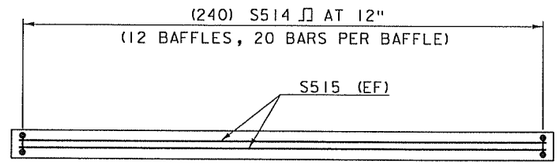

TYPICAL BAFFLE REINFORCING PLAN

SCALE: 3/8" = 1'-0"

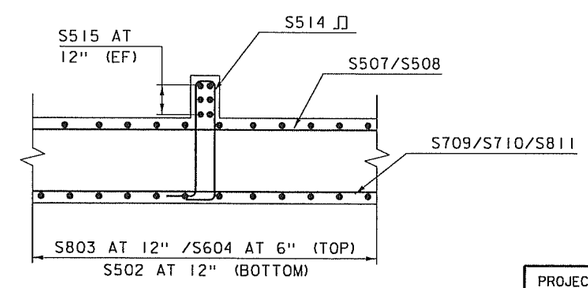

TYPICAL BAFFLE REINFORCING SECTION

SCALE: 3/8" = 1'-0"

* Construction Joint: Rebar overlap at construction joint is shown on wrong side of joint. See revised rebar schedule for adjusted bar lengths.

NOTES:

NF = NEAR FACE
FF = FAR FACE
EF = EACH FACE
3" CLEAR IN MAT FOUNDATION,
2" CLEAR AT ALL OTHER LOCATIONS.
2'-5" BAR LAP UNLESS OTHERWISE SPECIFIED ON THE PLANS

PROJECT NAME: LUNENBURG	
PROJECT NUMBER: NH CULV(27)	
FILE NAME: llb294/cos/zllb294sub.dgn	PLOT DATE: 8/6/2015
PROJECT LEADER: J. BYATT	DRAWN BY: M. SMITH
DESIGNED BY: S. BEAUMONT	CHECKED BY: N. CARON
SUBSTRUCTURE REINFORCING SHEET 1	SHEET 47 OF 74

CLD CONSULTING ENGINEERS

CLD 12-0106 MODEL: Sheet09

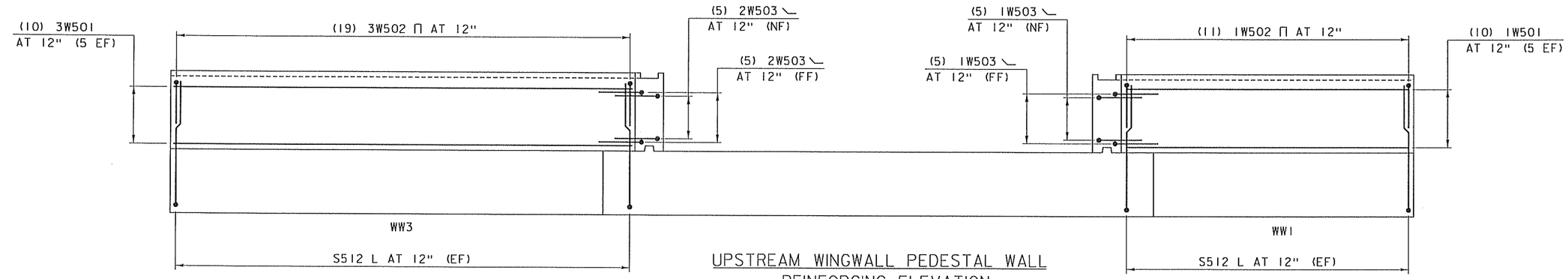

UPSTREAM WINGWALL PEDESTAL WALL
REINFORCING ELEVATION
SCALE: 3/8" = 1'-0"

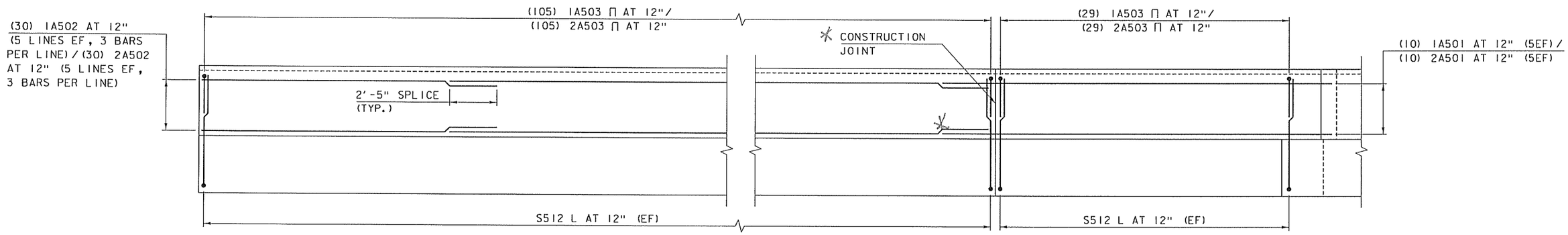

ARCH AND DOWNSTREAM WINGWALL PEDESTAL WALL
REINFORCING ELEVATION
SCALE: 3/8" = 1'-0"

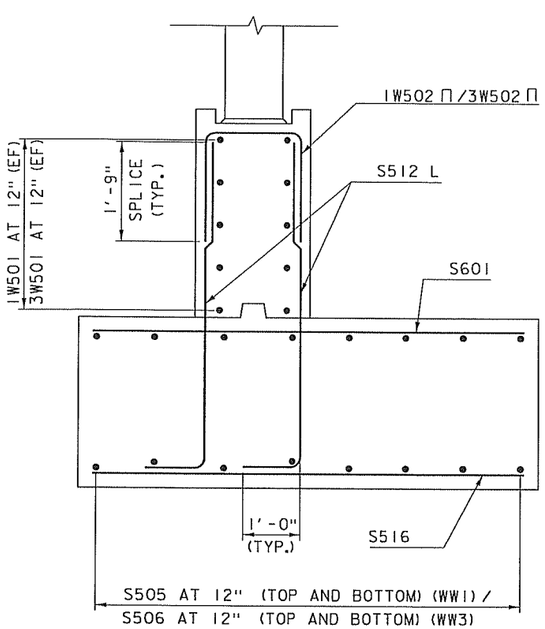

TYPICAL UPSTREAM WINGWALL FOOTING
REINFORCING SECTION
SCALE: 3/4" = 1'-0"

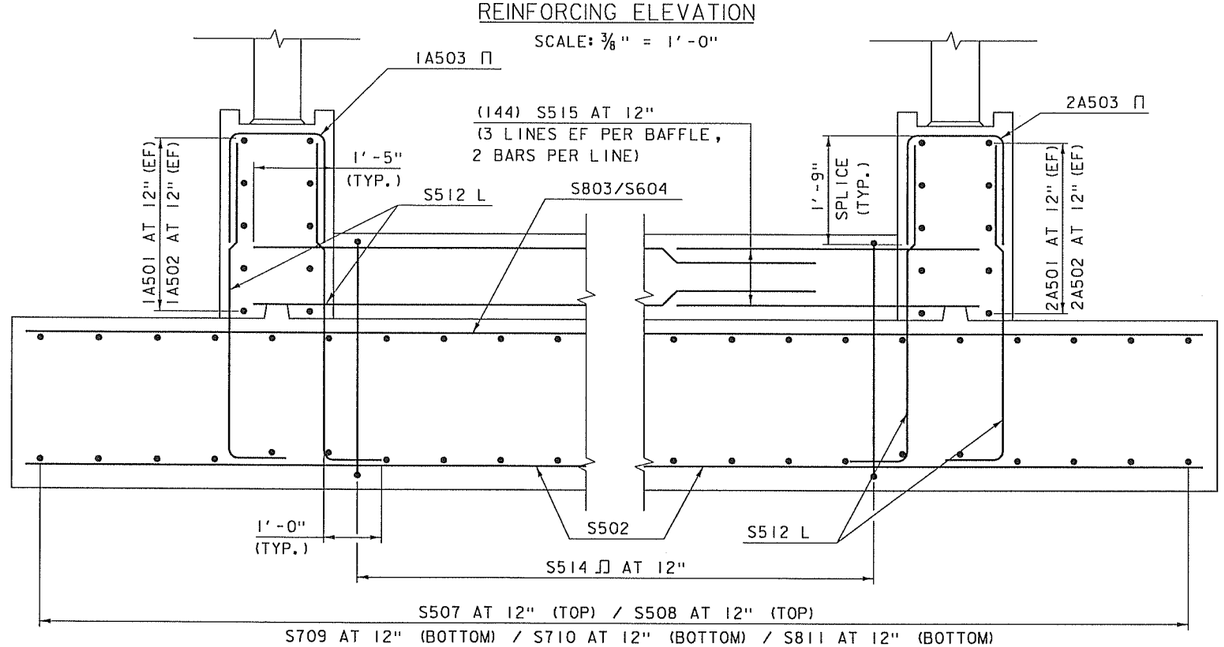

TYPICAL ARCH MAT FOUNDATION REINFORCING SECTION (AT BAFFLE)
(TYPICAL DOWNSTREAM WINGWALL MAT FOUNDATION REINFORCING SECTION SIMILAR)
SCALE: 3/4" = 1'-0"

* Construction Joint: Rebar overlap at Construction joint is shown on wrong side of joint. See revised rebar Schedule for adjusted bar lengths.

NOTES:

NF = NEAR FACE
FF = FAR FACE
EF = EACH FACE
3" CLEAR IN MAT FOUNDATION,
2" CLEAR AT ALL OTHER LOCATIONS.
2'-5" BAR LAP UNLESS OTHERWISE
SPECIFIED ON THE PLANS

PROJECT NAME: LUNENBURG	
PROJECT NUMBER: NH CULV(27)	
FILE NAME: llb294/cos/zllb294sub.dgn	PLOT DATE: 8/6/2015
PROJECT LEADER: J. BYATT	DRAWN BY: M. SMITH
DESIGNED BY: S. BEAUMONT	CHECKED BY: J. BYATT
SUBSTRUCTURE REINFORCING SHEET 2	SHEET 48 OF 74

CLD 12-0106 MODEL: Sheet10

STATE OF VERMONT
AGENCY OF TRANSPORTATION

REINFORCING STEEL SCHEDULE

ITEM	EACH	SIZE	LENGTH	MARK	TYPE	A	B	C	D	E	F	G	H	J	K	R	O
ARCH WALL #1 (WEST)																	
	10	5	31'- 4"	1A501	STR	31'- 4"											
	30	5	36'- 2"	1A502	STR	36'- 2"											
	134	5	5'- 2"	1A503	17		1'- 9"	1'- 8"	1'- 9"								
ARCH WALL #2 (EAST)																	
	10	5	31'- 4"	2A501	STR	31'- 4"											
	30	5	36'- 2"	2A502	STR	36'- 2"											
	134	5	5'- 2"	2A503	17		1'- 9"	1'- 8"	1'- 9"								
WINGWALL #1																	
	10	5	10'- 4"	1W501	STR	10'- 4"											
✳	12	5	5'- 2"	1W502	17		1'- 9"	1'- 8"	1'- 9"								
	10	5	4'- 10"	1W503	22		2'- 5"	2'- 5"	---				1'- 8.5"	---	1'- 8.5"	---	
WINGWALL #3																	
	10	5	18'- 4"	3W501	STR	18'- 4"											
	19	5	5'- 2"	3W502	17		1'- 9"	1'- 8"	1'- 9"								
	10	5	4'- 10"	3W503	22		2'- 5"	2'- 5"	---				1'- 8.5"	---	1'- 8.5"	---	
MAT FOUNDATION																	
	74	6	7'- 6"	S601	STR	7'- 6"											
	134	5	29'- 6"	S502	STR	29'- 6"											
✳	65	8	29'- 6"	S803	STR	29'- 6"											
	140	6	29'- 6"	S604	STR	29'- 6"											
	18	5	13'- 5"	S505	STR	13'- 5"											
	18	5	21'- 5"	S506	STR	21'- 5"											
	31	5	30'- 5"	S507	STR	30'- 5"											
	93	5	36'- 2"	S508	STR	36'- 2"											
	31	7	30'- 9"	S709	STR	30'- 9"											
	62	7	27'- 3"	S710	STR	27'- 3"											
	62	8	29'- 1"	S811	STR	29'- 1"											
	598	5	7'- 1"	S512	17		6'- 1"	1'- 0"	---								
	4	5	4'- 10"	S513	22		2'- 5"	2'- 5"	---				1'- 8.5"	---	1'- 8.5"	---	
	240	5	10'- 10"	S514	S5	1'- 0"	4'- 1"	0'- 8"	4'- 1"			1'- 0"					
	144	5	13'- 3"	S515	STR	13'- 3"											
	38	5	7'- 6"	S516	STR	7'- 6"											

ITEM	EACH	SIZE	LENGTH	MARK	TYPE	A	B	C	D	E	F	G	H	J	K	R	O

~ NOTES ~

1. UNLESS OTHERWISE DESIGNATED, ALL BAR REINFORCEMENT FOR CONCRETE IN SIZES UP TO AND INCLUDING NO. 18 SHALL CONFORM TO THE REQUIREMENTS OF THE "SPECIFICATIONS FOR DEFORMED BILLET-STEEL BARS FOR CONCRETE REINFORCEMENT", AASHTO M 31 (ASTM A 615-SI). ALL BARS SHALL BE GRADE 60, UNLESS OTHERWISE DESIGNATED.
2. FOR TYPICAL BENDING DETAILS, RECOMMENDED PIN DIAMETER "D" OF BENDS AND HOOKS, AND OTHER STANDARD PRACTICE, SEE CURRENT CONCRETE REINFORCING STEEL INSTITUTE "MANUAL OF STANDARD PRACTICE".
3. BARS WHICH REQUIRE MORE ACCURATE BENDING THAN STANDARD PRACTICES SHOULD HAVE LIMITS INDICATED.
4. ALL DIMENSIONS ARE OUT TO OUT OF BAR EXCEPT "A" AND "G" ON STANDARD 180 DEGREE AND 135 DEGREE HOOKS.
5. "J" DIMENSION ON 180 DEGREE HOOKS TO BE SHOWN ONLY WHERE NECESSARY TO RESTRICT HOOK SIZE. OTHERWISE, STANDARD HOOKS ARE TO BE USED.
6. "H" DIMENSION ON STIRRUPS TO BE SHOWN ONLY WHEN NECESSARY TO MAINTAIN CLEARANCES.
7. WHERE SLOPE DIFFERS FROM 45 DEGREES, DIMENSIONS "H" AND "K" MUST BE SHOWN.
8. ▲ DENOTES BARS TO BE CUT IN FIELD.
9. ✳ DENOTES ONE EXTRA BAR ADDED FOR TESTING PURPOSES.
10. △ DENOTES TWO EXTRA BARS ADDED FOR TESTING PURPOSES.
11. E IN BAR MARK PREFIX DENOTES EPOXY COATED REINFORCING STEEL.

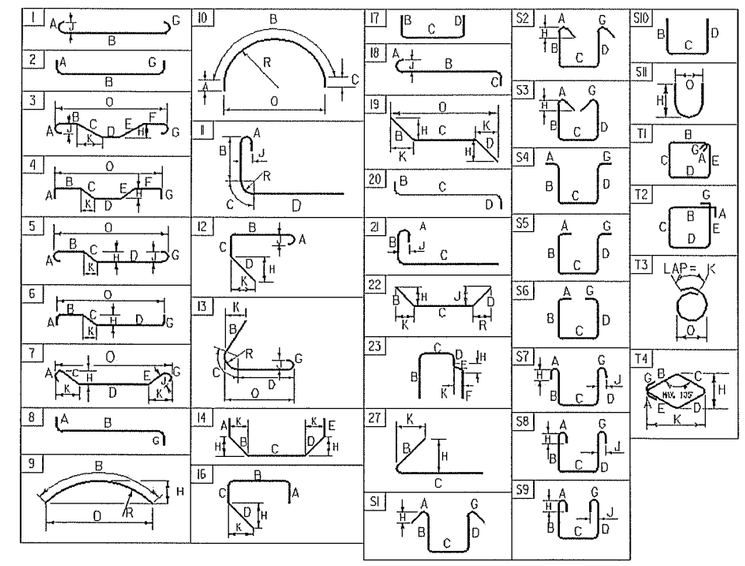

ASTM STANDARD REINFORCING BARS

BAR SIZE DESIGNATION	WEIGHT POUNDS PER FOOT	NOMINAL DIMENSIONS ROUND SECTION		
		DIAMETER INCHES	AREA INCHES^2	PERIMETER INCHES
#3	0.376	0.375	0.11	1.178
#4	0.668	0.500	0.20	1.571
#5	1.043	0.625	0.31	1.963
#6	1.502	0.750	0.44	2.356
#7	2.044	0.875	0.60	2.749
#8	2.670	1.000	0.79	3.142
#9	3.400	1.128	1.00	3.544
#10	4.303	1.270	1.27	3.990
#11	5.313	1.410	1.56	4.430
#14	7.65	1.693	2.25	5.32
#18	13.60	2.257	4.00	7.09

PROJECT NAME: LUNENBURG
PROJECT NUMBER: NH CULV(27)

FILE NAME: 10c412/cos/zllb294schedule.dgn
PROJECT LEADER: J. BYATT
DESIGNED BY: S. BEAUMONT
REINFORCING STEEL SCHEDULE

PLOT DATE: 8/6/2015
DRAWN BY: M. SMITH
CHECKED BY: N. CARON
SHEET 49 OF 74

CLD 12-0121 MODEL: Schedule