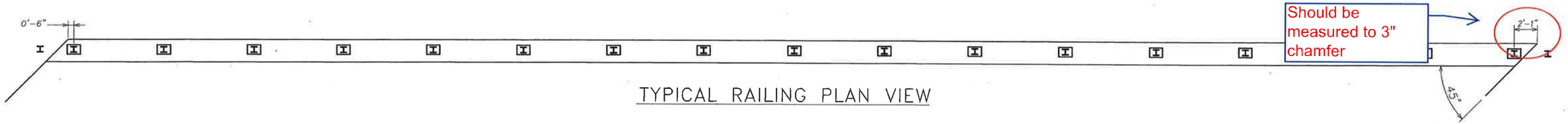

TYPICAL RAILING PLAN VIEW

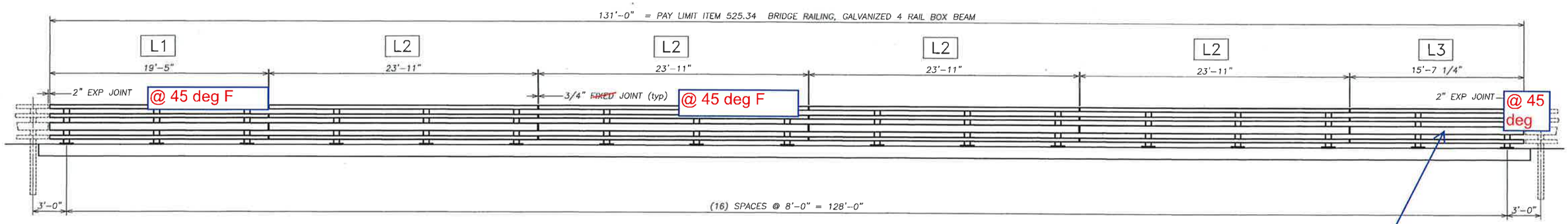

TYPICAL RAILING ELEVATION

LOOKING AT FACE OF RAIL FROM CENTERLINE OF ROAD
BOTH SIDES TYPICAL

Per rail note 4 in the contract plans, rail tubing shall be attached to a min of 3 posts

BILL OF MATERIAL

ITEM 525.34 BRIDGE RAILING, GALVANIZED 4 RAIL BOX BEAM (262 LF)

Qty	mk	Description	Spec.
34		BRIDGE RAILING POST W6 x 25 x 3'-5.375" OAH WITH 1 x 10 x 14 BASE PLATE (GLV)	A709 gr 50
10		SPLICE TUBE (FOR 8X4 RAIL) HSS 7 x 3 x 3/8 x 1'-8.000" OAL w/ TAPPED HOLES & 2 WELDED NUTS (GLV)	A500 gr B
30		SPLICE TUBE (FOR 4X4 RAIL) HSS 3 x 3 x 5/16 x 1'-8.000" OAL w/ TAPPED HOLES & 2 WELDED NUTS (GLV)	A500 gr B
2	L1	RAIL TUBE 8 x 4 x 5/16 (GALV) 19'-5.000" LG	A500 gr B
8	L2	RAIL TUBE 8 x 4 x 5/16 (GALV) 23'-11.000" LG	A500 gr B
2	L3	RAIL TUBE 8 x 4 x 5/16 (GALV) 15'-7.250" LG	A500 gr B
6	L1	RAIL TUBE 4 x 4 x 1/4 (GALV) 19'-5.000" LG	A500 gr B
24	L2	RAIL TUBE 4 x 4 x 1/4 (GALV) 23'-11.000" LG	A500 gr B
6	L3	RAIL TUBE 4 x 4 x 1/4 (GALV) 15'-7.250" LG	A500 gr B
34		ANCHOR SPACER PLATE PL 0.375 x 13.000 x 9.375	A709 gr 36
138		ANCHOR STUD DBL END PART THREAD - 1" DIA x 14.000 LG (GLV)	A449
276		HEAVY HEX NUT 1" (GLV)	A563 DH
138		ROUND WASHER (SAE) - 1" DIA SMALL (GLV)	F436
138		JAM NUT 1" (GALV)	A563 DH
272		ROUND HEAD POST BOLT slot or wrench head - no shoulder 3/4" DIA x 6" LG. FULL BODY (GLV)	A449 / A325
272		LOCK NUT 3/4" (GLV)	A563 DH
272		(3/4") PLAIN ROUND WASHER TYPE A (GALV) 0.750" DIA USS LARGE (HI-CARBON)	F844
160		(5/8") HEX HEAD BOLT (GALV) 0.625" DIA x 1.750" LG.	A325
160		(5/8") PLAIN ROUND WASHER (GALV) 0.625" USS LARGE	F844
80		3/4" SPACER PIPE 0.750" DIA. (SCH 40) x 1/2" LG.	A53 gr B
34		BEARING PAD 0.125" THICK x 10.000 x 14.000 (NEOPRENE 80 duro +/-10)	aashto M251

SUBMITTAL REVIEW

Review is only for general conformity to the contract drawings and specifications and shall not relieve the contractor of his entire responsibility under the contract, including among other things, dimensions to be confirmed and correlated at the job site, and information that pertains to the fabrication processes or to techniques of construction.

- ☐ NO EXCEPTIONS TAKEN
- ☐ MAKE CORRECTIONS NOTED RESUBMITTAL NOT REQUIRED
- ☑ AMEND AND RESUBMIT
- ☐ REJECTED - SEE REMARKS

PB AMERICAS, INC.

BY: Karin L. Dunn

DATE: 4/17/2015

No.	Remarks	Date
0	Initial submittal	3/30/15

REVISIONS

HIGHWAY SAFETY CORP
GLASTONBURY, CT
860-633-9445

ITEM 525.34 BRIDGE RAILING, GALVANIZED 4 RAIL BOX BEAM
ITEM 621.73 GUARDRAIL APPROACH SECTION, GALVANIZED 4 RAIL BOX BEAM
TH1 EAST RIVER ROAD BRIDGE #19
TOWN OF LINCOLN, VT ADDISON COUNTY
BRF 0188 (8)

AISC CERTIFIED FABRICATOR

GENERAL CONTRACTOR

SUB CONTRACTOR LAFAYETTE

HSC JOB NO. 2041

SHEET NO. 1 of 4

DRAWN PAR | CHECKED | DATE 03-27-15 | SCALE NONE | SIZE D

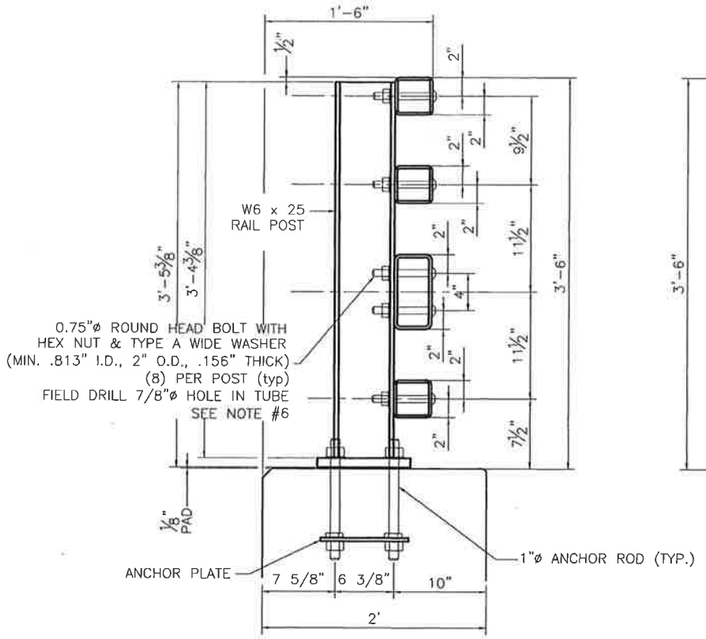

SECTION VIEW

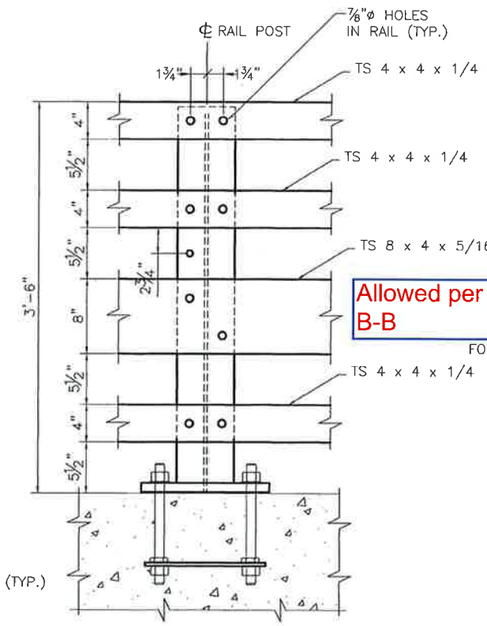

PARTIAL RAIL ELEVATION

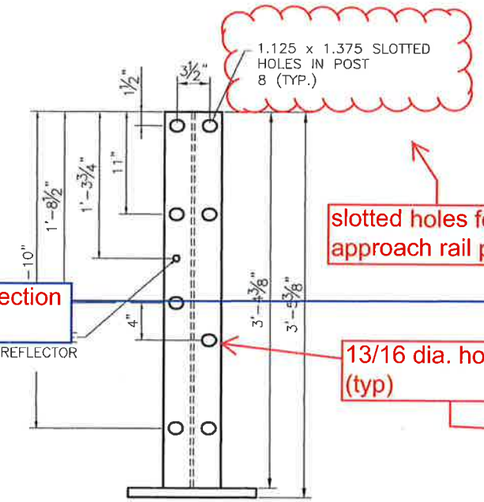

FRONT POST ELEVATION

slotted holes for approach rail posts

Allowed per section B-B

13/16 dia. holes (typ)

Rail tubing shall meet the longitudinal charpy v-notch requirements of 15 ft. lbs at 0 deg F. test samples shall be taken after forming the tubes.

NOTES:

1. ALL WORK AND MATERIALS SHALL CONFORM TO SECTION 525.

2. PRIOR TO GALVANIZING, ALL EXPOSED CUT OR SHEARED EDGES SHALL BE ROUNDED TO A 1/16" RADIUS AND BE FREE OF BURRS.

3. ALL POSTS SHALL BE SET NORM All ~~3~~

4. SECTIONS OF RAIL TUBE SHALL BE ATTACHED TO A MINIMUM OF TWO (2) RAIL POSTS AND PREFERABLY TO AT LEAST FOUR (4) POSTS.

5. AT INTERIOR SPLICES, PIPE SPACERS SHALL BE USED ON ONLY ONE SIDE OF THE SPLICE TO ALLOW MOVEMENT ON THAT SIDE, ~~THE TOP AND BOTTOM~~ RAIL SHALL RECEIVE THE SAME TREATMENT, AT END SPLICES PIPE SPACERS SHALL BE USED ON BOTH SIDE OF THE SPLICE TO ALLOW MOVEMENT ON EACH SIDE.

6. HOLES IN RAILS FOR RAIL TUBE ATTACHMENT SHALL BE FIELD-DRILLED. HOLES SHALL BE COATED WITH AND APPROVED ZINC-RICH PAINT DURING INSTALLATION.

7. RAIL POST ANCHORING NUTS at least two coats of FIT AND GIVEN AN ADDITIONAL ONE-EIGHTH TURN.

8. RAIL TUBES SHALL BE ATTACHED USING 3/4" FULL DIAMETER BODY ASTM A449 ~~ROUND HEAD BOLTS INSERTED THROUGH THE FACE OF THE TUBE~~. HOLES IN POSTS SHALL BE 1/16" LARGER THAN THE BOLT SIZE.

9. ANY BENDING OR CURVING OF RAIL SHALL BE DONE IN A FABRICATION PLANT IN ACCORDANCE WITH SUBMITTED PROCEDURES.

10. THE MINIMUM DISTANCE FROM A POST TO AN EXPANSION JOINT SHALL BE SUCH TO MAINTAIN MINIMUM EDGE DISTANCE OF 5" FROM ANY ANCHOR STUD TO THE END OF THE SLAB, OR TO THE EXPANSION JOINT RECESS POUR, IF ONE IS USED.

11. A DELINEATOR (SEE VAOT STANDARD DRAWING G-1 FOR DETAILS) SHALL BE INSTALLED AT NEAREST POST TO 30 FT SPACING. WHITE IS TO BE INSTALLED ON THE DRIVER'S RIGHT. FOR ONE WAY BRIDGES, YELLOW IS TO BE INSTALLED ON THE DRIVER'S LEFT. PAYMENT SHALL BE INCIDENTAL TO OTHER ITEMS.

~~12. THIS RAILING MEETS THE REQURIEMENTS FOR A TL-4 SERVICE LEVEL.~~

MATERIALS
RAIL TUBES.....ASTM A500 GRADE B OR ASTM A501
RAIL POSTS AND BASE PLATES.....ASTM A709/A709M, GRADE 50
ALL OTHER SHAPES AND PLATES.....ASTM A709/A709M, GARDE 36
ANCHOR STUDS.....ASTM A449
ALL OTHER BOLTS (UNLESS NOTED).....AASHTO M164, TYPE1

NUTS FOR AASHTO M164 BOLTS AND FOR ANCHOR STUDS SHALL COMPLY WITH AASTHO M291 (ASTM A563).

WASHERS SHALL COMPLY WITH AASHTO M293 (ASTM F436) SPECIFCATIONS.

1/8" PAD SHALL COMPLY WITH STANDARD SPECIFICATION SUBSECTION 731.01 OR 731.02.

RAIL POSTS AND BASE PLATES SHALL BE TESTED FOR IMPACT PROPERTIES IN ACCORDANCE WITH ASTM A370 CHARPY IMPACT TESTING USING TYPE A SPECIMEN.

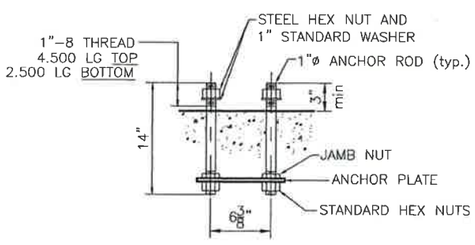

POST ANCHOR ASSEMBLY

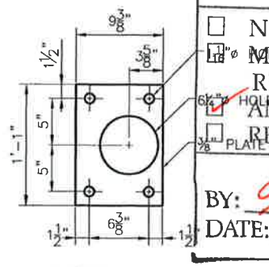

ANCHOR PLATE

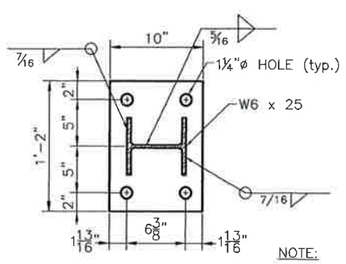

POST BASE PLATE
1" x 10" x 14" BASE PLATE

NOTE:
BEARING PAD TO HAVE SAME SHAPE AND DIMENSIONS AS BASE PLATE. except thickness = 1/8"

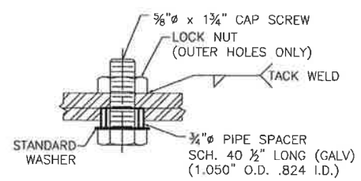

SPLICE BOLT SECTION

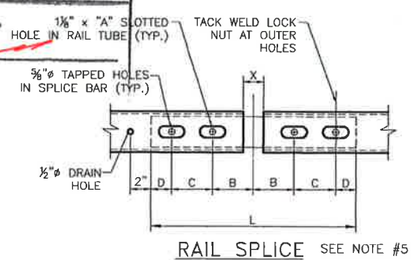

RAIL SPLICE SEE NOTE #5

SPLICE & EXPANSION JOINT TABLE

	"T"	"A"	"B"	"C"	"D"	"X"	"L"
	INTERIOR	2 1/2"	4"	4"	2"	3/4"	1'-8"
*	≤3 1/4"	2 1/2"	4"	4"	2"	2"	1'-8"
*	3 1/4"<T≤5 1/4"	3 1/2"	5"	5"	2 1/2"	3"	2'-1"

"T" = TOTAL REQUIRED MOVEMENT
* = END SPLICE BAR

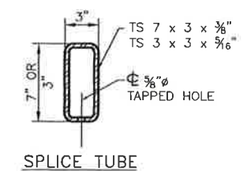

SPLICE TUBE SECTION

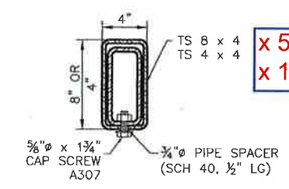

x 5/16"
x 1/4"

TYPICAL SPLICE ASSEMBLY
SEE NOTE #5

SUBMITTAL REVIEW

Review is only for general conformity to the contract drawings and specifications and shall not relieve the contractor of his entire responsibility under the contract, including, among other things, dimensions to be confirmed and correlated at the job site, and information that pertains to the fabrication processes or to techniques of construction.

☐ NO EXCEPTIONS TAKEN
☐ MAKE CORRECTIONS NOTED
☐ RESUBMITTAL NOT REQUIRED
☐ AMEND AND RESUBMIT
☐ REJECTED - SEE REMARKS

FB AMERICAS, INC.
BY: Kari L Yuan
DATE: 4/17/2015

HIGHWAY SAFETY CORP
GLASTONBURY, CT
860-633-9445

ITEM 525.34 BRIDGE RAILING, GALVANIZED 4 RAIL BOX BEAM
ITEM 621.73 GUARDRAIL APPROACH SECTION, GALVANIZED 4 RAIL BOX BEAM
TH1 EAST RIVER ROAD BRIDGE #19
TOWN OF LINCOLN, VT ADDISON COUNTY
BRF 01BB (8)

AISC CERTIFIED FABRICATOR

GENERAL CONTRACTOR
SUB CONTRACTOR: LAFAYETTE

HSC JOB NO. 2041
SHEET NO. 2 of 4

DRAWN	CHECKED	DATE	SCALE	SIZE
PAR		03-27-15	NONE	D

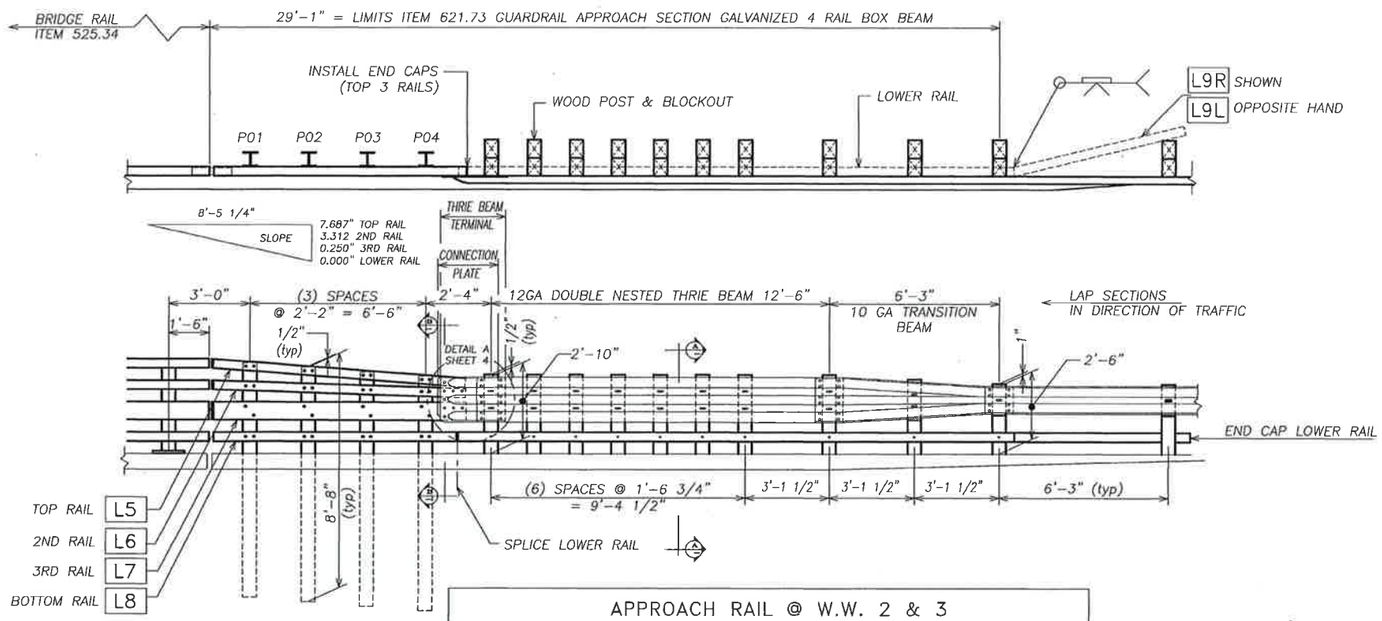

APPROACH RAIL @ W.W. 2 & 3

W.W. 1 APPROACH RAIL IS SIMILAR BUT OPPOSITE HAND

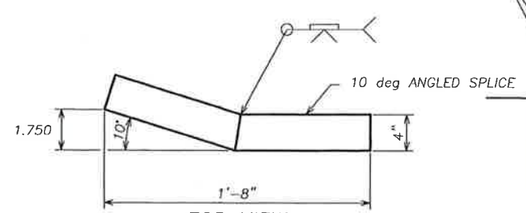

TOP VIEW
NOT TO SCALE

ANGLED FLAREBACK SPLICE DETAIL

SEE SHEET 2 FOR ADDITIONAL SPLICE DIMENSIONS

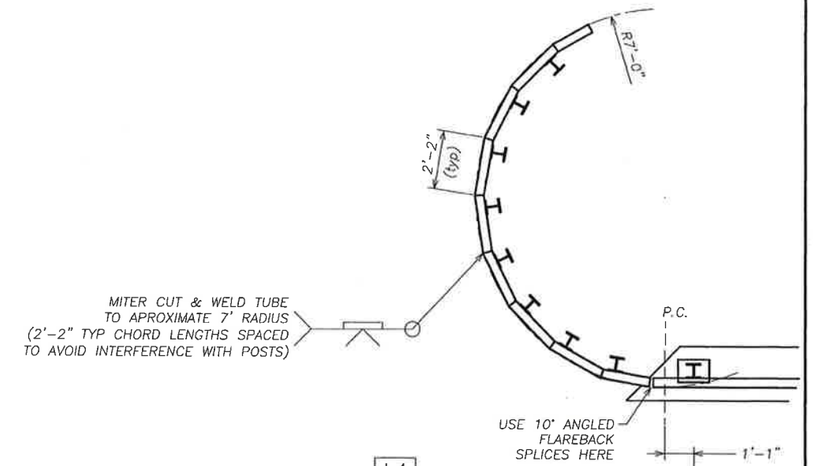

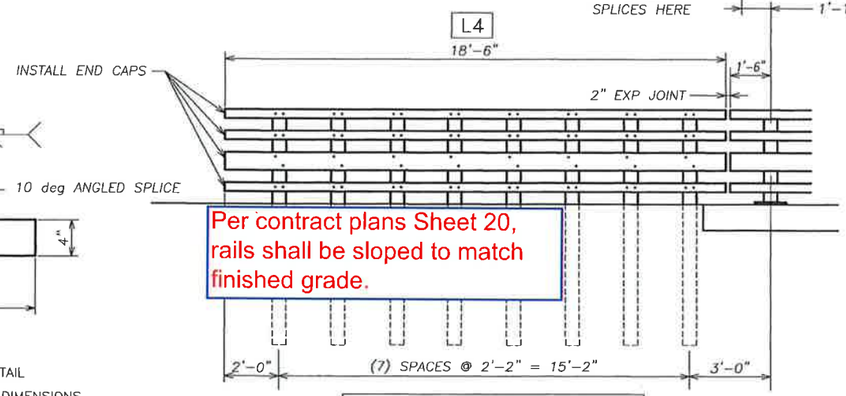

Per contract plans Sheet 20, rails shall be sloped to match finished grade.

APPROACH RAIL @ W.W. 4

BILL OF MATERIAL

ITEM 621.73 GUARDRAIL APPROACH SECTION GALVANIZED 4 RAIL BOX BEAM (3 EA)

Qty	mk	Description	Spec.
3	P01	W6x25 APPROACH POST - #1 x 8'-8" OAL (GALV)	A709 gr 50
3	P02	W6x25 APPROACH POST - #2 x 8'-8" OAL (GALV)	A709 gr 50
3	P03	W6x25 APPROACH POST - #3 x 8'-8" OAL (GALV)	A709 gr 50
3	P04	W6x25 APPROACH POST - #4 x 8'-8" OAL (GALV)	A709 gr 50
3	L5	UPPER RAIL APPROACH TUBE TS 4 x 4 x 1/4" (GALV.) 9'-4.000" OAL	A500 Gr. B
3	L6	SECOND RAIL APPROACH TUBE TS 4 x 4 x 1/4" (GALV.) 9'-4.000" OAL	
3	L7	THIRD RAIL APPROACH TUBE TS 8 x 4 x 5/16" (GALV.) 9'-4.000" OAL	A500 Gr. B
3	L8	LOWER RAIL APPROACH TUBE TS 4 x 4 x 1/4" (GALV.) 8'-11.625" OAL	A500 Gr. B
2	L9R	RIGHT HAND FLAREBACK TS 4 x 4 x 1/4 (GLV) 27'-0.4375" OAL	A500 Gr. B
1	L9L	LEFT HAND FLAREBACK TS 4 x 4 x 1/4 (GLV) 27'-0.4375" OAL	A500 Gr. B
3		CONNECTION PLATE PL 0.375" x 20.000" x 27.000" (GALV)	A709 gr 36
3		END CAP FOR 8x4 TUBE 0.187 THICK PLATE 8.000 x 4.000 w/ WELDED TABS (GALV)	A709 gr 36
9		END CAP FOR 4x4 TUBE 0.187 THICK PLATE 4.000 x 4.000 w/ WELDED TABS (GALV)	A709 gr 36
3		top rail SPLICE TUBE HSS 3 x 3 x 5/16 x 1'-8.000" OAL w/ TAPPED HOLES & 2 WELDED NUTS (GLV) **(angled down)**	A500 gr B
3		2nd rail SPLICE TUBE HSS 3 x 3 x 5/16 x 1'-8.000" OAL w/ TAPPED HOLES & 2 WELDED NUTS (GLV) **(angled down)**	A500 gr B
3		3rd rail SPLICE TUBE (FOR 8X4 RAIL) HSS 7 x 3 x 3/8 x 1'-8.000" OAL w/ TAPPED HOLES & 2 WELDED NUTS (GLV) straight	A500 gr B
3		bottom rail SPLICE TUBE (FOR 4X4 RAIL) HSS 3 x 3 x 5/16 x 1'-8.000" OAL w/ TAPPED HOLES & 2 WELDED NUTS (GLV) straight	A500 gr B
24	4RR	WOOD POST 6 x 8 x 7'-0" (for thrie beam w/ rub rail hole)	TIMBER
24		WOOD BLOCKOUT 6 x 8 x 22.500	TIMBER
3	TRR	WOOD POST 6 x 8 x 7'-0" (for thrie transition w/ rub rail hole)	TIMBER
3		WOOD BLOCKOUT 6 x 8 x 18.000	TIMBER
3	R	WOOD POST 6 x 8 x 7'-0" (for w-beam rail w/ rub rail hole)	TIMBER
3		WOOD BLOCKOUT 6 x 8 x 14.000	TIMBER
30		WOOD BLOCKOUT 6 x 8 x 4.000 (for rubrail blockout)	TIMBER
3		THRIE FLAT LIP BRIDGE SHOE (MODIFIED) 10 GA. GALV	aashto M180 B2
3		THRIE TRANSITION PANEL 6'-3" / 3'-1 1/2" 10 GA. GALV.	aashto M180 B2
6		THRIE PANEL 12'-6" / 1'-6 3/4" 12 GA. GALV.	aashto M180 A2
120		ROUND HEAD POST BOLT slot or wrench head - no shoulder 3/4" DIA x 6" LG. FULL BODY (GLV)	A449 / A325
120		LOCK NUT 3/4" (GLV)	A563 DH
120		(3/4") PLAIN ROUND WASHER TYPE A (GALV) 0.750" DIA USS LARGE (HI-CARBON)	F844
48		(5/8") HEX HEAD BOLT (GALV) 0.625" DIA x 1.750" LG.	A325
48		(5/8") PLAIN ROUND WASHER (GALV) 0.625" USS LARGE	F844
48		3/4" SPACER PIPE 0.750" DIA. (SCH 40) x 1/2" LG.	A53 gr B
3		ROUND HEAD POST BOLT slot or wrench head - no shoulder 3/4" DIA x 2" LG. (GLV) w/ HEX NUT	A449
48		ROUND HEAD POST BOLT - oval shoulder 5/8" DIA x 1'-8" LG. (GALV) w/ DBL RECESS NUT, FLAT WASHER	A307
36		ROUND HEAD POST BOLT - oval shoulder 5/8" DIA x 1'-6" LG. (GALV) w/ DBL RECESS NUT, FLAT WASHER	A307
96		PANEL SPLICE BOLT 5/8 x 1-1/4" (GALV) w/ DOUBLE RECESSED NUT	A307
84		RECTANGULAR PLATE WASHER 0.187 x 1.750 x 3.000 (GALV)	A709 gr 36

BILL OF MATERIAL

ITEM 621.73 GUARDRAIL APPROACH SECTION GALVANIZED 4 RAIL BOX BEAM (1 EA @ WW 4)

Qty	mk	Description	Spec.
8	WW4	W6x25 APPROACH POST x 8'-8" OAL (GALV)	A709 gr 50
1		SPLICE TUBE (FOR 8X4 RAIL) HSS 7 x 3 x 3/8 x 1'-8.000" OAL w/ TAPPED HOLES & 2 WELDED NUTS (GLV) **(flareback 10 deg)**	A500 gr B
3		SPLICE TUBE (FOR 4X4 RAIL) HSS 3 x 3 x 5/16 x 1'-8.000" OAL w/ TAPPED HOLES & 2 WELDED NUTS (GLV) **(flareback 10 deg)**	A500 gr B
1	L4	RAIL TUBE 8 x 4 x 5/16 (GALV) 18'-6.000" LG **miter cut & weld for 7' radius**	A500 gr B
3	L4	RAIL TUBE 4 x 4 x 1/4 (GALV) 18'-6.000" LG **miter cut & weld for 7' radius**	A500 gr B
1		END CAP FOR 8x4 TUBE 0.187 THICK PLATE 8.000 x 4.000 w/ WELDED TABS (GALV)	A709 gr 36
3		END CAP FOR 4x4 TUBE 0.187 THICK PLATE 4.000 x 4.000 w/ WELDED TABS (GALV)	A709 gr 36
64		ROUND HEAD POST BOLT slot or wrench head - no shoulder 3/4" DIA x 6" LG. FULL BODY (GLV)	A449 / A325
64		LOCK NUT 3/4" (GLV)	A563 DH
64		(3/4") PLAIN ROUND WASHER TYPE A (GALV) 0.750" DIA USS LARGE (HI-CARBON)	F844
16		(5/8") HEX HEAD BOLT (GALV) 0.625" DIA x 1.750" LG.	A325
16		(5/8") PLAIN ROUND WASHER (GALV) 0.625" USS LARGE	F844
16		3/4" SPACER PIPE 0.750" DIA. (SCH 40) x 1/2" LG.	A53 gr B

SUBMITTAL REVIEW

Review is only for general conformity to the contract drawings and specifications and shall not relieve the contractor of his entire responsibility under the contract, including among other things, dimensions to be confirmed and correlated at the job site, and information that pertains to the fabrication processes or to techniques of construction.

- ☐ NO EXCEPTIONS TAKEN
- ☐ MAKE CORRECTIONS NOTED
- RESUBMITTAL NOT REQUIRED
- ☑ AMEND AND RESUBMIT
- ☐ REJECTED - SEE REMARKS

PB AMERICAS, INC.

BY: Ravi Patel

DATE: 4/17/2015

HIGHWAY SAFETY CORP
GLASTONBURY, CT
860-633-9445

ITEM 525.34 BRIDGE RAILING, GALVANIZED 4 RAIL BOX BEAM
ITEM 621.73 GUARDRAIL APPROACH SECTION, GALVANIZED 4 RAIL BOX BEAM
TH1 EAST RIVER ROAD BRIDGE #19
TOWN OF LINCOLN, VT ADDISON COUNTY
BRF 0188 (8)

AISC CERTIFIED FABRICATOR

GENERAL CONTRACTOR

SUB CONTRACTOR: LAFAYETTE

HSC JOB NO. 2041

SHEET NO. 3 of 4

DRAWN	CHECKED	DATE	SCALE	SIZE
PAR		03-27-15	NONE	D

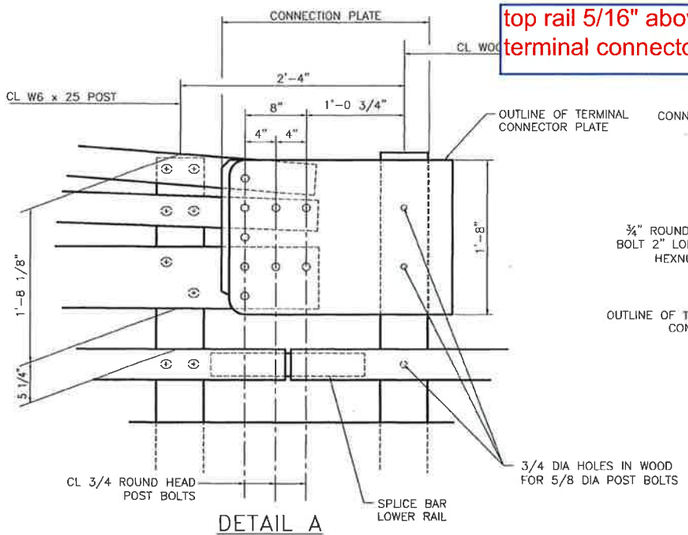

DETAIL A

FROM SHEET 3

PORTIONS OF OVERLAPPING THRIE BEAM RAIL AND TERMINAL CONNECTOR ELIMINATED FROM THIS VIEW FOR CLARITY

top rail 5/16" above terminal connector

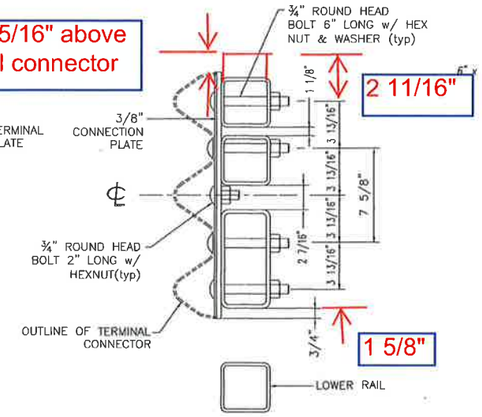

SECTION B–B

FROM SHEET 3

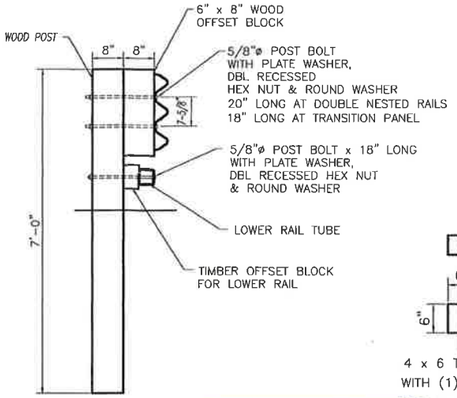

SECTION A–A

FROM SHEET 3

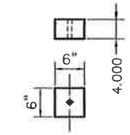

4 x 6 TIMBER BLOCK WITH (1) 3/4"ø THRU HOLE FOR LOWER RAIL

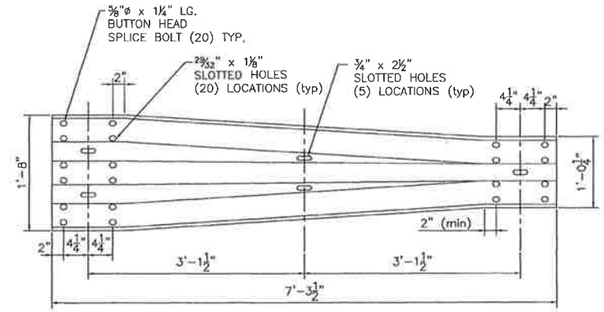

THRIE TRANSITION PANEL

10 GAUGE (AASHTO M180 B2)

Please verify that this chart is still OK, after comments are addressed

STEEL POST CHART

No.	A	B	C
P01	10.250	19.250	32.687
P02	9.125	17.312	30.750
P03	8.000	15.437	28.750
P04	6.875	13.500	24.812

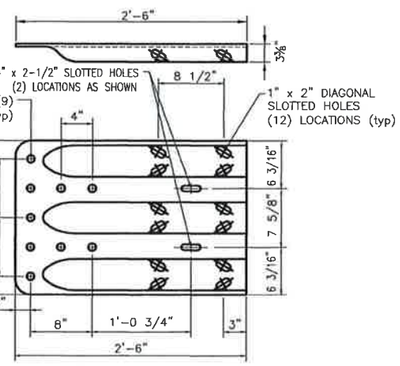

TERMINAL CONNECTOR

10 GAUGE (AASHTO M180 B2)

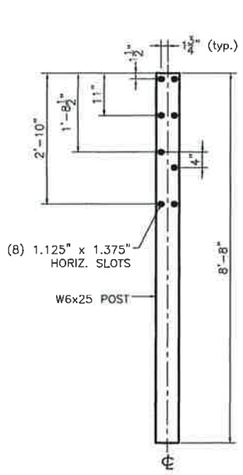

STEEL POST

AT WINGWALL 4

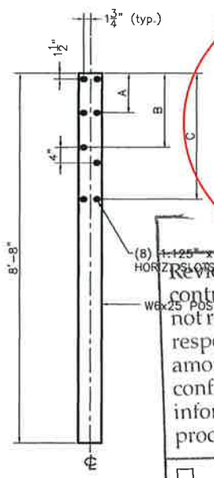

STEEL POST

AT WINGWALLS 1, 2 & 3

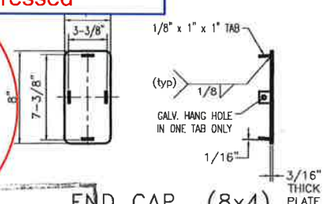

END CAP (8x4)

3/16" x 8" x 4"

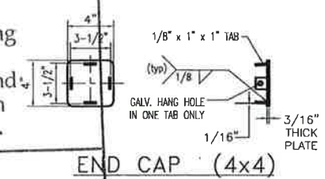

END CAP (4x4)

3/16" x 4" x 4"

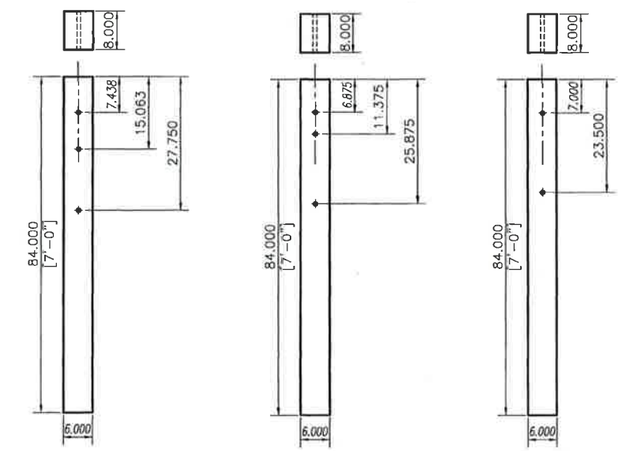

6 x 8 TIMBER POST WITH (3) 3/4"ø THRU HOLES mk–4RR

6 x 8 TIMBER POST WITH (3) 3/4"ø THRU HOLES mk–TRR

6 x 8 TIMBER POST WITH (2) 3/4"ø THRU HOLE mk–R

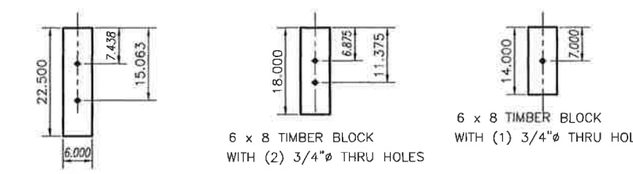

6 x 8 TIMBER BLOCK WITH (2) 3/4"ø THRU HOLES

6 x 8 TIMBER BLOCK WITH (2) 3/4"ø THRU HOLES

6 x 8 TIMBER BLOCK WITH (1) 3/4"ø THRU HOLE

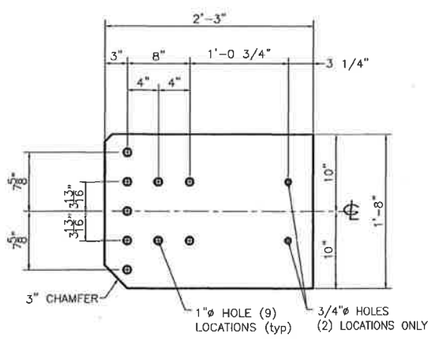

CONNECTION PLATE

3/8" x 1'-8" x 2'-3"

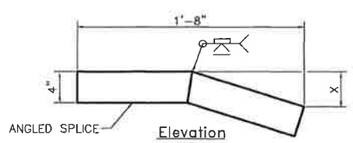

Elevation

NOT TO SCALE

ANGLED SPLICE DIMENSION

SEE SHEET 2 FOR ADDITIONAL SPLICE DETAILS

X	
TOP SPLICE	SECOND SPLICE
.687"	.375"

NOTE:
THIRD SPLICE TO BE PROVIDED STRAIGHT DUE TO A VERY SHALOW "X" DIMENSION.

SUBMITTAL REVIEW

Review is only for general conformity to the contract drawings and specifications and shall not relieve the contractor of his entire responsibility under the contract, including among other things, dimensions to be confirmed and correlated at the job site, and information that pertains to the fabrication processes or to techniques of construction.

- ☐ NO EXCEPTIONS TAKEN
- ☐ MAKE CORRECTIONS NOTED
- RESUBMITTAL NOT REQUIRED
- ☑ AMEND AND RESUBMIT
- ☐ REJECTED - SEE REMARKS

PB AMERICAS, INC.

BY: Ravi C. Varma

DATE: 4/17/2015

NOTES:

1. ALL BRIDGE APPROACH RAIL MATERIALS, DIMENSIONS, SIZES, AND NOTES SHALL BE THE SHAME AS THOSE OF THE BRIDGE RAIL UNLESS OTHERWISE NOTED. SEE BRIDGE RAIL SHEETS FOR NOTES AND ADDITIONAL INFORMATION.
2. CARRIAGE BOLTS SHALL BE ASTM A307, AND NUTS SHALL BE ASTM A563 GRADE A OR BETTER (GALVANIZED).
3. WELD SPLICE BAR AND RAIL TUBES TO FIT BEND. USE COMPLETE JOINT PENETRATION BUTT WELD (B–U2).
4. PAYMENT FOR GUARDRAIL APPROACH SECTION, GALVANIZED 4 RAIL BOX BEAM SHALL INCLUDE THE TERMINAL CONNECTOR, THE CONNECTION PLATE, RAIL, POSTS, BLOCKS AND ATTACHMENT HARDWARE.
5. ALL APPROACH SPLICES SHALL BE LAPPED IN THE DIRECTION OF TRAFFIC
6. SEE SHEET 3 FOR ADDITIONAL MODIFIED APPROACH DETAILS AT WINGWALL 4

HIGHWAY SAFETY CORP
GLASTONBURY, CT
860–633–9445

ITEM 525.34 BRIDGE RAILING, GALVANIZED 4 RAIL BOX BEAM
ITEM 621.73 GUARDRAIL APPROACH SECTION, GALVANIZED 4 RAIL BOX BEAM
TH1 EAST RIVER ROAD BRIDGE #19
TOWN OF LINCOLN, VT ADDISON COUNTY
BRF 0188 (8)

AISC CERTIFIED FABRICATOR

GENERAL CONTRACTOR

SUB CONTRACTOR: LAFAYETTE

AISC JOB NO. 2041

SHEET NO. 4 of 4

DRAWN	CHECKED	DATE	SCALE	SIZE
PAR		03–27–15	NONE	D

Highway Safety Corporation

Glastonbury, CT

Welding Procedure Specification

Material specification **A572 gr 50, A709 Gr 50**

Welding process **Gas Metal Arc Welding (GMAW) Spray Transfer**

Manual, semi-automatic, or automatic **Semi-Automatic**

Position of welding **Flat (1F) or Horizontal (2F)**

Filler metal specification **AWS A5.18**

Filler metal classification **ER70S-6**

Electrode and manufacturer **Lincoln Electric Lincoln Weld L-56**

Flux and manufacturer **N/A**

Shielding gas **86% Argon / 14% CO2** Flow rate **35-45 CFM**

Single or multiple pass **Single or Multiple**

Single or multiple arc **Single**

Welding current **DCEP**

Polarity **Reverse - electrode positive**

Welding progression **Stringers**

Root treatment **clean base metal**

Preheat and interpass temperature **base metal up to 3/4" (50°F) ; over 3/4 thru 1-1/2" (150°F) : over 1-1/2" thru 2-1/2" (225°F)**

Postheat treatment **None**

Electrode extension **3/4" ± 1/4"**

WELDING PROCEDURE

Weld size	Pass no.	Electrode size	Welding parameters Amperes	Welding parameters Volts	Travel speed
5/16"	**1**	**0.062"**	**300 A ± 30**	**29 V ± 2**	**15 ipm ± 2**
7/16"	**1 & 2**	**0.062"**	↓	↓	**15 ipm ± 2**

Joint detail

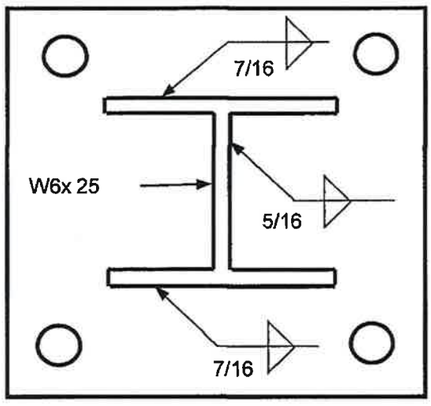

APPROVED

By Jeff Clark (jeff.clark@state.vt.us) at 12:22 pm, Apr 17, 2015

This procedure may vary due to fabrication sequence, fit-up, pass size, etc. within the limitation of variables given in section 5 of latest edition AWS D1.5

WPS no. **W-VTPEDPOST1**

Revision no. **0**

Supporting PQR no. **Pre-Qualified**

Project Name **Lincoln, VT**

Fabricator **Highway Safety Corporation**

Prepared By: **Paul Radice**

Date **03-30-15**

Project Number **BRF 0188 (8)**

Highway Safety Corporation

Glastonbury, CT

Welding Procedure Specification

Material specification **ASTM A500 gr B**

Welding process **Gas Metal Arc Welding (GMAW)**

Manual, semi-automatic, or automatic **Semi-Automatic**

Position of welding **Flat (1F) or Horizontal (2F)**

Filler metal specification **AWS A5.18**

Filler metal classification **ER70S-6**

Electrode and manufacturer **Lincoln Electric Lincoln Weld L-56**

Flux and manufacturer **N/A**

Shielding gas **86% Argon / 14% CO2** Flow rate **35-45 CFM**

Single or multiple pass **Single**

Single or multiple arc **Single**

Welding current **DCEP**

Polarity **Reverse - electrode positive**

Welding progression **Stringers**

Root treatment **clean base metal**

Preheat and interpass temperature **base metal up to 3/4" (50°F)**

Postheat treatment **None**

Electrode extension **3/4" ± 1/4"**

WELDING PROCEDURE

Weld size	Pass no.	Electrode size	Welding parameters		Travel speed	Joint detail
			Amperes	Volts		
	1	0.063"	300 A ± 30	29 V ± 2	15 lpm ± 2	B-U2a-GF 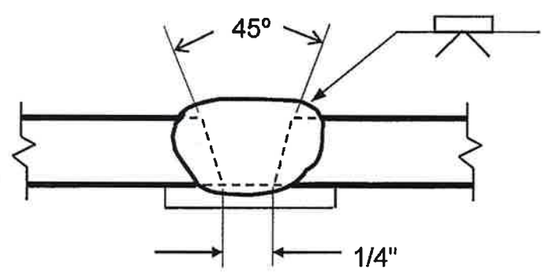

APPROVED

By Jeff Clark (jeff.clark@state.vt.us) at 12:23 pm, Apr 17, 2015

This procedure may vary due to fabrication sequence, fit-up, pass size, etc. within the limitation of variables given in section 5 of latest edition AWS D1.1

WPS no. **W-VGwBCK**

Revision no. **0**

Supporting PQR no. **Pre-Qualified**

Project Name **Lincoln, VT**

Fabricator **Highway Safety Corporation**

Prepared By: **Paul Radice**

Date **03-30-15**

Project Number **BRF 0188 (8)**