STATE OF VERMONT
AGENCY OF TRANSPORTATION

PRELIMINARY INFORMATION SHEET (BRIDGE)

Version 11.08.15

LRFD

INDEX OF SHEETS

PLAN SHEETS

STANDARDS LIST

FINAL HYDRAULIC REPORT – BRIDGE NO. 7

HYDROLOGIC DATA

Date: 7 January 2014

DRAINAGE AREA : 2.03 sq. mi.
CHARACTER OF TERRAIN : Hilly to mountainous; forested with some clearings; small pond
STREAM CHARACTERISTICS : Moderate slope, perennial, sinuous
NATURE OF STREAMBED : Gravelly sand; scour susceptible

PEAK FLOW DATA

Q 2.33 =	100 cfs	Q 50 =	380 cfs
Q 10 =	230 cfs	Q 100 =	450 cfs
Q 25 =	300	Q 500 =	675 cfs

DATE OF FLOOD OF RECORD : Unknown
ESTIMATED DISCHARGE: Unknown
WATER SURFACE ELEV.: Unknown
NATURAL STREAM VELOCITY : @ Q50 (without tailwater) = 8.0 cfs
ICE CONDITIONS : Light
DEBRIS: Moderate
DOES THE STREAM REACH MAXIMUM HIGHWATER ELEV. RAPIDLY? No
IS ORDINARY RISE RAPID? No
IS STAGE AFFECTED BY UPSTREAM OR DOWNSTREAM CONDITIONS? Yes
IF YES, DESCRIBE: The tailwater of the adjacent downstream Black River creates an outlet control condition in the subject culvert.

WATERSHED STORAGE: <1%
HEADWATERS:
UNIFORM: X
IMMEDIATELY ABOVE SITE:

EXISTING STRUCTURE INFORMATION

STRUCTURE TYPE: 8' diameter multi-plate pipe (CGMP)
YEAR BUILT: 1923
CLEAR SPAN(NORMAL TO STREAM): 8.0'
VERTICAL CLEARANCE ABOVE STREAMBED: 8.0'
WATERWAY OF FULL OPENING: 50.2 sq. ft.
DISPOSITION OF STRUCTURE: Remove and replace
TYPE OF MATERIAL UNDER SUBSTRUCTURE: See borings

WATER SURFACE ELEVATIONS AT:

Q2.33 =	797.4'	VELOCITY =	12.4 fps
Q10 =	799.8'	"	15.2 fps
Q25 =	800.9'	"	16.1 fps
Q50 =	802.2'	"	17.0 fps
Q100 =	803.2'	"	17.7 fps

LONG TERM STREAMBED CHANGES: None noted

IS THE ROADWAY OVERTOPPED BELOW Q100: No
FREQUENCY: N/A
RELIEF ELEVATION: 803.7'
DISCHARGE OVER ROAD @Q100: None

UPSTREAM STRUCTURE

TOWN: Irasburg
HIGHWAY # : TH 4
CLEAR SPAN: 3.0'
YEAR BUILT:
STRUCTURE TYPE: (2) 3' Dia. pipes
DISTANCE: 6800'
STRUCTURE #: BR 12
CLEAR HEIGHT: 3.0'
FULL WATERWAY:

DOWNSTREAM STRUCTURE

TOWN: Irasburg
HIGHWAY # :
CLEAR SPAN:
YEAR BUILT:
STRUCTURE TYPE: Confluence w/ Black River
DISTANCE: 100'
STRUCTURE #:
CLEAR HEIGHT:
FULL WATERWAY:

LRFR LOAD RATING FACTORS

LOADING LEVELS	TRUCK						
	H-20	HL-93	3S2	6 AXLE	3A. STR.	4A. STR.	5A. SEMI
TONNAGE	20	36	36	66	30	34.5	38
INVENTORY							
POSTING							
OPERATING							
COMMENTS:							

PROPOSED STRUCTURE

STRUCTURE TYPE: Precast Concrete Box Culvert

CLEAR SPAN(NORMAL TO STREAM): 20.0'
VERTICAL CLEARANCE ABOVE STREAMBED: 7.0'
WATERWAY OF FULL OPENING: 140 sq. ft.

WATER SURFACE ELEVATIONS AT:

Q2.33 =	797.0'	VELOCITY=	6.5 fps
Q10 =	797.1'	"	9.0 fps
Q25 =	797.1'	"	10.0 fps
Q50 =	797.2'	"	11.0 fps
Q100 =	797.4'	"	11.7 fps

IS THE ROADWAY OVERTOPPED BELOW Q100: No
FREQUENCY: N/A
RELIEF ELEVATION: 803.9'
DISCHARGE OVER ROAD @Q100: None

AVERAGE LOW ELEVATION OF SUPERSTRUCTURE: 798.70'
VERTICAL CLEARANCE: @ Q50 = 1.5'

SCOUR: Replacement structure is a box culvert so scour is not a concern.

REQUIRED CHANNEL PROTECTION: Stone Fill, Type III

PERMIT INFORMATION

		DEPTH OR ELEVATION:
AVERAGE DAILY FLOW:	4.0 cfs	
ORDINARY LOW WATER:	2.0 cfs	Depth = 0.5'
ORDINARY HIGH WATER:	60 cfs	Depth = 1.0'

TEMPORARY BRIDGE REQUIREMENTS

STRUCTURE TYPE: Temporary Bridge not Required
CLEAR SPAN (NORMAL TO STREAM): N/A
VERTICAL CLEARANCE ABOVE STREAMBED: N/A
WATERWAY AREA OF FULL OPENING: N/A

ADDITIONAL INFORMATION

The Black River tailwater was considered in the hydraulic analyses of the ex./prop. structures by applying a tailwater at elevation 797.0 for all storm events to determine headwater elevations; this represents flood stage elevation for the Black River based on nearby USGS gauging stage information. Normal tailwater depth of flow was used to determine stream velocities.

TRAFFIC MAINTENANCE NOTES

1. MAINTAIN ONE-WAY TRAFFIC UNDER PHASED CONSTRUCTION.
2. TRAFFIC SIGNALS ARE NECESSARY.
3. SIDEWALKS ARE NOT NECESSARY

DESIGN VALUES

1. DESIGN LIVE LOAD		HL-93
2. FUTURE PAVEMENT	d_p:	3.0 INCH
3. DESIGN SPAN	L:	20.0 FT
4. MIN. MID-SPAN POS. CAMBER @ RELEASE (PRESTRESSED UNITS)	Δ:	- - -
5. PRESTRESSING STRAND (0.60 INCH DIAMETER - LOW RELAX)	f_y:	
6. PRESTRESSED CONCRETE STRENGTH	f'_c:	
7. PRESTRESSED CONCRETE RELEASE STRENGTH	f'_{ci}:	
8. CONCRETE, HIGH PERFORMANCE CLASS AA	f'_c:	
9. CONCRETE, HIGH PERFORMANCE CLASS A	f'_c:	- - -
10. CONCRETE, HIGH PERFORMANCE CLASS B	f'_c:	3.5 KSI
11. CONCRETE, CLASS C	f'_c:	- - -
12. REINFORCING STEEL	f_y:	60 KSI
13. STRUCTURAL STEEL AASHTO M270	f_y:	- - -
14. SOIL UNIT WEIGHT	γ:	0.140 KCF
15. NOMINAL BEARING RESISTANCE OF SOIL	q_n:	* 3.3 KSF
16. SOIL BEARING RESISTANCE FACTOR (REFER TO AASHTO LRFD)	ϕ:	0.45
17. NOMINAL BEARING RESISTANCE OF ROCK	q_n:	- - -
18. ROCK BEARING RESISTANCE FACTOR (REFER TO AASHTO LRFD)	ϕ:	- - -
19. NOMINAL AXIAL PILE RESISTANCE	q_p:	- - -
20. PILE YIELD STRENGTH ASTM A572	f_y:	- - -
21. PILE SIZE		- - -
22. EST. PILE LENGTH	L_p:	
23. PILE RESISTANCE FACTOR	ϕ:	- - -
24. LATERAL PILE DEFLECTION	Δ:	- - -
25. BASIC WIND SPEED	V_{3s}:	- - -
26. MINIMUM GROUND SNOW LOAD	p_g:	- - -
27. SEISMIC DATA PGA: - - -	S_s:	- - -
	S_1:	- - -

* SEE GEOTECHNICAL REPORT

TRAFFIC DATA

YEAR	ADT	DHV	% D	% T	ADTT
2013	2400	270	52	9.7	250
2023	2500	280	52	11.7	330

10 year ESAL for flexible pavement from 2013 to 2023 : 708,000
20 year ESAL for flexible pavement from 2013 to 2033 : 1,541,000
Design Speed : 30 mph

AS BUILT "REBAR" DETAIL

LEVEL I	LEVEL II	LEVEL III
TYPE:	TYPE:	TYPE:
GRADE:	GRADE:	GRADE:

PROJECT NAME: IRASBURG
PROJECT NUMBER: STP CULV (30)

FILE NAME: z_Irasburg_br7_pl.xls
PROJECT LEADER: M. CHENETTE
DESIGNED BY: A. LACHANCE
PRELIMINARY INFORMATION SHEET BR7

PLOT DATE: 10/20/2014
DRAWN BY: L. BUXTON
CHECKED BY: J. HUNGERFORD
SHEET 3 OF 55

621.20 - STEEL BEAM GUARDRAIL, GALVANIZED
STA. 33+11.03, LT. TO STA. 34+50.00, LT.
STA. 34+41.44, RT. TO STA. 34+50.00, RT.
STA. 35+50.00, LT. TO STA. 36+49.20, LT.
STA. 35+50.00, RT. TO STA. 36+61.45, RT.

621.21 - HD STEEL BEAM GUARDRAIL, GALVANIZED
STA. 34+50.0, LT. TO STA. 34+87.5, LT.
STA. 34+50.0, RT. TO STA. 34+87.5, RT.
STA. 35+12.5, LT. TO STA. 35+50.0, LT.
STA. 35+12.5, RT. TO STA. 35+50.0, RT.

621.216 - HD STEEL BEAM GUARDRAIL, GALVANIZED/NESTED
STA. 34+87.5, LT. TO STA. 35+12.5, LT.
STA. 34+87.5, RT. TO STA. 35+12.5, RT.

621.60 - ANCHOR FOR STEEL BEAM RAIL
STA. 33+11.03, LT.
STA. 34+41.44, RT.
STA. 36+49.20, LT.
STA. 36+61.45, RT.

621.80 - REMOVAL AND DISPOSAL OF GUARDRAIL
STA. 33+12.71, LT. TO STA. 36+05.57, LT.
STA. 34+48.75, RT. TO STA. 35+86.30, RT.

675.20 - TRAFFIC SIGNS, TYPE A
675.341 SQUARE TUBE SIGN POST AND ANCHOR
STA. 34+81, RT.
STA. 35+18 LT.

646.400- DURABLE 4 INCH WHITE LINE
STA. 33+55.00, RT. TO STA. 36+47.00, RT.
STA. 33+55.00, LT. TO STA. 36+47.00, LT.

646.410- DURABLE 4 INCH YELLOW LINE
STA. 33+55.00, CL. TO STA. 36+47.00, CL. (DYEL)

675.50 - REMOVING SIGNS
STA. 33+22, LT.
STA. 35+70, LT.

675.60 - ERECTING SALVAGED SIGNS
STA. 33+22, LT.
STA. 35+70, LT.

CURVE DATA
DELTA = 14°50' 31.6"
D = 5°12' 31.4"
R = 1100.00'
T = 143.28'
L = 284.95'
E = 9.29'

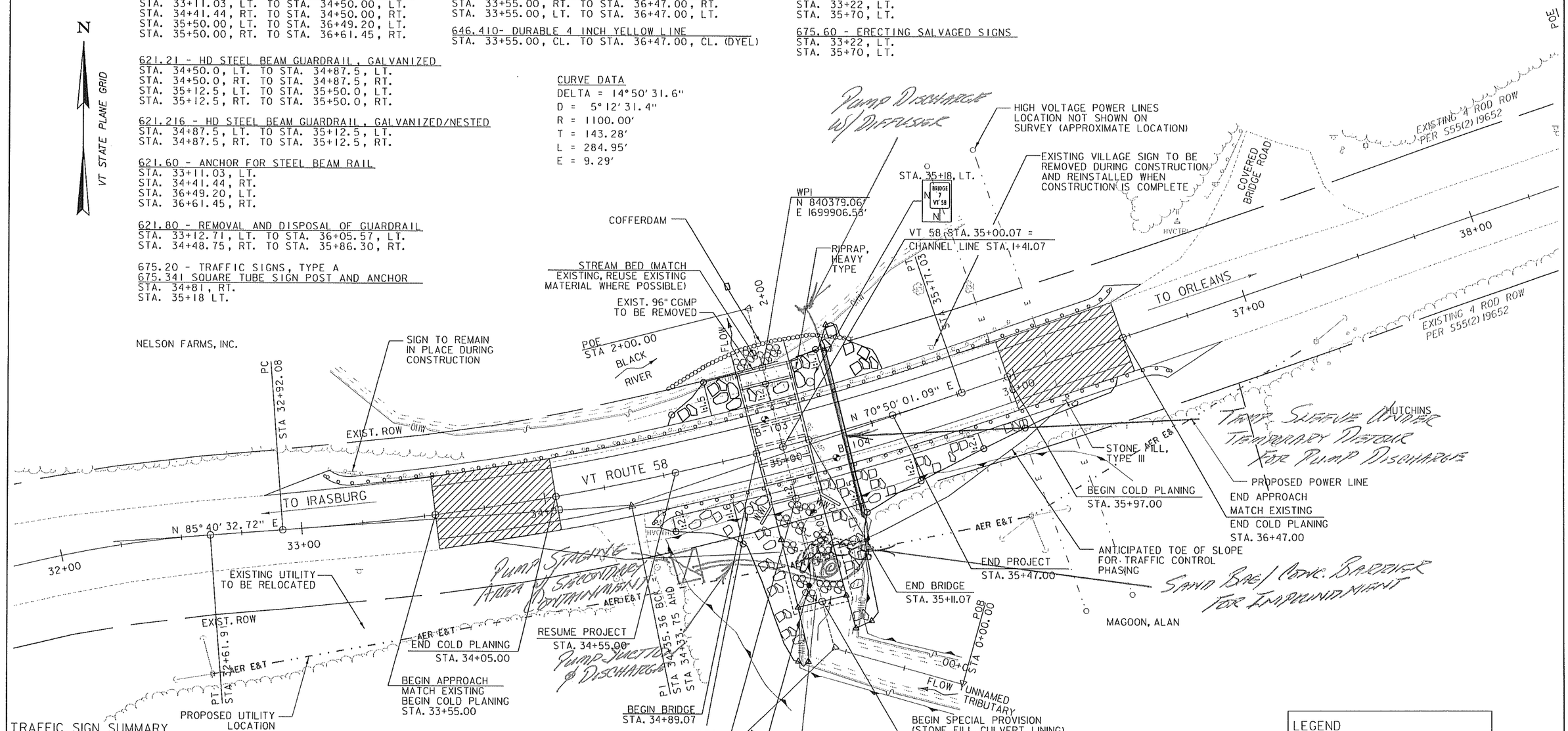

PLAN
SCALE: 1" = 20'-0"
0 20 40

TRAFFIC SIGN SUMMARY

STATION	SIGN LEGEND	SIGN DIMENSIONS EA	WIDTH (in)	HEIGHT (in)	NEW SIGNS "A"	NEW SIGNS "B"	NO. OF POSTS	NEW SIGN POSTS SQUARE STEEL (in) 1.75 (lb/ft 1.88)	2.0 (2.42)	2.5 (3.35)	ANCHOR	SLEEVE	REMARKS	STD. SHEET NUMBER
33+81, RT	BRIDGE 7 VT 58	1	6	8	0.33		1	X			X		VR-701	T-42
35+18, LT	BRIDGE 7 VT 58	1	6	8	0.33		1	X			X		VR-701	T-42
			TOTALS		SF 0.66	SF		FT 30						

FINAL POST LENGTHS ARE TO BE DETERMINED IN THE FIELD. POST SIZES ARE COMPUTED BASED ON INFORMATION FURNISHED ON THE STANDARD SHEETS AND THE VTRANS "SIGN POST DESIGN GUIDELINE."

LEGEND
- RIPRAP, HEAVY TYPE
- STONE FILL, TYPE III
- SPECIAL PROVISION (STONE FILL, CULVERT LINING)

NOTES:
1. GRADE IN ACCORDANCE WITH TYPICAL ROADWAY SECTION AND ROADWAY CROSS SECTIONS UNLESS NOTED OTHERWISE.

Stantec

PROJECT NAME: IRASBURG
PROJECT NUMBER: STP CULV(30)

FILE NAME: zllc266bdr_br7.dgn
PROJECT LEADER: M. CHENETTE
DESIGNED BY: J. HUNGERFORD
PLAN LAYOUT SHEET - BR7
PLOT DATE: 10/21/2014
DRAWN BY: L. BUXTON
CHECKED BY: M. CHENETTE
SHEET 35 OF 55

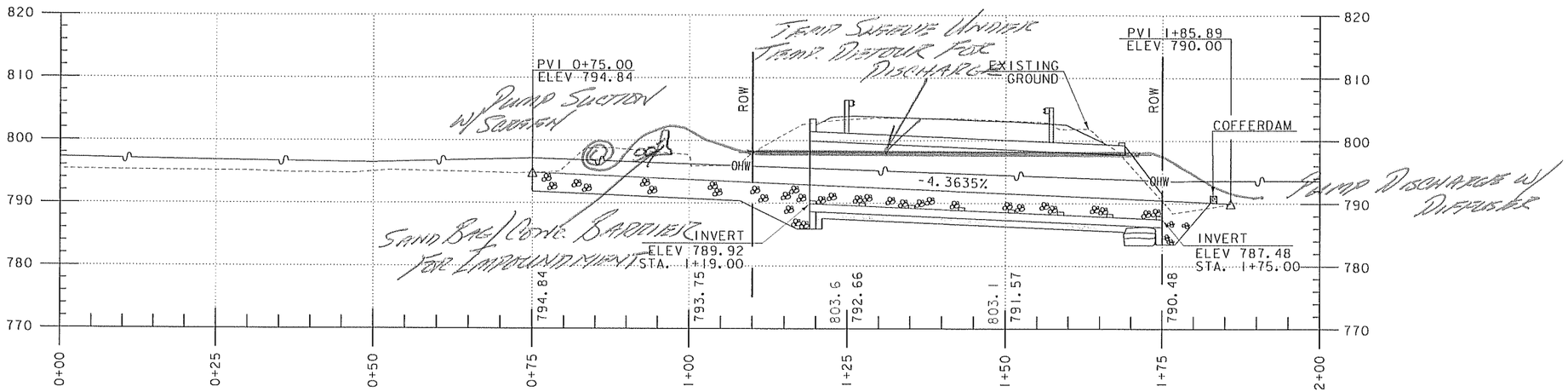

STREAM PROFILE

0 10 20
SCALE

NOTE:
ELEVATIONS SHOWN TO THE NEAREST TENTH ARE EXISTING GROUND ALONG PROPOSED CENTERLINE.

ELEVATIONS SHOW TO THE NEAREST HUNDREDTH ARE FINISHED GRADE ALONG PROPOSED CENTERLINE.

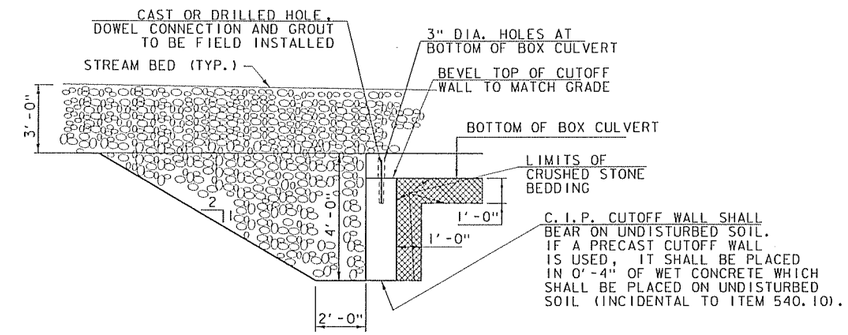

INLET CUTOFF WALL DETAIL

NOT TO SCALE

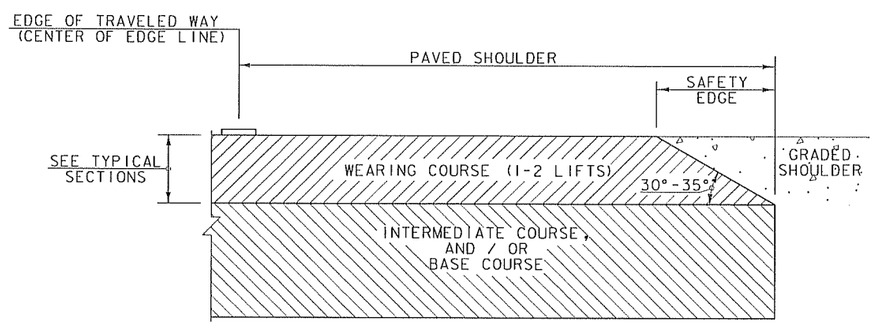

SAFETY EDGE DETAIL

NOT TO SCALE

NOTES:

1. THE EDGE OF PAVEMENT SHALL BE FORMED IN SUCH A WAY THAT THE BITUMINOUS CONCRETE PAVEMENT IS EXTRUDED OR COMPRESSED TO FORM THE 30 TO 35 DEGREE ANGLE. DEVICES THAT SIMPLY STRIKE-OFF THE MIX WITHOUT PROVIDING ANY COMPACTIVE EFFORT WILL NOT BE ALLOWED.

2. THE PAVED SHOULDER EXTENDS FROM THE EDGE OF TRAVELED WAY TO THE EDGE OF THE WEARING COURSE, INCLUDING THE "SAFETY EDGE".

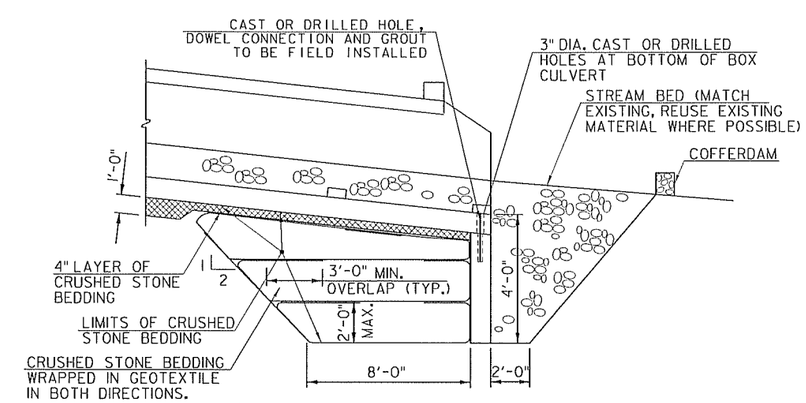

OUTLET CUTOFF WALL DETAIL

NOT TO SCALE

Stantec

PROJECT NAME: IRASBURG	
PROJECT NUMBER: STP CULV(30)	
FILE NAME: zllc266strm_pro.dgn	PLOT DATE: 10/21/2014
PROJECT LEADER: M. CHENETTE	DRAWN BY: L. BUXTON
DESIGNED BY: J. HUNGERFORD	CHECKED BY: M. CHENETTE
STREAM PROFILE - BR7	SHEET 37 OF 55

STATE OF VERMONT
AGENCY OF TRANSPORTATION

PRELIMINARY INFORMATION SHEET (BRIDGE)

Version 11.06.16

LRFD

INDEX OF SHEETS

PLAN SHEETS

INDEX OF SHEETS

PAGE NO.	SHEET TITLE
1	TITLE SHEET
2	PRELIMINARY INFORMATION SHEET 1- BR6
3	PRELIMINARY INFORMATION SHEET 1 - BR7
4	PROJECT NOTES
5-10	QUANTITY SHEETS - QS1 - QS6
11	CONVENTIONAL SYMBOLOGY LEGEND
12	TYPICAL SECTIONS - BR6
13	SURVEY CONTROL AND TIES - BR6
14	PLAN LAYOUT SHEET - BR6
15	ROADWAY PROFILE - BR6
16	STREAM PROFILE - BR6
17	STRUCTURAL PLAN AND DETAILS - BR6
18	TRAFFIC CONTROL PLAN - BR6
19	BORING PLAN - BR6
20	BORING LOG 1 - BR6
21	ROADWAY CROSS SECTIONS - RXS1 - BR6
22	ROADWAY CROSS SECTIONS - RXS2 - BR6
23	ROADWAY CROSS SECTIONS - RXS3 - BR6
24	CHANNEL CROSS SECTIONS - CXS1 - BR6
25	CHANNEL CROSS SECTIONS - CXS2 - BR6
26	CHANNEL CROSS SECTIONS - CXS3 - BR6
27	EPSC NARRATIVE - ECN1 - BR6
28	EPSC CONSTRUCTION SITE PLAN -ECP1 - BR6
29	EROSION CONTROL DETAILS - ECD1 - BR6
30	EROSION CONTROL DETAILS - ECD2 - BR6
31	PROJECT IMPACTS PLAN 1 - BR6
32	PROJECT IMPACTS PLAN 2 - BR6
33	TYPICAL SECTIONS - BR7
34	SURVEY CONTROL AND TIES - BR7
35	PLAN LAYOUT SHEET - BR7
36	ROADWAY PROFILE - BR7
37	STREAM PROFILE - BR7
38	STRUCTURAL PLAN AND DETAILS - BR7
39	TRAFFIC CONTROL PLAN - BR7
40	BORING PLAN - BR-7
41	BORING LOG 1 - BR7
42	ROADWAY CROSS SECTIONS - RXS1 - BR7
43	ROADWAY CROSS SECTIONS - RXS2 - BR7
44	ROADWAY CROSS SECTIONS - RXS3 - BR7
45	CHANNEL CROSS SECTIONS - CSX1 - BR7
46	CHANNEL CROSS SECTIONS - CXS2 - BR7
47	CHANNEL CROSS SECTIONS - CSX3 - BR7
48	EPSC NARRATIVE - ECN1 - BR7
49	EPSC CONSTRUCTION SITE PLAN - ECP1 - BR7
50	EROSION CONTROL DETAILS - ECD1 - BR7
51	EROSION CONTROL DETAILS - ECD2 - BR7
52	PROJECT IMPACTS PLAN 1 - BR7
53	PROJECT IMPACTS PLAN 2 - BR7
54	ROW DETAIL SHEET #1
55	ROW LAYOUT - BR7

STRUCTURE DETAIL SHEETS

SD-366.00	LONGSPAN STEEL BEAM GUARDRAIL, GALVANIZED	01/03/14

STANDARDS LIST

VAOT STANDARD SHEETS

E-121	STANDARD SIGN PLACEMENT - CONVENTIONAL ROAD	08/08/95
E-123	GUIDE SIGN PLACEMENT - MISCELLANEOUS DETAILS	03/16/04
E-171A	TRAFFIC CONTROL SIGNALS GENERAL NOTES & DETAILS	08/09/95
E-172	VEHICLE LOOP DETAILS	08/09/95
E-191	PAVEMENT MARKING DETAILS	02/01/99
E-192	PAVEMENT MARKING DETAILS	10/12/00
E-193	PAVEMENT MARKING DETAILS	08/18/95
G-1	STEEL BEAM GUARDRAIL DETAIL (POST, DELINEATOR, TYPICALS)	02/10/14
G-19	GENERIC PLANS FOR GUARDRAIL END TERMINALS	11/15/02
G-1D	STEEL BEAM GUARDRAIL DETAILS (END TERMINAL, ANCHOR, MEDIAN)	02/10/14
T-1	TRAFFIC CONTROL GENERAL NOTES	08/06/12
T-10	CONVENTIONAL ROADS CONSTRUCTION APPROACH SIGNING	08/06/12
T-17	TRAFFIC CONTROL MISCELLANEOUS DETAILS	08/06/12
T-28	CONSTRUCTION SIGN DETAILS	08/06/12
T-29	CONSTRUCTION SIGN DETAILS	08/06/12
T-30	CONSTRUCTION SIGN DETAILS	08/06/12
T-31	CONSTRUCTION SIGN DETAILS	08/06/12
T-35	CONSTRUCTION ZONE LONGITUDINAL DROP-OFFS	08/06/12
T-36	CONSTRUCTION ZONE LONGITUDINAL DROP-OFFS FOR PAVING	08/06/12
T-42	BRIDGE NUMBER PLAQUE	04/09/14
T-45	SQUARE TUBE SIGN POST AND ANCHOR	01/02/13

AS BUILT "REBAR" DETAIL

LEVEL I	LEVEL II	LEVEL III
TYPE:	TYPE:	TYPE:
GRADE:	GRADE:	GRADE:

TRAFFIC DATA

YEAR	ADT	DHV	% D	% T	ADTT
2013	1700	190	51	8.4	190
2023	1800	200	51	10.6	250

10 year ESAL for flexible pavement from 2013 to 2023 : 715,000
20 year ESAL for flexible pavement from 2013 to 2033 : 1,781,000
Design Speed : 50 mph

FINAL HYDRAULIC REPORT – BRIDGE NO. 6

HYDROLOGIC DATA

Date: 7 January 2014

DRAINAGE AREA : 3.55 sq. mi.
CHARACTER OF TERRAIN : Hilly to mountainous; 45% woods, 55% meadow, small ponds
STREAM CHARACTERISTICS : Perennial, sinuous, moderate slope
NATURE OF STREAMBED : Silty sand; scour susceptible

PEAK FLOW DATA

Q 2.33 =	160 cfs	Q 50 =	650 cfs
Q 10 =	380 cfs	Q 100 =	790 cfs
Q 25 =	520 cfs	Q 500 =	1110 cfs

DATE OF FLOOD OF RECORD : Unknown
ESTIMATED DISCHARGE: Unknown
WATER SURFACE ELEV.: Unknown
NATURAL STREAM VELOCITY : @ Q50 = 13.2 fps
ICE CONDITIONS : Light
DEBRIS: Light
DOES THE STREAM REACH MAXIMUM HIGHWATER ELEV. RAPIDLY? No
IS ORDINARY RISE RAPID? No
IS STAGE AFFECTED BY UPSTREAM OR DOWNSTREAM CONDITIONS? No
IF YES, DESCRIBE:

WATERSHED STORAGE: <1%
HEADWATERS:
UNIFORM: X
IMMEDIATELY ABOVE SITE:

EXISTING STRUCTURE INFORMATION

STRUCTURE TYPE: 8' diameter multi-plate pipe (CGMP)
YEAR BUILT: 1965
CLEAR SPAN(NORMAL TO STREAM): 9.0'
VERTICAL CLEARANCE ABOVE STREAMBED: 9.0'
WATERWAY OF FULL OPENING: 63.6 sq. ft.
DISPOSITION OF STRUCTURE: Remove and replace
TYPE OF MATERIAL UNDER SUBSTRUCTURE: See borings

WATER SURFACE ELEVATIONS AT:

Q2.33 =	842.1'	VELOCITY =	8.5 fps
Q10 =	845.2'	"	11.1 fps
Q25 =	847.0'	"	12.4 fps
Q50 =	848.7'	"	13.6 fps
Q100 =	851.2'	"	15.0 fps

LONG TERM STREAMBED CHANGES: None noted

IS THE ROADWAY OVERTOPPED BELOW Q100: No
FREQUENCY: N/A
RELIEF ELEVATION: 855.1'
DISCHARGE OVER ROAD @Q100: None

UPSTREAM STRUCTURE

TOWN: Irasburg
DISTANCE: 2336'
HIGHWAY # : TH26
STRUCTURE #:
CLEAR SPAN:
CLEAR HEIGHT:
YEAR BUILT:
FULL WATERWAY:
STRUCTURE TYPE:

DOWNSTREAM STRUCTURE

TOWN: Irasburg
DISTANCE: 360'
HIGHWAY # :
STRUCTURE #:
CLEAR SPAN:
CLEAR HEIGHT:
YEAR BUILT:
FULL WATERWAY:
STRUCTURE TYPE: Confluence w/ Stony Hill Brook

LRFR LOAD RATING FACTORS

LOADING LEVELS	TRUCK						
	H-20	HL-93	3S2	6 AXLE	3A. STR.	4A. STR.	5A. SEMI
TONNAGE	20	36	36	66	30	34.5	38
INVENTORY							
POSTING							
OPERATING							
COMMENTS:							

* SEE GEOTECHNICAL REPORT

PROPOSED STRUCTURE

STRUCTURE TYPE: Precast Concrete Box Culvert

CLEAR SPAN(NORMAL TO STREAM): 20.0'
VERTICAL CLEARANCE ABOVE STREAMBED: 6.0'
WATERWAY OF FULL OPENING: 120 sq. ft.

WATER SURFACE ELEVATIONS AT:

Q2.33 =	839.1'	VELOCITY=	4.8 fps
Q10 =	840.8'	"	6.8 fps
Q25 =	841.7'	"	7.8 fps
Q50 =	842.4'	"	8.6 fps
Q100 =	843.2'	"	9.5 fps

IS THE ROADWAY OVERTOPPED BELOW Q100: No
FREQUENCY: N/A
RELIEF ELEVATION: 855.1'
DISCHARGE OVER ROAD @Q100: None

AVERAGE LOW ELEVATION OF SUPERSTRUCTURE: 842.6'
VERTICAL CLEARANCE: @ Q50 = 0.2'

SCOUR: Replacement structure is a box culvert so scour is not a concern.

REQUIRED CHANNEL PROTECTION: Stone Fill, Type III

PERMIT INFORMATION

AVERAGE DAILY FLOW:	7.5 cfs	DEPTH OR ELEVATION:
ORDINARY LOW WATER:	4.0 cfs	Depth = 0.5'
ORDINARY HIGH WATER:	110 cfs	Depth = 3.0'

TEMPORARY BRIDGE REQUIREMENTS

STRUCTURE TYPE: Temporary Bridge not Required
CLEAR SPAN (NORMAL TO STREAM): N/A
VERTICAL CLEARANCE ABOVE STREAMBED: N/A
WATERWAY AREA OF FULL OPENING: N/A

ADDITIONAL INFORMATION

TRAFFIC MAINTENANCE NOTES

1. MAINTAIN ONE-WAY TRAFFIC UNDER PHASED CONSTRUCTION.
2. TRAFFIC SIGNALS ARE NECESSARY.
3. SIDEWALKS ARE NOT NECESSARY

DESIGN VALUES

1. DESIGN LIVE LOAD		HL-93
2. FUTURE PAVEMENT	d_p:	3.0 INCH
3. DESIGN SPAN	L:	20.0 FT
4. MIN. MID-SPAN POS. CAMBER @ RELEASE (PRESTRESSED UNITS)	Δ:	- - -
5. PRESTRESSING STRAND (0.60 INCH DIAMETER - LOW RELAX)	f_y:	
6. PRESTRESSED CONCRETE STRENGTH	f'_c:	
7. PRESTRESSED CONCRETE RELEASE STRENGTH	f'_{ci}:	
8. CONCRETE, HIGH PERFORMANCE CLASS AA	f'_c:	
9. CONCRETE, HIGH PERFORMANCE CLASS A	f'_c:	- - -
10. CONCRETE, HIGH PERFORMANCE CLASS B	f'_c:	3.5 KSI
11. CONCRETE, CLASS C	f'_c:	- - -
12. REINFORCING STEEL	f_y:	60 KSI
13. STRUCTURAL STEEL AASHTO M270	f_y:	- - -
14. SOIL UNIT WEIGHT	γ:	0.140 KCF
15. NOMINAL BEARING RESISTANCE OF SOIL	q_n:	* 4.3 KSF
16. SOIL BEARING RESISTANCE FACTOR (REFER TO AASHTO LRFD)	ϕ:	0.45
17. NOMINAL BEARING RESISTANCE OF ROCK	q_n:	- - -
18. ROCK BEARING RESISTANCE FACTOR (REFER TO AASHTO LRFD)	ϕ:	- - -
19. NOMINAL AXIAL PILE RESISTANCE	q_p:	- - -
20. PILE YIELD STRENGTH ASTM A572	f_y:	- - -
21. PILE SIZE		- - -
22. EST. PILE LENGTH	L_p:	
23. PILE RESISTANCE FACTOR	ϕ:	- - -
24. LATERAL PILE DEFLECTION	Δ:	- - -
25. BASIC WIND SPEED	V_{3s}:	- - -
26. MINIMUM GROUND SNOW LOAD	p_g:	- - -
27. SEISMIC DATA PGA: - - -	S_s:	- - -
	S_1:	- - -

PROJECT NAME: **IRASBURG**
PROJECT NUMBER: **STP CULV(30)**

FILE NAME: z_irasburg_br6_pi.xls
PROJECT LEADER: M. CHENETTE
DESIGNED BY: A. LACHANCE
PRELIMINARY INFORMATION SHEET BR6

PLOT DATE: 10/20/2014
DRAWN BY: L. BUXTON
CHECKED BY: J. HUNGERFORD
SHEET 2 OF 55

621.205 - STEEL BEAM GUARDRAIL, GALVANIZED W/8 FEET POSTS
STA. 23+70.18, LT. TO 26+94.55, LT.
STA. 23.77.40, RT. TO 26+84.27, RT.

621.60 - ANCHOR FOR STEEL BEAM RAIL
STA. 23+70.18, LT.
STA. 23.77.40, RT.
STA. 26+84.27, RT.
STA. 26+94.55, LT.

621.80 - REMOVAL AND DISPOSAL OF GUARDRAIL
STA. 23+74.09, LT. TO 26+92.52, LT.
STA. 23+74.67, RT. TO 26+79.79, RT.

675.20 - TRAFFIC SIGNS, TYPE A
675.341 SQUARE TUBE SIGN POST AND ANCHOR
STA. 24+90, RT.
STA. 25+20 LT.

646.400- DURABLE 4 INCH WHITE LINE
STA. 23+47.0, RT. TO STA. 26+63.0, RT.
STA. 23+47.0, LT. TO STA. 26+63.0, LT.

646.410- DURABLE 4 INCH YELLOW LINE
STA. 23+47.0, CL. TO STA. 26+63.0, CL. (DYCL)

CURVE DATA
PC = 20+61.10
DELTA = 22°15'07.6"
D = 3°00'56.04"
R = 1900.00'
T = 373.66'
L = 737.91'
E = 36.39'

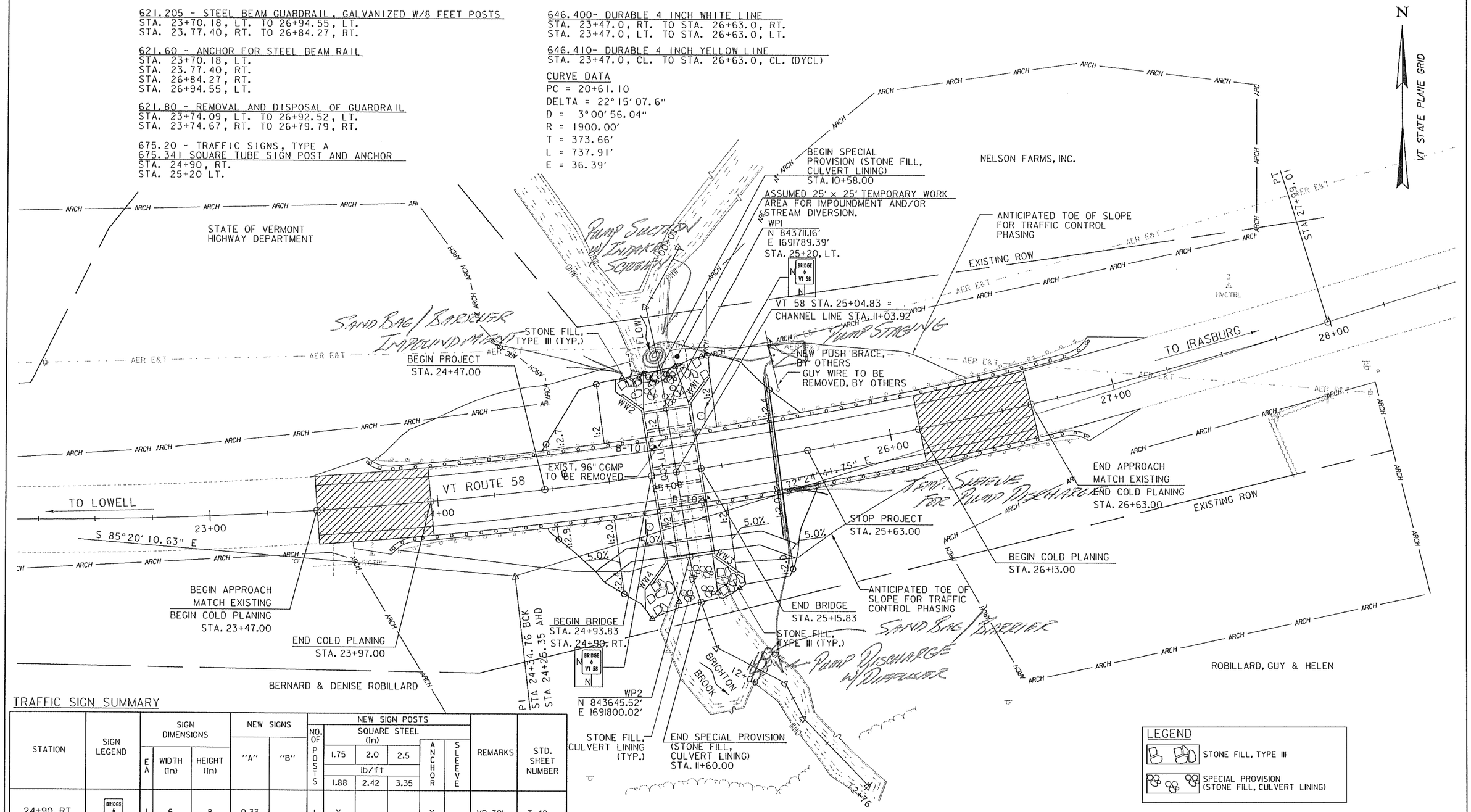

PLAN
SCALE: 1" = 20'-0"
0 20 40

TRAFFIC SIGN SUMMARY

STATION	SIGN LEGEND	SIGN DIMENSIONS EA	WIDTH (in)	HEIGHT (in)	NEW SIGNS "A"	NEW SIGNS "B"	NO. OF POSTS	NEW SIGN POSTS SQUARE STEEL (in) 1.75 lb/ft 1.88	2.0 lb/ft 2.42	2.5 lb/ft 3.35	ANCHOR	SLEEVE	REMARKS	STD. SHEET NUMBER
24+90, RT	BRIDGE 6 VT 58	1	6	8	0.33		1	X			X		VR-701	T-42
25+20, LT	BRIDGE 6 VT 58	1	6	8	0.33		1	X			X		VR-701	T-42
			TOTALS		SF 0.66	SF		FT 30						

FINAL POST LENGTHS ARE TO BE DETERMINED IN THE FIELD. POST SIZES ARE COMPUTED BASED ON INFORMATION FURNISHED ON THE STANDARD SHEETS AND THE VTRANS "SIGN POST DESIGN GUIDELINE."

LEGEND
STONE FILL, TYPE III
SPECIAL PROVISION (STONE FILL, CULVERT LINING)

NOTES:
1. GRADE IN ACCORDANCE WITH TYPICAL ROADWAY SECTION AND ROADWAY CROSS SECTIONS UNLESS NOTED OTHERWISE.

Stantec

PROJECT NAME: IRASBURG
PROJECT NUMBER: STP CULV(30)

FILE NAME: zllc266bdr_br6.dgn
PROJECT LEADER: M. CHENETTE
DESIGNED BY: J. HUNGERFORD
PLAN LAYOUT SHEET - BR6
PLOT DATE: 10/21/2014
DRAWN BY: L. BUXTON
CHECKED BY: M. CHENETTE
SHEET 14 OF 55

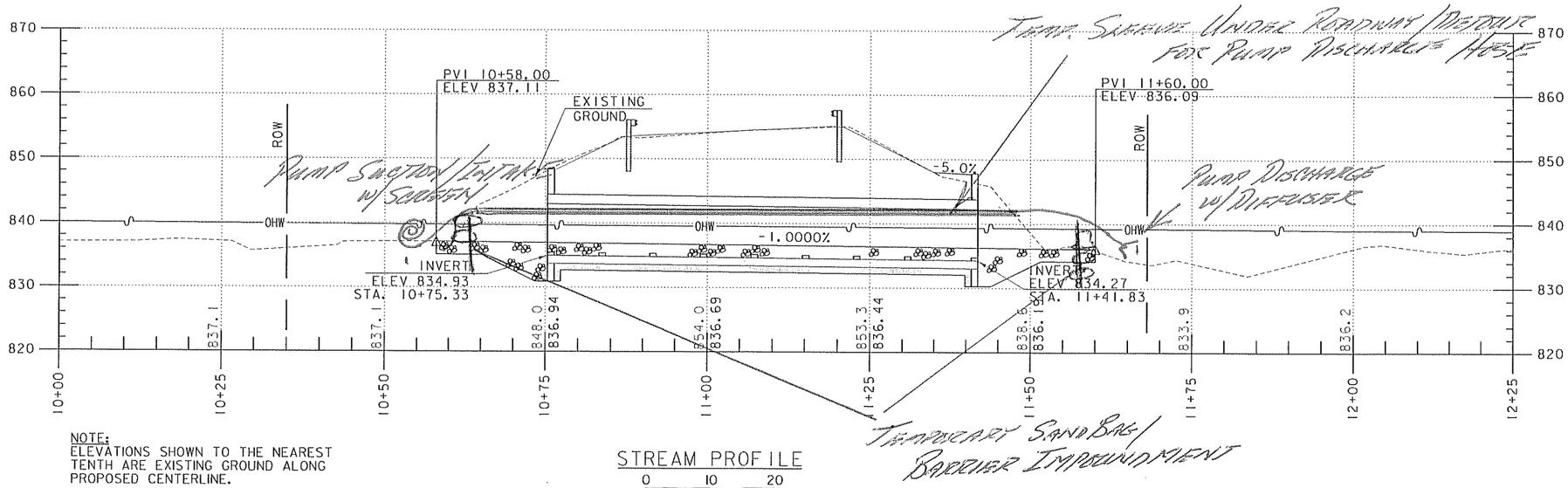

NOTE:
ELEVATIONS SHOWN TO THE NEAREST TENTH ARE EXISTING GROUND ALONG PROPOSED CENTERLINE.

ELEVATIONS SHOW TO THE NEAREST HUNDREDTH ARE FINISHED GRADE ALONG PROPOSED CENTERLINE.

STREAM PROFILE

0 10 20
SCALE

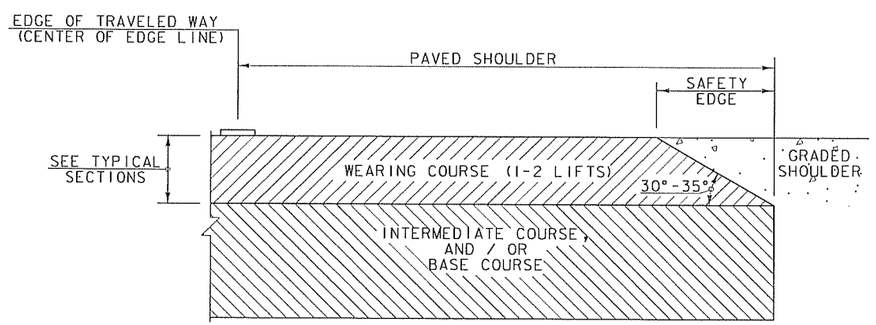

SAFETY EDGE DETAIL

NOT TO SCALE

NOTES:

1. THE EDGE OF PAVEMENT SHALL BE FORMED IN SUCH A WAY THAT THE BITUMINOUS CONCRETE PAVEMENT IS EXTRUDED OR COMPRESSED TO FORM THE 30 TO 35 DEGREE ANGLE. DEVICES THAT SIMPLY STRIKE-OFF THE MIX WITHOUT PROVIDING ANY COMPACTIVE EFFORT WILL NOT BE ALLOWED.

2. THE PAVED SHOULDER EXTENDS FROM THE EDGE OF TRAVELED WAY TO THE EDGE OF THE WEARING COURSE, INCLUDING THE "SAFETY EDGE".

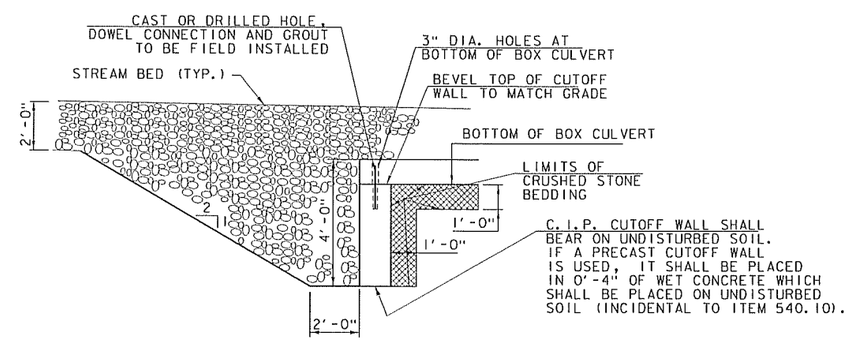

CUTOFF WALL DETAIL

NOT TO SCALE

Stantec

PROJECT NAME: IRASBURG	
PROJECT NUMBER: STP CULV(30)	
FILE NAME: zllc266strm_pro.dgn	PLOT DATE: 10/21/2014
PROJECT LEADER: M. CHENETTE	DRAWN BY: L. BUXTON
DESIGNED BY: J. HUNGERFORD	CHECKED BY: M. CHENETTE
STREAM PROFILE - BR6	SHEET 16 OF 55