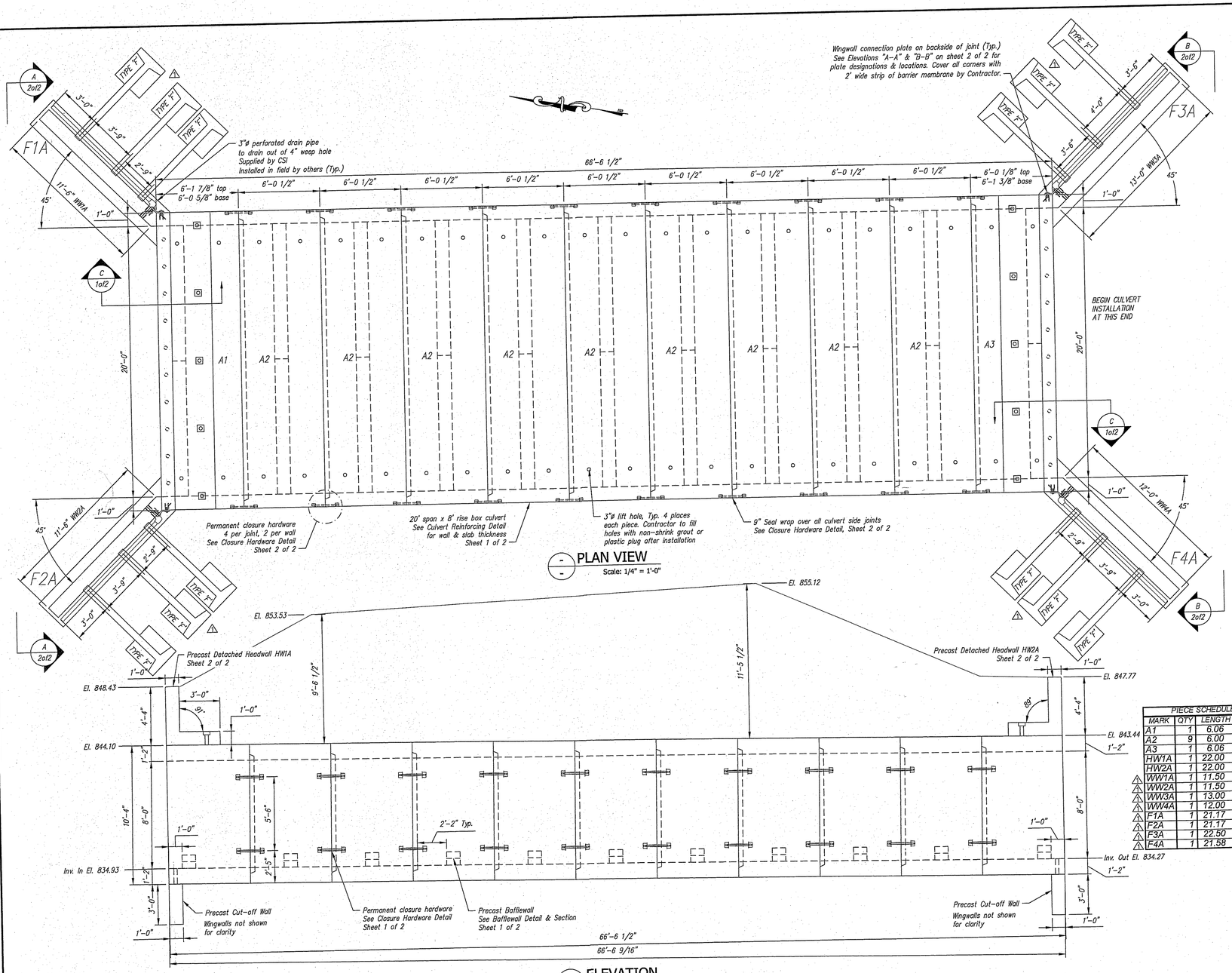

WINGWALL GENERAL NOTES:

1. Reference standard:
   AASHTO LRFD Specifications
2. Design Parameters:
   Soil Bearing: 4300 psf
   Earth Cover: 5' to 7.5'
   Concrete: Design strength f'c = 5000 psi
   Unit weight = 150 pcf
   Reinforcing: ASTM A615 (rebar), grade 60, Black
   Soil: Unit weight = 140 pcf
   Minimum lateral pressure coefficient .25
   Maximum lateral pressure coefficient .50
   Cover to reinforcing: 2" u.n.o.
3. The wingwalls have been designed for general site conditions. The project engineer shall be responsible for the structure's suitability to the existing site conditions and for the hydraulic evaluation, including scour and confirmation of soil conditions.
4. Prior to construction, contractor must verify all elevations shown through the engineer.

GENERAL NOTES:

1. Reference Standards:
   AASHTO "LRFD Bridge Design Specifications"
   ASTM C1577
2. Design Parameters:
   Live load: HL-93
   Earth Cover: 9' to 12'
   Concrete: Design strength f'c = 5000 psi
   Unit weight = 150 pcf
   Reinforcing: ASTM A615 (rebar) GR 60, Black
   Soil: Unit weight = 140 pcf
   Minimum lateral pressure coefficient .25
   Maximum lateral pressure coefficient .50
   Cover to reinforcing: 2" headwalls
   1 1/2" elsewhere u.n.o.
3. Dimensions include a joint gap. Actual culvert piece length is ½" shorter (i.e. A2 = 6'-0").
4. No dampproofing or waterproofing supplied by CSI.
5. DBS are Dowel Bar Splicers and DI are Dowel Ins. Both are supplied by CSI. DI's are to be installed and cut/bent in the field by others as required.
6. Headwalls are not designed for impact load.
7. Water repellant (Silxane Siloxane) by CSI on all exposed faces of culvert, headwalls, and wingwalls to 1' inside culvert ends.
8. Baffle wall details taken from Sheet 12 of 55 of the contract drawings.

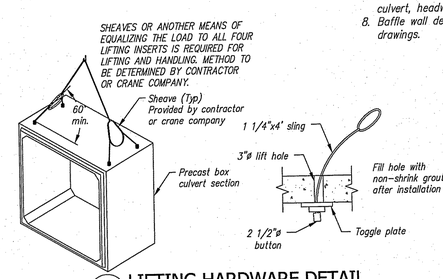

LIFTING HARDWARE DETAIL
Scale: N.T.S.

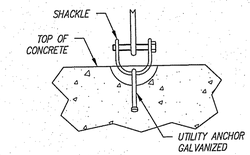

FOOTING LIFTING DETAIL
Scale: N.T.S.

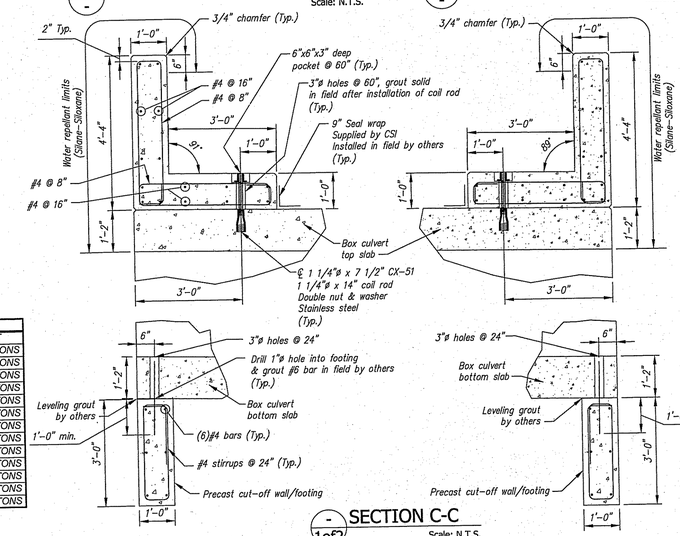

PIECE SCHEDULE (MX-FA5000SC30)					
MARK	QTY	LENGTH	YDS	WEIGHT	
A1	1	6.06 '	16.08	32.56	TONS
A2	9	6.00 '	15.70	31.79	TONS
A3	1	6.06 '	15.62	31.63	TONS
HW1A	1	22.00 '	5.98	12.11	TONS
HW2A	1	22.00 '	5.98	12.11	TONS
△ WW1A	1	11.50 '	7.09	14.36	TONS
△ WW2A	1	11.50 '	7.09	14.36	TONS
△ WW3A	1	13.00 '	7.90	16.00	TONS
△ WW4A	1	12.00 '	7.44	15.07	TONS
△ F1A	1	21.17 '	4.57	9.25	TONS
△ F2A	1	21.17 '	4.57	9.25	TONS
△ F3A	1	22.50 '	4.99	10.10	TONS
△ F4A	1	21.58 '	4.71	9.54	TONS

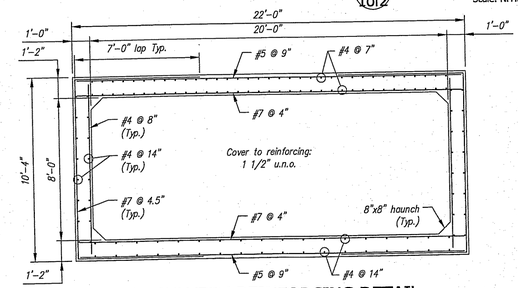

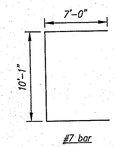

BENDING SCHEDULE
Scale: N.T.S.

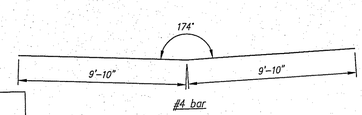

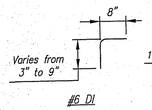

BAFFLE WALL BENDING SCHEDULE
Scale: N.T.S.

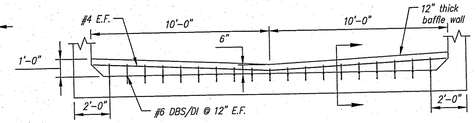

BAFFLE WALL DETAIL
Scale: N.T.S.

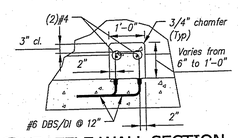

BAFFLE WALL SECTION
Scale: N.T.S.

Contractor is to verify that all information shown on drawings has been thoroughly checked, complies with the contract documents and is adequate to meet the field conditions. Some dimensions and details may differ slightly from contract drawings to accommodate the manufacturing or design process. Approval of this drawing indicates that any deviation from the contract documents has been reviewed and found to be acceptable. Production will not commence until receipt of signed, approved shop drawings.

This drawing contains information proprietary to CONCRETE SYSTEMS, INC. This drawing is disclosed with the understanding that it will be retained in confidence and its use limited solely to the purpose for which it is disclosed. It is understood that no reproduction of this drawing is authorized without permission from CONCRETE SYSTEMS, INC. and that it will be returned to CONCRETE SYSTEMS, INC. upon request.

STATE OF VERMONT
CHRISTOPHER M. WORK
NO. 77029
Structural
LICENSED
PROFESSIONAL ENGINEER
4/6/15
Stamp for structural design only

Rev.	Date	DESCRIPTION	By
5			
4			
3			
2			
1	01APR2015	CONSPAN WW ANCHORS WERE TYPE 'D', WWs WERE 10" THK, WW & FTG WEIGHTS UPDATED	RY

REVISIONS

This drawing is based upon information provided from the following documents and/or sources:

Engineer: STATE OF VT AOT PROGRAM DEVELOPMENT
Project No: STPCULV30
Drawings: VT/AOT PROPOSED INPROVEMENT BRIDGE PROJECT
SHEETS 1 THRU 24 & 32 OF 55
Specifications: ----

Other Sources: ----

CSI Concrete Systems Inc.
9 Commercial St., Hudson, NH,03051
Phone 603-889-4163
Fax 603-889-2417

STATE AGENCY
VTrans Making it Go! For You!

Drawn by R. YEAGER	Date 09MAR2015
Reviewed By	Date
Approved By	Date

J A MCDONALD, INC.
VT/AOT BRIDGE - STEEL CULVERT REPLACEMENT
BRIDGE #6, VT ROUTE 58, IRASBURG, VT

D — 20' SPAN x 8' RISE BOX CULVERT LAYOUT — REV 1
Drawing No. C22283-L01A
Quantity: 1 | Project No: STPCULV30 | SHEET 1A OF 2A

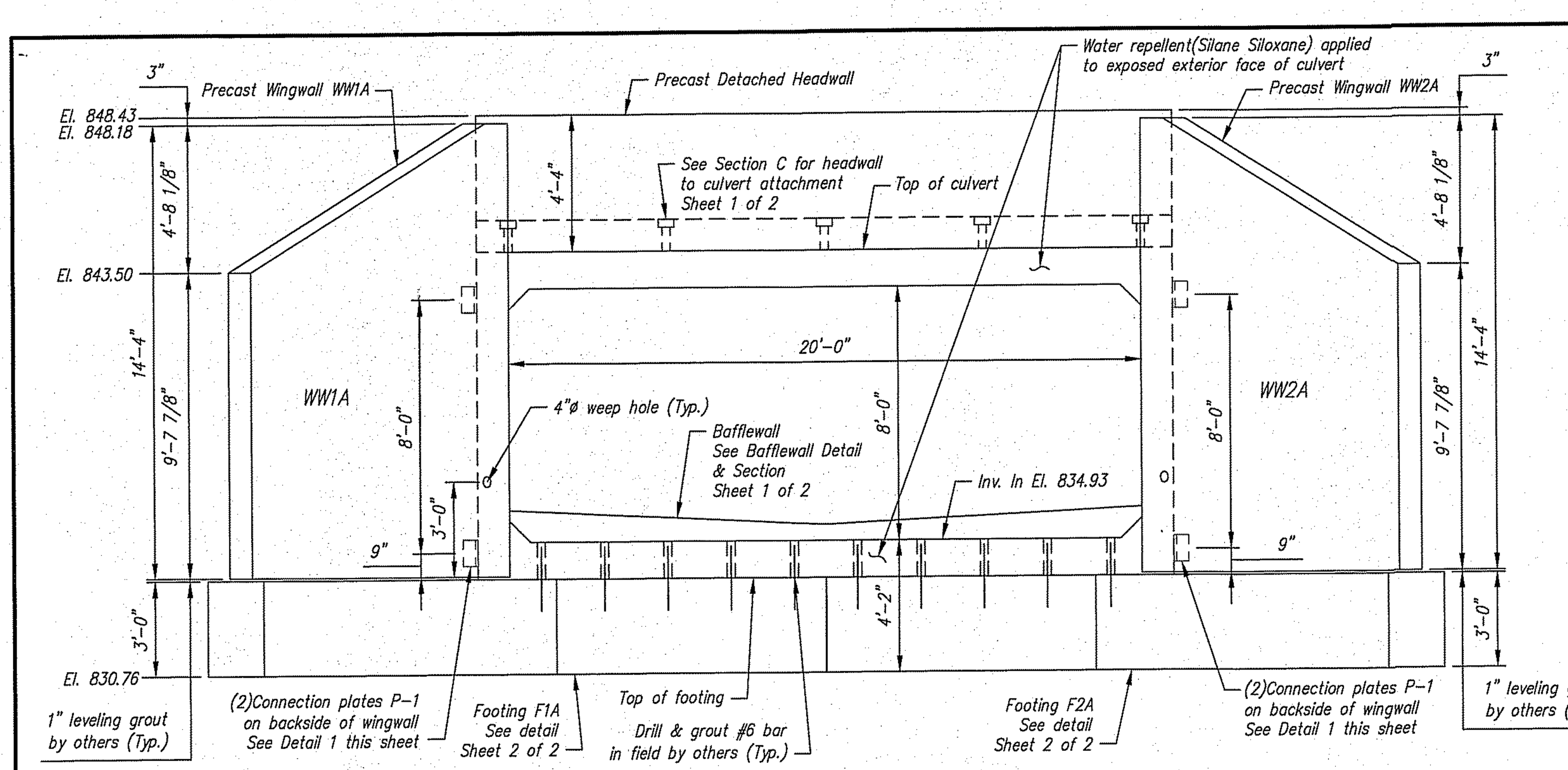

ELEVATION A-A

Scale: 1/4" = 1'-0"

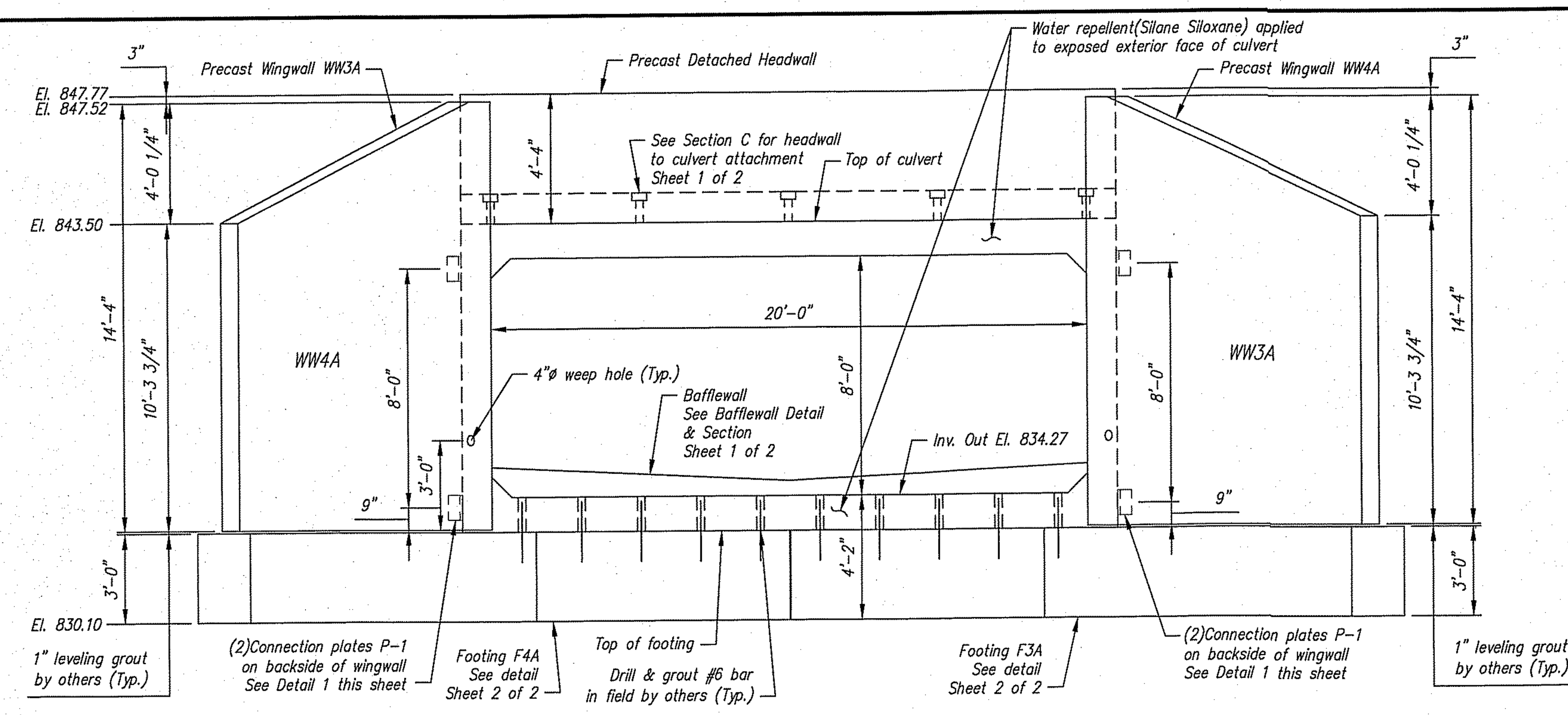

ELEVATION B-B

Scale: 1/4" = 1'-0"

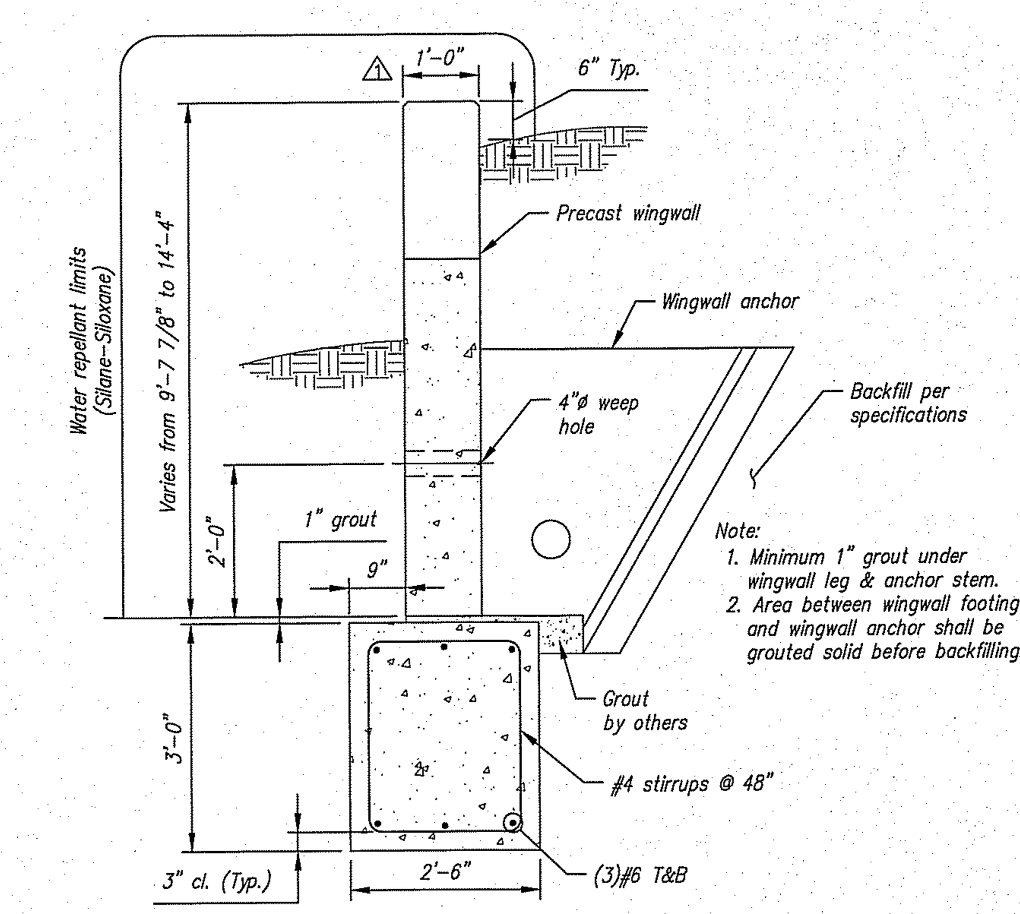

TYPICAL WINGWALL SECTION

Scale: N.T.S.

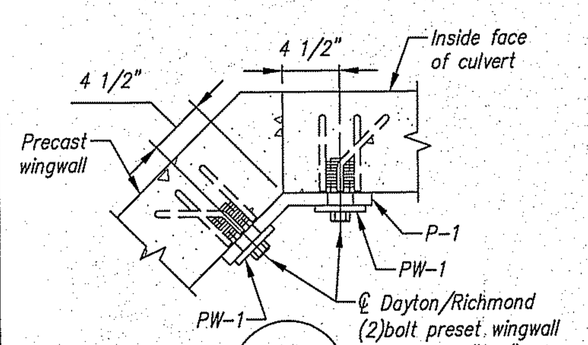

DETAIL 1 / 2of2

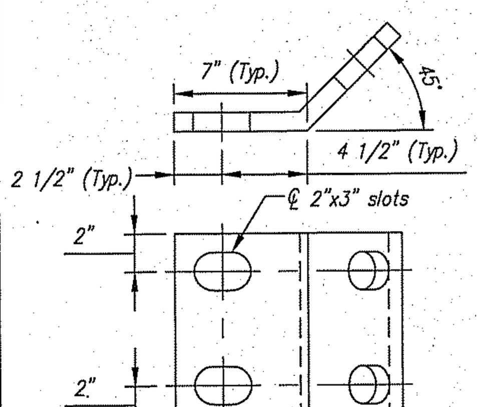

P-1

(℄ 1" x 10" x 14")
(Galvanized as per ASTM A153)
(Total required = 8)

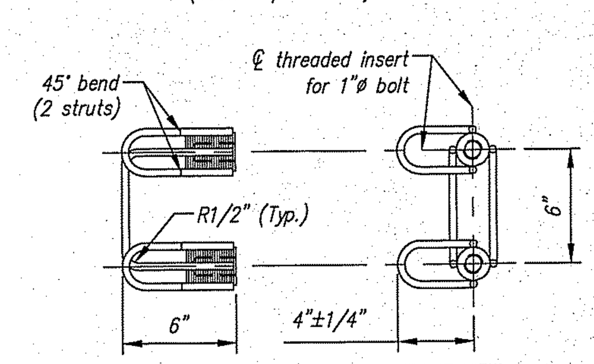

DAYTON/RICHMOND TWO BOLT PRESET ANCHOR

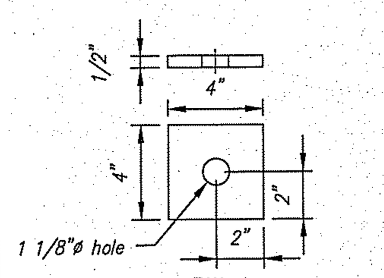

PW-1

(℄ washer, 1/2" x 4" x 4")
(Galvanized as per ASTM A153)
(Total required = 36)

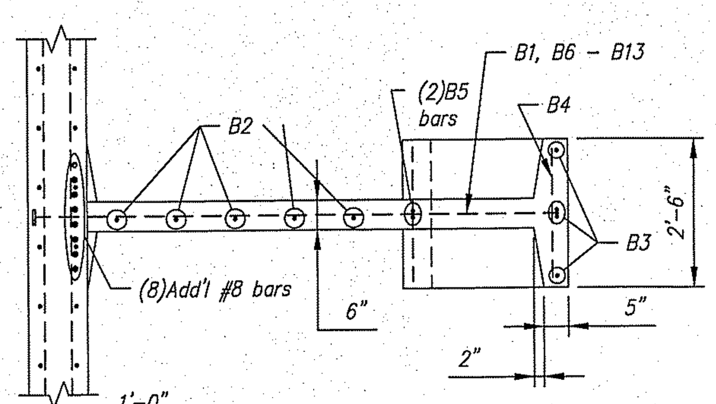

PLAN

Note: Additional reinforcing required at wingwall anchors and around edges of wingwall

#5 bar E.F. around perimeter of wingwall

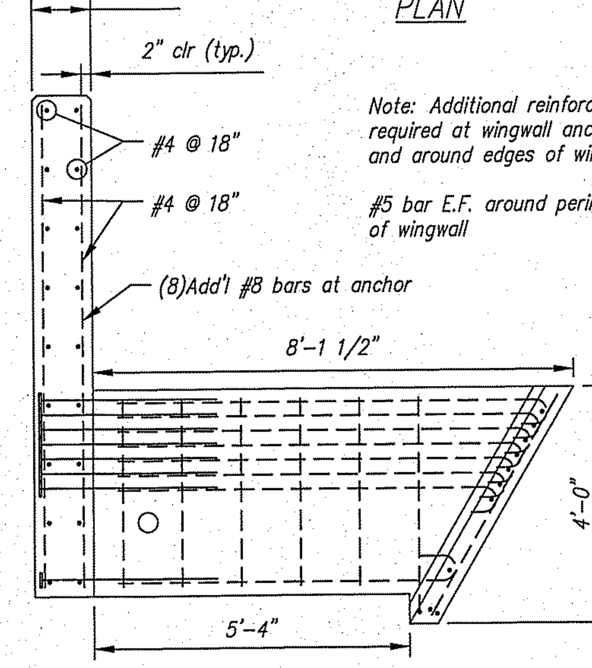

SECTION

BAR LIST					
MARK	QTY.	SIZE	a	TYPE	LENGTH
B1	8	#6	3'-0"	3	——
B2	4	#5	——	Str.	3'-2"
B3	4	#5	——	Str.	4'-3"
B4	11	#5	——	Str.	2'-2"
B5	2	#5	3'-8"	2	——
B6	1	#5	6'-2"	1	——
B7	1	#5	6'-9"	1	——
B8	1	#5	6'-11"	1	——
B9	1	#5	7'-1"	1	——
B10	1	#5	7'-3"	1	——
B11	1	#5	7'-5"	1	——
B12	1	#5	7'-6"	1	——
B13	1	#5	7'-8"	1	——

Note: "Str." denotes straight bar.
Standard clearance = 2"

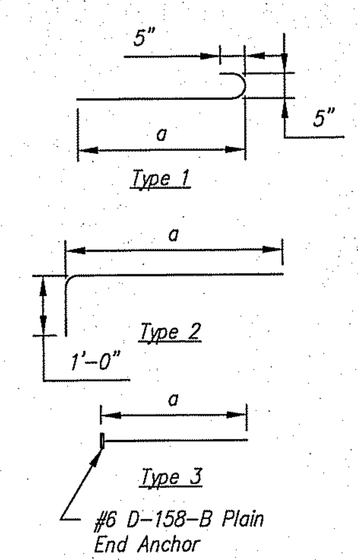

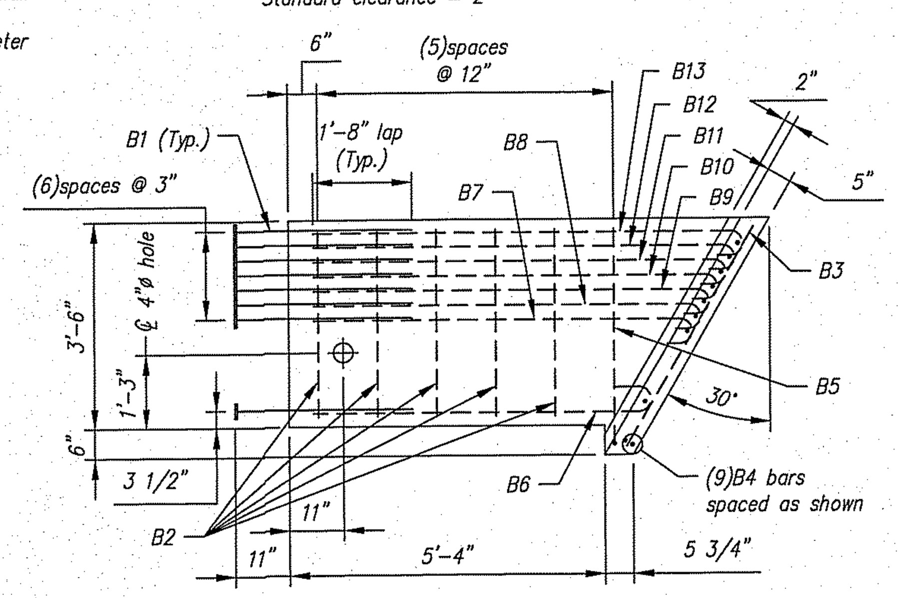

PRECAST ANCHOR
TYPE F ⚠1

BACKFILL DESCRIPTION							
Group Classification	A-1: A-1-a	A-1: A-1-b	A-3	A-2: A-2-4	A-2: A-2-5	A-2: A-2-6	A-2: A-2-7
Sieve Analysis, Percent Passing							
No. 10	50 max.						
No. 40	30 max.	50 max.	51 min.				
No. 200	15 max.	25 max.	10 max.	35 max.	35 max.	35 max.	35 max.
Characteristics of Fraction Passing No. 40							
Liquid Limit				40 max.	41 min.	40 max.	41 min.
Plasticity Index	6 max.		N.P.	10 max.	10 max.	11 min.	11 min.
Usual Types of Significant Constituent Materials	Stone Fragments, Gravel & Sand		Fine Sand	Silty or Clayey Gravel and Sand			
General Rating as Subgrade	Excellent to Good						

NOTES
1. BACKFILLING OPERATIONS WITHIN THE C.B.Z. SHALL BE PERFORMED IN LIFTS OF 8" OR LESS (LOOSE DEPTH).
2. MAXIMUM DRY DENSITY SHALL BE DETERMINED BY AASHTO T-99 OR OTHER APPROVED METHODS.
3. BACKFILL SHALL BE COMPACTED IN LAYERS UNTIL THE DENSITY IS NOT LESS THAN 95% OF THE MAXIMUM DRY DENSITY.

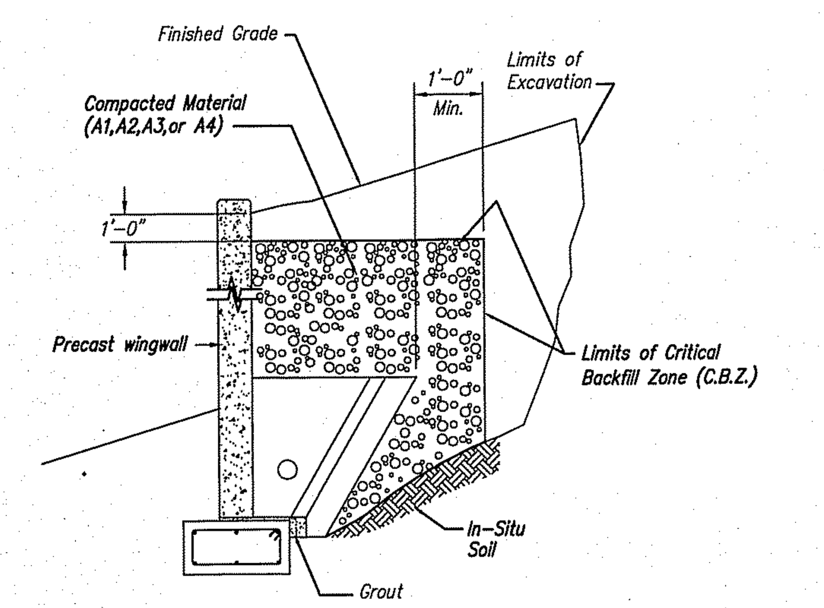

WINGWALL BACKFILL REQUIREMENTS

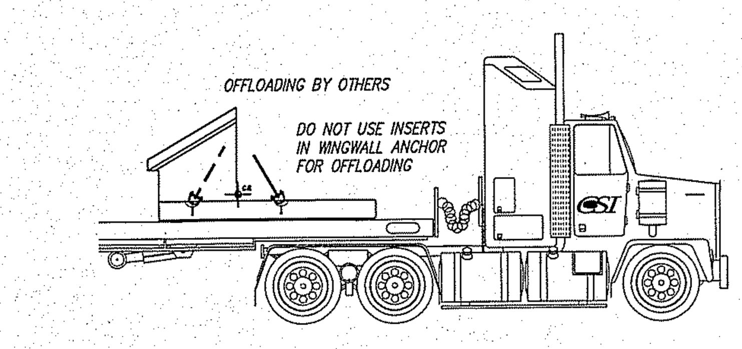

WINGWALL OFFLOADING & TRIPPING DETAIL

Scale: N.T.S.

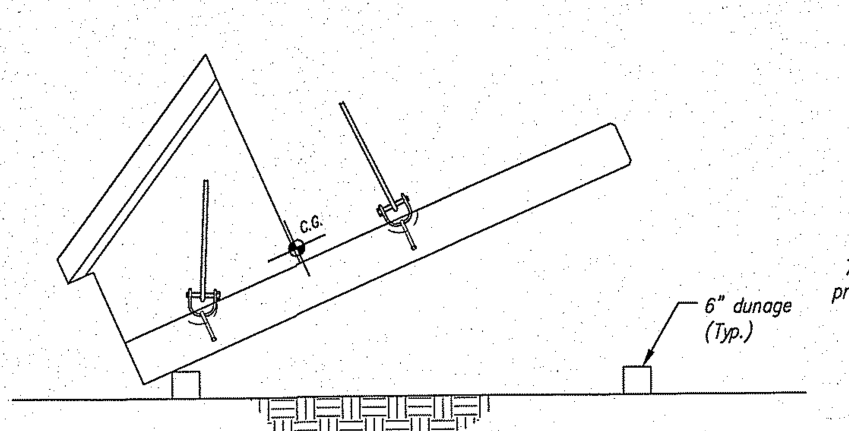

WINGWALL LIFTING DETAIL

Scale: N.T.S.

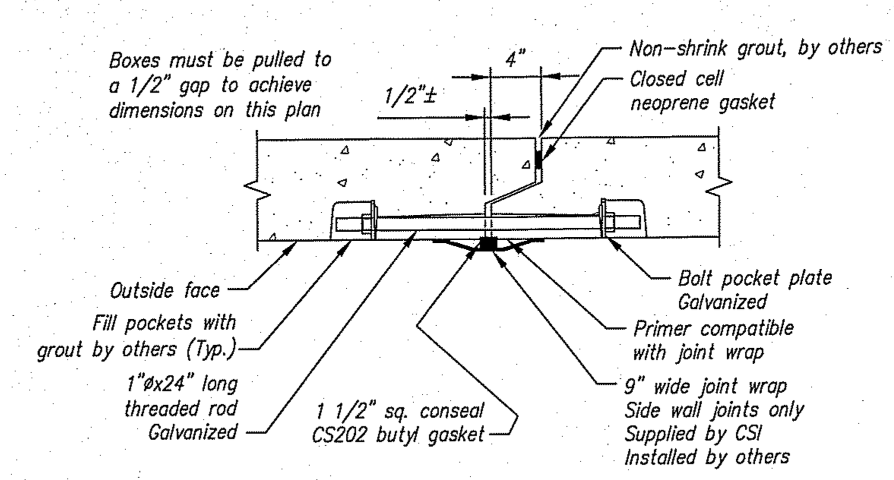

Permanent Closure Hardware (Galvanized)

CLOSURE HARDWARE DETAIL

Scale: N.T.S.

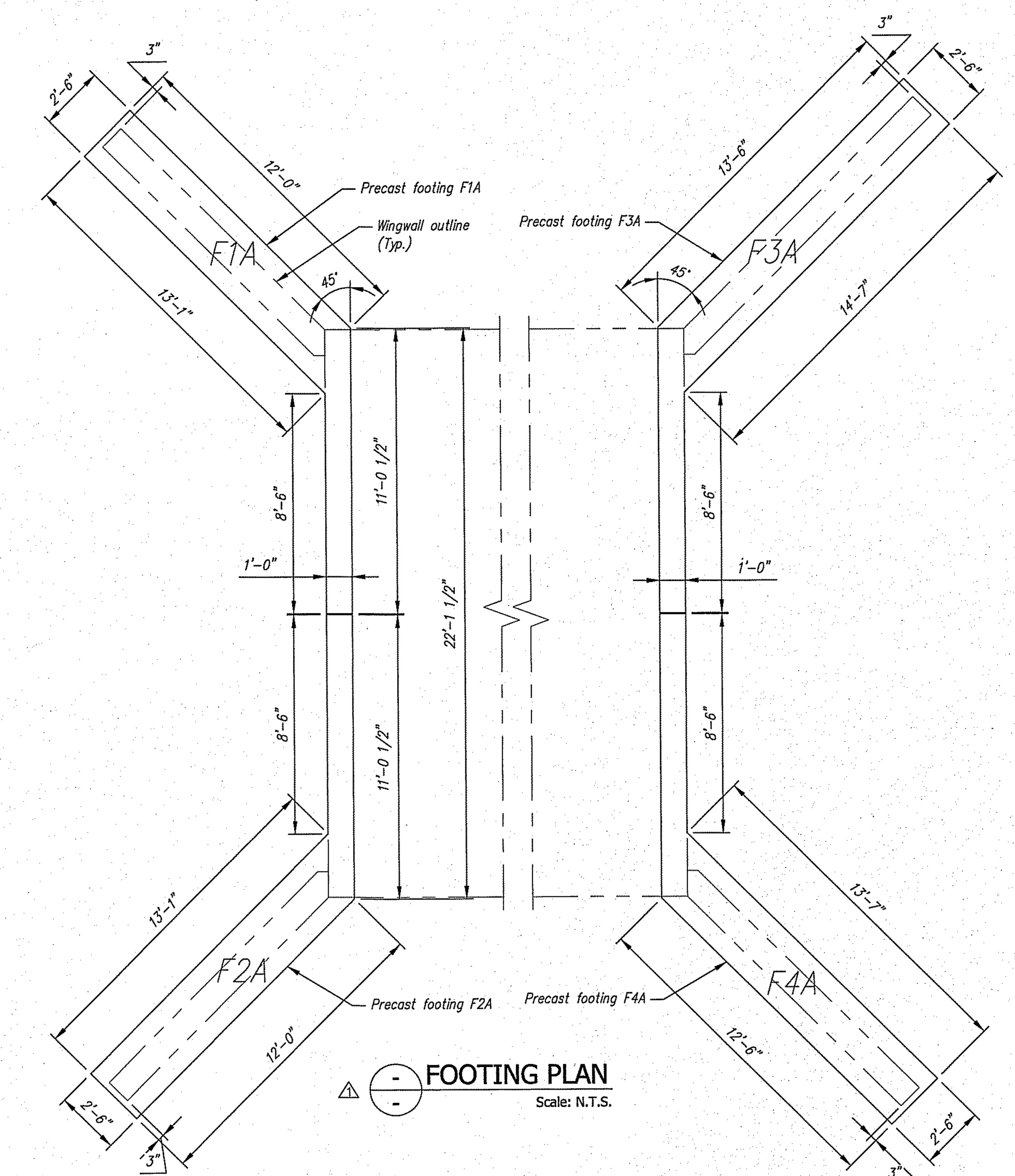

⚠ FOOTING PLAN

Scale: N.T.S.

Contractor is to verify that all information shown on drawings has been thoroughly checked, complies with the contract documents and is adequate to meet the field conditions. Some dimensions and details may differ slightly from contract drawings to accommodate the manufacturing or design process. Approval of this drawing indicates that any deviation from the contract documents has been reviewed and found to be acceptable. Production will not commence until receipt of signed, approved shop drawings.

This drawing contains information proprietary to CONCRETE SYSTEMS, INC. This drawing is disclosed with the understanding that it will be retained in confidence and its use limited solely to the purpose for which it is disclosed. It is understood that no reproduction of this drawing is authorized without permission from CONCRETE SYSTEMS, INC. and that it will be returned to CONCRETE SYSTEMS, INC. upon request.

STATE OF VERMONT CHRISTOPHER M. VICK NO. 7780 Structural LICENSED PROFESSIONAL ENGINEER
4/6/15
Stamp for structural design only

Rev.	Date	DESCRIPTION	By
5			
4			
3			
2			
1	01APR2015	CONSPAN WW ANCHORS WERE TYPE 'D', WWs WERE 10" THK, WW & FTG WEIGHTS UPDATED	RY
REVISIONS			

This drawing is based upon information provided from the following documents and/or sources:
Engineer: STATE OF VT AOT PROGRAM DEVELOPMENT
Project No: STPCULV30
Drawings: VT/AOT PROPOSED INPROVEMENT BRIDGE PROJECT SHEETS 1 THRU 24 & 32 OF 55
Specifications: ----

Other Sources: ----

CSI
Concrete Systems Inc.
9 Commercial St., Hudson, NH,03051
Phone 603-889-4163
Fax 603-889-2417

STATE AGENCY
VTrans Working to Get You There

Drawn By: R. YEAGER — Date: 09MAR2015
Reviewed By: B. KOLAWOLE — Date: 02APR2015
Approved By: — Date:

J A MCDONALD, INC.
VT/AOT BRIDGE – STEEL CULVERT REPLACEMENT
BRIDGE #6, VT ROUTE 58, IRASBURG, VT

D — 20' SPAN X 8' RISE BOX CULVERT LAYOUT — REV 1
Drawing No. C22283–L01B
Quantity: 1 — Project No: STPCULV30 — SHEET 2A OF 2A