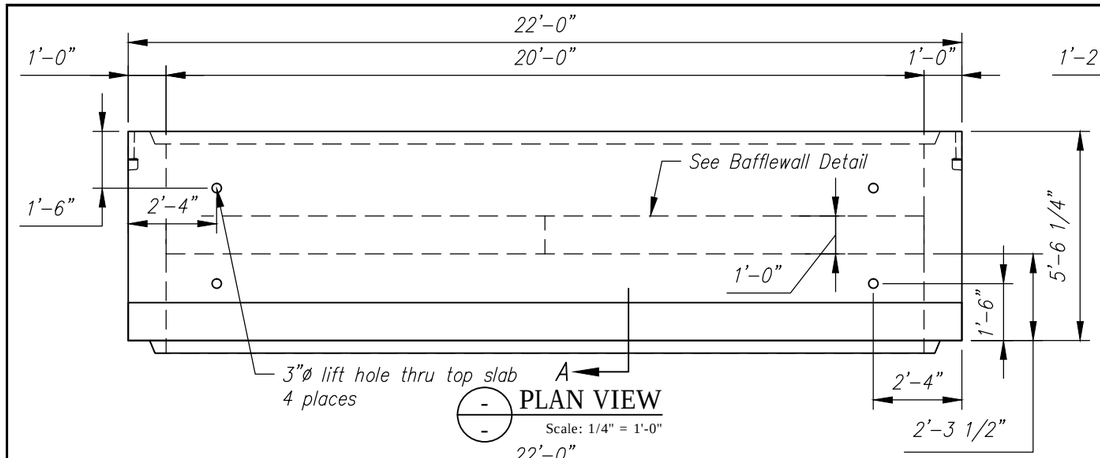

PLAN VIEW
Scale: 1/4" = 1'-0"

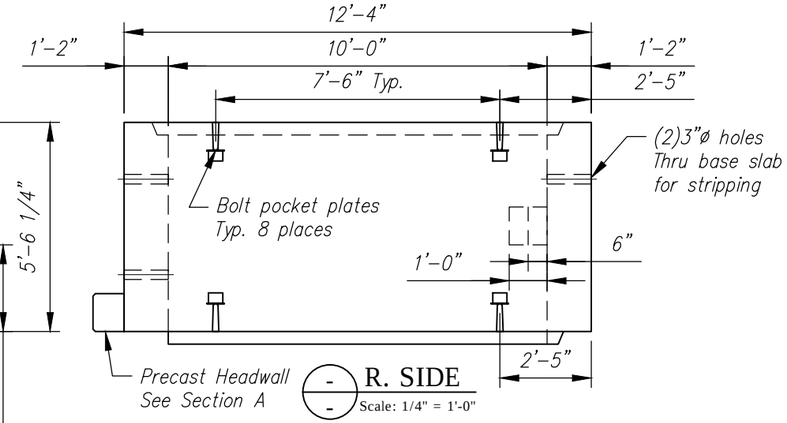

R. SIDE
Scale: 1/4" = 1'-0"

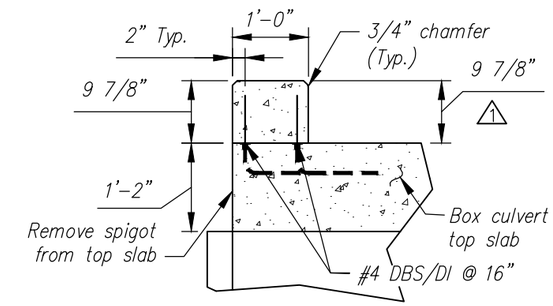

SECTION A
Scale: N.T.S.

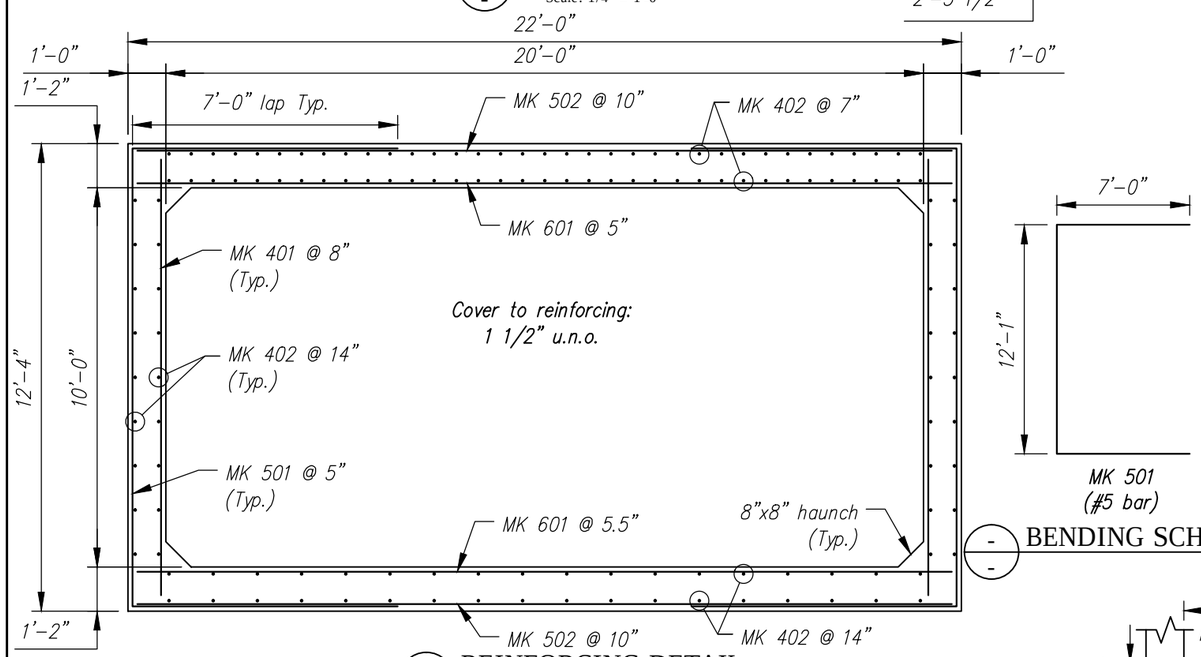

REINFORCING DETAIL
Scale: N.T.S.

BENDING SCHEDULE
Scale: N.T.S.

B3 - BILL OF MATERIALS / EMBEDS				
CSI ID#	DESCRIPTION	QTY	UM	COMMENTS
CT-00005	CONSOLIDECK SALTGUARD (SILANE SILOXANE)	0.36	GA	
EM-0005A	1" X 6 " PRESET WING INSERTS	4.00	EA	
EM-00010	DBSAE #4 X 18" BLACK	34	EA	DOWEL BAR SPLICER
EM-00014	DBSAE #6 X 18" PLAIN	38	EA	DOWEL BAR SPLICER
EM-00033	3" FOAM CORE PVC	7	FT	
EM-00125	BOLT POCKET PLATES (GALVANIZED)	4	EA	
JS-00002	1"X1"CLOSED NEOP GASKET	65	FT	AROUND BELL
RM-00013	REBAR #4 BLACK- GR 60	636	LB	
RM-00015	REBAR #5 BLACK-GR 60 40'	1017	LB	
RM-00017	REBAR #6 BLACK-GR 60 40'	807	LB	
MX-FA5000SC30	MIX DESIGN - FLY ASH 5000 SELF CONSOLIDATING	14.87	CY	
B3 BAFFLE WALL - BILL OF MATERIALS / EMBEDS				
EM-00022	DI #6 X 18" BLACK	38	EA	DOWEL IN
RM-00013	REBAR #4 BLACK- GR 60	26	LB	
MX-FA5000SC30	MIX DESIGN - FLY ASH 5000 SELF CONSOLIDATING	0.51	CY	
B3 HEADWALL - BILL OF MATERIALS / EMBEDS				
CT-00005	CONSOLIDECK SALTGUARD (SILANE SILOXANE)	0.28	GA	
EM-00018	DI #4 X 18" PLAIN	34	EA	DOWEL IN
MX-FA5000SC30	MIX DESIGN - FLY ASH 5000 SELF CONSOLIDATING	0.67	CY	

B3 Rebar Schedule			
MK		QTY	LENGTH
401	#4	18	11 '- 6 "
402	#4	142	5 '- 3 "
501	#5	27	26 '- 1 "
502	#5	14	21 '- 6 "
601	#6	27	21 '- 6 "

B3 BW Rebar Schedule			
MK		QTY	LENGTH
403	#4	2	19 '- 8 "

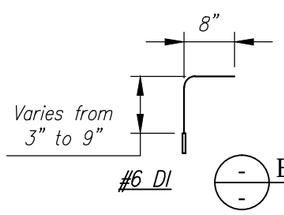

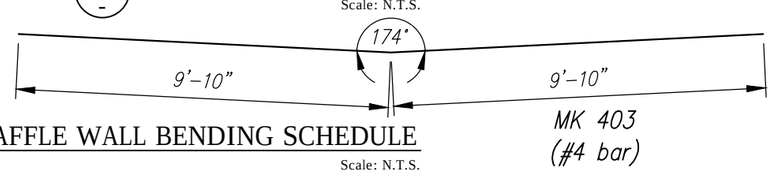

BAFFLE WALL BENDING SCHEDULE
Scale: N.T.S.

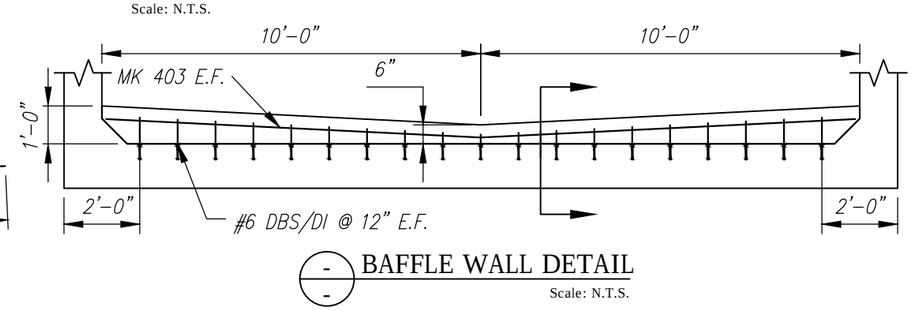

BAFFLE WALL DETAIL
Scale: N.T.S.

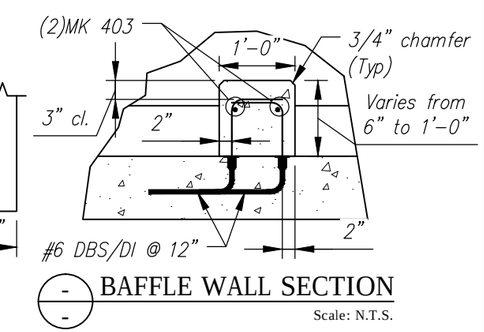

BAFFLE WALL SECTION
Scale: N.T.S.

Rev.	Date	DESCRIPTION	By
5			
4			
3			
2			
1	30JUN2015	SECTION A: 9 7/8" DIM WAS 9 3/8", REMOVED HW SKEW	RY

REVISIONS

Concrete Systems Inc.
9 Commercial St., Hudson, NH,03051
Phone 603-889-4163
Fax 603-889-2417

STATE AGENCY
VTrans Working to Get You There Vermont Agency of Transportation

Drawn By R. YEAGER	Date 16MAR2015
Concrete Cu. Yd. 16.06	Weight in Tons 32.52
Approved By M SCOTT	Date 7/1/15

J A MCDONALD, INC.
VT/AOT BRIDGE – STEEL CULVERT REPLACEMENT
BRIDGE #7, VT ROUTE 58, IRASBURG, VT

B

SHOP DRAWING – B3

Drawing No. C22283-L02-B3

REV 1

Quantity: 1 | Project No: STPCULV30 | SHEET 3 OF 9