DESIGN CALCULATIONS FOR PRECAST CONCRETE BOX CULVERT
(REV 1)

PROPOSED IMPROVEMENT
BRIDGE #7, VT ROUTE 58
IRASBURG, VT

STATE OF VERMONT
CHRISTOPHER M. WICK
NO. 77088
Structural
LICENSED
PROFESSIONAL ENGINEER
4/6/15

J. A. MCDONALD INC.

CONCRETE SYSTEMS, INC.
9 COMMERCIAL STREET
HUDSON, NH

CSI Drawing #: C22283 – LO2

TABLE OF CONTENTS

Section #	Description	Total Pages
1	Summary of Design Information	1
2	Boxcar Output: 20' x 10' B C, 4ft Earth Cover, HL93	16
3	Math Cad Calculations: 20' x 11.16' 3 sided Top Open culvert,	7
4	STAAD PRO Output: 20' x 11.16' 3 sided Top Open culvert; incl. BM & SF Diagrams	13
5	CSI LRFD Wing wall 1 Calculations	15
6	CSI LRFD Wing wall 2 Calculations	14
7	Mathcad Headwall Calculations	2
8	Bridge Load Rating	60
	TOTAL PAGES IN SET	128

9 Commercial Street Hudson, New Hampshire 03051 Phone (603) 889-4163
Fax Number: Precast Sales (603) 889-0039
Fax Number: Manhole Design and Engineering (603) 598-1344

Section 1

Summary of Design Information

REFERENCES:

AASHTO LRFD Bridge Design Specifications
ASTM C1577 Standard Specifications for Precast Reinforced Concrete Box Sections for Culverts, Storm Drains and Sewers
ACI 318 Building Code Requirements for Structural Concrete
NPCA Quality Control Manual for Precast Plants
Plans & Specifications: Proposed Improvement: Bridge #7, VT Route 58 Irasburg, VT: Sheet 1 of 55 to Sheet 55 of 55

COMPUTER PROGRAMS:

BOXCAR
STAAD PRO
MATHCAD
CSI LRFD Wing wall Spreadsheet

DESIGN PARAMETERS:

Concrete:
Design strength f'c = 5000 psi
Unit weight = 150 pcf
Reinforcing:
Yield strength fy = 60,000 psi
Cover to reinforcing = 1.5" Everywhere, u n o

Soil: *Unit weight = 140 pcf*
Lateral earth pressure coefficient (max.) = .50
Lateral earth pressure coefficient (min.) = .25

Earth Cover: *4' max*

Live Load: *HL93*

Section 2
Boxcar Output: 20’ x 10’ B C
4ft Earth Cover, HL93

BOXCAR

Version 3.1 for Windows
15 September 2010

A Computer Program for the Structural
Design of Reinforced Concrete Box
Culverts

Developed by

Simpson Gumpertz & Heger Inc.
in cooperation with

The Federal Highway Administration
and
The American Concrete Pipe Association

The successful application and use of this software product is dependent on the application of skilled engineering judgment and is the responsibility of the user. The user must select input values suitable to his specific installation. The information presented in the computer output is for review, interpretation, application and approval by a qualified engineer.

****

ANY IMPLIED OR EXPRESS WARRANTIES COVERING THE SOFTWARE PROGRAM OR PROGRAM USER MANUAL INCLUDING ANY WARRANTIES OF MERCHANTABILITY OR FITNESS FOR A PARTICULAR PURPOSE ARE EXPRESSLY EXCLUDED. SIMPSON GUMPERTZ & HEGER INC., THE AMERICAN CONCRETE PIPE ASSOCIATION, AND THE FEDERAL HIGHWAY ADMINISTRATION SHALL NOT BE LIABLE FOR SPECIAL, INCIDENTAL, CONSEQUENTIAL INDIRECT OR OTHER SIMILAR DAMAGES ARISING FROM BREACH OF WARRANTY, BREACH OF CONTRACT OR OTHER LEGAL THEORY EVEN IF SUCH PARTIES HAVE BEEN ADVISED OF SUCH DAMAGES.

****

Date: 03-10-2015
Time: 13:48:36
Filename - C22283-2

Filename - C22283-2
Job Description - IrasburgVT 20x10 HL93 Cov 4'max

GEOMETRY

Span	20. ft	Top Slab Thickness	14. in.
Rise	10. ft	Bottom Slab Thickness	14. in.
Min. Depth of Fill	4. ft	Sidewall Thickness	12. in.
Max. Depth of Fill	4. ft	Length of Precast Section	7.5 ft
Depth Increment	0. ft		

HAUNCH DIMENSIONS		CONCRETE COVERS	
Top Vertical	8. in.	Top Outside	1.50 in.
Top Horizontal	8. in.	Bottom Outside	1.50 in.
Bottom Vertical	8. in.	Sidewall Outside	1.50 in.
Bottom Horizontal	8. in.	Top Inside	1.50 in.
		Bottom Inside	1.50 in.
		Sidewall Inside	1.50 in.

MATERIAL PROPERTIES

Main Reinforcing Yield Stress	60000.	psi
Total Service Stress Limit, % of Yield Stress	100	%
Design Concrete Strength	5000.	psi
Concrete Density	150.	pcf

DESIGN SPECIFICATION AASHTO LRFD

REINFORCING DATA

	DIAMETER	SPACING
Top Slab Outside Face(AS7)	0.625 in.	10 in.
Bottom Slab Outside Face(AS8)	0.625 in.	10 in.
Sidewall Outside Face(AS1)	0.625 in.	5 in.
Top Slab Inside Face(AS2)	0.75 in.	5.5 in.
Bottom Slab Inside Face(AS3)	0.75 in.	5 in.
Sidewall Inside Face(AS4)	0.5 in.	8 in.

The diameters are used to estimate depth to tension reinforcing from compression face. They do not represent required reinforcing diameters.

SOIL LOAD DATA

Soil Density	140 pcf
Minimum Lateral Pressure Coefficient	0.25
Maximum Lateral Pressure Coefficient	0.50
Installation Type	Embankment/Compacted
Soil-Structure Interaction Factor	1.036

LIVE LOAD DATA AASHTO - LRFD
HL-93 Loading

Live Load: 1

Live Load Type	HS-Series
Live Load Magnitude	20 tons
Footprint specification	by Code
Tire Footprint Length	10 in.
Tire Footprint Width	20 in.

Live Load Distribution Factor	1.15
Direction of Travel	Parallel to Span
Impact Factor	Design Code
Lane Load	64 lb/ft

Live Load: 2

Live Load Type	Interstate - Tandem
Live Load Magnitude	25 kips
Footprint specification	by Code
Tire Footprint Length	10 in.
Tire Footprint Width	20 in.
Live Load Distribution Factor	1.15
Direction of Travel	Parallel to Span
Impact Factor	Design Code
Lane Load	64 lb/ft

SURCHARGE LOADS

Vertical Pressure	0.0 lb/sq. ft
Horiz. Pressure at Culvert Top	0.0 lb/sq. ft
Horiz. Pressure at Culvert Bottom	0.0 lb/sq. ft
Application Code	Additional Dead Load

FLUID LOADS

Depth of Fluid	10.0 ft
Fluid Density	62.5 pcf

LOAD COMBINATIONS

Load Factors:Std

	Self Weight	V. Earth	L. Earth	Water	Live
Max	1.25	1.30	1.35	1.00	1.75
Min	0.90	0.90	0.90	0.00	0.00

Load Modifiers:

Self Weight	V. Earth	L. Earth	Water	Live
1.00	1.05	1.05	1.00	1.00

Load Factor for Axial Thrust:
1.00

Number of Load Combinations:
4

Load Combinations: Std

Purpose	Self W	Earth	Lat E.	Fluid	V Live	AppVeh	Surch	V Sur	H Sur
MaxV/MaxH	Max	Max	Max	0.00	Max	Max	A	Max	Max
MaxV/MinH	Max	Max	Min	Max	Max	0.00	A	Max	0.00
MinV/MaxH	Min	Min	Max	0.00	0.00	Max	A	0.00	Max
Fatigue					0.00				

STRENGTH REDUCTION FACTORS

Flexure	1.00
Shear	0.90

MEMBER LOADS
Load Conditions 1 to 10

Load Condition	Member	Load Intensity at Start of Load (k/in./ft)	Load Intensity at End of Load (k/in./ft)	Distance from A-End to Start of Load (in.)	Distance from A-End to End of Load (in.)
1	1	0.015	0.015	0.0	252.0
1	2	0.000	0.000	0.0	0.0
1	3	0.028	0.028	0.0	252.0
1	4	0.000	0.000	0.0	0.0
2	1	0.048	0.048	0.0	252.0
2	2	0.000	0.000	0.0	0.0
2	3	0.048	0.048	0.0	252.0
2	4	0.000	0.000	0.0	0.0
3	1	0.000	0.000	0.0	0.0
3	2	0.012	0.048	0.0	134.0
3	3	0.000	0.000	0.0	0.0
3	4	0.048	0.012	0.0	134.0
4	1	0.000	0.000	0.0	0.0
4	2	0.000	-0.052	7.0	127.0
4	3	-0.002	-0.002	6.0	246.0
4	4	-0.052	0.000	7.0	127.0
5	1	0.000	0.000	0.0	0.0
5	2	0.012	0.048	0.0	134.0
5	3	0.000	0.000	0.0	0.0
5	4	0.048	0.012	0.0	134.0
6	1	0.000	0.000	0.0	0.0
6	2	0.000	0.000	0.0	0.0
6	3	0.000	0.000	0.0	0.0
6	4	0.000	0.000	0.0	0.0
7	1	0.000	0.000	0.0	252.0
7	2	0.000	0.000	0.0	0.0
7	3	0.000	0.000	0.0	252.0
7	4	0.000	0.000	0.0	0.0
8	1	0.000	0.000	0.0	0.0
8	2	0.015	0.009	0.0	134.0
8	3	0.000	0.000	0.0	0.0
8	4	0.009	0.015	0.0	134.0
9	1	0.000	0.000	0.0	252.0
9	2	0.000	0.000	0.0	0.0
9	3	0.000	0.000	0.0	252.0
9	4	0.000	0.000	0.0	0.0
10	1	0.000	0.000	0.0	0.0
10	2	0.000	0.000	0.0	134.0
10	3	0.000	0.000	0.0	0.0
10	4	0.000	0.000	0.0	134.0

****** MEMBER LOADS ******

Truck Number 1: AASHTO HS-20
Truck Number 2: AASHTO Interstate Tandem

TRUCK WHEEL LOADS ACTING ON CULVERT TOP SLAB
(Includes Impact Factor: 1.165 and multiple presence factor: 1.2)

Load Case Number	Truck Position Number	Truck Number	---- Load ---- Number	Intensity kip/in/ft	Distance from A-End To Start Of Load in.	To End of Load in.
11	1	1	1	0.014	135.40	200.60
11	1	1	2	0.056	0.00	32.60
11	1	1	3	0.000	0.00	0.00
12	2	1	1	0.014	153.53	218.73
12	2	1	2	0.056	0.00	50.73
12	2	1	3	0.000	0.00	0.00
13	3	1	1	0.014	161.53	226.73
13	3	1	2	0.056	0.00	58.73
13	3	1	3	0.000	0.00	0.00
14	4	1	1	0.014	207.46	252.00
14	4	1	2	0.056	39.46	104.66
14	4	1	3	0.000	0.00	0.00
15	5	1	1	0.014	234.43	252.00
15	5	1	2	0.056	66.43	131.63
15	5	1	3	0.000	0.00	0.00
16	6	1	1	0.000	0.00	0.00
16	6	1	2	0.056	93.40	158.60
16	6	1	3	0.000	0.00	0.00
17	7	1	1	0.000	0.00	0.00
17	7	1	2	0.056	120.37	185.57
17	7	1	3	0.056	0.00	17.57
18	8	1	1	0.000	0.00	0.00
18	8	1	2	0.056	147.34	212.54
18	8	1	3	0.056	0.00	44.54
19	9	1	1	0.000	0.00	0.00
19	9	1	2	0.056	193.28	252.00
19	9	1	3	0.056	25.28	90.48
20	10	1	1	0.000	0.00	0.00
20	10	1	2	0.056	201.28	252.00
20	10	1	3	0.056	33.28	98.48
21	11	1	1	0.000	0.00	0.00
21	11	1	2	0.056	219.40	252.00
21	11	1	3	0.056	51.40	116.60
22	1	2	1	0.000	111.40	176.60
22	1	2	2	0.050	0.00	32.60
22	1	2	3	0.000	0.00	0.00
23	2	2	1	0.000	129.53	194.73
23	2	2	2	0.050	0.00	50.73
23	2	2	3	0.000	0.00	0.00
24	3	2	1	0.000	137.53	202.73
24	3	2	2	0.050	2.13	58.73
24	3	2	3	0.050	0.00	2.13

25	4	2	1	0.000	183.46	248.66
25	4	2	2	0.050	48.06	104.66
25	4	2	3	0.050	0.00	48.06
26	5	2	1	0.000	210.43	252.00
26	5	2	2	0.050	75.03	131.63
26	5	2	3	0.050	18.43	75.03
27	6	2	1	0.000	237.40	252.00
27	6	2	2	0.050	102.00	158.60
27	6	2	3	0.050	45.40	102.00
28	7	2	1	0.000	0.00	0.00
28	7	2	2	0.050	128.97	185.57
28	7	2	3	0.050	72.37	128.97
29	8	2	1	0.000	0.00	0.00
29	8	2	2	0.050	155.94	212.54
29	8	2	3	0.050	99.34	155.94
30	9	2	1	0.000	0.00	0.00
30	9	2	2	0.050	201.88	252.00
30	9	2	3	0.050	145.28	201.88
31	10	2	1	0.000	0.00	0.00
31	10	2	2	0.050	209.88	252.00
31	10	2	3	0.050	153.28	209.88
32	11	2	1	0.000	0.00	0.00
32	11	2	2	0.050	228.00	252.00
32	11	2	3	0.050	171.40	228.00

TRUCK WHEEL LOADS ACTING ON CULVERT BOTTOM SLAB

Load Case Number	Truck Position Number	Truck Number	---Load Intensity--- at start	at end	Distance from A-End To Start Of Load	To End of Load
			kip/in/ft	kip/in/ft	in.	in.
11	1	1	0.000	0.027	51.40	252.00
12	2	1	0.000	0.039	58.62	252.00
13	3	1	0.000	0.043	56.52	252.00
14	4	1	0.004	0.029	0.00	252.00
15	5	1	0.009	0.022	0.00	252.00
16	6	1	0.014	0.014	0.00	252.00
17	7	1	0.017	0.020	0.00	252.00
18	8	1	0.019	0.030	0.00	252.00
19	9	1	0.034	0.021	0.00	252.00
20	10	1	0.032	0.019	0.00	252.00
21	11	1	0.026	0.017	0.00	252.00
22	1	2	0.000	0.067	203.10	252.00
23	2	2	0.000	0.067	175.91	252.00
24	3	2	0.000	0.067	163.91	252.00
25	4	2	0.000	0.067	95.01	252.00
26	5	2	0.000	0.051	26.91	252.00
27	6	2	0.010	0.036	0.00	252.00
28	7	2	0.024	0.021	0.00	252.00
29	8	2	0.039	0.006	0.00	252.00
30	9	2	0.067	0.000	0.00	160.09
31	10	2	0.067	0.000	0.00	148.09
32	11	2	0.067	0.000	0.00	120.90

****** SUMMARY OF SHEAR ANALYSES OF SECTIONS ******

Section (1)	Controlling Load Combin. (2)	Ultimate Shear Vu (kip/ft)	Allowable Shear Phi*Vc (kip/ft)	Diagonal Tension Index	Depth to Reinf. (in.)	Required Shear Steel (3) (in.²/ft/line)
13 (t)	2-pos	15.0	27.8	0.54	12.13	0.000
12 (t)	2-pos	15.0	27.8	0.54	12.13	0.000
45 (t)	1-neg	-14.8	27.9	0.53	12.19	0.000
44 (t)	1-neg	-14.8	27.9	0.53	12.19	0.000
14 (s)	1-neg	-4.2	14.9	0.28	10.19	0.000
15 (s)	1-neg	-4.2	14.9	0.28	10.19	0.000
16 (s)	1-neg	4.6	14.9	0.31	10.19	0.000
17 (s)	1-neg	4.6	14.9	0.31	10.19	0.000
18 (b)	1-neg	-15.2	27.9	0.55	12.19	0.000
19 (b)	1-neg	-15.2	27.9	0.55	12.19	0.000
97 (b)	1-pos	15.2	27.9	0.55	12.19	0.000
96 (b)	1-pos	15.2	27.9	0.55	12.19	0.000

Notes

1. (t) top slab, (b) bottom slab, (s) side wall

2. Load combination that controls shear steel requirements. Other load combinations may control stirrup spacing and increased flexural steel requirements per AASHTO LRFD section 5.8.3.5

3. Required shear steel area based on user specified stirrup spacing. If the user defined stirrup spacing is too large, based on an examination of the entire slab, the shear steel area will change from the value shown in this table. See SHEAR DESIGN TABLE on the next page for shear steel design.

****** SHEAR DESIGN TABLE ******

Member	Top Slab	Sidewall	Bottom Slab
Section Controlling Stirrup Design	12	17	96
Load Combo Controlling Stirrup Design	2-pos	1-neg	1-pos
Vu*D/Mu (1)	5.516	-0.117	-2.348
Ultimate Shear (kip/ft)	14.99	4.59	15.22
Ultimate Thrust (kip/ft)	0.02	12.35	6.76
Reinf. Ratio	0.0071	0.0058	0.0023
Depth to Reinf. (in.)	12.13	10.19	12.19
Distance to A-END, (in.)	26.13	25.19	26.12
Diagonal Tension Phi * Vc (kip/ft)	27.76	14.91	27.90
Ultimate Shear/ Conc.Strength, Phi*Vc	0.54	0.31	0.55
Shear Steel Area (in^2/ft/line)	---	---	---
Stirrup Spacing (in.)	---	---	---
Number of Lines of Stirrups from A-end	---	---	---
Stirrups Start at	---	---	---
Number of Lines of Stirrups from B-end	---	---	---
Stirrups Start at	---	---	---
Flex. Steel Provisions Per AASHTO LRFD Section5.8.3.5	provisions satisfied / not applic.	provisions satisfied / not applic.	provisions satisfied / not applic.

Notes

1. Vu*d/Mu is limited to a maximum of 1.0 for design.

******* FLEXURE DESIGN TABLE *******

rebar/ wall / face	Depth to Reinf in.	------Ultimate------ Moment kip-in /ft	Thrust kip/ft	Flex. Reinf. in²/ft	Max Reinf Area in²/ft	Crack Index	Reinf Area in²/ft	----------Governing-------- Mode	section #	pos	load combo
(1)				(2)	(3)	(4)	(5)	(6)	(7)		(8)
AS1,s,o	10.2	-479.3	12.35	0.711	2.884	0.85	0.711	Flexure	7	15.0	2
AS2,t,i	12.1	713.6	0.50	1.028	3.578	0.91	1.028	Flexure	1	126.0	2
AS3,b,i	12.1	687.0	1.26	0.981	3.542	0.88	0.981	Flexure	11	126.0	2
AS4,s,i	18.2	-520.5	12.35	0.000	--	0.00	0.288	Min Stl	8	7.0	1
AS7,t,o	12.1	--	0.50	0.000	--	0.00	0.336	Min Stl	32	130.0	2
AS8,b,o	12.1	--	1.26	0.000	--	0.00	0.336	Min Stl	84	122.0	2

Notes:
1. t-top slab, b-bottom slab, s-sidewall; i-inside face; o-outside face
2. Required reinforcing to develop ultimate flexural strength.
3. Maximum allowable flexural reinforcement area per compression provisions.
4. Crack Index is defined as the total service load stress divided by the allowable total service load stress.
5. Reinforcing required to meet all design criteria. The governing criteria is indicated under the column 'Governing Mode'. If 'REDES' the culvert must be redesigned because the required steel amount exceeds the allowable amount as dictated by compression provisions.
6. Governing modes:
   - Flexure - governed by provisions for flexure and axial force.
   - Min Stl - governed by provisions for minimum steel.
   - Crack - governed by provisions for cracking. The reinforcing may be reduced by decreasing the maximum reinforcing spacing.
   - Compres - the culvert must be redesigned because the required steel amount exceeds the allowable amount as dictated by compression provisions. Try increasing the depth of the slab or decreasing loads.
   - Fatigue - governed by provisions for fatigue
7. Location of section, measured with respect to End A (center) line dimensions of culvert).
8. Pos/Neg indicates truck positioned to produce maximum positive/negative moment.
9. Minimum flexural reinforcing computed as 0.002 times the gross concrete section.

Sidewall outside face steel (AS1) must be bent at the corner and extended:

top slab: 19 inches* + tension lap splice length
bottom slab: 19 inches* + tension lap splice length
*measured from the bend point

There may be negative moment in the top slab to 47 inches from the bend point. Development lengths must be added.

There may be negative moment in the bottom slab to 55 inches

from the bend point. Development lengths must be added.

BOX CULVERT DESIGN SUMMARY SHEET
20.00 ft Span x 10.00 ft Rise

****

INSTALLATION DATA

Height of Fill Over Culvert, ft	4.00
Soil Unit Weight, pcf	140.
Minimum Lateral Soil Pressure Coefficient	0.250
Maximum Lateral Soil Pressure Coefficient	0.500
Soil-Structure Interaction Factor	1.036
Installation Type	Embankment/Compacted

MATERIAL PROPERTIES

Minimum Specified Reinforcing Yield Strength, ksi	60.00
Concrete - Specified Compressive Strength, ksi	5.00

GEOMETRY

Top Slab Thickness, in.	14.0
Side Wall Thickness, in.	12.0
Bottom Slab Thickness, in.	14.0
Top Horizontal Haunch Dimension, in.	8.0
Bottom Horizontal Haunch Dimension, in.	8.0
Top Vertical Haunch Dimension, in.	8.0
Bottom Vertical Haunch Dimension, in.	8.0
Concrete Cover Over Steel, in.	
Top Slab - Outside Face	1.50
Bottom Slab - Outside Face	1.50
Side Wall - Outside Face	1.50
Top Slab - Inside Face	1.50
Bottom Slab - Inside Face	1.50
Side Wall - Inside Face	1.50

REINFORCING DATA

LOCATION	AREA (in.²/ft)	STIRRUPS REQUIRED?
TRANSVERSE		
Side Wall - Outside Face(AS1)	0.711	No
Top Slab - Inside Face(AS2)	1.028	No
Bottom Slab - Inside Face(AS3)	0.981	No
Side Wall - Inside Face(AS4)	0.288	No
Top Slab - Outside Face(AS7)	0.336	No
Bottom Slab - Outside Face(AS8)	0.336	No

Sidewall outside face steel (AS1) must be bent at the corner and extended:

top slab: 19 inches* + tension lap splice length
bottom slab: 19 inches* + tension lap splice length

*measured from the bend point

There may be negative moment in the top slab to 47 inches from the bend point. Development lengths must be added.

There may be negative moment in the bottom slab to 55 inches from the bend point. Development lengths must be added.

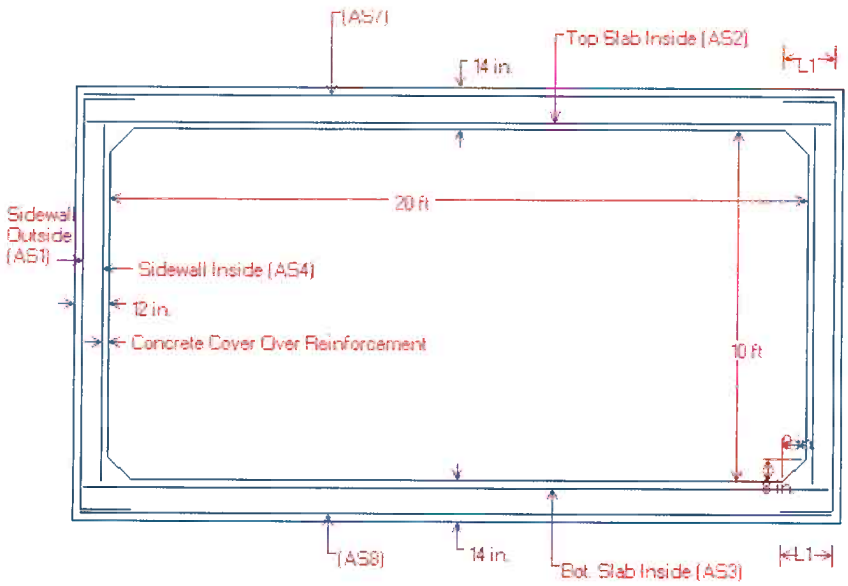

* <L1> is Splice Length
* (AS7) is Top Slab Outside
* (AS8) is Bottom Slab Outside
* See Box Culvert Design Summary Sheet for transverse and distribution reinforcement, as required.
* For sidewall thicknesses of 6 in. and above, extend AS2 and AS3 a min. of 4 in. beyond the inside face of the sidewall. For thicknesses less than 6 in., extend AS2 and AS3 at least to within 1-1/2 in. of the outside face of the sidewall.

Notes:

1) Other reinforcement schemes that provide the required reinforcement areas at all locations identified in the program output are acceptable.
2) Longitudinal reinforcement is not shown for clarity, see AASHTO M259 for longitudinal reinforcement and for additional requirements.

Section 3
Math Cad Calculations: 20’ x 11.16’
3 sided Top Open culvert,

LRFD METHOD

20 ft x 11.16 ft *(3 sided - Top open)*

Reference Dwg: C22283-LO2

REFERENCES:

1. **ASTM C1504 Standard Specification for Precast Concrete 3-Sided Culverts, Storm Drains and Sewers;**
2. **AASHTO LRFD Bridge Design Specifications**
3. **Attachment B: STAAD.Pro Computer Output for Culvert; Fixed Support in Global X-Dir. at Joint 2**

DESIGN PARAMETERS:

$\gamma_w := 62.4\frac{lbf}{ft^3}$ unit weight of water

$\gamma_c := 150\frac{lbf}{ft^3}$ unit weight of concrete

$\gamma_e := 140\frac{lbf}{ft^3}$ unit weight of earth

$K_{min} := .25$ min. earth pressure coefficient

$K_{max} := .5$ max. earth pressure coefficient

Geometry:

$ClearSpan1 := 20ft$ ClearSpan1

$ClearRise1 := 11.16ft$ ClearRise1

Member Properties:

$b := 12in$ design section width

$t_b := 14in$ bottom slab thickness

$t_w := 12in$ wall thickness

$L_{Section} := 6.0ft$ Section Length

$Span1 := ClearSpan1 + t_w$ $\boxed{Span1 = 21ft}$

$Rise1 := ClearRise1 + \left(\frac{t_b}{2}\right)$ $\boxed{Rise1 = 11.743ft}$

Dead Load: (DL)

$D_{base1} := 2t_w \cdot ClearRise1 \cdot \gamma_c \frac{ft}{Span1}$ $\boxed{D_{base1} = 159.429 \cdot \frac{lbf}{ft}}$

Lateral Earth Pressure:

$H1 := 0$ $H1 = 0$ soil depth at top of wall

$H2 := H1 + ClearRise1$ $H2 = 11.16ft$ soil depth at bottom of wall

$LEPMIN := K_{min} \cdot \gamma_e \cdot 1ft$ $LEPMIN = 35 \cdot \frac{lbf}{ft^2}$ minimum lateral earth pressure

$LEPMAX := K_{max} \cdot \gamma_e \cdot 1ft$ $LEPMAX = 70 \cdot \frac{lbf}{ft^2}$ maximum lateral earth pressure

Minimum **(EMIN)**

$w_{et} := H1 \cdot LEPMIN$ $w_{eb} := H2 \cdot LEPMIN$

$\boxed{w_{et} = 0 \cdot \frac{lbf}{ft}}$ top of wall

$\boxed{w_{eb} = 390.6 \cdot \frac{lbf}{ft}}$ bottom of wall

9 Commercial Street
Hudson, NH
(800) 342-3374
Fax (603) 598-1344

Maximum **(EMAX)**

$w_{et} := H1 \cdot LEPMAX$ $w_{eb} := H2 \cdot LEPMAX$

$w_{et} = 0 \cdot \frac{lbf}{ft}$ top of wall $w_{eb} = 781.2 \cdot \frac{lbf}{ft}$ bottom of wall

Internal Fluid Pressure: (IFP)

$w_{ib} := \gamma_w \cdot ClearRise1 \cdot 1ft$

$w_{ib} = 696 \cdot \frac{lbf}{ft}$ bottom of wall

22 ft x 7.33 ft - 3 Sided Top Open Culvert : LRFD : Reinforcement Design

DESIGN PARAMETERS

$Span := 20ft$	Clear Span	$Rise := 11.16$	Max Clear Rise
$t_b := 14in$	Bottom Slab thickness	$t_w := 12in$	Wall thickness
$b_v := 12in$	Width	$f_c := 5000psi$	$f_y := 60000psi$

STAAD.Pro ANALYSIS RESULTS: Attachment "A"

Att. No	X-Dir. Support Conditions kips/ft	Slab Positive (Ins. Face) Moment (ft-k)	Slab Negative (Outs. Face) Moment (ft-k)	Wall Negative (Outs. Face) Moment (ft-k)	Wall Positive (Ins. Face) Moment (ft-k)
"B":	Fixed	$M_{uSP} := 32.04 \cdot ft \cdot kip$	$M_{uSN} := 23.06 \cdot ft \cdot kip$	$M_{uWN} := 21.87 \cdot ft \cdot kip$	$M_{uWP} := 14.44 \cdot ft \cdot kip$

Wall Shear	Bottom Slab Shear
$V_{uW} := 5.88kip$	$V_{uS} := 4.5 \cdot kip$

BOTTOM SLAB, TOP REINFORCEMENT; Members 3 & 4 :

Section @ Support Location (Intersection Slab with the Wall):

Shear Capacity

$t_b = 14 \cdot in$ $\quad c := 1.5in$ rebar clear distance $\quad d_b := 0.625in$ bar diameter

$f_c := 5 \quad ksi$

$d := t_b - c - \frac{d_b}{2}$ $\quad d = 12.19 \cdot in$ $\quad \beta := 2$

$d_{v1} := 0.9 \cdot d$ $\quad d_{v1} = 10.97 \cdot in$

$d_{v2} := 0.72 \cdot t_b$ $\quad d_{v2} = 10.08 \cdot in$ $\quad d_v := max(d_{v1}, d_{v2})$

$\phi V_c := .9 \cdot .0316 \cdot \beta \cdot \sqrt{f_c} \cdot ksi \cdot b_v \cdot d_v$ $\quad \boxed{\phi V_c = 1.67 \times 10^4 \cdot lbf}$

$V_{uS} = 4.5 \times 10^3 \cdot lbf$ $\quad if(\phi V_c > V_{uS}, "OK", "NG") = "OK"$

Minimum, Temperature and Shrinkage Reinforcement:

Check Minimum Reinforcement, Ratio of Reinforcement Area to GROSS Concrete Area:

*** 3-Sided Culvert - AASHTO 12.14.5.8
Ast/Agross = 0.002:
Primary reinforcement in the direction of the span, at all cross sections subject to flexural tension, at the inside face of walls, and in each direction at the top of the slabs if cover <2ft.;

$A_{sMin} := 12in \cdot t_b \cdot 0.002$ $\quad A_{sMin} = 0.336 \cdot in^2$

BOTTOM SLAB, TOP REINFORCEMENT; Members 3 & 4
Moment: Positive (Inside Face)

$d_b := 0.625in$ bar diameter

$t_b = 14 \cdot in$ Bottom slab thickness

$c := 1.5in$ rebar clear distance

$d := t_b - c - \frac{d_b}{2}$ $d = 12.19 \cdot in$

$A_s := 0.60in^2$ #5 @ 6 As=0.62in^2

$f_c := 5000\ psi$

$f_y := 60000$

$a := \frac{A_s \cdot f_y}{.85 \cdot f_c \cdot 12in}$ $a = 0.706 \cdot in$ $f_y := 60000psi$

$\phi M_n := .95 \cdot A_s \cdot f_y \cdot \left(d - \frac{a}{2}\right)$ $\phi M_n = 3.373 \times 10^4 \cdot ft \cdot lbf$ Positive Moment Capacity

$M_{uSP} = 3.204 \times 10^4 \cdot ft \cdot lbf$ $if\left(\phi M_n > M_{uSP}, "OK", "NG"\right) = "OK"$

AASHTO Crack Control: Bottom Slab (Critical Ms)

*** Culvert - AASHTO 5.7.3.4 & 12.14.5.7

$M_s := 16270 \cdot ft \cdot lbf$ Service Load Moment in the Bottom Slab

$N_s := 470lbf$ Axial thrust at Service limit state in the Bottom Slab - (Value Concurrent with Ms)

$e := \frac{M_s}{N_s} + \left(d - \frac{t_b}{2}\right)$ $e = 420.59 \cdot in$

$j := 0.74 + 0.1\left(\frac{e}{d}\right)$ $j = 4.19$ $j_{max} := .9$ $j1 := min\left(j, j_{max}\right)$ $j1 = 0.9$

$i := \frac{1}{1 - \frac{j1 \cdot d}{e}}$

$f_s := \frac{M_s + N_s \cdot \left(d - \frac{t_b}{2}\right)}{A_s \cdot j1 \cdot i \cdot d}$ $f_s = 29.25 \cdot ksi$ Reinforcement stress under service load condition

$d_c := c + \frac{d_b}{2}$ $d_c = 1.81 \cdot in$

$\gamma_e := 0.75$ Class 2 Exposure factor

$\beta_s := 1 + \frac{d_c}{0.7\left(t_b - d_c\right)}$ $\beta_s = 1.21$

$SpacingUsed := 6$

$Spacing := \frac{700 \cdot \gamma_e}{\beta_s \cdot \frac{f_s}{ksi}} - 2\frac{d_c}{in}$ $Spacing = 11.18$

$if\left(Spacing > SpacingUsed, "OK", "NG"\right) = "OK"$

BOTTOM SLAB, BOTTOM REINFORCEMENT; Members 3 & 4
Moment: Negative (Outside Face)

$d_b := 0.5in$ bar diameter

$t_b = 14 \cdot in$ Bottom Slab thickness

$c := 1.5in$ rebar clear distance

$d := t_b - c - \frac{d_b}{2}$ $d = 12.25 \cdot in$

$A_s := 0.48in^2$ #4 @ 5 As=0.48in^2

$f_c := 5000\ psi$

$f_y := 60000$

$a := \frac{A_s \cdot f_y}{.85 \cdot f_c \cdot 12in}$ $a = 0.565 \cdot in$ $f_y := 60000psi$

$\phi M_n := .95 \cdot A_s \cdot f_y \cdot \left(d - \frac{a}{2}\right)$ $\phi M_n = 2.729 \times 10^4 \cdot ft \cdot lbf$ Positive Moment Capacity

$M_{uSN} = 2.306 \times 10^4 \cdot ft \cdot lbf$ $if\left(\phi M_n > M_{uSN}, "OK", "NG"\right) = "OK"$

AASHTO Crack Control: Top Slab (Critical Ms)

*** Culvert - AASHTO 5.7.3.4 & 12.14.5.7

$M_s := 17080 \cdot ft \cdot lbf$ Service Load Moment in the Bottom Slab

$N_s := 4360lbf$ Axial thrust at Service limit state in the Bottom Slab - (Value Concurrent with Ms)

$e := \frac{M_s}{N_s} + \left(d - \frac{t_b}{2}\right)$ $e = 52.26 \cdot in$

$j := 0.74 + 0.1\left(\frac{e}{d}\right)$ $j = 1.17$ $j_{max} := .9$ $j1 := min\left(j, j_{max}\right)$ $j1 = 0.9$

$i := \frac{1}{1 - \frac{j1 \cdot d}{e}}$

$f_s := \frac{M_s + N_s \cdot \left(d - \frac{t_b}{2}\right)}{A_s \cdot j1 \cdot i \cdot d}$ $f_s = 33.97 \cdot ksi$ Reinforcement stress under service load condition

$d_c := c + \frac{d_b}{2}$ $d_c = 1.75 \cdot in$

$\gamma_e := 0.75$ Class 2 Exposure factor

$\beta_s := 1 + \frac{d_c}{0.7\left(t_b - d_c\right)}$ $\beta_s = 1.2$

$SpacingUsed := 5$

$Spacing := \frac{700 \cdot \gamma_e}{\beta_s \cdot \frac{f_s}{ksi}} - 2\frac{d_c}{in}$ $Spacing = 9.33$

$if\left(Spacing > SpacingUsed, "OK", "NG"\right) = "OK"$

Walls: Members 1 & 2

Shear Capacity

$t_w = 12 \cdot in$ $\quad c := 1.5in$ rebar clear distance $\quad d_b := 0.5in$ bar diameter

$f_c := 5 \quad ksi$

$d := t_w - c - \frac{d_b}{2}$ $\quad d = 10.25 \cdot in$ $\quad \beta := 2$

$d_{v1} := 0.9 \cdot d$ $\quad d_{v1} = 9.22 \cdot in$

$d_{v2} := 0.72 \cdot t_w$ $\quad d_{v2} = 8.64 \cdot in$ $\quad d_v := max(d_{v1}, d_{v2})$

$\phi V_c := 0.9 \cdot .0316 \cdot \beta \cdot \sqrt{f_c} \cdot ksi \cdot b_v \cdot d_v$ $\quad \boxed{\phi V_c = 1.41 \times 10^4 \cdot lbf}$

$V_{uW} = 5.88 \times 10^3 \cdot lbf$ $\quad if(\phi V_c > V_{uW}, "OK", "NG") = "OK"$

Minimum Reinforcement:

Check Minimum Reinforcement, Ratio of Reinforcement Area to GROSS Concrete Area:

*** 3-Sided Culvert - AASHTO 12.14.5.8
Ast/Agross = 0.002:
Primary reinforcement in the direction of the span, at all cross sections subject to flexural tension, at the inside face of walls, and in each direction at the top of the slabs if cover <2ft.;

$A_{sMin} := 12in \cdot t_w \cdot 0.002$ $\quad A_{sMin} = 0.288 \cdot in^2$

Negative (Outside Face) Moment

$d_b := 0.5in$ bar diameter $\quad c := 1.5in$ rebar clear distance $\quad d := t_w - c - \frac{d_b}{2}$ $\quad d = 10.25 \cdot in$

$A_s := 0.48in^2$ $\quad$ #4 @ 5
As=0.48in^2 $\quad f_c := 5000 \quad psi$

$f_y := 60000$ $\quad a := \frac{A_s \cdot f_y}{.85 \cdot f_c \cdot 12in}$ $\quad a = 0.565 \cdot in$ $\quad f_y := 60000psi$

$\phi M_n := .95 \cdot A_s \cdot f_y \cdot \left(d - \frac{a}{2}\right)$ $\quad \boxed{\phi M_n = 2.273 \times 10^4 \cdot ft \cdot lbf}$ Negative Moment Capacity

$M_{uWN} = 2.187 \times 10^4 \cdot ft \cdot lbf$ $\quad if(\phi M_n > M_{uWN}, "OK", "NG") = "OK"$

AASHTO Crack Control: Wall (Critical Ms)

*** Culvert - AASHTO 5.7.3.4 & 12.14.5.7

$M_s := 16200 \cdot ft \cdot lbf$ Service Load Moment in the Wall Slab

$N_s := 1670lbf$ Axial thrust at Service limit state in the Wall - (Value Concurrent with Ms)

$e := \frac{M_s}{N_s} + \left(d - \frac{t_w}{2}\right)$ $\quad e = 120.66 \cdot in$

$j := 0.74 + 0.1\left(\frac{e}{d}\right)$ $\quad j = 1.92$ $\quad j_{max} := .9$ $\quad j1 := min(j, j_{max})$ $\quad j1 = 0.9$

$i := \frac{1}{1 - \frac{j1 \cdot d}{e}}$

$f_s := \frac{M_s + N_s \cdot \left(d - \frac{t_w}{2}\right)}{A_s \cdot j1 \cdot i \cdot d}$ $\quad f_s = 42.03 \cdot ksi$ Reinforcement stress under service load condition

$d_c := c + \frac{d_b}{2}$ $\quad d_c = 1.75 \cdot in$

$\gamma_e := 0.75$ Class 2 Exposure factor

$\beta_s := 1 + \frac{d_c}{0.7(t_w - d_c)}$ $\quad \beta_s = 1.24$

$SpacingUsed := 5$

$Spacing := \frac{700 \cdot \gamma_e}{\beta_s \cdot \frac{f_s}{ksi}} - 2\frac{d_c}{in}$ $\quad Spacing = 6.54$

$if\ (Spacing > SpacingUsed, "OK", "NG") = "OK"$

Positive (Inside Face) Moment

$d_b := 0.5in$ bar diameter $\quad c := 1.5in$ rebar clear distance $\quad d := t_w - c - \frac{d_b}{2}$ $\quad d = 10.25 \cdot in$

$A_s := 0.32in^2$ #4 @ 7.5 As=0.32in^2 $\quad f_c := 5000\ psi$

$f_y := 60000$ $\quad a := \frac{A_s \cdot f_y}{.85 \cdot f_c \cdot 12in}$ $\quad a = 0.376 \cdot in$ $\quad f_y := 60000psi$

$\phi M_n := .95 \cdot A_s \cdot f_y \cdot \left(d - \frac{a}{2}\right)$ $\quad \phi M_n = 1.529 \times 10^4 \cdot ft \cdot lbf$ Positive Moment Capacity

$M_{uWP} = 1.444 \times 10^4 \cdot ft \cdot lbf$ $\quad if\left(\phi M_n > M_{uWP}, "OK", "NG"\right) = "OK"$

Minimum Reinforcement;

$t_w = 12 \cdot in$ $\quad A_{sMin} := 12in \cdot t_w \cdot 0.002$ $\quad A_{sMin} = 0.288 \cdot in^2$

Section 4
STAAD PRO Output: 20’ x 11.16’
3 sided Top Open culvert
incl. BMD & SFD

```
**************************************************
*                                                *
*           STAAD.Pro V8i SELECTseries5          *
*           Version  20.07.10.65                 *
*           Proprietary Program of               *
*           Bentley Systems, Inc.                *
*           Date=    MAR  5, 2015                *
*           Time=    16:14:22                    *
*                                                *
*      USER ID:                                  *
**************************************************
```

```
     1. STAAD PLANE
INPUT FILE: 20x11.16-3sided.Fixed.STD
     2. START JOB INFORMATION
     3. ENGINEER DATE 15-MAR-15
     4. ENGINEER NAME BK
     5. JOB NO C22283-LO2
     6. END JOB INFORMATION
     7. INPUT WIDTH 79
     8. UNIT FEET KIP
     9. JOINT COORDINATES
    10. 1 0 0 0; 2 21 0 0; 3 0 11.74 0; 4 21 11.74 0; 5 10.5 0 0
    11. MEMBER INCIDENCES
    12. 1 1 3; 2 2 4; 3 1 5; 4 5 2
    13. DEFINE MATERIAL START
    14. ISOTROPIC CONCRETE
    15. E 453600
    16. POISSON 0.17
    17. DENSITY 0.14999
    18. ALPHA 5.5E-006
    19. DAMP 0.05
    20. END DEFINE MATERIAL
    21. MEMBER PROPERTY AMERICAN
    22. 1 2 PRIS YD 1 ZD 1
    23. 3 4 PRIS YD 1.16 ZD 1
    24. CONSTANTS
    25. MATERIAL CONCRETE ALL
    26. SUPPORTS
    27. 1 FIXED BUT MZ
    28. 2 FIXED BUT FX MZ
    29. MEMBER OFFSET
    30. 1 START 0 0.583 0
    31. 2 START 0 0.583 0
    32. 3 START 0.5 0 0
    33. 4 END -0.5 0 0
    34. *** CASE 1
    35. LOAD 1 LOADTYPE NONE  TITLE LOAD CASE 1- DEAD LOAD- NO TOP SLAB
    36. MEMBER LOAD
    37. 3 4 UNI GY 0.159
    38. SELFWEIGHT Y 1
```

```
39. LOAD 2 LOADTYPE NONE  TITLE -EMAX
40. MEMBER LOAD
41. 1 TRAP GX 0.781 0
42. 2 TRAP GX -0.781 0
43. LOAD 3 LOADTYPE NONE  TITLE -EMIN
44. MEMBER LOAD
45. 1 TRAP GX 0.391 0
46. 2 TRAP GX -0.391 0
47. LOAD 4 LOADTYPE NONE  TITLE -IPF-WATER INSIDE
48. MEMBER LOAD
49. 2 TRAP GX 0.696 0
50. 1 TRAP GX -0.696 0
51. LOAD COMB 100 COMBINATION LOAD CASE -MAX SHEAR AND MOMENT OUTSIDE
52. 1 1.35 2 1.35
53. LOAD COMB 101 COMBINATION LOAD CASE -MAX SHEAR AND MOMENT INSIDE
54. 1 1.35 3 1.0 4 1.0
55. LOAD COMB 300 COMBINATION LOAD CASE -CRACK CONTROL-MAX OUTSIDE
56. 1 1.0 2 1.0
57. LOAD COMB 301 COMBINATION LOAD CASE -CRACK CONTROL-MAX OUTSIDE
58. 1 1.0 2 1.0 4 1.0
59. PERFORM ANALYSIS


        P R O B L E M   S T A T I S T I C S
        -----------------------------------

  NUMBER OF JOINTS          5  NUMBER OF MEMBERS       4
  NUMBER OF PLATES          0  NUMBER OF SOLIDS        0
  NUMBER OF SURFACES        0  NUMBER OF SUPPORTS      2


       SOLVER USED IS THE OUT-OF-CORE BASIC SOLVER

  ORIGINAL/FINAL BAND-WIDTH=     4/     4/     12 DOF
TOTAL      PRIMARY LOAD CASES =     4, TOTAL DEGREES OF FREEDOM =      12
TOTAL LOAD COMBINATION  CASES =     4  SO FAR.
  SIZE OF STIFFNESS MATRIX =        1 DOUBLE  KILO-WORDS
  REQRD/AVAIL. DISK SPACE  =     12.0/  43656.2 MB



60. ***PERFORM ANALYSIS PRINT LOAD DATA
61. LOAD LIST 1 TO 4
62. PRINT SUPPORT REACTION ALL
```

SUPPORT REACTIONS -UNIT KIP FEET STRUCTURE TYPE = PLANE

JOINT	LOAD	FORCE-X	FORCE-Y	FORCE-Z	MOM-X	MOM-Y	MOM Z
1	1	0.00	-5.00	0.00	0.00	0.00	0.00
	2	0.00	0.00	0.00	0.00	0.00	0.00
	3	0.00	0.00	0.00	0.00	0.00	0.00
	4	0.00	0.00	0.00	0.00	0.00	0.00
2	1	0.00	-5.00	0.00	0.00	0.00	0.00
	2	0.00	0.00	0.00	0.00	0.00	0.00
	3	0.00	0.00	0.00	0.00	0.00	0.00
	4	0.00	0.00	0.00	0.00	0.00	0.00

********** END OF LATEST ANALYSIS RESULT **********

63. LOAD LIST 300 301
64. PRINT MEMBER FORCES ALL

MEMBER END FORCES STRUCTURE TYPE = PLANE

ALL UNITS ARE -- KIP FEET (LOCAL)

MEMBER	LOAD	JT	AXIAL	SHEAR-Y	SHEAR-Z	TORSION	MOM-Y	MOM-Z
1	300	1	-1.67	4.36	0.00	0.00	0.00	16.20
		3	0.00	0.00	0.00	0.00	0.00	0.00
	301	1	-1.67	0.47	0.00	0.00	0.00	1.76
		3	0.00	0.00	0.00	0.00	0.00	0.00
2	300	2	-1.67	-4.36	0.00	0.00	0.00	-16.20
		4	0.00	0.00	0.00	0.00	0.00	0.00
	301	2	-1.67	-0.47	0.00	0.00	0.00	-1.76
		4	0.00	0.00	0.00	0.00	0.00	0.00
3	300	1	4.36	-3.33	0.00	0.00	0.00	-17.08
		5	-4.36	0.00	0.00	0.00	0.00	0.43
	301	1	0.47	-3.33	0.00	0.00	0.00	-0.37
		5	-0.47	0.00	0.00	0.00	0.00	-16.27
4	300	5	4.36	0.00	0.00	0.00	0.00	-0.43
		2	-4.36	-3.33	0.00	0.00	0.00	17.08
	301	5	0.47	0.00	0.00	0.00	0.00	16.27
		2	-0.47	-3.33	0.00	0.00	0.00	0.37

********** END OF LATEST ANALYSIS RESULT **********

```
65. ***
66. LOAD LIST 100 101
67. PRINT FORCE ENVELOPE NSECTION 6 LIST ALL
```

MEMBER FORCE ENVELOPE

ALL UNITS ARE KIP FEET

MEMB	DISTANCE		FY	LD	MZ	LD	FZ	LD	MY	LD
1	0.00	MAX	5.88	100	21.87	100	0.00	101	0.00	101
		MIN	-1.70	101	-6.33	101	0.00	101	0.00	101
	0.93	MAX	4.94	100	16.85	100	0.00	101	0.00	101
		MIN	-1.43	101	-4.87	101	0.00	101	0.00	101
	1.86	MAX	4.08	100	12.66	100	0.00	101	0.00	101
		MIN	-1.18	101	-3.66	101	0.00	101	0.00	101
	2.79	MAX	3.31	100	9.23	100	0.00	101	0.00	101
		MIN	-0.96	101	-2.67	101	0.00	101	0.00	101
	3.72	MAX	2.61	100	6.48	100	0.00	101	0.00	101
		MIN	-0.76	101	-1.87	101	0.00	101	0.00	101
	4.65	MAX	2.00	100	4.34	100	0.00	101	0.00	101
		MIN	-0.58	101	-1.26	101	0.00	101	0.00	101
	5.58	MAX	1.47	100	2.73	100	0.00	101	0.00	101
		MIN	-0.43	101	-0.79	101	0.00	101	0.00	101
	6.51	MAX	1.02	100	1.58	100	0.00	101	0.00	101
		MIN	-0.30	101	-0.46	101	0.00	101	0.00	101
	7.44	MAX	0.65	100	0.81	100	0.00	101	0.00	101
		MIN	-0.19	101	-0.23	101	0.00	101	0.00	101
	8.37	MAX	0.37	100	0.34	100	0.00	101	0.00	101
		MIN	-0.11	101	-0.10	101	0.00	101	0.00	101
	9.30	MAX	0.16	100	0.10	100	0.00	101	0.00	101
		MIN	-0.05	101	-0.03	101	0.00	101	0.00	101
	10.23	MAX	0.04	100	0.01	100	0.00	101	0.00	101
		MIN	-0.01	101	0.00	101	0.00	101	0.00	101
	11.16	MAX	0.00	101	0.00	101	0.00	101	0.00	101
		MIN	0.00	101	0.00	101	0.00	101	0.00	101

MAX/MIN FORCE VALUES FOR MEMB 1, AMONGST ALL SECT LOCATIONS

	FY/ FZ	DIST DIST	LD LD	MZ/ MY	DIST DIST	LD LD	FX	DIST	LD
MAX.	5.88	0.00	100	21.87	0.00	100			
	0.00	0.00	100	0.00	0.00	100	0.00	11.16	100
MIN.	-1.70	0.00	101	-6.33	0.00	101			
	0.00	11.16	101	0.00	11.16	101	2.26 T	0.00	101

2	0.00	MAX	1.70	101	6.33	101	0.00	101	0.00	101
		MIN	-5.88	100	-21.87	100	0.00	101	0.00	101
	0.93	MAX	1.43	101	4.87	101	0.00	101	0.00	101
		MIN	-4.94	100	-16.85	100	0.00	101	0.00	101

1.86	MAX	1.18	101	3.66	101	0.00	101	0.00	101
	MIN	-4.08	100	-12.66	100	0.00	101	0.00	101
2.79	MAX	0.96	101	2.67	101	0.00	101	0.00	101
	MIN	-3.31	100	-9.23	100	0.00	101	0.00	101
3.72	MAX	0.76	101	1.87	101	0.00	101	0.00	101
	MIN	-2.61	100	-6.48	100	0.00	101	0.00	101
4.65	MAX	0.58	101	1.26	101	0.00	101	0.00	101
	MIN	-2.00	100	-4.34	100	0.00	101	0.00	101
5.58	MAX	0.43	101	0.79	101	0.00	101	0.00	101
	MIN	-1.47	100	-2.73	100	0.00	101	0.00	101
6.51	MAX	0.30	101	0.46	101	0.00	101	0.00	101
	MIN	-1.02	100	-1.58	100	0.00	101	0.00	101
7.44	MAX	0.19	101	0.23	101	0.00	101	0.00	101
	MIN	-0.65	100	-0.81	100	0.00	101	0.00	101
8.37	MAX	0.11	101	0.10	101	0.00	101	0.00	101
	MIN	-0.37	100	-0.34	100	0.00	101	0.00	101
9.30	MAX	0.05	101	0.03	101	0.00	101	0.00	101
	MIN	-0.16	100	-0.10	100	0.00	101	0.00	101
10.23	MAX	0.01	101	0.00	101	0.00	101	0.00	101
	MIN	-0.04	100	-0.01	100	0.00	101	0.00	101
11.16	MAX	0.00	101	0.00	101	0.00	101	0.00	101
	MIN	0.00	101	0.00	101	0.00	101	0.00	101

MAX/MIN FORCE VALUES FOR MEMB 2, AMONGST ALL SECT LOCATIONS

	FY/ FZ	DIST DIST	LD LD	MZ/ MY	DIST DIST	LD LD	FX	DIST	LD
MAX.	1.70	0.00	101	6.33	0.00	101			
	0.00	0.00	100	0.00	0.00	100	0.00	11.16	100
MIN.	-5.88	0.00	100	-21.87	0.00	100			
	0.00	11.16	101	0.00	11.16	101	2.26 T	0.00	101

3	0.00	MAX	-4.50	101	9.57	101	0.00	101	0.00	101
		MIN	-4.50	101	-23.06	100	0.00	101	0.00	101
	0.83	MAX	-4.12	101	13.16	101	0.00	101	0.00	101
		MIN	-4.12	101	-19.47	100	0.00	101	0.00	101
	1.67	MAX	-3.75	101	16.44	101	0.00	101	0.00	101
		MIN	-3.75	101	-16.19	100	0.00	101	0.00	101
	2.50	MAX	-3.37	101	19.40	101	0.00	101	0.00	101
		MIN	-3.37	101	-13.22	100	0.00	101	0.00	101
	3.33	MAX	-3.00	101	22.05	101	0.00	101	0.00	101
		MIN	-3.00	101	-10.57	100	0.00	101	0.00	101
	4.17	MAX	-2.62	101	24.40	101	0.00	101	0.00	101
		MIN	-2.62	101	-8.23	100	0.00	101	0.00	101
	5.00	MAX	-2.25	101	26.42	101	0.00	101	0.00	101
		MIN	-2.25	101	-6.20	100	0.00	101	0.00	101
	5.83	MAX	-1.87	101	28.14	101	0.00	101	0.00	101
		MIN	-1.87	101	-4.48	100	0.00	101	0.00	101
	6.67	MAX	-1.50	101	29.55	101	0.00	101	0.00	101
		MIN	-1.50	101	-3.08	100	0.00	101	0.00	101
	7.50	MAX	-1.12	101	30.64	101	0.00	101	0.00	101
		MIN	-1.12	101	-1.98	100	0.00	101	0.00	101

8.33	MAX	-0.75	101	31.42	101	0.00	101	0.00	101
	MIN	-0.75	101	-1.20	100	0.00	101	0.00	101
9.17	MAX	-0.37	101	31.89	101	0.00	101	0.00	101
	MIN	-0.37	101	-0.73	100	0.00	101	0.00	101
10.00	MAX	0.00	101	32.04	101	0.00	101	0.00	101
	MIN	0.00	101	-0.58	100	0.00	101	0.00	101

MAX/MIN FORCE VALUES FOR MEMB 3, AMONGST ALL SECT LOCATIONS

	FY/ FZ	DIST DIST	LD LD	MZ/ MY	DIST DIST	LD LD	FX	DIST	LD
MAX.	0.00	10.00	100	32.04	10.00	101			
	0.00	0.00	100	0.00	0.00	100	5.88 C	0.00	100
MIN.	-4.50	0.00	101	-23.06	0.00	100			
	0.00	10.00	101	0.00	10.00	101	1.70 T	10.00	101

4	0.00	MAX	0.00	101	32.04	101	0.00	101	0.00	101
		MIN	0.00	101	-0.58	100	0.00	101	0.00	101
	0.83	MAX	0.37	101	31.89	101	0.00	101	0.00	101
		MIN	0.37	101	-0.73	100	0.00	101	0.00	101
	1.67	MAX	0.75	101	31.42	101	0.00	101	0.00	101
		MIN	0.75	101	-1.20	100	0.00	101	0.00	101
	2.50	MAX	1.12	101	30.64	101	0.00	101	0.00	101
		MIN	1.12	101	-1.98	100	0.00	101	0.00	101
	3.33	MAX	1.50	101	29.55	101	0.00	101	0.00	101
		MIN	1.50	101	-3.08	100	0.00	101	0.00	101
	4.17	MAX	1.87	101	28.14	101	0.00	101	0.00	101
		MIN	1.87	101	-4.48	100	0.00	101	0.00	101
	5.00	MAX	2.25	101	26.42	101	0.00	101	0.00	101
		MIN	2.25	101	-6.20	100	0.00	101	0.00	101
	5.83	MAX	2.62	101	24.40	101	0.00	101	0.00	101
		MIN	2.62	101	-8.23	100	0.00	101	0.00	101
	6.67	MAX	3.00	101	22.05	101	0.00	101	0.00	101
		MIN	3.00	101	-10.57	100	0.00	101	0.00	101
	7.50	MAX	3.37	101	19.40	101	0.00	101	0.00	101
		MIN	3.37	101	-13.22	100	0.00	101	0.00	101
	8.33	MAX	3.75	101	16.44	101	0.00	101	0.00	101
		MIN	3.75	101	-16.19	100	0.00	101	0.00	101
	9.17	MAX	4.12	101	13.16	101	0.00	101	0.00	101
		MIN	4.12	101	-19.47	100	0.00	101	0.00	101
	10.00	MAX	4.50	101	9.57	101	0.00	101	0.00	101
		MIN	4.50	101	-23.06	100	0.00	101	0.00	101

MAX/MIN FORCE VALUES FOR MEMB 4, AMONGST ALL SECT LOCATIONS

	FY/ FZ	DIST DIST	LD LD	MZ/ MY	DIST DIST	LD LD	FX	DIST	LD

MAX.	4.50	10.00	100	32.04	0.00	101			
	0.00	0.00	100	0.00	0.00	100	5.88 C	0.00	100
MIN.	0.00	0.00	101	-23.06	10.00	100			
	0.00	10.00	101	0.00	10.00	101	1.70 T	10.00	101

********** END OF FORCE ENVELOPE FROM INTERNAL STORAGE **********

68. LOAD LIST 300 301
69. PRINT FORCE ENVELOPE NSECTION 6 LIST ALL

MEMBER FORCE ENVELOPE

ALL UNITS ARE KIP FEET

MEMB	DISTANCE		FY	LD	MZ	LD	FZ	LD	MY	LD
1	0.00	MAX	4.36	300	16.20	300	0.00	301	0.00	301
		MIN	0.47	301	1.76	301	0.00	301	0.00	301
	0.93	MAX	3.66	300	12.48	300	0.00	301	0.00	301
		MIN	0.40	301	1.36	301	0.00	301	0.00	301
	1.86	MAX	3.03	300	9.38	300	0.00	301	0.00	301
		MIN	0.33	301	1.02	301	0.00	301	0.00	301
	2.79	MAX	2.45	300	6.84	300	0.00	301	0.00	301
		MIN	0.27	301	0.74	301	0.00	301	0.00	301
	3.72	MAX	1.94	300	4.80	300	0.00	301	0.00	301
		MIN	0.21	301	0.52	301	0.00	301	0.00	301
	4.65	MAX	1.48	300	3.22	300	0.00	301	0.00	301
		MIN	0.16	301	0.35	301	0.00	301	0.00	301
	5.58	MAX	1.09	300	2.03	300	0.00	301	0.00	301
		MIN	0.12	301	0.22	301	0.00	301	0.00	301
	6.51	MAX	0.76	300	1.17	300	0.00	301	0.00	301
		MIN	0.08	301	0.13	301	0.00	301	0.00	301
	7.44	MAX	0.48	300	0.60	300	0.00	301	0.00	301
		MIN	0.05	301	0.07	301	0.00	301	0.00	301
	8.37	MAX	0.27	300	0.25	300	0.00	301	0.00	301
		MIN	0.03	301	0.03	301	0.00	301	0.00	301
	9.30	MAX	0.12	300	0.08	300	0.00	301	0.00	301
		MIN	0.01	301	0.01	301	0.00	301	0.00	301
	10.23	MAX	0.03	300	0.01	300	0.00	301	0.00	301
		MIN	0.00	301	0.00	301	0.00	301	0.00	301
	11.16	MAX	0.00	301	0.00	301	0.00	301	0.00	301
		MIN	0.00	301	0.00	301	0.00	301	0.00	301

MAX/MIN FORCE VALUES FOR MEMB 1, AMONGST ALL SECT LOCATIONS

	FY/ FZ	DIST DIST	LD LD	MZ/ MY	DIST DIST	LD LD	FX	DIST	LD
MAX.	4.36	0.00	300	16.20	0.00	300			
	0.00	0.00	300	0.00	0.00	300	0.00	11.16	300
MIN.	0.00	11.16	301	0.00	11.16	301			
	0.00	11.16	301	0.00	11.16	301	1.67 T	0.00	301

2	0.00	MAX	-0.47	301	-1.76	301	0.00	301	0.00	301
		MIN	-4.36	300	-16.20	300	0.00	301	0.00	301
	0.93	MAX	-0.40	301	-1.36	301	0.00	301	0.00	301
		MIN	-3.66	300	-12.48	300	0.00	301	0.00	301

1.86	MAX	-0.33	301	-1.02	301	0.00	301	0.00	301
	MIN	-3.03	300	-9.38	300	0.00	301	0.00	301
2.79	MAX	-0.27	301	-0.74	301	0.00	301	0.00	301
	MIN	-2.45	300	-6.84	300	0.00	301	0.00	301
3.72	MAX	-0.21	301	-0.52	301	0.00	301	0.00	301
	MIN	-1.94	300	-4.80	300	0.00	301	0.00	301
4.65	MAX	-0.16	301	-0.35	301	0.00	301	0.00	301
	MIN	-1.48	300	-3.22	300	0.00	301	0.00	301
5.58	MAX	-0.12	301	-0.22	301	0.00	301	0.00	301
	MIN	-1.09	300	-2.03	300	0.00	301	0.00	301
6.51	MAX	-0.08	301	-0.13	301	0.00	301	0.00	301
	MIN	-0.76	300	-1.17	300	0.00	301	0.00	301
7.44	MAX	-0.05	301	-0.07	301	0.00	301	0.00	301
	MIN	-0.48	300	-0.60	300	0.00	301	0.00	301
8.37	MAX	-0.03	301	-0.03	301	0.00	301	0.00	301
	MIN	-0.27	300	-0.25	300	0.00	301	0.00	301
9.30	MAX	-0.01	301	-0.01	301	0.00	301	0.00	301
	MIN	-0.12	300	-0.08	300	0.00	301	0.00	301
10.23	MAX	0.00	301	0.00	301	0.00	301	0.00	301
	MIN	-0.03	300	-0.01	300	0.00	301	0.00	301
11.16	MAX	0.00	301	0.00	301	0.00	301	0.00	301
	MIN	0.00	301	0.00	301	0.00	301	0.00	301

MAX/MIN FORCE VALUES FOR MEMB 2, AMONGST ALL SECT LOCATIONS

	FY/ FZ	DIST DIST	LD LD	MZ/ MY	DIST DIST	LD LD	FX	DIST	LD
MAX.	0.00	11.16	300	0.00	11.16	300			
	0.00	0.00	300	0.00	0.00	300	0.00	11.16	300
MIN.	-4.36	0.00	300	-16.20	0.00	300			
	0.00	11.16	301	0.00	11.16	301	1.67 T	0.00	301

3	0.00	MAX	-3.33	301	-0.37	301	0.00	301	0.00	301
		MIN	-3.33	301	-17.08	300	0.00	301	0.00	301
	0.83	MAX	-3.05	301	2.28	301	0.00	301	0.00	301
		MIN	-3.05	301	-14.42	300	0.00	301	0.00	301
	1.67	MAX	-2.77	301	4.71	301	0.00	301	0.00	301
		MIN	-2.77	301	-11.99	300	0.00	301	0.00	301
	2.50	MAX	-2.50	301	6.91	301	0.00	301	0.00	301
		MIN	-2.50	301	-9.79	300	0.00	301	0.00	301
	3.33	MAX	-2.22	301	8.87	301	0.00	301	0.00	301
		MIN	-2.22	301	-7.83	300	0.00	301	0.00	301
	4.17	MAX	-1.94	301	10.61	301	0.00	301	0.00	301
		MIN	-1.94	301	-6.09	300	0.00	301	0.00	301
	5.00	MAX	-1.66	301	12.11	301	0.00	301	0.00	301
		MIN	-1.66	301	-4.59	300	0.00	301	0.00	301
	5.83	MAX	-1.39	301	13.38	301	0.00	301	0.00	301
		MIN	-1.39	301	-3.32	300	0.00	301	0.00	301
	6.67	MAX	-1.11	301	14.42	301	0.00	301	0.00	301
		MIN	-1.11	301	-2.28	300	0.00	301	0.00	301
	7.50	MAX	-0.83	301	15.23	301	0.00	301	0.00	301
		MIN	-0.83	301	-1.47	300	0.00	301	0.00	301

8.33	MAX	-0.55	301	15.81	301	0.00	301	0.00	301
	MIN	-0.55	301	-0.89	300	0.00	301	0.00	301
9.17	MAX	-0.28	301	16.16	301	0.00	301	0.00	301
	MIN	-0.28	301	-0.54	300	0.00	301	0.00	301
10.00	MAX	0.00	301	16.27	301	0.00	301	0.00	301
	MIN	0.00	301	-0.43	300	0.00	301	0.00	301

MAX/MIN FORCE VALUES FOR MEMB 3, AMONGST ALL SECT LOCATIONS

	FY/ FZ	DIST DIST	LD LD	MZ/ MY	DIST DIST	LD LD	FX	DIST	LD
MAX.	0.00	10.00	300	16.27	10.00	301			
	0.00	0.00	300	0.00	0.00	300	4.36 C	0.00	300
MIN.	-3.33	0.00	301	-17.08	0.00	300			
	0.00	10.00	301	0.00	10.00	301	0.47 C	10.00	301

4	0.00	MAX	0.00	301	16.27	301	0.00	301	0.00	301
		MIN	0.00	301	-0.43	300	0.00	301	0.00	301
	0.83	MAX	0.28	301	16.16	301	0.00	301	0.00	301
		MIN	0.28	301	-0.54	300	0.00	301	0.00	301
	1.67	MAX	0.55	301	15.81	301	0.00	301	0.00	301
		MIN	0.55	301	-0.89	300	0.00	301	0.00	301
	2.50	MAX	0.83	301	15.23	301	0.00	301	0.00	301
		MIN	0.83	301	-1.47	300	0.00	301	0.00	301
	3.33	MAX	1.11	301	14.42	301	0.00	301	0.00	301
		MIN	1.11	301	-2.28	300	0.00	301	0.00	301
	4.17	MAX	1.39	301	13.38	301	0.00	301	0.00	301
		MIN	1.39	301	-3.32	300	0.00	301	0.00	301
	5.00	MAX	1.66	301	12.11	301	0.00	301	0.00	301
		MIN	1.66	301	-4.59	300	0.00	301	0.00	301
	5.83	MAX	1.94	301	10.61	301	0.00	301	0.00	301
		MIN	1.94	301	-6.09	300	0.00	301	0.00	301
	6.67	MAX	2.22	301	8.87	301	0.00	301	0.00	301
		MIN	2.22	301	-7.83	300	0.00	301	0.00	301
	7.50	MAX	2.50	301	6.91	301	0.00	301	0.00	301
		MIN	2.50	301	-9.79	300	0.00	301	0.00	301
	8.33	MAX	2.77	301	4.71	301	0.00	301	0.00	301
		MIN	2.77	301	-11.99	300	0.00	301	0.00	301
	9.17	MAX	3.05	301	2.28	301	0.00	301	0.00	301
		MIN	3.05	301	-14.42	300	0.00	301	0.00	301
	10.00	MAX	3.33	301	-0.37	301	0.00	301	0.00	301
		MIN	3.33	301	-17.08	300	0.00	301	0.00	301

MAX/MIN FORCE VALUES FOR MEMB 4, AMONGST ALL SECT LOCATIONS

FY/ FZ	DIST DIST	LD LD	MZ/ MY	DIST DIST	LD LD	FX	DIST	LD

```
| MAX.      3.33  10.00  300     16.27   0.00  301
|           0.00   0.00  300      0.00   0.00  300     4.36 C   0.00  300
| MIN.      0.00   0.00  301    -17.08  10.00  300
|           0.00  10.00  301      0.00  10.00  301     0.47 C  10.00  301
|-----------------------------------------------------------------------------

********** END OF FORCE ENVELOPE FROM INTERNAL STORAGE **********


 70. ***
 71. FINISH


         *********** END OF THE STAAD.Pro RUN ***********

           **** DATE= MAR  5,2015   TIME= 16:14:24 ****

     ************************************************************
     *   For technical assistance on STAAD.Pro, please visit    *
     *   http://selectservices.bentley.com/en-US/               *
     *                                                          *
     *   Details about additional assistance from               *
     *   Bentley and Partners can be found at program menu      *
     *   Help->Technical Support                                *
     *                                                          *
     *      Copyright (c) 1997-2014 Bentley Systems, Inc.
     *                http://www.bentley.com                    *
     ************************************************************
```

Software licensed to	Job No C22283-LO2	Sheet No 1	Rev
	Part		
Job Title	Ref		
	By BK	Date 15-Mar-15	Chd
Client	File 20x11.16-3sided.Fixed.st(	Date/Time 05-Mar-2015 16:11	

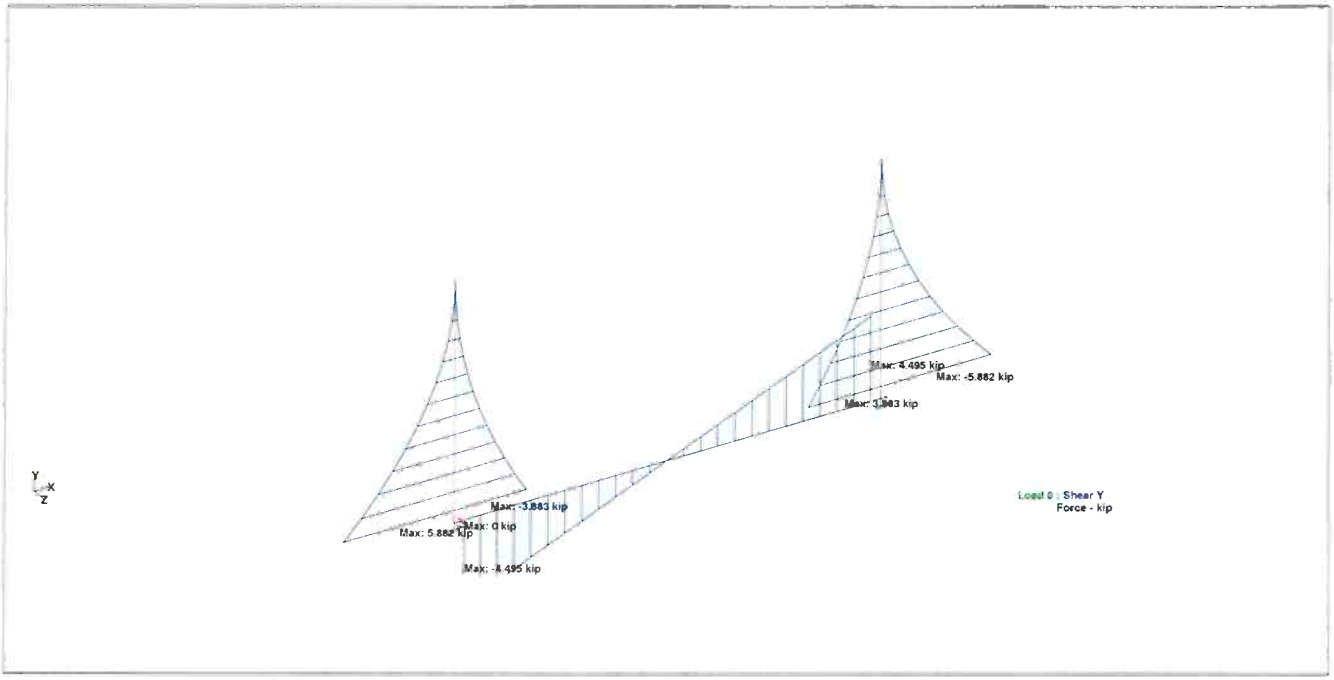

Whole Structure Fy 1.08kip:1ft 0 Envelope

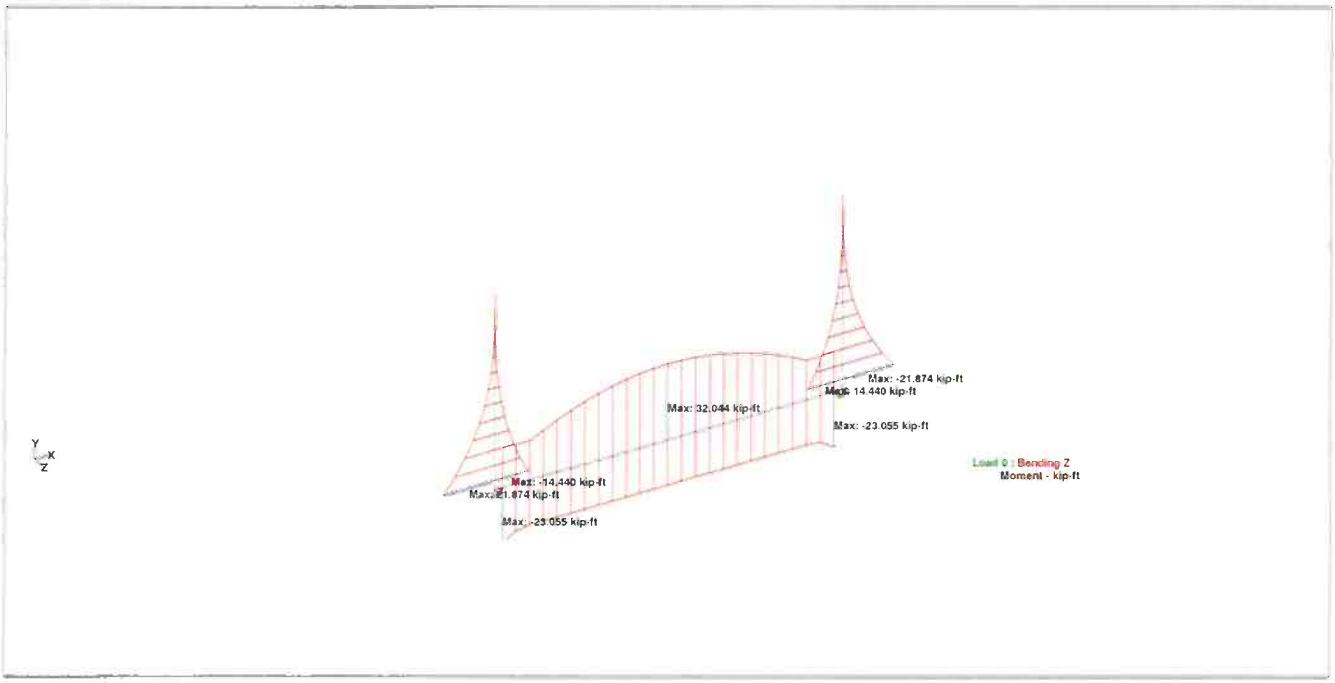

Whole Structure Mz 7kip-ft:1ft 0 Envelope

Section 5
CSI LRFD Wing wall 1
Calculations

Concrete Systems Inc.
9 Commercial St., Hudson, NH,03051
Phone 603-889-4163
Fax 603-889-2417

AASHTO LRFD WINGWALL CALCULATIONS

PROJECT NUMBER: C22283
PROJECT NAME: PROPOSED BRIDGE: VT ROUTE 58 BRIDGE #7 IRASBURG, VT
DATE: Apr 3, 2015
BY: CV

WW 1

INPUT PARAMETERS:

Wall geometry

Panel Height (high) = 14.33 ft
Panel Height (low) = 9.66 ft
Wall Panel Length = 8.50 ft
Entire Wall length = 8.50 ft
Length of flat = 1.00 ft
wall thickness = 12
Wingwall Drop *(high-low)* = 4.67 ft
Wall slope = 0.6227
Max fill ht. *(t/road to b/ww)* = 15.00 ft
Fill Slope *(perp. to road)* = 2.0
Wall angle *(perp. to road)* = 45
Fill slope *(perp. to wall)* = 2.83
Wingwall Panel Connected to Bridge Unit= ☑ Yes

Soil properties

γ_{soil} = 140 pcf
γ_{conc} = 150 pcf
$\gamma_{LLsurcharge}$ = 120 pcf
ϕ_{AB} = 32
θ_{AB} = 0
δ_{AB} = 24
ϕ_{BC} = 32
θ_{BC} = 30
δ_{BC} = 16

Foundation

D_{ftg} = 3.0 ft
B_{ftg} = 2.5 ft
o = 9 in
Q_{soil} = 3.0 KSF

Railing or barrier

NONE
T/WW to load = 2.00 ft
impact load = 10.00 K

	Distance to anchor	Overriding perp. slope @ anchor	Wall height @ anchor	Contrib. width	Perp. slope used @ anchor	h_{eq} LL surch	Anchor Type	Check 'e' & Bearing
Anchor #1	2.50 ft	n	11.22 ft	4.50 ft	2.96 ft	0.00 ft	F	OK
Anchor #2	6.50 ft	n	13.71 ft	3.00 ft	10.60 ft	0.00 ft	F	OK
Anchor #3	0.00 ft	n	0.00 ft	0.00 ft	2.83 ft	0.00 ft	F	N/A
Anchor #4	0.00 ft	n	0.00 ft	0.00 ft	2.83 ft	0.00 ft	A	N/A
Anchor #5	0.00 ft	n	0.00 ft	0.00 ft	2.83 ft	0.00 ft	A	N/A

CALCULATION NOTES:

1. Wingwall calculations are done in accordance with the current edition of the *AASHTO LRFD Bridge Design Specifications* .
2. Moments are summed about the *toe (face) of the wingwall* (point "o" on attached "Pressure Diagram").
3. K_a is calculated using equation found in former AASHTO LRFD Specifications Equation 3.11.5.3-1

K_a =

4. Only 80% of the soil unit weight is used for the eccentricity/ stability calculation. This is a conservative assumption as explained in the full HITEC report "Evaluation of the CON/SPAN® Wingwall System"
5. The full 100% of the soil unit weight is used for the bearing calculations.
6. These calculations conservatively assume that the wall anchor has the same unit weight as soil.
7. The wingwall angle (in plan view) is measured from perpendicular to roadway.
8. Barrier loads are distributed per AASHTO LRFD Specifications Section 13

Anchor 1			
SOIL PROPERTY	**DESCRIPTION**	**VALUE section AB**	**VALUE section BC**
ϕ	friction angle of soil	32	32
θ	angle of wall to the y-axis	0	30
δ	wall-soil friction angle *(measured from a perpendicular with the wall)* =0, if significant vibrations of backfill or modules settling more than backfill. = 0.5*ϕ, if modules are uniform width. = 0.75*ϕ, if averaged pressure surface	24	16
x	side slopes from road (x:1)	2.0	
α	wingwall angle (angle w/ perpendicular to road)	45	
	slope of backfill (perpendicular to wall)	2.96	
β	angle of backfill (perpendicular to wall)	18.6	18.6
	$(K_a)_{AB}$ =	0.36	$(K_a)_{BC}$ = 0.13

Anchor 1

VARIABLE	DESCRIPTION OF VARIABLE	VALUE	
H	wingwall design height at anchor location (feet)	11.22	
h_{surch}	height of live load surcharge (feet)	0.00	
t	thickness of wingwall (inches)	12	
δ	wall friction angle for section AB	24	
β	angle of backfill (degrees)	18.6	
L	length of anchor (feet)	8.04	F
γ_s	unit weight of backfill (kcf)	140	
γ_c	unit weight of concrete (kcf)	150	
γ_{surch}	unit weight of surcharge (kcf)	120	*(per AASHTO LRFD 3.11.6.4)*

Description	Vertical Reaction (k/ft)	Horizontal Reaction (k/ft)	Lever Arm (ft)	Disturbing Moment (ft-k/ft)	"Stability" Resisting Moment (ft-k/ft)	"Bearing" Resisting Moment (ft-k/ft)
wall (W_w)	1.68		0.50		0.84	0.84
soil I_A	1.53		6.36		7.77	9.71
soil I_B	8.69		5.02		34.88	43.60
soil II_A	2.57		3.63		7.46	9.33
soil II_B	0.68		7.02		3.84	4.80
$W_{surcharge(vert)}$	0.00		5.02		0.00	0.00
$W_{parapet}$	0.00		0.50		0.00	0.00
Soil Pressure						
$(P_{AB})_v$	1.13		9.04		10.19	10.19
$(P_{AB})_h$		2.53	6.98	17.66		
$(P_{BC1})_v$	-0.21		7.89		-1.69	-1.69
$(P_{BC1})_h$		0.86	1.50	1.29		
$(P_{BC2})_v$	-0.04		7.50		-0.31	-0.31
$(P_{BC2})_h$		0.17	0.83	0.14		
$P_{surcharch(hor)}$		0.00	6.96	0.00		
TOTALS =	16.02	3.56		19.09	62.98	76.47

AASHTO LRFD C11.6.3.3 states: The specified criteria for the location of the resultant, coupled with investigation of the bearing pressure, replaces the investigation of the ratio of stabilizing moment to overturning moment. See Section III Soil Bearing Pressure.

Anchor 2			
SOIL PROPERTY	**DESCRIPTION**	**VALUE section AB**	**VALUE section BC**
ϕ	friction angle of soil	32	32
θ	angle of wall to the y-axis	0	30
δ	wall-soil friction angle *(measured from a perpendicular with the wall)* =0, if significant vibrations of backfill or mod settling more than backfill. = 0.5*ϕ, if modules are uniform width. = 0.75*ϕ, if averaged pressure surface	24	16
x	side slopes from road (x:1)	2.0	
α	wingwall angle (angle w/ perpendicular to road)	45	
	slope of backfill (perpendicular to wall)	10.60	
β	angle of backfill (perpendicular to wall)	5.4	18.6
	$(K_a)_{AB}$ =	0.29	$(K_a)_{BC}$ = 0.11

Anchor 2

VARIABLE	DESCRIPTION OF VARIABLE	VALUE	
H	wingwall design height at anchor location (feet)	13.71	
h_{surch}	height of live load surcharge (feet)	0.00	
t	thickness of wingwall (inches)	12	
δ	wall friction angle for section AB	24	
β	angle of backfill (degrees)	5.4	
L	length of anchor (feet)	8.04	F
γ_s	unit weight of backfill (kcf)	140	
γ_c	unit weight of concrete (kcf)	150	
γ_{surch}	unit weight of surcharge (kcf)	120	*(per AASHTO LRFD 3.11.6.4)*

Description	Vertical Reaction (k/ft)	Horizontal Reaction (k/ft)	Lever Arm (ft)	Disturbing Moment (ft-k/ft)	"Stability" Resisting Moment (ft-k/ft)	"Bearing" Resisting Moment (ft-k/ft)
wall (W_w)	2.06		0.50		1.03	1.03
soil I_A	0.43		6.36		2.17	2.71
soil I_B	11.49		5.02		46.14	57.68
soil II_A	2.57		3.63		7.46	9.33
soil II_B	0.68		7.02		3.84	4.80
$W_{surcharge}$	0.00		5.02		0.00	0.00
$W_{parapet}$	0.00		0.50		0.00	0.00
Soil Pressure						
$(P_{AB})_v$	1.00		9.04		9.07	9.07
$(P_{AB})_h$		2.25	7.16	16.12		
$(P_{BC1})_v$	-0.19		7.88		-1.51	-1.51
$(P_{BC1})_h$		0.77	1.50	1.15		
$(P_{BC2})_v$	-0.03		7.88		-0.27	-0.27
$(P_{BC2})_h$		0.14	0.83	0.12		
P_{surch}		0.00	7.23	0.00		
TOTALS =	18.01	3.16		17.39	67.93	82.83

AASHTO LRFD C11.6.3.3 states: The specified criteria for the location of the resultant, coupled with investigation of the bearing pressure, replaces the investigation of the ratio of stabilizing moment to overturning moment. See Section III Soil Bearing Pressure.

II. CHECK OVERTURNING STABILITY AT CONNECTION PLATES

The connection plates provide stability for the portion of the wall not supported by the anchors, i.e., the section closest to the culvert. (See wingwall sketch)

Data:

number of plates = 2
ϕ = 32
δ = 24
γ_s = 0.140 kcf
$\gamma_{(surcharge)}$ = 0.120 kcf
wall height @ plates (H) = **14.33 ft**
Live load surcharge (h) = **0.00 ft**
section width for plates (S) = 1.0 ft
y_{Psh} = H/3 = 4.8 ft
y_{PLL} = H/2 = 7.2 ft
y_{p1} = **0.75 ft**
y_{p2} = **10.75 ft**
A_{bolt} = 0.79
t_{plate} = 1.00 in
$\phi F_{(bolt)}$ = 30 ksi
$F_{y(plate)}$ = 36 ksi

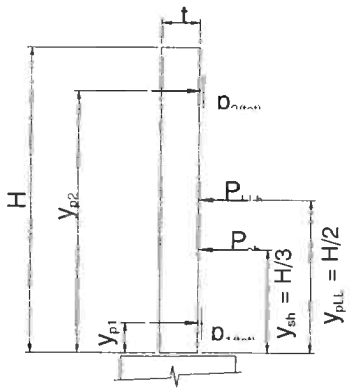

Find soil pressure on section:

Because the wall is more rigid at the plates, at-rest soil pressure coefficient (K_o) is used.

K_o = 1-sin ϕ = 0.47 *(AASHTO LRFD eq. 3.11.5.2-1)*

$P_{sh} = (^1/_2)\gamma_s K_o H^2(S)(\cos\delta)$ = 6.17 K

$P_{LLh} = K_o\gamma_s HhS(\cos\delta)$ = 0.00 K

$P_{impact} = P_{imp}S/L_{distr}$ = 0

Find reaction at plate:

Sum moments about bottom plate, p_1

$\Sigma M_{p1} = 0 = P_{sh}(y_{Psh} - y_{p1}) - p_2(y_{p2} - y_{p1})$ *(dead load)*

$\Sigma M_{p1} = 0 = P_{LL}(y_{PLL} - y_{p1}) - p_{2LL}(y_{p2} - y_{p1}) + P_{imp}(y_{imp} - y_{p1})$ *(live load)*

$p_2 = \dfrac{P_{sh}(y_{Psh} - y_{p1})}{(y_{p2} - y_{p1})}$ = 2.49 K $\qquad p_1 = P_{sh} - p_2$ = 3.69 K

$p_{2LL} = \dfrac{P_{LLh}(y_{pLL} - y_{p1}) + P_{imp}(y_{imp} - y_{p1})}{(y_{p2} - y_{p1})}$ = 0.00 K $\qquad p_{1LL} = P_{LL} + P_{imp} - p_{2LL}$ = 0.00 K

Find factored reaction:

Load factors are per AASHTO LRFD 3.4.1-1 & Table 3.4.1-2

$p_{fac} = \gamma p_{max(DL)} + (1.75)p_{max(LL)}$

$p_{fac} = (1.35)p_{(DL)} + (1.75)p_{(LL)}$

$p_{1(tot,\ factored)}$ = 4.98 K ***Controls***

$p_{2(tot,\ factored)}$ = 3.36 K

$p_{(max,\ factored)}$ = 4.98 K

Check bolts:

The special Richmond Screw Anchor *"wingwall insert" pullout capacity was obtained from the manufacturer and has approx. 3:1 safety factor.*

Pullout capacity = 16.5 k/bolt ***Controls***

Bolt tension = $\phi F A_{bolt}$ = 23.7 k/bolt

F.S. = $\dfrac{\text{Capacity* 2 bolts}}{(p_{fac})}$ = 6.63 *> 1.0, OK*

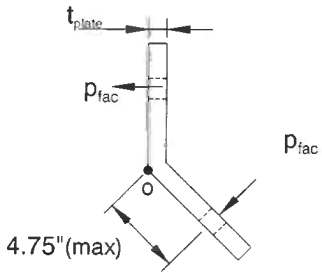

Check bending of plate:

Sum moments about corner of plate, point "o"

$\Sigma M_o = (p_{fac})(4.75")$ = 23645 lb-in

$I_{pl} = bh^3/12$ = 0.83 in^4

$\sigma_{max} = \dfrac{My}{I_{pl}}$ = 14 ksi $< \phi F_y = 0.9F_y$ *OK*

(AISC LRFD-F2 states ϕ_b = 0.9)

length of connection plate is 10"

III. CHECK SOIL BEARING PRESSURE AND SLIDING UNDER FOOTING

The reaction will be supported on the horizontal portion of the anchor plus the footing.

R_v = Total vertical reaction at anchor (using 100% of soil weight).
R_h = Total horizontal reaction at anchor.
M_D = Disturbing moment at anchor.
M_{Rb} = Resisting moment due to 100% of soil at anchor.

Summary of loads at anchors

anchor	anchor base length	R_v ($^K/_F$)	R_h ($^K/_F$)	M_D ($^{K\text{-}F}/_F$)	M_{Rb} ($^{K\text{-}F}/_F$)
1	5.73	16.02	3.56	19.09	76.47
2	5.73	18.01	3.16	17.39	82.83
3	5.73	0.00	0.00	0.00	0.00
4	1.73	0.00	0.00	0.00	0.00
5	1.73	0.00	0.00	0.00	0.00

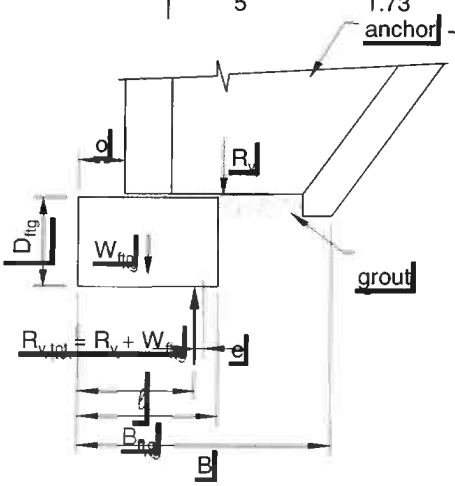

Check the bearing pressure under the wall

D_{ftg} = 3.0 ft
B_{ftg} = 2.5 ft
o = 9 in
W_{ftg} = 1.13 klf

Q_{allow} = 3.0 KSF

$R_{v,tot}$ = total vertical reaction ($R_v + W_{ftg}$)
B = bearing width
= maximum of (anchor base length + o) or B_{ftg}
ℓ = location of vertical resultant ($R_{v,tot}$) along bearing width

$$= \frac{R_v((M_{Rb}-M_D)/R_v + o) + W_{ftg}(B/2)}{R_{v,tot}}$$

e = eccentricity of resultant
= B/2 - ℓ
B' = adjusted bearing width
= B - 2e
q = bearing pressure *(must be less than Q_{allow})*
= $R_{v,tot}$ / B'

Check bearing pressure at each anchor

anchor	B (ft)	ℓ (ft)	e	check e	B' (ft)	q	check q
1	7.48	4.13	-0.39	*OK*	6.70	2.56	*OK*
2	7.48	4.20	-0.46	*OK*	6.56	2.92	*OK*
3	0.00	0.00	0.00	*n/a*	0.00	0.00	*n/a*
4	0.00	0.00	0.00	*n/a*	0.00	0.00	*n/a*
5	0.00	0.00	0.00	*n/a*	0.00	0.00	*n/a*

Check the sliding factor of safety

$R_R = \phi * R_{V,tot} * .8 * \tan \phi$ *(AASHTO LRFD 10.6.3.4)*

(must be >R_h)

ϕ = 0.9 *from AASHTO LRFD Table 10.5.5.2.2-1 for precast concrete on sand*

Check sliding at each anchor

anchor	$R_{v,tot}$ (k/f)	R_R (k/f)	R_h	check $R_R > R_h$
1	17.15	7.72	3.56	*OK*
2	19.13	8.61	3.16	*OK*
3	0.00	0.00	0.02	*n/a*
4	0.00	0.00	0.01	*n/a*
5	0.00	0.00	0.01	*n/a*

IV. CHECK BENDING OF FOOTING CROSS SECTION

Bending need not be considered in footings when the footing depth, D, exceeds the projection, pr, of the footing beyond the edge of the wall.

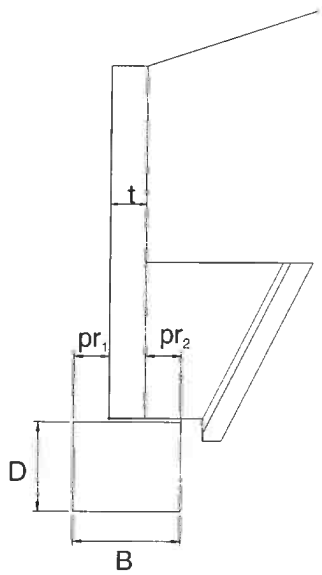

pr_1 = offset(o) = 9 in

pr_2 = B - o - t = 9 in **Controls**

pr_{max} = 9 in

projection < D *OK*

Use minimal steel stirrups
#4 @ 48 inches o.c.

V. CHECK WALL SECTION - BENDING AND SHEAR (vertical bars)

Assumptions: 1. *Wall stem is cantilevered from anchor.*
2. *Use active earth pressure because wall can deflect at top.*
3. *Use K_a and δ from Anchor Stability Calculations.*

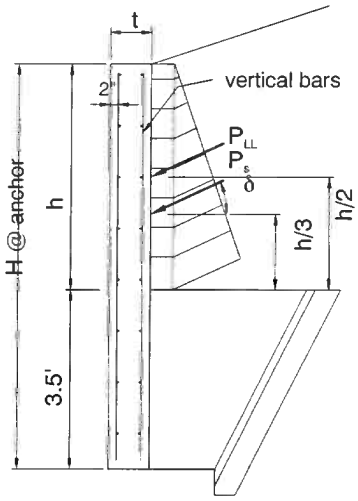

Horizontal loads:

$P_{sh} = (^1/_2)\gamma_s K_a h^2(\cos\delta)$

$P_{LLh} = \gamma_s K_a h(h_{surcharge})(\cos\delta)$

$P_{impact} = P_{imp}/L_{distr}$

Factored forces:

Load factors are per AASHTO LRFD 3.4.1-1 & Table 3.4.1-2

M_u = Section width$[(1.35)P_{sh}(h/3) + (1.75)P_{LLh}(h/2) + (1.75)P_{imp}(h+y_{imp})]$

V_u = Section width$[(1.35)P_{sh} + (1.75P_{LLh} + (1.75P_{imp}]$

Summary of forces at anchors

anchor	H (ft)	h (ft)	$h_{surcharge}$ (ft)	P_{sh} (k/ft)	P_{LLh} (k/ft)	P_{imp} (k/ft)	M_u (k-ft)	V_u (k)
1	11.22	7.72	0.00	1.39	0.00	0.00	21.66	8.42
2	13.71	10.21	0.00	1.95	0.00	0.00	26.91	7.91
3	0.00	0.00	0.00	0.00	0.00	0.00	0.00	0.00
4	0.00	0.00	0.00	0.00	0.00	0.00	0.00	0.00
5	0.00	0.00	0.00	0.00	0.00	0.00	0.00	0.00

Check bending (reinforcment) at anchors

f'_c = **5000 psi**

f_y = **60000 psi**

ϕ_b = **0.9** *(AASHTO LRFD 5.4.2.1)*

$m = f_y/0.85f'_c$ = 14.12

d = 9.50 in

b = anchor's contrib. width

$$R_u = \frac{M_u}{\phi_b b d^2}$$

$$\rho_{reqd} = \frac{1}{m}\left(1-\sqrt{1-\frac{2mR_u}{f_y}}\right)$$

ρ_{min} = *AASHTO LRFD 5.7.3.3.2 states the minimum reinforcement is the lesser of 1.2Mcr OR 1.33 times the factored moment required by strength.*

anchor	R_u (psi)	ρ_{reqd}	ρ_{cr}	ρ_{min}	$A_{s\,min}$ (in^2)	$A_{s\,actual}$ (in^2)	check
1	59	0.0010	0.0032	0.0013	0.66	6.87	OK
2	110	0.0019	0.0032	0.0024	0.83	6.67	OK
3	0	0.0000	0.0032	0.0000	0.00	#VALUE!	N/A
4	0	0.0000	0.0032	0.0000	0.00	#VALUE!	N/A
5	0	0.0000	0.0032	0.0000	0.00	#VALUE!	N/A

Check shear

$V_c = (.0316)*\beta \sqrt{f'_c}\, b_v d_v$ *(V_c calculated by AASHTO LRFD eq'n 5.8.3.3-3)*

$\phi = 0.9$ *(AASHTO LRFD 5.5.4.2.1)*

$\beta = 2$ *(AASHTO LRFD 5.8.3.4.1)*

$d_v = .9*d$ or $.72*h$ *whichever is greater (AASHTO LRFD 5.8.2.9)*

anchor	ϕV_c	check $V_u < \phi V_c$
1	59.34	OK
2	39.56	OK
3	0.00	N/A
4	0.00	N/A
5	0.00	N/A

VI. CHECK TYPE 'F' ANCHOR ATTACHMENT

Check capacity of connector for pullout (truncated pyramid failure), shear, tension, and combined shear & tension

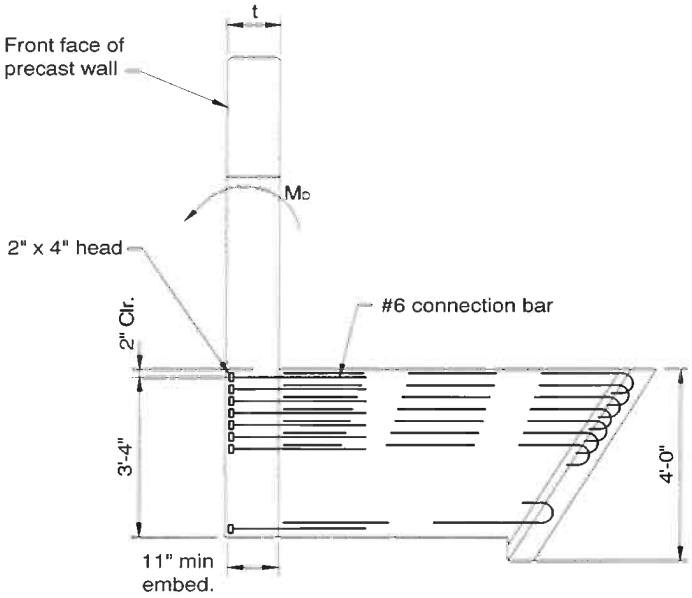

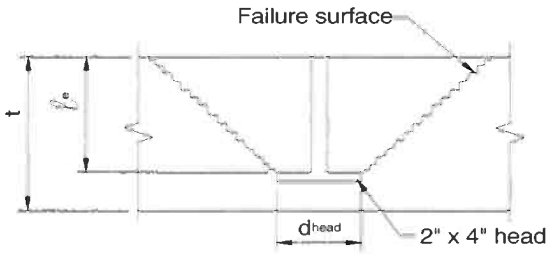

embedment depth (h_e) = **11 in**

Attachment depth = 42 in

X head dimension (Xd_{head}) = 3 in

Y head dimension (Yd_{head}) = 3 in

Bar size = **# 6**

rows = **7**

row spacing = **3 in**

wall thickness (t) = 12 in

x = Xd_{head} (*since only 1 column*) = 3 in

y = (#rows-1)(row spacing) + Yd_{head} = 21 in

z = min(x,y) = 3 in

h_{min} = (z + z_e)/2 = 12.5 in

A_R = (x+2 h_e-2d)(y+2 h_e-2d) = 19.0 in^2

f'_c = **4000 psi**

f_y = **60000 psi**

$\phi_{concrete}$ = 0.85

ϕ_{steel} = 0.90

TENSION CAPACITY (Per PCI Design Handbook §6.5.2.1)

t < hmin: failure surface penetrates slab

Find pullout capacity of concrete

if t >= h_{min}, $\phi P_c = \phi 2.67 sqrt(f'c)(x+2 h_e)(y+2 h_e)$

if t < h_{min}, $\phi P_c = \phi 2.67 sqrt(f'c)[(x+2 h_e)(y+2 h_e) - A_R]$

ϕP_c = 151.57 K

Find tension capacity of studs

$\phi P_y = \phi f_y(A_{bar})(\#bars)$

ϕP_y = 167.00 K

controlling tension capacity (ϕP) = 151.57 K

Find moment capacity of anchor

Moment capacity of anchor (ϕM_n) = $\phi P(d-a/2)$

d = attachment depth - bar cover - $(y-Yd_{head})/2$ = 31 in

a = $A_s f_y/0.85 f'_c b$ = 9.10 in

ϕM_n = 334.12 k-f

SHEAR CAPACITY (Per PCI Design Handbook §6.5.2.2)

Find shear capacity of concrete

$\phi V_c = \phi V'_c C_w C_t C_c$

$\phi V'_c = \phi 12.5 d_e^{1.5} \text{sqrt}(f'_c)$	= 167.6 K
$C_w = 1 + \text{spacing}/3.5d_e < \#\text{columns}$	= 1.0
$C_t = t/1.3d_e <= 1.0$	= 0.23
$C_c = 0.4 + 0.7d_c/de <= 1.0$	= 0.9
d_e = attachment depth - cover - bar dia/2	= 40 in
d_c = distance to side of wingwall	= 30 in

$\phi V_c = \phi V'_c C_w C_t C_c =$ 36.31 K

Find shear capacity of studs

$\phi V_y = \phi 0.9 f_y A_{bar}(\#\text{bars})$

$\phi V_y =$ 150.30 K

controlling shear capacity (ϕV) = 36.31 K

FIND LOADS

Unfactored loads on anchors:

$M_{D(DL)}$ = (sec width)$M_{D(anchor)}$

$M_{D(LL)}$ = (sec width)($M_{D(anchor)}$ + P_{imp}*(wall ht + y_{imp}))

Factored loads:

Load factors are per AASHTO 3.22.1 & Table 3.22.1A

$M_u = (1.3)(1.3)M_{D(DL)} + (1.3)(1.67)M_{D(LL)}$

$P_u = M_u$ /(d-a/2)*cos(bar angle)

$V_u = M_u$ /(d-a/2)*sin(bar angle)

bar angle = 0°

Summary of forces

anchor	$M_{D(DL)}$ ft-k	$M_{D(LL)}$ ft-k	M_u ft-k	P_u k	V_u k
1	85.9	0.0	145.2	65.9	0.0
2	52.2	0.0	88.2	40.0	0.0
3	0.0	0.0	0.0	0.0	0.0
4	0.0	0.0	0.0	0.0	0.0
5	0.0	0.0	0.0	0.0	0.0

Summary of results

anchor	check $\phi M_n > M_u$	check $\phi P > P_u$	check $\phi V > V_u$	check combined V_c & P_c	check combined V_s & P_s
1	*OK*	*OK*	*OK*	*OK*	*OK*
2	*OK*	*OK*	*OK*	*OK*	*OK*
3	*OK*	*OK*	*OK*	*OK*	*OK*
4	*n/a*	*n/a*	*n/a*	*n/a*	*n/a*
5	*n/a*	*n/a*	*n/a*	*n/a*	*n/a*

NOTE:

ULTIMATE PULLOUT CAPACITY 33,000 POUNDS IN 3,000 PSI CONCRETE.

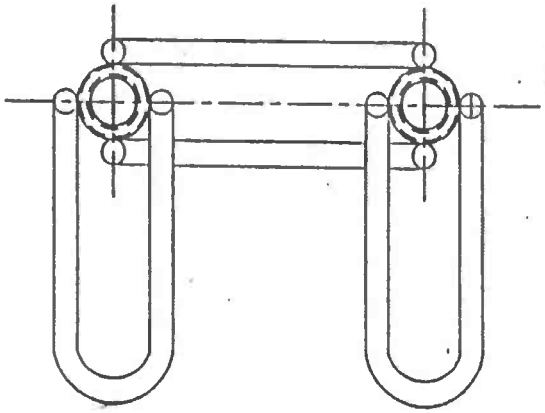

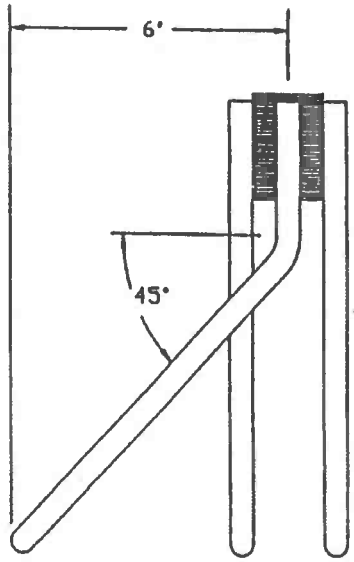

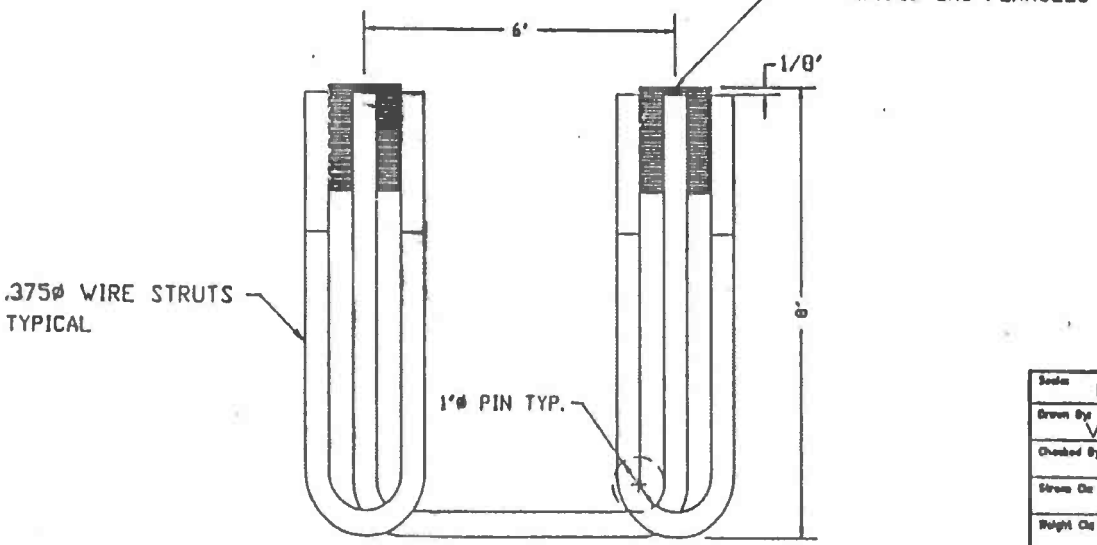

Scale NONE	Date	RICHMOND Screw Anchor Co. 7214 Burns Street Fort Worth, TX 76118
Drawn By VADIM	2/7/90	
Checked By		1"ø TWO BOLT WINGWALL PRESET ANCHOR
Stress Cir		
Weight Cir		
Approved		Product Symbol / Drawing No. D-694 / Rel. Date
Customer		

Section 6
CSI LRFD Wing wall 2
Calculations

Concrete Systems Inc.
9 Commercial St., Hudson, NH,03051
Phone 603-889-4163
Fax 603-889-2417

AASHTO LRFD WINGWALL CALCULATIONS

PROJECT NUMBER: C22283 WW 2
PROJECT NAME: PROPOSED BRIDGE: VT ROUTE 58 BRIDGE #7 IRASBURG, VT
DATE: Apr 3, 2015
BY: CV

INPUT PARAMETERS:

Wall geometry

Panel Height (high) = 14.33 ft
Panel Height (low) = 9.16 ft
Wall Panel Length = 9.00 ft
Entire Wall length = 9.00 ft
Length of flat = 1.00 ft
wall thickness = 12
Wingwall Drop *(high-low)* = 5.17 ft
Wall slope = 0.6463
Max fill ht. *(t/road to b/ww)* = 15.00 ft
Fill Slope *(perp. to road)* = 2.0
Wall angle *(perp. to road)* = 45
Fill slope *(perp. to wall)* = 2.83
Wingwall Panel Connected to Bridge Unit= ☑ Yes

Soil properties

γ_{soil} = 140 pcf
γ_{conc} = 150 pcf
$\gamma_{LLsurcharge}$ = 120 pcf
ϕ_{AB} = 32
θ_{AB} = 0
δ_{AB} = 24
ϕ_{BC} = 32
θ_{BC} = 30
δ_{BC} = 16

Foundation

D_{ftg} = 3.0 ft
B_{ftg} = 2.5 ft
o = 9 in
Q_{soil} = 3.0 KSF

Railing or barrier

NONE
T/WW to load = 2.00 ft
impact load = 10.00 K

	Distance to anchor	Overriding perp. slope @ anchor	Wall height @ anchor	Contrib. width	Perp. slope used @ anchor	h_{eq} LL surch	Anchor Type	Check 'e' & Bearing
Anchor #1	2.50 ft	n	10.78 ft	4.50 ft	2.83 ft	0.00 ft	F	OK
Anchor #2	6.50 ft	n	13.36 ft	3.25 ft	8.15 ft	0.00 ft	F	OK
Anchor #3	0.00 ft	n	0.00 ft	0.00 ft	2.83 ft	0.00 ft	A	N/A
Anchor #4	0.00 ft	n	0.00 ft	0.00 ft	2.83 ft	0.00 ft	A	N/A
Anchor #5	0.00 ft	n	0.00 ft	0.00 ft	2.83 ft	0.00 ft	A	N/A

CALCULATION NOTES:

1. Wingwall calculations are done in accordance with the current edition of the *AASHTO LRFD Bridge Design Specifications* .
2. Moments are summed about the *toe (face) of the wingwall* (point "o" on attached "Pressure Diagram").
3. K_a is calculated using equation found in former AASHTO LRFD Specifications Equation 3.11.5.3-1

$K_a =$

4. Only 80% of the soil unit weight is used for the eccentricity/ stability calculation. This is a conservative assumption as explained in the full HITEC report "Evaluation of the CON/SPAN® Wingwall System"
5. The full 100% of the soil unit weight is used for the bearing calculations.
6. These calculations conservatively assume that the wall anchor has the same unit weight as soil.
7. The wingwall angle (in plan view) is measured from perpendicular to roadway.
8. Barrier loads are distributed per AASHTO LRFD Specifications Section 13

Anchor 1			
SOIL PROPERTY	**DESCRIPTION**	**VALUE section AB**	**VALUE section BC**
ϕ	friction angle of soil	32	32
θ	angle of wall to the y-axis	0	30
δ	wall-soil friction angle *(measured from a perpendicular with the wall)* =0, if significant vibrations of backfill or modules settling more than backfill. = 0.5*ϕ, if modules are uniform width. = 0.75*ϕ, if averaged pressure surface	24	16
x	side slopes from road (x:1)	2.0	
α	wingwall angle (angle w/ perpendicular to road)	45	
	slope of backfill (perpendicular to wall)	2.83	
β	angle of backfill (perpendicular to wall)	19.5	19.5
	$(K_a)_{AB}$ =	0.37	$(K_a)_{BC}$ = 0.13

Anchor 1

VARIABLE	DESCRIPTION OF VARIABLE	VALUE	
H	wingwall design height at anchor location (feet)	10.78	
h_{surch}	height of live load surcharge (feet)	0.00	
t	thickness of wingwall (inches)	12	
δ	wall friction angle for section AB	24	
β	angle of backfill (degrees)	19.5	
L	length of anchor (feet)	8.04	F
γ_s	unit weight of backfill (kcf)	140	
γ_c	unit weight of concrete (kcf)	150	
γ_{surch}	unit weight of surcharge (kcf)	120	*(per AASHTO LRFD 3.11.6.4)*

Description	Vertical Reaction (k/ft)	Horizontal Reaction (k/ft)	Lever Arm (ft)	Disturbing Moment (ft-k/ft)	"Stability" Resisting Moment (ft-k/ft)	"Bearing" Resisting Moment (ft-k/ft)
wall (W_w)	1.62		0.50		0.81	0.81
soil I_A	1.60		6.36		8.14	10.17
soil I_B	8.19		5.02		32.89	41.11
soil II_A	2.57		3.63		7.46	9.33
soil II_B	0.68		7.02		3.84	4.80
$W_{surcharge(vert)}$	0.00		5.02		0.00	0.00
$W_{parapet}$	0.00		0.50		0.00	0.00
Soil Pressure						
$(P_{AB})_v$	1.08		9.04		9.77	9.77
$(P_{AB})_h$		2.43	6.87	16.69		
$(P_{BC1})_v$	-0.21		7.89		-1.67	-1.67
$(P_{BC1})_h$		0.85	1.50	1.27		
$(P_{BC2})_v$	-0.04		7.50		-0.31	-0.31
$(P_{BC2})_h$		0.17	0.83	0.14		
$P_{surcharch(hor)}$		0.00	6.81	0.00		
TOTALS =	15.49	3.44		18.10	60.93	74.01

AASHTO LRFD C11.6.3.3 states: The specified criteria for the location of the resultant, coupled with investigation of the bearing pressure, replaces the investigation of the ratio of stabilizing moment to overturning moment. See Section III Soil Bearing Pressure.

Anchor 2			
SOIL PROPERTY	**DESCRIPTION**	**VALUE section AB**	**VALUE section BC**
ϕ	friction angle of soil	32	32
θ	angle of wall to the y-axis	0	30
δ	wall-soil friction angle *(measured from a perpendicular with the wall)* =0, if significant vibrations of backfill or moc settling more than backfill. = 0.5*ϕ, if modules are uniform width. = 0.75*ϕ, if averaged pressure surface	24	16
x	side slopes from road (x:1)	2.0	
α	wingwall angle (angle w/ perpendicular to road)	45	
	slope of backfill (perpendicular to wall)	8.15	
β	angle of backfill (perpendicular to wall)	7.0	19.5
	$(K_a)_{AB}$ =	0.30	$(K_a)_{BC}$ = 0.11

Anchor 2

VARIABLE	DESCRIPTION OF VARIABLE	VALUE	
H	wingwall design height at anchor location (feet)	13.36	
h_{surch}	height of live load surcharge (feet)	0.00	
t	thickness of wingwall (inches)	12	
δ	wall friction angle for section AB	24	
β	angle of backfill (degrees)	7.0	
L	length of anchor (feet)	8.04	F
γ_s	unit weight of backfill (kcf)	140	
γ_c	unit weight of concrete (kcf)	150	
γ_{surch}	unit weight of surcharge (kcf)	120	*(per AASHTO LRFD 3.11.6.4)*

Description	Vertical Reaction (k/ft)	Horizontal Reaction (k/ft)	Lever Arm (ft)	Disturbing Moment (ft-k/ft)	"Stability" Resisting Moment (ft-k/ft)	"Bearing" Resisting Moment (ft-k/ft)
wall (W_w)	2.00		0.50		1.00	1.00
soil I_A	0.56		6.36		2.82	3.53
soil I_B	11.10		5.02		44.57	55.72
soil II_A	2.57		3.63		7.46	9.33
soil II_B	0.68		7.02		3.84	4.80
$W_{surcharge}$	0.00		5.02		0.00	0.00
$W_{parapet}$	0.00		0.50		0.00	0.00
Soil Pressure						
$(P_{AB})_v$	1.00		9.04		9.07	9.07
$(P_{AB})_h$		2.25	7.12	16.03		
$(P_{BC1})_v$	-0.19		7.88		-1.51	-1.51
$(P_{BC1})_h$		0.77	1.50	1.15		
$(P_{BC2})_v$	-0.04		7.88		-0.28	-0.28
$(P_{BC2})_h$		0.14	0.83	0.12		
P_{surch}		0.00	7.17	0.00		
TOTALS =	17.69	3.16		17.30	66.98	81.65

AASHTO LRFD C11.6.3.3 states: The specified criteria for the location of the resultant, coupled with investigation of the bearing pressure, replaces the investigation of the ratio of stabilizing moment to overturning moment. See Section III Soil Bearing Pressure.

II. CHECK OVERTURNING STABILITY AT CONNECTION PLATES

The connection plates provide stability for the portion of the wall not supported by the anchors, i.e., the section closest to the culvert. (See wingwall sketch)

Data:

number of plates = 2

ϕ = 32

δ = 24

γ_s = 0.140 kcf

$\gamma_{(surcharge)}$ = 0.120 kcf

wall height @ plates (H) = **14.33 ft**

Live load surcharge (h) = **0.00 ft**

section width for plates (S) = 1.3 ft

y_{Psh} = H/3 = 4.8 ft

y_{PLL} = H/2 = 7.2 ft

y_{p1} = **0.75 ft**

y_{p2} = **10.75 ft**

A_{bolt} = 0.79

t_{plate} = 1.00 in

$\phi F_{(bolt)}$ = 30 ksi

$F_{y(plate)}$ = 36 ksi

Find soil pressure on section:

Because the wall is more rigid at the plates, at-rest soil pressure coefficient (K_o) is used.

$K_o = 1\text{-}\sin\phi = 0.47$ *(AASHTO LRFD eq. 3.11.5.2-1)*

$P_{sh} = (^1/_2)\gamma_s K_o H^2(S)(\cos\delta) = 7.72$ K

$P_{LLh} = K_o\gamma_s HhS(\cos\delta) = 0.00$ K

$P_{impact} = P_{imp}S/L_{distr} = 0$

Find reaction at plate:

Sum moments about bottom plate, p ,

$\Sigma M_{p1} = 0 = P_{sh}(y_{Psh} - y_{p1}) - p_2(y_{p2} - y_{p1})$ *(dead load)*

$\Sigma M_{p1} = 0 = P_{LL}(y_{PLL} - y_{p1}) - p_{2LL}(y_{p2} - y_{p1}) + P_{imp}(y_{imp} - y_{p1})$ *(live load)*

$p_2 = \dfrac{P_{sh}(y_{Psh} - y_{p1})}{(y_{p2} - y_{p1})} = 3.11$ K $\qquad p_1 = P_{sh} - p_2 = 4.61$ K

$p_{2LL} = \dfrac{P_{LLh}(y_{pLL} - y_{p1}) + P_{imp}(y_{imp} - y_{p1})}{(y_{p2} - y_{p1})} = 0.00$ K $\qquad p_{1LL} = P_{LL} + P_{imp} - p_{2LL} = 0.00$ K

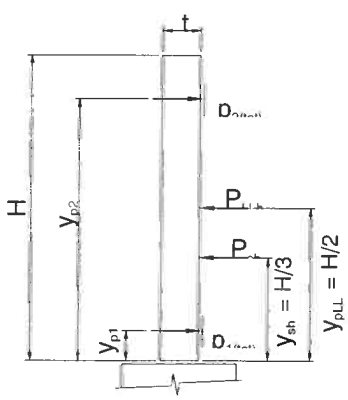

Find factored reaction:

Load factors are per AASHTO LRFD 3.4.1-1 & Table 3.4.1-2

$p_{fac} = \gamma p_{max(DL)} + (1.75)p_{max(LL)}$

$p_{fac} = (1.35)p_{(DL)} + (1.75)p_{(LL)}$

$p_{1(tot,\ factored)} = 6.22$ K ***Controls***

$p_{2(tot,\ factored)} = 4.19$ K

$p_{(max,\ factored)} = 6.22$ K

Check bolts:

The special Richmond Screw Anchor *"wingwall insert" pullout capacity was obtained from the manufacturer and has approx. 3:1 safety factor.*

Pullout capacity = 16.5 k/bolt ***Controls***

Bolt tension = $\phi F A_{bolt}$ = 23.7 k/bolt

$F.S. = \dfrac{\text{Capacity* 2 bolts}}{(p_{fac})} = 5.30$ *> 1.0, OK*

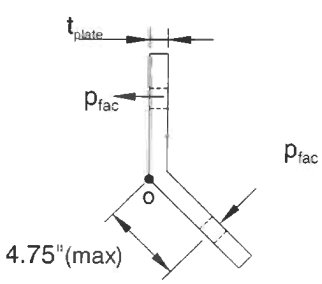

Check bending of plate:

Sum moments about corner of plate, point "o"

$\Sigma M_o = (p_{fac})(4.75") = 29556$ lb-in

$I_{pl} = bh^3/12 = 0.83$ in^4

$\sigma_{max} = \dfrac{My}{I_{pl}} = 18$ ksi $< \phi F_y = 0.9F_y$ *OK*

(AISC LRFD-F2 states ϕ_b = 0.9)

length of connection plate is 10"

III. CHECK SOIL BEARING PRESSURE AND SLIDING UNDER FOOTING

The reaction will be supported on the horizontal portion of the anchor plus the footing.

R_v = Total vertical reaction at anchor (using 100% of soil weight).
R_h = Total horizontal reaction at anchor.
M_D = Disturbing moment at anchor.
M_{Rb} = Resisting moment due to 100% of soil at anchor.

Summary of loads at anchors

anchor	anchor base length	R_v ($^K/_F$)	R_h ($^K/_F$)	M_D ($^{K\text{-}F}/_F$)	M_{Rb} ($^{K\text{-}F}/_F$)
1	5.73	15.49	3.44	18.10	74.01
2	5.73	17.69	3.16	17.30	81.65
3	1.73	0.00	0.00	0.00	0.00
4	1.73	0.00	0.00	0.00	0.00
5	1.73	0.00	0.00	0.00	0.00

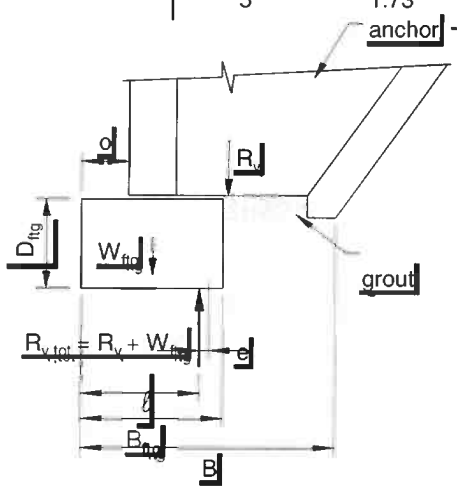

Check the bearing pressure under the wall

D_{ftg} = 3.0 ft
B_{ftg} = 2.5 ft
o = 9 in
W_{ftg} = 1.13 klf

Q_{allow} = 3.0 KSF

$R_{v,tot}$ = total vertical reaction ($R_v + W_{ftg}$)

B = bearing width
= maximum of (anchor base length + o) or B_{ftg}

ℓ = location of vertical resultant ($R_{v,tot}$) along bearing width

$$= \frac{R_v((M_{Rb}-M_D)/R_v + o) + W_{ftg}(B/2)}{R_{v,tot}}$$

e = eccentricity of resultant
= B/2 - ℓ

B' = adjusted bearing width
= B - 2e

q = bearing pressure *(must be less than Q_{allow})*
= $R_{v,tot}$ / B'

Check bearing pressure at each anchor

anchor	B (ft)	ℓ (ft)	e	check e	B' (ft)	q	check q
1	7.48	4.15	-0.41	OK	6.66	2.49	OK
2	7.48	4.20	-0.46	OK	6.56	2.87	OK
3	0.00	0.00	0.00	*n/a*	0.00	0.00	*n/a*
4	0.00	0.00	0.00	*n/a*	0.00	0.00	*n/a*
5	0.00	0.00	0.00	*n/a*	0.00	0.00	*n/a*

Check the sliding factor of safety

$H_R = \phi * R_{V,tot} * .8 * \tan \phi$ *(AASHTO LRFD 10.6.3.4)*

(must be >R_h)

ϕ = 0.9 *from AASHTO LRFD Table 10.5.5.2.2-1 for precast concrete on sand*

Check sliding at each anchor

anchor	$R_{v,tot}$ (k/f)	R_R (k/f)	R_h	check $R_R > R_h$
1	16.61	7.48	3.44	*OK*
2	18.82	8.47	3.16	*OK*
3	0.00	0.00	0.01	*n/a*
4	0.00	0.00	0.01	*n/a*
5	0.00	0.00	0.01	*n/a*

IV. CHECK BENDING OF FOOTING CROSS SECTION

Bending need not be considered in footings when the footing depth, D, exceeds the projection, pr, of the footing beyond the edge of the wall.

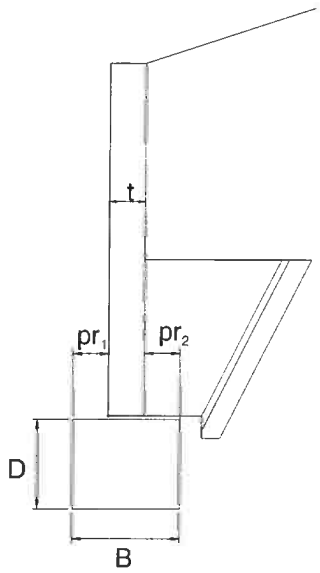

pr_1 = offset(o) = 9 in

pr_2 = B - o - t = 9 in **Controls**

pr_{max} = 9 in

projection < D *OK*

Use minimal steel stirrups
#4 @ 48 inches o.c.

V. CHECK WALL SECTION - BENDING AND SHEAR (vertical bars)

Assumptions: 1. *Wall stem is cantilevered from anchor.*
2. *Use active earth pressure because wall can deflect at top.*
3. *Use K_a and δ from Anchor Stability Calculations.*

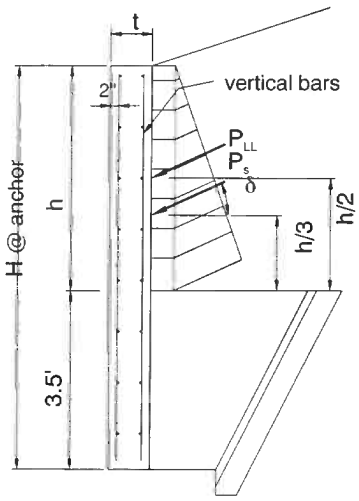

Horizontal loads:

$P_{sh} = (^1/_2)\gamma_s K_a h^2(\cos\delta)$

$P_{LLh} = \gamma_s K_a h(h_{surcharge})(\cos\delta)$

$P_{impact} = P_{imp}/L_{distr}$

Factored forces:

Load factors are per AASHTO LRFD 3.4.1-1 & Table 3.4.1-2

M_u = Section width$[(1.35)P_{sh}(h/3) + (1.75)P_{LLh}(h/2) + (1.75)P_{imp}(h+y_{imp})]$

V_u = Section width$[(1.35)P_{sh} + (1.75P_{LLh} + (1.75P_{imp}]$

Summary of forces at anchors

anchor	H (ft)	h (ft)	$h_{surcharge}$ (ft)	P_{sh} (k/ft)	P_{LLh} (k/ft)	P_{imp} (k/ft)	M_u (k-ft)	V_u (k)
1	10.78	7.28	0.00	1.26	0.00	0.00	18.50	7.63
2	13.36	9.86	0.00	1.86	0.00	0.00	26.84	8.17
3	0.00	0.00	0.00	0.00	0.00	0.00	0.00	0.00
4	0.00	0.00	0.00	0.00	0.00	0.00	0.00	0.00
5	0.00	0.00	0.00	0.00	0.00	0.00	0.00	0.00

Check bending (reinforcment) at anchors

f'_c = 5000 psi

f_y = 60000 psi

ϕ_b = 0.9 *(AASHTO LRFD 5.4.2.1)*

$m = f_y/0.85f'_c$ = 14.12

d = 9.50 in

b = anchor's contrib. width

$$R_u = \frac{M_u}{\phi_b b d^2}$$

$$\rho_{reqd} = \frac{1}{m}\left(1-\sqrt{1-\frac{2mR_u}{f_y}}\right)$$

ρ_{min} = *AASHTO LRFD 5.7.3.3.2 states the minimum reinforcement is the lesser of 1.2Mcr OR 1.33 times the factored moment required by strength.*

anchor	R_u (psi)	ρ_{reqd}	ρ_{cr}	ρ_{min}	$A_{s\,min}$ (in^2)	$A_{s\,actual}$ (in^2)	check
1	51	0.0008	0.0032	0.0011	0.57	6.87	OK
2	102	0.0017	0.0032	0.0022	0.83	6.71	OK
3	0	0.0000	0.0032	0.0000	0.00	#VALUE!	N/A
4	0	0.0000	0.0032	0.0000	0.00	#VALUE!	N/A
5	0	0.0000	0.0032	0.0000	0.00	#VALUE!	N/A

Check shear

$V_c = (.0316)*\beta \sqrt{f'_c}\, b_v d_v$ *(V_c calculated by AASHTO LRFD eq'n 5.8.3.3-3)*

$\phi = 0.9$ *(AASHTO LRFD 5.5.4.2.1)*

$\beta = 2$ *(AASHTO LRFD 5.8.3.4.1)*

$d_v = .9*d$ or $.72*h$ *whichever is greater (AASHTO LRFD 5.8.2.9)*

anchor	ϕV_c	check $V_u < \phi V_c$
1	59.34	OK
2	42.86	OK
3	0.00	N/A
4	0.00	N/A
5	0.00	N/A

VI. CHECK TYPE 'F' ANCHOR ATTACHMENT

Check capacity of connector for pullout (truncated pyramid failure), shear, tension, and combined shear & tension

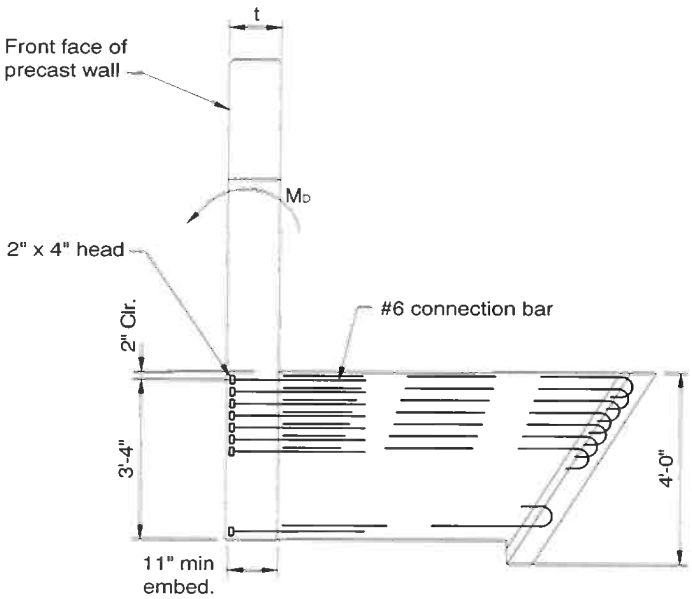

embedment depth (l_e) = **11 in**

Attachment depth = 42 in

X head dimension (Xd_{head}) = 3 in

Y head dimension (Yd_{head}) = 3 in

Bar size = **# 6**

rows = **7**

row spacing = **3 in**

wall thickness (t) = 12 in

x = Xd_{head} (*since only 1 column*) = 3 in

y = (#rows-1)(row spacing) + Yd_{head} = 21 in

z = min(x,y) = 3 in

h_{min} = (z + l_e)/2 = 12.5 in

A_R = (x+2 l_e-2d)(y+2 l_e-2d) = 19.0 in^2

f'_c = **4000 psi**

f_y = **60000 psi**

$\phi_{concrete}$ = 0.85

ϕ_{steel} = 0.90

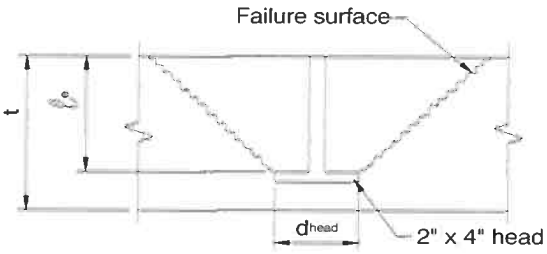

TENSION CAPACITY (Per PCI Design Handbook §6.5.2.1)

t < hmin: failure surface penetrates slab

Find pullout capacity of concrete

if t >= h_{min}, ϕP_c = ϕ2.67sqrt(f'c)(x+2 l_e)(y+2 l_e)

if t < h_{min}, ϕP_c = ϕ2.67sqrt(f'c)[(x+2 l_e)(y+2 l_e) - A_R]

ϕP_c = 151.57 K

Find tension capacity of studs

ϕP_y = $\phi f_y(A_{bar})$(#bars)

ϕP_y = 167.00 K

controlling tension capacity (ϕP) = 151.57 K

Find moment capacity of anchor

Moment capacity of anchor (ϕM_n) = ϕP(d-a/2)

d = attachment depth - bar cover - (y-Yd_{head})/2 = 31 in

a = $A_s f_y$/0.85f'_cb = 9.10 in

ϕM_n = 334.12 k-f

SHEAR CAPACITY (Per PCI Design Handbook §6.5.2.2)

Find shear capacity of concrete

$\phi V_c = \phi V'_c C_w C_t C_c$

$\phi V'_c = \phi 12.5 d_e^{1.5} \text{sqrt}(f'_c)$	= 167.6 K
$C_w = 1 + \text{spacing}/3.5d_e < \#\text{columns}$	= 1.0
$C_t = t/1.3d_e <= 1.0$	= 0.23
$C_c = 0.4 + 0.7d_c/de <= 1.0$	= 0.9
d_e = attachment depth - cover - bar dia/2	= 40 in
d_c = distance to side of wingwall	= 30 in

$\phi V_c = \phi V'_c C_w C_t C_c =$ 36.31 K

Find shear capacity of studs

$\phi V_y = \phi 0.9 f_y A_{bar} (\#\text{bars})$

$\phi V_y =$ 150.30 K

controlling shear capacity (ϕV) = 36.31 K

FIND LOADS

Unfactored loads on anchors:

$M_{D(DL)}$ = (sec width)$M_{D(anchor)}$

$M_{D(LL)}$ = (sec width)($M_{D(anchor)}$ + P_{imp}*(wall ht + y_{imp}))

Factored loads:

Load factors are per AASHTO 3.22.1 & Table 3.22.1A

$M_u = (1.3)(1.3)M_{D(DL)} + (1.3)(1.67)M_{D(LL)}$

$P_u = M_u$ /(d-a/2)*cos(bar angle)

$V_u = M_u$ /(d-a/2)*sin(bar angle)

bar angle = 0°

Summary of forces

anchor	$M_{D(DL)}$ ft-k	$M_{D(LL)}$ ft-k	M_u ft-k	P_u k	V_u k
1	81.4	0.0	137.6	62.4	0.0
2	56.2	0.0	95.0	43.1	0.0
3	0.0	0.0	0.0	0.0	0.0
4	0.0	0.0	0.0	0.0	0.0
5	0.0	0.0	0.0	0.0	0.0

Summary of results

anchor	check $\phi M_n > M_u$	check $\phi P > P_u$	check $\phi V > V_u$	check combined V_c & P_c	check combined V_s & P_s
1	OK	OK	OK	OK	OK
2	OK	OK	OK	OK	OK
3	n/a	n/a	n/a	n/a	n/a
4	n/a	n/a	n/a	n/a	n/a
5	n/a	n/a	n/a	n/a	n/a

Section 7
Mathcad Headwall Calculations

DESIGN OF HEADWALLS;
Design Impact Load - NONE

Ref.: CSI Dwg. No.: C22283 - LO2

DESIGN PARAMETERS:

$f_c := 5000$ psi $\quad f_y := 60000$psi $\quad \gamma_e := 140\frac{lbf}{ft^3}$ unit weight of earth

$\gamma_c := 150\frac{lbf}{ft^3}$ unit weight of concrete $\quad \beta := 30$ backfill angle of inclination (degrees)

$\psi := 32$ Soil friction angle (active) (degrees)

$$k_a := \cos(\beta\cdot 0.01745329)\cdot\left(\frac{\cos(\beta\cdot 0.01745329) - \sqrt{\cos(\beta\cdot 0.01745329)^2 - \cos(\psi\cdot 0.01745329)^2}}{\cos(\beta\cdot 0.01745329) + \sqrt{\cos(\beta\cdot 0.01745329)^2 - \cos(\psi\cdot 0.01745329)^2}}\right)$$

$k_a = 0.57$

$LEPMAX := k_a\cdot\gamma_e\cdot 1ft \quad LEPMAX = 80\cdot\frac{lbf}{ft^2}$ lateral earth pressure

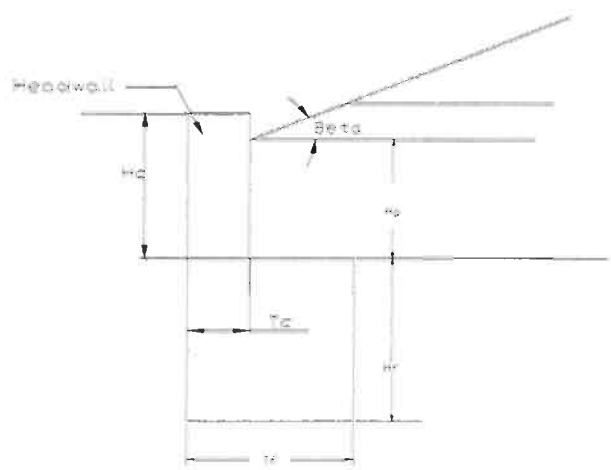

GEOMETRY:

$Hc := 2.33ft$ height of headwall $\quad Hg := 2.0ft \quad Hg = 2\,ft$ height to grade

$Tc := 12in$ Headwall thickness $\quad Hf := 12.33ft$ height of frame

$Tf := 5.28ft$ frame length $\quad c := 2\cdot in$ bar clear distance

$db := .5\cdot in$ bar diameter $\quad d := Tc - c - \frac{db}{2} \quad d = 9.75\cdot in$

LOADING:

Lateral Earth Pressure:

$w_{eb} := Hg \cdot LEPMAX \qquad w_{eb} = 161 \cdot \frac{lbf}{ft} \qquad F_e := \left(\frac{w_{eb}}{2}\right) \cdot Hg \qquad F_e = 160.75 \cdot lbf$

Moment:

$M_e := F_e \cdot \left(\frac{Hg}{3}\right) \qquad M_e = 107.168 \cdot ft \cdot lbf$

LOADING:

Lateral Earth Pressure:

$w_{eb} := Hg \cdot LEPMAX \qquad w_{eb} = 161 \cdot \frac{lbf}{ft} \qquad F_e := \left(\frac{w_{eb}}{2}\right) \cdot Hg \qquad F_e = 160.75 \cdot lbf$

Moment:

$M_e := F_e \cdot \left(\frac{Hg}{3}\right) \qquad M_e = 107.168 \cdot ft \cdot lbf$

DESIGN:

Moment:

$f_s := 0.4 \cdot f_y \qquad f_s = 2.4 \times 10^4 \, psi$ Allowable Stress

$A_s := \frac{M_e}{f_s \cdot .9 \cdot d} \qquad A_s = 6.106 \times 10^{-3} \cdot in^2$

$A_{sMin} := 0.0018 \cdot Tc \cdot 12in \qquad A_{sMin} = 0.259 \cdot in^2$ Use #4 @ 9" As=0.27 in^2

Distribution Reinforcement

$A_{sMin} := .0018 \cdot 12in \cdot \frac{Tc}{2} \qquad A_{sMin} = 0.13 \cdot in^2$ Use #4 @ 18" As=0.13 in^2

Section 8
Bridge Load Rating

Description	Pages
Summary	1
Mathcad Calculations: 20' x 10' B C, 4ft Earth Cover, HL93	18
STAADPRO Output: 20' x 10' B C, 4ft Earth Cover, HL93	41
TOTAL PAGES	60

Route No: VT 58
Bridge No 7
Irasburg, VT

02/25/15

LRFR LOAD RATING FACTORS

LOADING LEVELS	TRUCK						
	H-20	HL-93	3SC	6 AXLE	3A. STR.	4A. STR.	5A. SEMI.
TONNAGE	20	36	36	66	30	34.5	38
INVENTORY	1.61	1.04	1.92	1.1	1.24	1.16	2.12
POSTING							
OPERATING	2.08	1.35	2.49	1.43	1.60	1.50	2.75

20ft x 10ft Box Culvert;
Design Input Data for STAAD.Pro Analysis;
HL93 Live Load; Earth Cover C=3ft - 4ft

Reference Dwg:
C22283-LO1

References:
1. **AASHTO The Manual for Bridge Evaluation 2nd Edition 2011**
2. **Attachment A: STAAD.Pro Computer Output.**

DESIGN PARAMETERS:

$\gamma_w := 62.4 \cdot \frac{lbf}{ft^3}$ unit weight of water

$\gamma_c := 150 \cdot \frac{lbf}{ft^3}$ unit weight of concrete

$\gamma_e := 140 \cdot \frac{lbf}{ft^3}$ unit weight of earth

$DE_1 := 3 \quad ft$ Depth of earth Cover -Min

$DE_2 := 4 \quad ft$ Depth of earth Cover -Max

$W_T := 20 \cdot in$ Width of tire contact area -perpendicular to span

$DE_{ave} := \frac{DE_1 + DE_2}{2} = 3.5 \ ft$ Depth of earth Cover -Average

$L_T := 10 \cdot in$ Length of tire contact area -parallel to span

$K_{max} := .5$ max. earth pressure coefficient

$LLDF := 1.15$ factor for distribution of live load with depth of fill

$K_{min} := .25$ min. earth pressure coefficient

Geometry:

$ClearSpan := 20 \cdot ft$ ClearSpan

$ClearRise := 10 \cdot ft$ ClearRise

Member Properties:

$b := 12 \cdot in$ design section width

$t_t := 14 \cdot in$ top slab thickness

$t_w := 12 \cdot in$ wall thickness

$t_b := 14 \cdot in$ bottom slab thickness

$L_{Section} := 7.5 \cdot ft$ Section Length

$Span := ClearSpan + t_w = 21 \ ft$

$Rise := ClearRise + \left(\frac{t_t}{2}\right) = 10.583 \ ft$

$t_{Min} := \frac{ClearSpan + 10 \cdot ft}{30} = 1 \ ft$ Estimate Slab Thickness — AASHTO Table 2.5.2.6.3-1

$F_e := 1 + 0.2 \cdot \frac{DE_2 \cdot ft}{ClearSpan + 2 \cdot t_w} = 1.036$ Soil-Structure Interaction Factor — AASHTO Eqn 12.11.2.2.1-2

$F_{eMax} := min(F_e, 1.15) = 1.036$

Dead Load: (DL)

$D_{earth} := F_{eMax} \cdot \gamma_e \cdot DE_{ave} \cdot ft \cdot 1 \cdot ft = 507.818 \ \frac{lbf}{ft}$ Dead Load on Top Slab

$D_{base} := D_{earth} = 507.818 \ \frac{lbf}{ft}$ Dead Load on Base Slab

Live Load: Design Truck

Multiple presence factor $M := 1.2$ $L_{Section} = 7.5\ ft$ Section Length

$F_1 := 8000 \cdot lbf$ Axle load 1 $F_{23} := 32000 \cdot lbf$ Axle load 2 & 3

$Im := 33 \cdot (1.0 - 0.125 \cdot DE_{ave}) = 18.563$ Dynamic load allowance $I_i := 1 + \frac{Im}{100} = 1.186$

$I := max(1., I_i) = 1.186$

$E_{perp} := W_T + (LLDF \cdot DE_{ave} \cdot ft) = 5.692\ ft$ Distribution - perpendicular to span

$E_{para} := L_T + (LLDF \cdot DE_{ave} \cdot ft) = 4.858\ ft$ Distribution - parallel to span

$D := 6 \cdot ft$ Wheel spacing across a Design truck $D1 := 14 \cdot ft$ Axle spacing of a Design truck

Top Slab

$$P_{Tr1} := \frac{M \cdot I \cdot F_{23} \cdot ft}{(E_{perp} + D) \cdot (E_{para})} = 801.521\ \frac{lbf}{ft}$$

$$P_{Tr2} := \frac{2\ M \cdot I \cdot F_{23} \cdot ft}{(E_{perp} + D) \cdot (E_{para} + D1)} = 412.98\ \frac{lbf}{ft}$$

$$E_{para} + D1 = 18.858\ ft$$

Bottom Slab

$$w_1 := \frac{P_{Tr1} \cdot E_{para}}{I \cdot ClearSpan} = 164.22\ \frac{lbf}{ft}$$

$$w_2 := \frac{P_{Tr2} \cdot (E_{para} + D1)}{I \cdot ClearSpan} = 328.439\ \frac{lbf}{ft}$$

Live Load: Design Tandem

Multiple presence factor $M := 1.2$ $F_{34} := 25000 \cdot lbf$ Axle load 3 & 4

$Im := 33 \cdot (1.0 - 0.125 \cdot DE_{ave}) = 18.563$ Dynamic load allowance $I_i := 1 + \frac{Im}{100} = 1.186$

$I := max(1., I_i) = 1.186$

$E_{perp} := W_T + (LLDF \cdot DE_{ave} \cdot ft) = 5.692\ ft$ Distribution - perpendicular to span

$E_{para} := L_T + (LLDF \cdot DE_{ave} \cdot ft) = 4.858\ ft$ Distribution - parallel to span

$D := 6 \cdot ft$ Wheel spacing across a Design tandem $D3 := 4 \cdot ft$ Axles spacing of a Design tandem

Top Slab

$$P_{34} := \frac{2 \cdot M \cdot I \cdot F_{34} \cdot ft}{(E_{perp} + D) \cdot (E_{para} + D3)} = 686.863\ \frac{lbf}{ft}$$

$$E_{para} + D3 = 8.858\ ft$$

Bottom Slab

$$w_{34} := \frac{P_{34} \cdot (E_{para} + D3)}{I \cdot ClearSpan} = 256.593\ \frac{lbf}{ft}$$

Live Load: Design Lane load **Apply only if span is greater than 15ft**

$W_{10} := 640 \cdot \frac{lbf}{ft}$ Design Lane load over 10 ft width

$W_1 := \frac{W_{10}}{10} = 64 \ \frac{lbf}{ft}$ Design Lane load per ft run

OTHER TRUCK CONFIGURATIONS

Live Load: H20

Multiple presence factor $M := 1.2$

$F_1 := 8000 \cdot lbf$ Axle load 1 $F_{23} := 32000 \cdot lbf$ Axle load 2 & 3

2 axles are Spaced : 14ft apart

$D := 6 \cdot ft$ Wheel spacing $D1 := 14 \cdot ft$ Axle spacing

Top Slab

$$P_{3a} := \frac{M \cdot I \cdot F_{23} \cdot ft}{(E_{perp} + D) \cdot E_{para}} = 801.521 \ \frac{lbf}{ft}$$

$$P_{3b} := \frac{M \cdot I \cdot F_1 \cdot ft + M \cdot I \cdot F_{23} \cdot ft}{(E_{perp} + D) \cdot (E_{para} + D1)} = 258.112 \ \frac{lbf}{ft}$$

Bottom Slab

$$w_{3a} := \frac{P_{3a} \cdot E_{para}}{I \cdot ClearSpan} = 164.22 \ \frac{lbf}{ft}$$

$$w_{3b} := \frac{P_{3b} \cdot (E_{para} + D1)}{I \cdot ClearSpan} = 205.274 \ \frac{lbf}{ft}$$

$$E_{para} + D1 = 18.858 \ ft$$

Live Load: 3SC

Multiple presence factor $M := 1.2$

$F_1 := 8000 \cdot lbf$ Axle load 1 $F_{Others1} := 16000 \cdot lbf$ Other Axle loads

3 critical axles are Spaced :11ft & 4ft apart $D4a := 11 \cdot ft$ $D4b := 4 \cdot ft$ Axle spacing

Top Slab

$$P_{4b} := \frac{2 \cdot M \cdot I \cdot F_{Others1} \cdot ft}{(E_{perp} + D) \cdot (E_{para} + D4b)} = 439.592 \ \frac{lbf}{ft}$$

Bottom Slab

$$w_{4b} := \frac{P_{4b} \cdot (E_{para} + D4b)}{I \cdot ClearSpan} = 164.22 \ \frac{lbf}{ft}$$

$$E_{para} + D4b = 8.858 \ ft$$

$$P_{4ab} := \frac{M \cdot I \cdot F_1 \cdot ft + 2 \cdot M \cdot I \cdot F_{Others1} \cdot ft}{(E_{perp} + D) \cdot (E_{para} + D4b + D4a)} = 245.115 \ \frac{lbf}{ft}$$

$$E_{para} + D4b + D4a = 19.858 \ ft$$

$$w_{4ab} := \frac{P_{4ab} \cdot (E_{para} + D4b + D4a)}{I \cdot ClearSpan} = 205.274 \ \frac{lbf}{ft}$$

Live Load: 6 Axle Trailer

Multiple presence factor $M := 1.0$

$F_1 := 12000 \cdot lbf$ Axle load 1 $F_{Others2} := 24000 \cdot lbf$ Other Axle loads

3 critical axles are Spaced:
4ft & 4ft apart $D5 := 4 \cdot ft$ Axle spacing

Top Slab

$$P_5 := \frac{3 \cdot M \cdot I \cdot F_{Others2} \cdot ft}{(E_{perp} + D) \cdot (E_{para} + 2\ D5)} = 567.831\ \frac{lbf}{ft}$$

Bottom Slab

$$w_5 := \frac{P_5 \cdot (E_{para} + 2\ D5)}{I \cdot ClearSpan} = 307.912\ \frac{lbf}{ft}$$

$$E_{para} + 2\ D5 = 12.858\ ft$$

Live Load: 3 Axle Straight

Multiple presence factor $M := 1.2$

$F_1 := 12000 \cdot lbf$ Axle load 1 $F_{Others3} := 24000 \cdot lbf$ Other Axle loads

3 critical axles are
Spaced:
15ft & 4ft apart $D6b := 15 \cdot ft$ $D6a := 4 \cdot ft$ Axle spacing

Top Slab

$$P_{6a} := \frac{2 \cdot M \cdot I \cdot F_{Others3} \cdot ft}{(E_{perp} + D) \cdot (E_{para} + D6a)} = 659.389\ \frac{lbf}{ft}$$

Bottom Slab

$$w_{6a} := \frac{P_{6a} \cdot (E_{para} + D6a)}{I \cdot ClearSpan} = 246.329\ \frac{lbf}{ft}$$

$$E_{para} + D6a = 8.858\ ft$$

$$P_{6ab} := \frac{M \cdot I \cdot F_1 \cdot ft + 2 \cdot M \cdot I \cdot F_{Others3} \cdot ft}{(E_{perp} + D) \cdot (E_{para} + D6a + D6b)} = 306.03\ \frac{lbf}{ft}$$

$$E_{para} + D6a + D6b = 23.858\ ft$$

$$w_{6ab} := \frac{P_{6ab} \cdot (E_{para} + D6a + D6b)}{I \cdot ClearSpan} = 307.912\ \frac{lbf}{ft}$$

Live Load: 4 Axle Straight

Multiple presence factor $M := 1.2$

$F_1 := 12000 \cdot lbf$ Axle load 1 $F_{Others4} := 19000 \cdot lbf$ Other Axle loads

3 critical axles are
Spaced: 4ft & 4ft apart $D7 := 4 \cdot ft$ Axle spacing

Top Slab

$$P_7 := \frac{3 \cdot M \cdot I \cdot F_{Others4} \cdot ft}{(E_{perp} + D) \cdot (E_{para} + 2\ D7)} = 539.439\ \frac{lbf}{ft}$$

Bottom Slab

$$w_7 := \frac{P_7 \cdot (E_{para} + 2\ D7)}{I \cdot ClearSpan} = 292.516\ \frac{lbf}{ft}$$

$$E_{para} + 2\ D7 = 12.858\ ft$$

Live Load: 5 Axle Semi

Multiple presence factor $M := 1.0$

$F_1 := 8000 \cdot lbf$ Axle load 1 $F_{Others5} := 17000 \cdot lbf$ Other Axle loads

3 critical axles are Spaced:11ft& 4ft apart $D8b := 11 \cdot ft$ $D8a := 4 \cdot ft$ Axle spacing

Top Slab

$$P_{8a} := \frac{2 \cdot M \cdot I \cdot F_{Others5} \cdot ft}{(E_{perp} + D) \cdot (E_{para} + D8a)} = 389.222 \ \frac{lbf}{ft}$$

Bottom Slab

$$w_{8a} := \frac{P_{8a} \cdot (E_{para} + D8a)}{I \cdot ClearSpan} = 145.403 \ \frac{lbf}{ft}$$

$$(E_{para} + D8a) = 8.858 \ ft$$

$$P_{8ab} := \frac{M \cdot I \cdot F_1 \cdot ft + 2 \cdot M \cdot I \cdot F_{Others5} \cdot ft}{(E_{perp} + D) \cdot (E_{para} + D8a + D8b)} = 214.475 \ \frac{lbf}{ft}$$

$$w_{8ab} := \frac{P_{8ab} \cdot (E_{para} + D8a + D8b)}{I \cdot ClearSpan} = 179.615 \ \frac{lbf}{ft}$$

$$(E_{para} + D8a + D8b) = 19.858 \ ft$$

Lateral Earth Pressure :

$H1 := DE_2 \cdot ft + t_t = 5.167 \ ft$ soil depth at top of wall

$H2 := H1 + ClearRise = 15.167 \ ft$ soil depth at bottom of wall

$LEPMIN := K_{min} \cdot \gamma_e \cdot 1 \cdot ft = 35 \ psf$ minimum lateral earth pressure

$LEPMAX := K_{max} \cdot \gamma_e \cdot 1 \cdot ft = 70 \ psf$ maximum lateral earth pressure

Minimum **(EMIN)**

top of wall

$$w_{et} := H1 \cdot LEPMIN = 180.833 \ \frac{lbf}{ft}$$

bottom of wall

$$w_{eb} := H2 \cdot LEPMIN = 530.833 \ \frac{lbf}{ft}$$

Maximum **(EMAX)**

$$w_{et} := H1 \cdot LEPMAX = 361.667 \ \frac{lbf}{ft}$$

$$w_{eb} := H2 \cdot LEPMAX = (1.062 \cdot 10^3) \ \frac{lbf}{ft}$$

Internal Fluid Pressure: (IFP)

$$w_{ib} := \gamma_w \cdot ClearRise \cdot 1 \cdot ft = 624 \ \frac{lbf}{ft}$$

bottom of wall

Member Capacity Calculations:

TOP SLAB: Member 4

Shear Capacity

$t_t = 14\ in$ $\quad c := 1.5 \cdot in$ rebar clear distance $\quad d_b := 0.5 \cdot in$ bar diameter

$f_c := 5\ ksi$ $\quad d := t_t - c - \frac{d_b}{2} = 12.25\ in$ $\quad \beta := 2$

$d_{v1} := 0.9 \cdot d = 11.025\ in$ $\quad b_v := 12 \cdot in$ Width

$d_{v2} := 0.72 \cdot t_t = 10.08\ in$ $\quad d_v := max(d_{v1}, d_{v2}) = 11.025\ in$

$\phi V_{cTS} := .9 \cdot .0316 \cdot \beta \cdot \sqrt{f_c} \cdot ksi \cdot b_v \cdot d_v = (1.683 \cdot 10^4)\ lbf$

Moment Capacity

$A_s := 1.02 \cdot in^2$ Rebar Area $\quad f_c := 5000\ psi$

$f_y := 60000$ $\quad a := \frac{A_s \cdot f_y}{.85 \cdot f_c \cdot 12 \cdot in} = 1.2\ in$ $\quad f_y := 60000 \cdot psi$

$\phi M_{nTS} := .95 \cdot A_s \cdot f_y \cdot \left(d - \frac{a}{2}\right) = (5.644 \cdot 10^4)\ ft \cdot lbf$

BOTTOM SLAB: Member 3

Shear Capacity

$t_b = 14\ in$ $\quad c := 1.5 \cdot in$ rebar clear distance $\quad d_b := 0.5 \cdot in$ bar diameter

$f_c := 5\ ksi$ $\quad d := t_b - c - \frac{d_b}{2} = 12.25\ in$ $\quad \beta := 2$

$d_{v1} := 0.9 \cdot d = 11.025\ in$ $\quad b_v := 12 \cdot in$ Width

$d_{v2} := 0.72 \cdot t_b = 10.08\ in$ $\quad d_v := max(d_{v1}, d_{v2}) = 11.025\ in$

$\phi V_{cBS} := .9 \cdot .0316 \cdot \beta \cdot \sqrt{f_c} \cdot ksi \cdot b_v \cdot d_v = (1.683 \cdot 10^4)\ lbf$

Moment Capacity

$A_s := 0.98 \cdot in^2$ Rebar Area $\quad f_c := 5000\ psi$

$f_y := 60000$ $\quad a := \frac{A_s \cdot f_y}{.85 \cdot f_c \cdot 12 \cdot in} = 1.153\ in$ $\quad f_y := 60000 \cdot psi$

$\phi M_{nBS} := .95 \cdot A_s \cdot f_y \cdot \left(d - \frac{a}{2}\right) = (5.434 \cdot 10^4)\ ft \cdot lbf$

WALLS: Members 1 & 2

Shear Capacity

$t_w = 12\ in$ wall thickness

$c := 1.5 \cdot in$ rebar clear distance

$f_c := 5\ ksi$

$d := t_w - c - \frac{d_b}{2} = 10.25\ in$ $\beta := 2$

$d_{v1} := 0.9 \cdot d = 9.225\ in$

$b_v := 12 \cdot in$ Width

$d_{v2} := 0.72 \cdot t_w = 8.64\ in$

$d_v := max(d_{v1}, d_{v2}) = 9.225\ in$

$$\phi V_{cW} := .9 \cdot .0316 \cdot \beta \cdot \sqrt{f_c} \cdot ksi \cdot b_v \cdot d_v = \left(1.408 \cdot 10^4\right)\ lbf$$

Moment Capacity

$A_s := 0.88 \cdot in^2$ Rebar Area

$f_c := 5000\ psi$

$f_y := 60000$

$a := \frac{A_s \cdot f_y}{.85 \cdot f_c \cdot 12 \cdot in} = 1.035\ in$

$f_y := 60000 \cdot psi$

$$\phi M_{nW} := .95 \cdot A_s \cdot f_y \cdot \left(d - \frac{a}{2}\right) = \left(4.068 \cdot 10^4\right)\ ft \cdot lbf$$

Load Rating Calculations

Load Combinations:

- 1.0DC+ 1.0Emin - "Dead".
- 1.0LL + 1.0Emin + 1.0Win - "MOMENT & SHEAR ".

Where,
DC - Dead Load;
LL - Live Load;
Emin - Min. Lateral Earth Pressure;
Win - Inside Water Pressure.

STAAD.Pro Computer Output.

$DeadM_{TS} := 20070 \cdot ft \cdot lbf$ Top Slab Dead Load Moment

$DeadM_{BS} := 11810 \cdot ft \cdot lbf$ Bottom Slab Dead Load Moment

$DeadM_{W} := 16310 \cdot ft \cdot lbf$ Wall Dead Load Moment

$DeadV_{TS} := 5739 \cdot lbf$ Top Slab Dead Load Shear @ 0.9d+haunch

$DeadV_{BS} := 3340 \cdot lbf$ Bottom Slab Dead Load Shear

$DeadV_{W} := 1950 \cdot lbf$ Wall Dead Load Shear

HL93 TRUCK

Inventory Rating: $\gamma_{DC} := 1.25$ $\gamma_{LL} := 1.75$

Moment Top Slab; $LiveM_{TS} := 14690 \cdot ft \cdot lbf$ Top Slab Live Load Moment

$$RFM_{TS} := \frac{\phi M_{nTS} - \gamma_{DC} \cdot DeadM_{TS}}{\gamma_{LL} \cdot LiveM_{TS}} = 1.22$$

Bottom Slab; $LiveM_{BS} := 11270\ ft \cdot lbf$ Bottom Slab Live Load Moment

$$RFM_{BS} := \frac{\phi M_{nBS} - \gamma_{DC} \cdot DeadM_{BS}}{\gamma_{LL} \cdot LiveM_{BS}} = 2.01$$

Walls; $LiveM_{W} := 10810 \cdot ft \cdot lbf$ Wall Live Load Moment

$$RFM_{W} := \frac{\phi M_{nW} - \gamma_{DC} \cdot DeadM_{W}}{\gamma_{LL} \cdot LiveM_{W}} = 1.07$$

Shear

Top Slab;
@0.9d +haunch

$LiveV_{TS} := 4014 \cdot lbf$ Top Slab Live Load Shear

$$RFV_{TS} := \frac{\phi V_{cTS} - \gamma_{DC} \cdot DeadV_{TS}}{\gamma_{LL} \cdot LiveV_{TS}} = 1.37$$

Bottom Slab;

$LiveV_{BS} := 3280 \cdot lbf$ Bottom Slab Live Load Shear

$$RFV_{BS} := \frac{\phi V_{cBS} - \gamma_{DC} \cdot DeadV_{BS}}{\gamma_{LL} \cdot LiveV_{BS}} = 2.2$$

Walls;

$LiveV_{W} := 1030 \cdot lbf$ Wall Live Load Shear

$$RFV_{W} := \frac{\phi V_{cW} - \gamma_{DC} \cdot DeadV_{W}}{\gamma_{LL} \cdot LiveV_{W}} = 6.46$$

Inventory Rating:

$$RFTrI_{MIN} := min\left(RFM_{TS}, RFM_{BS}, RFM_{W}, RFV_{TS}, RFV_{BS}, RFV_{W}\right) = 1.07$$

Operating Rating: $\gamma_{DC} := 1.25$ $\gamma_{LL} := 1.35$

Use corresponding Values
that govern Inventory Rating

$$\phi M_{nmin} := \phi M_{nW} = \left(4.068 \cdot 10^{4}\right)\ ft \cdot lbf$$

$$DeadM_{min} := DeadM_{W} = \left(1.631 \cdot 10^{4}\right)\ ft \cdot lbf$$

$$LiveM_{min} := LiveM_{W} = \left(1.081 \cdot 10^{4}\right)\ ft \cdot lbf$$

$$RFTrO := \frac{\phi M_{nmin} - \gamma_{DC} \cdot DeadM_{min}}{\gamma_{LL} \cdot LiveM_{min}} = 1.39$$

HL93 TANDEM

Inventory Rating: $\gamma_{DC} := 1.25$ $\gamma_{LL} := 1.75$

Moment Top Slab;

$LiveM_{TS} := 16960 \cdot ft \cdot lbf$ Top Slab Live Load Moment

$$RFM_{TS} := \frac{\phi M_{nTS} - \gamma_{DC} \cdot DeadM_{TS}}{\gamma_{LL} \cdot LiveM_{TS}} = 1.056$$

Bottom Slab;

$LiveM_{BS} := 9260 \cdot ft \cdot lbf$ Bottom Slab Live Load Moment

$$RFM_{BS} := \frac{\phi M_{nBS} - \gamma_{DC} \cdot DeadM_{BS}}{\gamma_{LL} \cdot LiveM_{BS}} = 2.44$$

Walls;

$LiveM_W := 11100 \cdot ft \cdot lbf$ Wall Live Load Moment

$$RFM_W := \frac{\phi M_{nW} - \gamma_{DC} \cdot DeadM_W}{\gamma_{LL} \cdot LiveM_W} = 1.04$$

Shear

Top Slab; @0.9d +haunch

$LiveV_{TS} := 4176 \cdot lbf$ Top Slab Live Load Shear

$$RFV_{TS} := \frac{\phi V_{cTS} - \gamma_{DC} \cdot DeadV_{TS}}{\gamma_{LL} \cdot LiveV_{TS}} = 1.321$$

Bottom Slab;

$LiveV_{BS} := 2640 \cdot lbf$ Bottom Slab Live Load Shear

$$RFV_{BS} := \frac{\phi V_{cBS} - \gamma_{DC} \cdot DeadV_{BS}}{\gamma_{LL} \cdot LiveV_{BS}} = 2.74$$

Walls;

$LiveV_W := 1160 \cdot lbf$ Wall Live Load Shear

$$RFV_W := \frac{\phi V_{cW} - \gamma_{DC} \cdot DeadV_W}{\gamma_{LL} \cdot LiveV_W} = 5.74$$

Inventory Rating:

$$RFTaI_{MIN} := min\left(RFM_{TS}, RFM_{BS}, RFM_W, RFV_{TS}, RFV_{BS}, RFV_W\right) = 1.04$$

Operating Rating:

$\gamma_{DC} := 1.25 \quad \gamma_{LL} := 1.35$

Use corresponding Values that govern Inventory Rating

$\phi M_{nmin} := \phi M_{nW} = \left(4.068 \cdot 10^4\right)\ ft \cdot lbf$

$DeadM_{min} := DeadM_W = \left(1.631 \cdot 10^4\right)\ ft \cdot lbf$

$LiveM_{min} := LiveM_W = \left(1.11 \cdot 10^4\right)\ ft \cdot lbf$

$$RFTaO := \frac{\phi M_{nmin} - \gamma_{DC} \cdot DeadM_{min}}{\gamma_{LL} \cdot LiveM_{min}} = 1.35$$

Truck Rating Calculations (See attached Truck Diagrams)

HS 20

Inventory Rating: $\gamma_{DC} := 1.25$ $\gamma_{LL} := 1.75$

Moment Top Slab; $LiveM_{TS} := 11160 \cdot ft \cdot lbf$ Top Slab Live Load Moment

$$RFM_{TS} := \frac{\phi M_{nTS} - \gamma_{DC} \cdot DeadM_{TS}}{\gamma_{LL} \cdot LiveM_{TS}} = 1.61$$

Bottom Slab; $LiveM_{BS} := 6690 \cdot ft \cdot lbf$ Bottom Slab Live Load Moment

$$RFM_{BS} := \frac{\phi M_{nBS} - \gamma_{DC} \cdot DeadM_{BS}}{\gamma_{LL} \cdot LiveM_{BS}} = 3.38$$

Walls; $LiveM_{W} := 6440 \cdot ft \cdot lbf$ Wall Live Load Moment

$$RFM_{W} := \frac{\phi M_{nW} - \gamma_{DC} \cdot DeadM_{W}}{\gamma_{LL} \cdot LiveM_{W}} = 1.8$$

Shear

Top Slab; @0.9d +haunch $LiveV_{TS} := 2129 \cdot lbf$ Top Slab Live Load Shear

$$RFV_{TS} := \frac{\phi V_{cTS} - \gamma_{DC} \cdot DeadV_{TS}}{\gamma_{LL} \cdot LiveV_{TS}} = 2.59$$

Bottom Slab; $LiveV_{BS} := 2050 \cdot lbf$ Bottom Slab Live Load Shear

$$RFV_{BS} := \frac{\phi V_{cBS} - \gamma_{DC} \cdot DeadV_{BS}}{\gamma_{LL} \cdot LiveV_{BS}} = 3.53$$

Walls; $LiveV_{W} := 850 \cdot lbf$ Wall Live Load Shear

$$RFV_{W} := \frac{\phi V_{cW} - \gamma_{DC} \cdot DeadV_{W}}{\gamma_{LL} \cdot LiveV_{W}} = 7.83$$

Inventory Rating:

$$RFHS20I_{MIN} := min\left(RFM_{TS}, RFM_{BS}, RFM_{W}, RFV_{TS}, RFV_{BS}, RFV_{W}\right) = 1.61$$

Operating Rating: $\gamma_{DC} := 1.25$ $\gamma_{LL} := 1.35$

$$\phi M_{nmin} := \phi M_{nTS} = \left(5.644 \cdot 10^{4}\right)\ ft \cdot lbf$$

Use corresponding Values that govern Inventory Rating

$$DeadM_{min} := DeadM_{TS} = \left(2.007 \cdot 10^{4}\right)\ ft \cdot lbf$$

$$LiveM_{min} := LiveM_{TS} = \left(1.116 \cdot 10^4\right)\ ft \cdot lbf$$

$$RFHS20O := \frac{\phi M_{nmin} - \gamma_{DC} \cdot DeadM_{min}}{\gamma_{LL} \cdot LiveM_{min}} = 2.08$$

3S2

Inventory Rating: $\gamma_{DC} := 1.25$ $\gamma_{LL} := 1.75$

Moment Top Slab; $LiveM_{TS} := 9340 \cdot ft \cdot lbf$ Top Slab Live Load Moment

$$RFM_{TS} := \frac{\phi M_{nTS} - \gamma_{DC} \cdot DeadM_{TS}}{\gamma_{LL} \cdot LiveM_{TS}} = 1.92$$

Bottom Slab; $LiveM_{BS} := 6640 \cdot ft \cdot lbf$ Bottom Slab Live Load Moment

$$RFM_{BS} := \frac{\phi M_{nBS} - \gamma_{DC} \cdot DeadM_{BS}}{\gamma_{LL} \cdot LiveM_{BS}} = 3.41$$

Walls; $LiveM_W := 5990 \cdot ft \cdot lbf$ Wall Live Load Moment

$$RFM_W := \frac{\phi M_{nW} - \gamma_{DC} \cdot DeadM_W}{\gamma_{LL} \cdot LiveM_W} = 1.94$$

Shear

Top Slab; @0.9d +haunch $LiveV_{TS} := 2330 \cdot lbf$ Top Slab Live Load Shear

$$RFV_{TS} := \frac{\phi V_{cTS} - \gamma_{DC} \cdot DeadV_{TS}}{\gamma_{LL} \cdot LiveV_{TS}} = 2.37$$

Bottom Slab; $LiveV_{BS} := 2050 \cdot lbf$ Bottom Slab Live Load Shear

$$RFV_{BS} := \frac{\phi V_{cBS} - \gamma_{DC} \cdot DeadV_{BS}}{\gamma_{LL} \cdot LiveV_{BS}} = 3.53$$

Walls; $LiveV_W := 800 \cdot lbf$ Wall Live Load Shear

$$RFV_W := \frac{\phi V_{cW} - \gamma_{DC} \cdot DeadV_W}{\gamma_{LL} \cdot LiveV_W} = 8.32$$

Inventory Rating:

$$RF3S2I_{MIN} := min\left(RFM_{TS}, RFM_{BS}, RFM_W, RFV_{TS}, RFV_{BS}, RFV_W\right) = 1.92$$

Operating Rating: $\gamma_{DC} := 1.25$ $\gamma_{LL} := 1.35$

Use corresponding Values that govern Inventory Rating

$$\phi M_{nmin} := \phi M_{nTS} = \left(5.644 \cdot 10^4\right)\ ft \cdot lbf$$

$$DeadM_{min} := DeadM_{TS} = \left(2.007 \cdot 10^4\right)\ ft \cdot lbf$$

$$LiveM_{min} := LiveM_{TS} = \left(9.34 \cdot 10^3\right)\ ft \cdot lbf$$

$$RF3S2O := \frac{\phi M_{nmin} - \gamma_{DC} \cdot DeadM_{min}}{\gamma_{LL} \cdot LiveM_{min}} = 2.49$$

6 AXLE TRAILER

Inventory Rating $\gamma_{DC} := 1.25$ $\gamma_{LL} := 1.75$

Moment

Top Slab; $LiveM_{TS} := 15530 \cdot ft \cdot lbf$ Top Slab Live Load Moment

$$RFM_{TS} := \frac{\phi M_{nTS} - \gamma_{DC} \cdot DeadM_{TS}}{\gamma_{LL} \cdot LiveM_{TS}} = 1.15$$

Bottom Slab; $LiveM_{BS} := 10640 \cdot ft \cdot lbf$ Bottom Slab Live Load Moment

$$RFM_{BS} := \frac{\phi M_{nBS} - \gamma_{DC} \cdot DeadM_{BS}}{\gamma_{LL} \cdot LiveM_{BS}} = 2.13$$

Walls; $LiveM_W := 10540 \cdot ft \cdot lbf$ Wall Live Load Moment

$$RFM_W := \frac{\phi M_{nW} - \gamma_{DC} \cdot DeadM_W}{\gamma_{LL} \cdot LiveM_W} = 1.1$$

Shear

Top Slab; @0.9d +haunch $LiveV_{TS} := 4043 \cdot lbf$ Top Slab Live Load Shear

$$RFV_{TS} := \frac{\phi V_{cTS} - \gamma_{DC} \cdot DeadV_{TS}}{\gamma_{LL} \cdot LiveV_{TS}} = 1.36$$

Bottom Slab; $LiveV_{BS} := 3130 \cdot lbf$ Bottom Slab Live Load Shear

$$RFV_{BS} := \frac{\phi V_{cBS} - \gamma_{DC} \cdot DeadV_{BS}}{\gamma_{LL} \cdot LiveV_{BS}} = 2.31$$

Walls; $LiveV_W := 970 \cdot lbf$ Wall Live Load Shear

$$RFV_W := \frac{\phi V_{cW} - \gamma_{DC} \cdot DeadV_W}{\gamma_{LL} \cdot LiveV_W} = 6.86$$

Inventory Rating:

$$RF6axleI_{MIN} := min\left(RFM_{TS}, RFM_{BS}, RFM_{W}, RFV_{TS}, RFV_{BS}, RFV_{W}\right) = 1.1$$

Operating Rating:

$\gamma_{DC} := 1.25 \quad \gamma_{LL} := 1.35$

Use corresponding Values that govern Inventory Rating

$$\phi M_{nmin} := \phi M_{nW} = \left(4.068 \cdot 10^{4}\right)\ ft \cdot lbf$$

$$DeadM_{min} := DeadM_{W} = \left(1.631 \cdot 10^{4}\right)\ ft \cdot lbf$$

$$LiveM_{min} := LiveM_{W} = \left(1.054 \cdot 10^{4}\right)\ ft \cdot lbf$$

$$RF6axleO := \frac{\phi M_{nmin} - \gamma_{DC} \cdot DeadM_{min}}{\gamma_{LL} \cdot LiveM_{min}} = 1.43$$

3 AXLE STRAIGHT

Inventory Rating: $\gamma_{DC} := 1.25 \qquad \gamma_{LL} := 1.75$

Moment

Top Slab: $LiveM_{TS} := 14490 \cdot ft \cdot lbf$ Top Slab Live Load Moment

$$RFM_{TS} := \frac{\phi M_{nTS} - \gamma_{DC} \cdot DeadM_{TS}}{\gamma_{LL} \cdot LiveM_{TS}} = 1.237$$

Bottom Slab; $LiveM_{BS} := 9820 \cdot ft \cdot lbf$ Bottom Slab Live Load Moment

$$RFM_{BS} := \frac{\phi M_{nBS} - \gamma_{DC} \cdot DeadM_{BS}}{\gamma_{LL} \cdot LiveM_{BS}} = 2.3$$

Walls; $LiveM_{W} := 9130 \cdot ft \cdot lbf$ Wall Live Load Moment

$$RFM_{W} := \frac{\phi M_{nW} - \gamma_{DC} \cdot DeadM_{W}}{\gamma_{LL} \cdot LiveM_{W}} = 1.27$$

Shear

Top Slab; @0.9d +haunch $LiveV_{TS} := 3489 \cdot lbf$ Top Slab Live Load Shear

$$RFV_{TS} := \frac{\phi V_{cTS} - \gamma_{DC} \cdot DeadV_{TS}}{\gamma_{LL} \cdot LiveV_{TS}} = 1.581$$

Bottom Slab; $LiveV_{BS} := 3060 \cdot lbf$ Bottom Slab Live Load Shear

$$RFV_{BS} := \frac{\phi V_{cBS} - \gamma_{DC} \cdot DeadV_{BS}}{\gamma_{LL} \cdot LiveV_{BS}} = 2.36$$

Walls: $LiveV_W := 960 \cdot lbf$ Wall Live Load Shear

$$RFV_W := \frac{\phi V_{cW} - \gamma_{DC} \cdot DeadV_W}{\gamma_{LL} \cdot LiveV_W} = 6.93$$

Inventory Rating:

$$RF3axleSI_{MIN} := min\left(RFM_{TS}, RFM_{BS}, RFM_W, RFV_{TS}, RFV_{BS}, RFV_W\right) = 1.237$$

Operating Rating: $\gamma_{DC} := 1.25$ $\gamma_{LL} := 1.35$

Use corresponding Values that govern Inventory Rating

$$\phi M_{nmin} := \phi M_{nTS} = \left(5.644 \cdot 10^4\right)\ ft \cdot lbf$$

$$DeadM_{min} := DeadM_{TS} = \left(2.007 \cdot 10^4\right)\ ft \cdot lbf$$

$$LiveM_{min} := LiveM_{TS} = \left(1.449 \cdot 10^4\right)\ ft \cdot lbf$$

$$RF3axleSO := \frac{\phi M_{nmin} - \gamma_{DC} \cdot DeadM_{min}}{\gamma_{LL} \cdot LiveM_{min}} = 1.6$$

4 AXLE STRAIGHT

Inventory Rating: $\gamma_{DC} := 1.25$ $\gamma_{LL} := 1.75$

Moment Top Slab: $LiveM_{TS} := 14700 \cdot ft \cdot lbf$ Top Slab Live Load Moment

$$RFM_{TS} := \frac{\phi M_{nTS} - \gamma_{DC} \cdot DeadM_{TS}}{\gamma_{LL} \cdot LiveM_{TS}} = 1.22$$

Bottom Slab: $LiveM_{BS} := 10900 \cdot ft \cdot lbf$ Bottom Slab Live Load Moment

$$RFM_{BS} := \frac{\phi M_{nBS} - \gamma_{DC} \cdot DeadM_{BS}}{\gamma_{LL} \cdot LiveM_{BS}} = 2.07$$

Walls: $LiveM_W := 10000 \cdot ft \cdot lbf$ Wall Live Load Moment

$$RFM_W := \frac{\phi M_{nW} - \gamma_{DC} \cdot DeadM_W}{\gamma_{LL} \cdot LiveM_W} = 1.16$$

Shear

Top Slab: @0.9d +haunch $LiveV_{TS} := 3837 \cdot lbf$ Top Slab Live Load Shear

$$RFV_{TS} := \frac{\phi V_{cTS} - \gamma_{DC} \cdot DeadV_{TS}}{\gamma_{LL} \cdot LiveV_{TS}} = 1.44$$

Bottom Slab; $LiveV_{BS} := 2980 \cdot lbf$ Bottom Slab Live Load Shear

$$RFV_{BS} := \frac{\phi V_{cBS} - \gamma_{DC} \cdot DeadV_{BS}}{\gamma_{LL} \cdot LiveV_{BS}} = 2.43$$

Walls; $LiveV_{W} := 940 \cdot lbf$ Wall Live Load Shear

$$RFV_{W} := \frac{\phi V_{cW} - \gamma_{DC} \cdot DeadV_{W}}{\gamma_{LL} \cdot LiveV_{W}} = 7.08$$

Inventory Rating:

$$RF4axleSI_{MIN} := min\left(RFM_{TS}, RFM_{BS}, RFM_{W}, RFV_{TS}, RFV_{BS}, RFV_{W}\right) = 1.16$$

Operating Rating: $\gamma_{DC} := 1.25$ $\gamma_{LL} := 1.35$

Use corresponding Values that govern Inventory Rating

$$\phi M_{nmin} := \phi M_{nW} = \left(4.068 \cdot 10^{4}\right)\ ft \cdot lbf$$

$$DeadM_{min} := DeadM_{W} = \left(1.631 \cdot 10^{4}\right)\ ft \cdot lbf$$

$$LiveM_{min} := LiveM_{W} = \left(1 \cdot 10^{4}\right)\ ft \cdot lbf$$

$$RF4axleSO := \frac{\phi M_{nmin} - \gamma_{DC} \cdot DeadM_{min}}{\gamma_{LL} \cdot LiveM_{min}} = 1.5$$

5 AXLE SEMI

Inventory Rating: $\gamma_{DC} := 1.25$ $\gamma_{LL} := 1.75$

Moment Top Slab; $LiveM_{TS} := 8360 \cdot ft \cdot lbf$ Top Slab Live Load Moment

$$RFM_{TS} := \frac{\phi M_{nTS} - \gamma_{DC} \cdot DeadM_{TS}}{\gamma_{LL} \cdot LiveM_{TS}} = 2.14$$

Bottom Slab; $LiveM_{BS} := 4870 \cdot ft \cdot lbf$ Bottom Slab Live Load Moment

$$RFM_{BS} := \frac{\phi M_{nBS} - \gamma_{DC} \cdot DeadM_{BS}}{\gamma_{LL} \cdot LiveM_{BS}} = 4.64$$

Walls; $LiveM_{W} := 5460 \cdot ft \cdot lbf$ Wall Live Load Moment

$$RFM_{W} := \frac{\phi M_{nW} - \gamma_{DC} \cdot DeadM_{W}}{\gamma_{LL} \cdot LiveM_{W}} = 2.12$$

Shear

Top Slab;
@0.9d +haunch

$LiveV_{TS} := 2060 \cdot lbf$ Top Slab Live Load Shear

$$RFV_{TS} := \frac{\phi V_{cTS} - \gamma_{DC} \cdot DeadV_{TS}}{\gamma_{LL} \cdot LiveV_{TS}} = 2.68$$

Bottom Slab:

$LiveV_{BS} := 1490 \cdot lbf$ Bottom Slab Live Load Shear

$$RFV_{BS} := \frac{\phi V_{cBS} - \gamma_{DC} \cdot DeadV_{BS}}{\gamma_{LL} \cdot LiveV_{BS}} = 4.85$$

Walls:

$LiveV_{W} := 790 \cdot lbf$ Wall Live Load Shear

$$RFV_{W} := \frac{\phi V_{cW} - \gamma_{DC} \cdot DeadV_{W}}{\gamma_{LL} \cdot LiveV_{W}} = 8.42$$

Inventory Rating:

$$RFsASemiI_{MIN} := min\left(RFM_{TS}, RFM_{BS}, RFM_{W}, RFV_{TS}, RFV_{BS}, RFV_{W}\right) = 2.12$$

Operating Rating:

$\gamma_{DC} := 1.25 \quad \gamma_{LL} := 1.35$

Use corresponding Values
that govern Inventory Rating

$\phi M_{nmin} := \phi M_{nW} = \left(4.068 \cdot 10^{4}\right)\ ft \cdot lbf$

$DeadM_{min} := DeadM_{W} = \left(1.631 \cdot 10^{4}\right)\ ft \cdot lbf$

$LiveM_{min} := LiveM_{W} = \left(5.46 \cdot 10^{3}\right)\ ft \cdot lbf$

$$RF5ASemiO := \frac{\phi M_{nmin} - \gamma_{DC} \cdot DeadM_{min}}{\gamma_{LL} \cdot LiveM_{min}} = 2.75$$

DESIGN LOAD: HL 93, H20, 3SC, 6AXLE STR, 3AXLE STR, 4AXLE STR, 5A SEMI

STATE PROJECT #STP CULV (30): BRIDGE #: 7

LOAD RATING SUMMARY

- HL 93 TRUCK INVENTORY RATING $RFTrI_{MIN} = 1.07$
- HL 93 TRUCK OPERATING RATING $RFTrO = 1.39$
- HL 93 TANDEM INVENTORY RATING $RFTaI_{MIN} = 1.04$
- HL 93 TANDEM OPERATING RATING $RFTaO = 1.35$
- HS20 INVENTORY RATING $RFHS20I_{MIN} = 1.61$
- HS20 OPERATING RATING $RFHS20O = 2.08$
- 3S2 INVENTORY RATING $RF3S2I_{MIN} = 1.92$
- 3S2 OPERATING RATING $RF3S2O = 2.49$
- 6 Axle INVENTORY RATING $RF6axleI_{MIN} = 1.1$
- 6 Axle OPERATING RATING $RF6axleO = 1.43$
- 3 Axle Str. INVENTORY RATING $RF3axleSI_{MIN} = 1.24$
- 3 Axle Str. OPERATING RATING $RF3axleSO = 1.6$
- 4 Axle Str. INVENTORY RATING $RF4axleSI_{MIN} = 1.16$
- 4 Axle Str. OPERATING RATING $RF4axleSO = 1.5$
- 5 Axle Semi INVENTORY RATING $RFsASemiI_{MIN} = 2.12$
- 5 Axle Semi OPERATING RATING $RF5ASemiO = 2.75$

```
**************************************************
*                                                *
*           STAAD.Pro V8i SELECTseries5          *
*           Version  20.07.10.65                 *
*           Proprietary Program of               *
*           Bentley Systems, Inc.                *
*           Date=    JAN 23, 2015                *
*           Time=    11:31: 4                    *
*                                                *
*      USER ID:                                  *
**************************************************
```

```
     1. STAAD PLANE
INPUT FILE: 20x10.STD
     2. START JOB INFORMATION
     3. ENGINEER DATE 19-JAN-15
     4. END JOB INFORMATION
     5. INPUT WIDTH 79
     6. UNIT FEET KIP
     7. JOINT COORDINATES
     8. 1 0 0 0; 2 0 11.16 0; 3 21 0 0; 4 21 11.16 0
     9. MEMBER INCIDENCES
    10. 1 1 2; 2 3 4; 3 1 3; 4 2 4
    11. DEFINE MATERIAL START
    12. ISOTROPIC CONCRETE
    13. E 453600
    14. POISSON 0.17
    15. DENSITY 0.14999
    16. ALPHA 5.5E-006
    17. DAMP 0.05
    18. END DEFINE MATERIAL
    19. MEMBER PROPERTY AMERICAN
    20. 1 2 PRIS YD 1 ZD 1
    21. 3 4 PRIS YD 1.16 ZD 1
    22. CONSTANTS
    23. MATERIAL CONCRETE ALL
    24. SUPPORTS
    25. 1 FIXED BUT MZ
    26. 3 FIXED BUT FX MZ
    27. MEMBER OFFSET
    28. 3 4 START 0.5 0 0
    29. 3 4 END -0.5 0 0
    30. 1 2 START 0 0.58 0
    31. 1 2 END 0 -0.58 0
    32. LOAD 1 LOADTYPE NONE  TITLE LOAD CASE 1 -DEAD LOAD -COVER 4FT
    33. SELFWEIGHT Y -1
    34. MEMBER LOAD
    35. 4 UNI GY -0.508
    36. 3 UNI GY 0.508
    37. LOAD 2 LOADTYPE NONE  TITLE LOAD CASE 2 -MOMENT-TRUCK CASE 1
    38. MEMBER LOAD
```

```
39. 4 UNI GY -0.802 7.571 12.429
40. 3 UNI GY 0.164
41. 4 UNI GY -0.064
42. LOAD 3 LOADTYPE NONE  TITLE LOAD CASE 3 -SHEAR-TRUCK CASE 1
43. MEMBER LOAD
44. 4 UNI GY -0.802 0 4.858
45. 3 UNI GY 0.164
46. 4 UNI GY -0.064
47. LOAD 4 LOADTYPE NONE  TITLE LOAD CASE 4 -M _V -TRUCK CASE 2
48. MEMBER LOAD
49. 4 UNI GY -0.413 0.571 19.429
50. 3 UNI GY 0.328
51. 4 UNI GY -0.064
52. LOAD 5 LOADTYPE LIVE  TITLE LOAD CASE 5 -M-TANDEM
53. MEMBER LOAD
54. 4 UNI GY -0.687 5.571 14.429
55. 3 UNI GY 0.257
56. 4 UNI GY -0.064
57. LOAD 6 LOADTYPE LIVE  TITLE LOAD CASE 6 -V-TANDEM
58. MEMBER LOAD
59. 4 UNI GY -0.687 0 8.858
60. 3 UNI GY 0.257
61. 4 UNI GY -0.064
62. LOAD 7 LOADTYPE NONE  TITLE LOAD CASE 7 -MOMENT-H20  CASE 1
63. MEMBER LOAD
64. 4 UNI GY -0.802 7.571 12.429
65. 3 UNI GY 0.164
66. LOAD 8 LOADTYPE NONE  TITLE LOAD CASE 8 -SHEAR-H20 CASE 1
67. MEMBER LOAD
68. 4 UNI GY -0.802 0 4.858
69. 3 UNI GY 0.164
70. LOAD 9 LOADTYPE NONE  TITLE LOAD CASE 9 -M _V-H20 CASE 2
71. MEMBER LOAD
72. 4 UNI GY -0.258 0.571 19.429
73. 3 UNI GY 0.205
74. LOAD 10 LOADTYPE NONE  TITLE LOAD CASE 10 -M-3SC
75. MEMBER LOAD
76. 4 UNI GY -0.44 5.571 14.156
77. 3 UNI GY 0.164
78. LOAD 11 LOADTYPE NONE  TITLE LOAD CASE 11 -V-3SC
79. MEMBER LOAD
80. 4 UNI GY -0.44 0 8.858
81. 3 UNI GY 0.164
82. LOAD 12 LOADTYPE NONE  TITLE LOAD CASE 12 -MV-3SC
83. MEMBER LOAD
84. 4 UNI GY -0.245
85. 3 UNI GY 0.205
86. LOAD 13 LOADTYPE NONE  TITLE LOAD CASE 13 -M-6 AXLE TRAILER
87. MEMBER LOAD
88. 4 UNI GY -0.568 3.571 16.451
89. 3 UNI GY 0.308
90. LOAD 14 LOADTYPE NONE  TITLE LOAD CASE 14 -V-6 AXLE TRAILER
91. MEMBER LOAD
92. 4 UNI GY -0.568 0 12.858
93. 3 UNI GY 0.308
94. LOAD 15 LOADTYPE NONE  TITLE LOAD CASE 15 -M-3 AXLE STRAIGHT
```

```
 95. MEMBER LOAD
 96. 4 UNI GY -0.659 5.571 14.429
 97. 3 UNI GY 0.246
 98. LOAD 16 LOADTYPE NONE  TITLE LOAD CASE 16 -V-3 AXLE STRAIGHT
 99. MEMBER LOAD
100. 4 UNI GY -0.659 0 8.858
101. 3 UNI GY 0.246
102. LOAD 17 LOADTYPE NONE  TITLE LOAD CASE 17 -M _V-3 AXLE STRAIGHT
103. MEMBER LOAD
104. 4 UNI GY -0.306
105. 3 UNI GY 0.306
106. LOAD 18 LOADTYPE NONE  TITLE LOAD CASE 18 -M-4 AXLE STRAIGHT
107. MEMBER LOAD
108. 4 UNI GY -0.539 3.571 16.429
109. 3 UNI GY 0.293
110. LOAD 19 LOADTYPE NONE  TITLE LOAD CASE 19 -V-4 AXLE STRAIGHT
111. MEMBER LOAD
112. 4 UNI GY -0.539 0 12.858
113. 3 UNI GY 0.293
114. LOAD 20 LOADTYPE NONE  TITLE LOAD CASE 20 -M-5 AXLE SEMI
115. MEMBER LOAD
116. 4 UNI GY -0.389 5.571 14.429
117. 3 UNI GY 0.145
118. LOAD 21 LOADTYPE NONE  TITLE LOAD CASE 21 -V-5 AXLE SEMI
119. MEMBER LOAD
120. 4 UNI GY -0.389 0 8.858
121. 3 UNI GY 0.145
122. LOAD 22 LOADTYPE NONE  TITLE LOAD CASE 22 -M _V-5 AXLE SEMI
123. MEMBER LOAD
124. 4 UNI GY -0.214
125. 3 UNI GY 0.145
126. LOAD 23 LOADTYPE NONE  TITLE LOAD CASE 23 -EMIN
127. MEMBER LOAD
128. 1 TRAP GX 0.286 0.146
129. 2 TRAP GX -0.286 -0.146
130. LOAD 24 LOADTYPE NONE  TITLE LOAD CASE 24 -INSIDE WATER
131. MEMBER LOAD
132. 1 TRAP GX -0.25 0
133. 2 TRAP GX 0.25 0
134. ***
135. LOAD COMB 100 COMBINATION LOAD CASE 100 - 1.0DL+1.0EIN
136. 1 1.0 23 1.0
137. ***
138. LOAD COMB 101 COMBINATION LOAD CASE 101 - TRUCK MOMENT
139. 2 1.0 23 1.0 24 1.0
140. LOAD COMB 102 COMBINATION LOAD CASE 102 - TRUCK SHEAR
141. 3 1.0 23 1.0 24 1.0
142. LOAD COMB 103 COMBINATION LOAD CASE 103 - TRUCK M _V
143. 4 1.0 23 1.0 24 1.0
144. ***
145. LOAD COMB 201 COMBINATION LOAD CASE 201 - TANDEM MOMENT
146. 5 1.0 23 1.0 24 1.0
147. LOAD COMB 202 COMBINATION LOAD CASE 202 - TANDEM SHEAR
148. 6 1.0 23 1.0 24 1.0
149. ***
150. LOAD COMB 301 COMBINATION LOAD CASE 301 - H20 MOMENT
```

```
151. 7 1.0 23 1.0 24 1.0
152. LOAD COMB 302 COMBINATION LOAD CASE 302 - H20 SHEAR
153. 8 1.0 23 1.0 24 1.0
154. LOAD COMB 303 COMBINATION LOAD CASE 303 - H20 M _V
155. 9 1.0 23 1.0 24 1.0
156. ***
157. LOAD COMB 401 COMBINATION LOAD CASE 401 - 3S2 MOMENT
158. 10 1.0 23 1.0 24 1.0
159. LOAD COMB 402 COMBINATION LOAD CASE 402 - 3S2 SHEAR
160. 11 1.0 23 1.0 24 1.0
161. LOAD COMB 403 COMBINATION LOAD CASE 403 - 3S2 M _V
162. 12 1.0 23 1.0 24 1.0
163. ***
164. LOAD COMB 501 COMBINATION LOAD CASE 501 - 6 AXLE TRAILER MOMENT
165. 13 1.0 23 1.0 24 1.0
166. LOAD COMB 502 COMBINATION LOAD CASE 502 - 6 AXLE TRAILER SHEAR
167. 14 1.0 23 1.0 24 1.0
168. ***
169. LOAD COMB 601 COMBINATION LOAD CASE 601 - 3 AXLE STRAIGHT MOMENT
170. 15 1.0 23 1.0 24 1.0
171. LOAD COMB 602 COMBINATION LOAD CASE 602 - 3 AXLE STRAIGHT SHEAR
172. 16 1.0 23 1.0 24 1.0
173. LOAD COMB 603 COMBINATION LOAD CASE 603 - 3 AXLE STRAIGHT MOMENT _SHEAR
174. 17 1.0 23 1.0 24 1.0
175. ***
176. LOAD COMB 701 COMBINATION LOAD CASE 701 - 4 AXLE STRAIGHT MOMENT
177. 18 1.0 23 1.0 24 1.0
178. LOAD COMB 702 COMBINATION LOAD CASE 702 - 4 AXLE STRAIGHT SHEAR
179. 19 1.0 23 1.0 24 1.0
180. ***
181. LOAD COMB 801 COMBINATION LOAD CASE 801 - 5 AXLE SEMI MOMENT
182. 20 1.0 23 1.0 24 1.0
183. LOAD COMB 802 COMBINATION LOAD CASE 802 - 5 AXLE SEMI SHEAR
184. 21 1.0 23 1.0 24 1.0
185. LOAD COMB 803 COMBINATION LOAD CASE 803 - 5 AXLE SEMI M _V
186. 22 1.0 23 1.0 24 1.0
187. PERFORM ANALYSIS


        P R O B L E M   S T A T I S T I C S
        -----------------------------------

  NUMBER OF JOINTS          4  NUMBER OF MEMBERS       4
  NUMBER OF PLATES          0  NUMBER OF SOLIDS        0
  NUMBER OF SURFACES        0  NUMBER OF SUPPORTS      2


       SOLVER USED IS THE OUT-OF-CORE BASIC SOLVER

  ORIGINAL/FINAL BAND-WIDTH=     2/     2/      8 DOF
TOTAL      PRIMARY LOAD CASES =    24, TOTAL DEGREES OF FREEDOM =       9
TOTAL LOAD COMBINATION  CASES =    22  SO FAR.
  SIZE OF STIFFNESS MATRIX =        1 DOUBLE  KILO-WORDS
```

REQRD/AVAIL. DISK SPACE = 12.0/ 0.0 MB

```
188. ***
189. LOAD LIST 100
190. PRINT FORCE ENVELOPE NSECTION 4 ALL
```

MEMBER FORCE ENVELOPE

ALL UNITS ARE KIP FEET

MEMB	DISTANCE		FY	LD	MZ	LD	FZ	LD	MY	LD
1	0.00	MAX	0.21	100	6.44	100	0.00	100	0.00	100
		MIN	0.21	100	6.44	100	0.00	100	0.00	100
	0.83	MAX	-0.02	100	6.36	100	0.00	100	0.00	100
		MIN	-0.02	100	6.36	100	0.00	100	0.00	100
	1.67	MAX	-0.25	100	6.48	100	0.00	100	0.00	100
		MIN	-0.25	100	6.48	100	0.00	100	0.00	100
	2.50	MAX	-0.46	100	6.77	100	0.00	100	0.00	100
		MIN	-0.46	100	6.77	100	0.00	100	0.00	100
	3.33	MAX	-0.67	100	7.24	100	0.00	100	0.00	100
		MIN	-0.67	100	7.24	100	0.00	100	0.00	100
	4.17	MAX	-0.86	100	7.88	100	0.00	100	0.00	100
		MIN	-0.86	100	7.88	100	0.00	100	0.00	100
	5.00	MAX	-1.05	100	8.67	100	0.00	100	0.00	100
		MIN	-1.05	100	8.67	100	0.00	100	0.00	100
	5.83	MAX	-1.22	100	9.62	100	0.00	100	0.00	100
		MIN	-1.22	100	9.62	100	0.00	100	0.00	100
	6.67	MAX	-1.39	100	10.71	100	0.00	100	0.00	100
		MIN	-1.39	100	10.71	100	0.00	100	0.00	100
	7.50	MAX	-1.54	100	11.93	100	0.00	100	0.00	100
		MIN	-1.54	100	11.93	100	0.00	100	0.00	100
	8.33	MAX	-1.69	100	13.27	100	0.00	100	0.00	100
		MIN	-1.69	100	13.27	100	0.00	100	0.00	100
	9.17	MAX	-1.82	100	14.74	100	0.00	100	0.00	100
		MIN	-1.82	100	14.74	100	0.00	100	0.00	100
	10.00	MAX	-1.95	100	16.31	100	0.00	100	0.00	100
		MIN	-1.95	100	16.31	100	0.00	100	0.00	100

MAX/MIN FORCE VALUES FOR MEMB 1, AMONGST ALL SECT LOCATIONS

	FY/ FZ	DIST DIST	LD LD	MZ/ MY	DIST DIST	LD LD	FX	DIST	LD
MAX.	0.21	0.00	100	16.31	10.00	100			
	0.00	0.00	100	0.00	0.00	100	8.32 C	0.00	100
MIN.	-1.95	10.00	100	6.36	0.83	100			
	0.00	10.00	100	0.00	10.00	100	6.82 C	10.00	100

2	0.00	MAX	-0.21	100	-6.44	100	0.00	100	0.00	100
		MIN	-0.21	100	-6.44	100	0.00	100	0.00	100
	0.83	MAX	0.02	100	-6.36	100	0.00	100	0.00	100
		MIN	0.02	100	-6.36	100	0.00	100	0.00	100

1.67	MAX	0.25	100	-6.48	100	0.00	100	0.00	100
	MIN	0.25	100	-6.48	100	0.00	100	0.00	100
2.50	MAX	0.46	100	-6.77	100	0.00	100	0.00	100
	MIN	0.46	100	-6.77	100	0.00	100	0.00	100
3.33	MAX	0.67	100	-7.24	100	0.00	100	0.00	100
	MIN	0.67	100	-7.24	100	0.00	100	0.00	100
4.17	MAX	0.86	100	-7.88	100	0.00	100	0.00	100
	MIN	0.86	100	-7.88	100	0.00	100	0.00	100
5.00	MAX	1.05	100	-8.67	100	0.00	100	0.00	100
	MIN	1.05	100	-8.67	100	0.00	100	0.00	100
5.83	MAX	1.22	100	-9.62	100	0.00	100	0.00	100
	MIN	1.22	100	-9.62	100	0.00	100	0.00	100
6.67	MAX	1.39	100	-10.71	100	0.00	100	0.00	100
	MIN	1.39	100	-10.71	100	0.00	100	0.00	100
7.50	MAX	1.54	100	-11.93	100	0.00	100	0.00	100
	MIN	1.54	100	-11.93	100	0.00	100	0.00	100
8.33	MAX	1.69	100	-13.27	100	0.00	100	0.00	100
	MIN	1.69	100	-13.27	100	0.00	100	0.00	100
9.17	MAX	1.82	100	-14.74	100	0.00	100	0.00	100
	MIN	1.82	100	-14.74	100	0.00	100	0.00	100
10.00	MAX	1.95	100	-16.31	100	0.00	100	0.00	100
	MIN	1.95	100	-16.31	100	0.00	100	0.00	100

MAX/MIN FORCE VALUES FOR MEMB 2, AMONGST ALL SECT LOCATIONS

	FY/ FZ	DIST DIST	LD LD	MZ/ MY	DIST DIST	LD LD	FX	DIST	LD
MAX.	1.95	10.00	100	-6.36	0.83	100			
	0.00	0.00	100	0.00	0.00	100	8.32 C	0.00	100
MIN.	-0.21	0.00	100	-16.31	10.00	100			
	0.00	10.00	100	0.00	10.00	100	6.82 C	10.00	100

3	0.00	MAX	-3.34	100	-4.89	100	0.00	100	0.00	100
		MIN	-3.34	100	-4.89	100	0.00	100	0.00	100
	1.67	MAX	-2.78	100	0.21	100	0.00	100	0.00	100
		MIN	-2.78	100	0.21	100	0.00	100	0.00	100
	3.33	MAX	-2.23	100	4.39	100	0.00	100	0.00	100
		MIN	-2.23	100	4.39	100	0.00	100	0.00	100
	5.00	MAX	-1.67	100	7.64	100	0.00	100	0.00	100
		MIN	-1.67	100	7.64	100	0.00	100	0.00	100
	6.67	MAX	-1.11	100	9.96	100	0.00	100	0.00	100
		MIN	-1.11	100	9.96	100	0.00	100	0.00	100
	8.33	MAX	-0.56	100	11.35	100	0.00	100	0.00	100
		MIN	-0.56	100	11.35	100	0.00	100	0.00	100
	10.00	MAX	0.00	100	11.81	100	0.00	100	0.00	100
		MIN	0.00	100	11.81	100	0.00	100	0.00	100
	11.67	MAX	0.56	100	11.35	100	0.00	100	0.00	100
		MIN	0.56	100	11.35	100	0.00	100	0.00	100
	13.33	MAX	1.11	100	9.96	100	0.00	100	0.00	100
		MIN	1.11	100	9.96	100	0.00	100	0.00	100
	15.00	MAX	1.67	100	7.64	100	0.00	100	0.00	100
		MIN	1.67	100	7.64	100	0.00	100	0.00	100

	16.67	MAX	2.23	100	4.39	100	0.00	100	0.00	100
		MIN	2.23	100	4.39	100	0.00	100	0.00	100
	18.33	MAX	2.78	100	0.21	100	0.00	100	0.00	100
		MIN	2.78	100	0.21	100	0.00	100	0.00	100
	20.00	MAX	3.34	100	-4.89	100	0.00	100	0.00	100
		MIN	3.34	100	-4.89	100	0.00	100	0.00	100

MAX/MIN FORCE VALUES FOR MEMB 3, AMONGST ALL SECT LOCATIONS

	FY/ FZ	DIST DIST	LD LD	MZ/ MY	DIST DIST	LD LD	FX	DIST	LD
MAX.	3.34	20.00	100	11.81	10.00	100			
	0.00	0.00	100	0.00	0.00	100	0.21 C	0.00	100
MIN.	-3.34	0.00	100	-4.89	20.00	100			
	0.00	20.00	100	0.00	20.00	100	0.21 C	20.00	100

4	0.00	MAX	6.82	100	14.03	100	0.00	100	0.00	100
		MIN	6.82	100	14.03	100	0.00	100	0.00	100
	1.67	MAX	5.68	100	3.61	100	0.00	100	0.00	100
		MIN	5.68	100	3.61	100	0.00	100	0.00	100
	3.33	MAX	4.55	100	-4.91	100	0.00	100	0.00	100
		MIN	4.55	100	-4.91	100	0.00	100	0.00	100
	5.00	MAX	3.41	100	-11.54	100	0.00	100	0.00	100
		MIN	3.41	100	-11.54	100	0.00	100	0.00	100
	6.67	MAX	2.27	100	-16.28	100	0.00	100	0.00	100
		MIN	2.27	100	-16.28	100	0.00	100	0.00	100
	8.33	MAX	1.14	100	-19.12	100	0.00	100	0.00	100
		MIN	1.14	100	-19.12	100	0.00	100	0.00	100
	10.00	MAX	0.00	100	-20.07	100	0.00	100	0.00	100
		MIN	0.00	100	-20.07	100	0.00	100	0.00	100
	11.67	MAX	-1.14	100	-19.12	100	0.00	100	0.00	100
		MIN	-1.14	100	-19.12	100	0.00	100	0.00	100
	13.33	MAX	-2.27	100	-16.28	100	0.00	100	0.00	100
		MIN	-2.27	100	-16.28	100	0.00	100	0.00	100
	15.00	MAX	-3.41	100	-11.54	100	0.00	100	0.00	100
		MIN	-3.41	100	-11.54	100	0.00	100	0.00	100
	16.67	MAX	-4.55	100	-4.91	100	0.00	100	0.00	100
		MIN	-4.55	100	-4.91	100	0.00	100	0.00	100
	18.33	MAX	-5.68	100	3.61	100	0.00	100	0.00	100
		MIN	-5.68	100	3.61	100	0.00	100	0.00	100
	20.00	MAX	-6.82	100	14.03	100	0.00	100	0.00	100
		MIN	-6.82	100	14.03	100	0.00	100	0.00	100

MAX/MIN FORCE VALUES FOR MEMB 4, AMONGST ALL SECT LOCATIONS

	FY/ FZ	DIST DIST	LD LD	MZ/ MY	DIST DIST	LD LD	FX	DIST	LD

```
| MAX.      6.82   0.00  100     14.03   0.00  100
|           0.00   0.00  100      0.00   0.00  100     1.95 C   0.00  100
| MIN.     -6.82  20.00  100    -20.07  10.00  100
|           0.00  20.00  100      0.00  20.00  100     1.95 C  20.00  100
|-----------------------------------------------------------------------------
```

********** END OF FORCE ENVELOPE FROM INTERNAL STORAGE **********

```
191. LOAD LIST 101 TO 103
192. PRINT FORCE ENVELOPE NSECTION 4 ALL
```

MEMBER FORCE ENVELOPE

ALL UNITS ARE KIP FEET

MEMB	DISTANCE		FY	LD	MZ	LD	FZ	LD	MY	LD
1	0.00	MAX	0.29	102	6.79	103	0.00	103	0.00	103
		MIN	-0.12	101	3.16	101	0.00	103	0.00	103
	0.83	MAX	0.25	102	6.84	103	0.00	103	0.00	103
		MIN	-0.16	101	3.27	101	0.00	103	0.00	103
	1.67	MAX	0.21	102	6.91	103	0.00	103	0.00	103
		MIN	-0.20	101	3.42	101	0.00	103	0.00	103
	2.50	MAX	0.16	102	7.03	103	0.00	103	0.00	103
		MIN	-0.25	101	3.56	102	0.00	103	0.00	103
	3.33	MAX	0.11	102	7.19	103	0.00	103	0.00	103
		MIN	-0.30	101	3.45	102	0.00	103	0.00	103
	4.17	MAX	0.04	102	7.39	103	0.00	103	0.00	103
		MIN	-0.37	101	3.39	102	0.00	103	0.00	103
	5.00	MAX	-0.03	102	7.66	103	0.00	103	0.00	103
		MIN	-0.44	101	3.38	102	0.00	103	0.00	103
	5.83	MAX	-0.11	102	7.99	103	0.00	103	0.00	103
		MIN	-0.52	101	3.44	102	0.00	103	0.00	103
	6.67	MAX	-0.20	102	8.39	103	0.00	103	0.00	103
		MIN	-0.61	101	3.57	102	0.00	103	0.00	103
	7.50	MAX	-0.29	102	8.86	103	0.00	103	0.00	103
		MIN	-0.70	101	3.77	102	0.00	103	0.00	103
	8.33	MAX	-0.40	102	9.42	103	0.00	103	0.00	103
		MIN	-0.81	101	4.06	102	0.00	103	0.00	103
	9.17	MAX	-0.51	102	10.07	103	0.00	103	0.00	103
		MIN	-0.92	101	4.43	102	0.00	103	0.00	103
	10.00	MAX	-0.62	102	10.81	103	0.00	103	0.00	103
		MIN	-1.03	101	4.90	102	0.00	103	0.00	103

MAX/MIN FORCE VALUES FOR MEMB 1, AMONGST ALL SECT LOCATIONS

	FY/ FZ	DIST DIST	LD LD	MZ/ MY	DIST DIST	LD LD	FX	DIST	LD
MAX.	0.29	0.00	102	10.81	10.00	103			
	0.00	0.00	101	0.00	0.00	101	4.53 C	0.00	103
MIN.	-1.03	10.00	101	3.16	0.00	101			
	0.00	10.00	103	0.00	10.00	103	2.59 C	10.00	101

2	0.00	MAX	0.12	101	-3.15	102	0.00	103	0.00	103
		MIN	-0.29	102	-6.79	103	0.00	103	0.00	103
	0.83	MAX	0.16	101	-2.92	102	0.00	103	0.00	103
		MIN	-0.25	102	-6.84	103	0.00	103	0.00	103

	16.67	MAX	2.19	103	3.98	103	0.00	103	0.00	103
		MIN	1.05	102	1.88	102	0.00	103	0.00	103
	18.33	MAX	2.73	103	0.24	101	0.00	103	0.00	103
		MIN	1.32	102	-0.12	103	0.00	103	0.00	103
	20.00	MAX	3.28	103	-2.27	101	0.00	103	0.00	103
		MIN	1.59	102	-5.13	103	0.00	103	0.00	103

MAX/MIN FORCE VALUES FOR MEMB 3, AMONGST ALL SECT LOCATIONS

	FY/ FZ	DIST DIST	LD LD	MZ/ MY	DIST DIST	LD LD	FX	DIST	LD
MAX.	3.28	20.00	103	11.27	10.00	103			
	0.00	0.00	101	0.00	0.00	101	0.29 C	0.00	102
MIN.	-3.28	0.00	103	-5.13	20.00	103			
	0.00	20.00	103	0.00	20.00	103	0.12 T	20.00	101

4	0.00	MAX	4.53	103	9.09	103	0.00	103	0.00	103
		MIN	2.59	101	3.25	102	0.00	103	0.00	103
	1.67	MAX	3.97	103	3.11	101	0.00	103	0.00	103
		MIN	2.48	101	-2.28	102	0.00	103	0.00	103
	3.33	MAX	3.18	103	-0.94	101	0.00	103	0.00	103
		MIN	1.15	102	-5.41	102	0.00	103	0.00	103
	5.00	MAX	2.38	103	-4.81	101	0.00	103	0.00	103
		MIN	-0.18	102	-8.73	103	0.00	103	0.00	103
	6.67	MAX	2.16	101	-5.75	102	0.00	103	0.00	103
		MIN	-0.28	102	-12.04	103	0.00	103	0.00	103
	8.33	MAX	1.44	101	-5.19	102	0.00	103	0.00	103
		MIN	-0.39	102	-14.03	103	0.00	103	0.00	103
	10.00	MAX	0.00	103	-4.46	102	0.00	103	0.00	103
		MIN	-0.50	102	-14.69	103	0.00	103	0.00	103
	11.67	MAX	-0.60	102	-3.54	102	0.00	103	0.00	103
		MIN	-1.44	101	-14.03	103	0.00	103	0.00	103
	13.33	MAX	-0.71	102	-2.45	102	0.00	103	0.00	103
		MIN	-2.16	101	-12.04	103	0.00	103	0.00	103
	15.00	MAX	-0.82	102	-1.17	102	0.00	103	0.00	103
		MIN	-2.38	103	-8.73	103	0.00	103	0.00	103
	16.67	MAX	-0.92	102	0.27	102	0.00	103	0.00	103
		MIN	-3.18	103	-4.09	103	0.00	103	0.00	103
	18.33	MAX	-1.03	102	3.11	101	0.00	103	0.00	103
		MIN	-3.97	103	1.87	103	0.00	103	0.00	103
	20.00	MAX	-1.14	102	9.09	103	0.00	103	0.00	103
		MIN	-4.53	103	3.71	102	0.00	103	0.00	103

MAX/MIN FORCE VALUES FOR MEMB 4, AMONGST ALL SECT LOCATIONS

FY/ FZ	DIST DIST	LD LD	MZ/ MY	DIST DIST	LD LD	FX	DIST	LD

MAX.	4.53	0.00	103	9.09	0.00	103			
	0.00	0.00	101	0.00	0.00	101	1.03 C	0.00	101
MIN.	-4.53	20.00	103	-14.69	10.00	103			
	0.00	20.00	103	0.00	20.00	103	0.62 C	20.00	102

********** END OF FORCE ENVELOPE FROM INTERNAL STORAGE **********

193. LOAD LIST 201 202
194. PRINT FORCE ENVELOPE NSECTION 4 ALL

MEMBER FORCE ENVELOPE

ALL UNITS ARE KIP FEET

MEMB	DISTANCE		FY	LD	MZ	LD	FZ	LD	MY	LD
1	0.00	MAX	0.10	202	6.15	202	0.00	202	0.00	202
		MIN	-0.25	201	5.02	201	0.00	202	0.00	202
	0.83	MAX	0.07	202	6.08	202	0.00	202	0.00	202
		MIN	-0.28	201	5.23	201	0.00	202	0.00	202
	1.67	MAX	0.03	202	6.04	202	0.00	202	0.00	202
		MIN	-0.32	201	5.48	201	0.00	202	0.00	202
	2.50	MAX	-0.02	202	6.04	202	0.00	202	0.00	202
		MIN	-0.37	201	5.77	201	0.00	202	0.00	202
	3.33	MAX	-0.08	202	6.10	201	0.00	202	0.00	202
		MIN	-0.43	201	6.08	202	0.00	202	0.00	202
	4.17	MAX	-0.14	202	6.48	201	0.00	202	0.00	202
		MIN	-0.49	201	6.17	202	0.00	202	0.00	202
	5.00	MAX	-0.22	202	6.92	201	0.00	202	0.00	202
		MIN	-0.56	201	6.32	202	0.00	202	0.00	202
	5.83	MAX	-0.30	202	7.42	201	0.00	202	0.00	202
		MIN	-0.64	201	6.54	202	0.00	202	0.00	202
	6.67	MAX	-0.38	202	8.00	201	0.00	202	0.00	202
		MIN	-0.73	201	6.82	202	0.00	202	0.00	202
	7.50	MAX	-0.48	202	8.64	201	0.00	202	0.00	202
		MIN	-0.82	201	7.18	202	0.00	202	0.00	202
	8.33	MAX	-0.58	202	9.37	201	0.00	202	0.00	202
		MIN	-0.93	201	7.62	202	0.00	202	0.00	202
	9.17	MAX	-0.69	202	10.19	201	0.00	202	0.00	202
		MIN	-1.04	201	8.14	202	0.00	202	0.00	202
	10.00	MAX	-0.81	202	11.10	201	0.00	202	0.00	202
		MIN	-1.16	201	8.77	202	0.00	202	0.00	202

MAX/MIN FORCE VALUES FOR MEMB 1, AMONGST ALL SECT LOCATIONS

	FY/ FZ	DIST DIST	LD LD	MZ/ MY	DIST DIST	LD LD	FX	DIST	LD
MAX.	0.10	0.00	202	11.10	10.00	201			
	0.00	0.00	201	0.00	0.00	201	5.37 C	0.00	202
MIN.	-1.16	10.00	201	5.02	0.00	201			
	0.00	10.00	202	0.00	10.00	202	3.68 C	10.00	201

2	0.00	MAX	0.25	201	-4.70	202	0.00	202	0.00	202
		MIN	-0.10	202	-5.02	201	0.00	202	0.00	202
	0.83	MAX	0.28	201	-4.63	202	0.00	202	0.00	202
		MIN	-0.07	202	-5.23	201	0.00	202	0.00	202

1.67	MAX	0.32	201	-4.59	202	0.00	202	0.00	202
	MIN	-0.03	202	-5.48	201	0.00	202	0.00	202
2.50	MAX	0.37	201	-4.59	202	0.00	202	0.00	202
	MIN	0.02	202	-5.77	201	0.00	202	0.00	202
3.33	MAX	0.43	201	-4.63	202	0.00	202	0.00	202
	MIN	0.08	202	-6.10	201	0.00	202	0.00	202
4.17	MAX	0.49	201	-4.72	202	0.00	202	0.00	202
	MIN	0.14	202	-6.48	201	0.00	202	0.00	202
5.00	MAX	0.56	201	-4.87	202	0.00	202	0.00	202
	MIN	0.22	202	-6.92	201	0.00	202	0.00	202
5.83	MAX	0.64	201	-5.08	202	0.00	202	0.00	202
	MIN	0.30	202	-7.42	201	0.00	202	0.00	202
6.67	MAX	0.73	201	-5.36	202	0.00	202	0.00	202
	MIN	0.38	202	-8.00	201	0.00	202	0.00	202
7.50	MAX	0.82	201	-5.72	202	0.00	202	0.00	202
	MIN	0.48	202	-8.64	201	0.00	202	0.00	202
8.33	MAX	0.93	201	-6.16	202	0.00	202	0.00	202
	MIN	0.58	202	-9.37	201	0.00	202	0.00	202
9.17	MAX	1.04	201	-6.69	202	0.00	202	0.00	202
	MIN	0.69	202	-10.19	201	0.00	202	0.00	202
10.00	MAX	1.16	201	-7.31	202	0.00	202	0.00	202
	MIN	0.81	202	-11.10	201	0.00	202	0.00	202

MAX/MIN FORCE VALUES FOR MEMB 2, AMONGST ALL SECT LOCATIONS

	FY/ FZ	DIST DIST	LD LD	MZ/ MY	DIST DIST	LD LD	FX	DIST	LD
MAX.	1.16	10.00	201	-4.59	2.50	202			
	0.00	0.00	201	0.00	0.00	201	3.68 C	0.00	201
MIN.	-0.10	0.00	202	-11.10	10.00	201			
	0.00	10.00	202	0.00	10.00	202	2.00 C	10.00	202

3	0.00	MAX	-2.57	201	-3.59	201	0.00	202	0.00	202
		MIN	-2.64	202	-4.89	202	0.00	202	0.00	202
	1.67	MAX	-2.14	201	0.34	201	0.00	202	0.00	202
		MIN	-2.21	202	-0.85	202	0.00	202	0.00	202
	3.33	MAX	-1.71	201	3.55	201	0.00	202	0.00	202
		MIN	-1.78	202	2.48	202	0.00	202	0.00	202
	5.00	MAX	-1.28	201	6.05	201	0.00	202	0.00	202
		MIN	-1.35	202	5.09	202	0.00	202	0.00	202
	6.67	MAX	-0.86	201	7.83	201	0.00	202	0.00	202
		MIN	-0.93	202	6.99	202	0.00	202	0.00	202
	8.33	MAX	-0.43	201	8.90	201	0.00	202	0.00	202
		MIN	-0.50	202	8.18	202	0.00	202	0.00	202
	10.00	MAX	0.00	201	9.26	201	0.00	202	0.00	202
		MIN	-0.07	202	8.65	202	0.00	202	0.00	202
	11.67	MAX	0.43	201	8.90	201	0.00	202	0.00	202
		MIN	0.36	202	8.41	202	0.00	202	0.00	202
	13.33	MAX	0.86	201	7.83	201	0.00	202	0.00	202
		MIN	0.79	202	7.45	202	0.00	202	0.00	202
	15.00	MAX	1.28	201	6.05	201	0.00	202	0.00	202
		MIN	1.22	202	5.78	202	0.00	202	0.00	202

16.67	MAX	1.71	201	3.55	201	0.00	202	0.00	202
	MIN	1.64	202	3.40	202	0.00	202	0.00	202
18.33	MAX	2.14	201	0.34	201	0.00	202	0.00	202
	MIN	2.07	202	0.30	202	0.00	202	0.00	202
20.00	MAX	2.57	201	-3.51	202	0.00	202	0.00	202
	MIN	2.50	202	-3.59	201	0.00	202	0.00	202

MAX/MIN FORCE VALUES FOR MEMB 3, AMONGST ALL SECT LOCATIONS

	FY/ FZ	DIST DIST	LD LD	MZ/ MY	DIST DIST	LD LD	FX	DIST	LD
MAX.	2.57	20.00	201	9.26	10.00	201			
	0.00	0.00	201	0.00	0.00	201	0.10 C	0.00	202
MIN.	-2.64	0.00	202	-4.89	0.00	202			
	0.00	20.00	202	0.00	20.00	202	0.25 T	20.00	201

4	0.00	MAX	5.37	202	9.93	201	0.00	202	0.00	202
		MIN	3.68	201	6.55	202	0.00	202	0.00	202
	1.67	MAX	4.11	202	3.88	201	0.00	202	0.00	202
		MIN	3.58	201	-1.35	202	0.00	202	0.00	202
	3.33	MAX	3.47	201	-1.99	201	0.00	202	0.00	202
		MIN	2.86	202	-7.16	202	0.00	202	0.00	202
	5.00	MAX	3.36	201	-7.68	201	0.00	202	0.00	202
		MIN	1.61	202	-10.89	202	0.00	202	0.00	202
	6.67	MAX	2.50	201	-12.53	202	0.00	202	0.00	202
		MIN	0.36	202	-12.78	201	0.00	202	0.00	202
	8.33	MAX	1.25	201	-12.09	202	0.00	202	0.00	202
		MIN	-0.89	202	-15.91	201	0.00	202	0.00	202
	10.00	MAX	0.00	201	-10.01	202	0.00	202	0.00	202
		MIN	-1.36	202	-16.96	201	0.00	202	0.00	202
	11.67	MAX	-1.25	201	-7.65	202	0.00	202	0.00	202
		MIN	-1.47	202	-15.91	201	0.00	202	0.00	202
	13.33	MAX	-1.57	202	-5.12	202	0.00	202	0.00	202
		MIN	-2.50	201	-12.78	201	0.00	202	0.00	202
	15.00	MAX	-1.68	202	-2.41	202	0.00	202	0.00	202
		MIN	-3.36	201	-7.68	201	0.00	202	0.00	202
	16.67	MAX	-1.79	202	0.48	202	0.00	202	0.00	202
		MIN	-3.47	201	-1.99	201	0.00	202	0.00	202
	18.33	MAX	-1.89	202	3.88	201	0.00	202	0.00	202
		MIN	-3.58	201	3.54	202	0.00	202	0.00	202
	20.00	MAX	-2.00	202	9.93	201	0.00	202	0.00	202
		MIN	-3.68	201	6.78	202	0.00	202	0.00	202

MAX/MIN FORCE VALUES FOR MEMB 4, AMONGST ALL SECT LOCATIONS

FY/ FZ	DIST DIST	LD LD	MZ/ MY	DIST DIST	LD LD	FX	DIST	LD

MAX.	5.37	0.00	202	9.93	0.00	201			
	0.00	0.00	201	0.00	0.00	201	1.16 C	0.00	201
MIN.	-3.68	20.00	201	-16.96	10.00	201			
	0.00	20.00	202	0.00	20.00	202	0.81 C	20.00	202

********** END OF FORCE ENVELOPE FROM INTERNAL STORAGE **********

195. LOAD LIST 301 TO 303
196. PRINT FORCE ENVELOPE NSECTION 4 ALL

MEMBER FORCE ENVELOPE

ALL UNITS ARE KIP FEET

MEMB	DISTANCE		FY	LD	MZ	LD	FZ	LD	MY	LD
1	0.00	MAX	0.47	302	4.46	303	0.00	303	0.00	303
		MIN	0.06	301	3.37	301	0.00	303	0.00	303
	0.83	MAX	0.43	302	4.28	303	0.00	303	0.00	303
		MIN	0.02	301	3.34	301	0.00	303	0.00	303
	1.67	MAX	0.39	302	4.14	303	0.00	303	0.00	303
		MIN	-0.02	301	3.34	301	0.00	303	0.00	303
	2.50	MAX	0.34	302	4.03	303	0.00	303	0.00	303
		MIN	-0.07	301	3.33	302	0.00	303	0.00	303
	3.33	MAX	0.29	302	3.97	303	0.00	303	0.00	303
		MIN	-0.12	301	3.06	302	0.00	303	0.00	303
	4.17	MAX	0.22	302	3.95	303	0.00	303	0.00	303
		MIN	-0.19	301	2.85	302	0.00	303	0.00	303
	5.00	MAX	0.15	302	4.00	303	0.00	303	0.00	303
		MIN	-0.26	301	2.69	302	0.00	303	0.00	303
	5.83	MAX	0.07	302	4.11	303	0.00	303	0.00	303
		MIN	-0.34	301	2.60	302	0.00	303	0.00	303
	6.67	MAX	-0.02	302	4.34	301	0.00	303	0.00	303
		MIN	-0.43	301	2.58	302	0.00	303	0.00	303
	7.50	MAX	-0.11	302	4.73	301	0.00	303	0.00	303
		MIN	-0.52	301	2.63	302	0.00	303	0.00	303
	8.33	MAX	-0.21	302	5.21	301	0.00	303	0.00	303
		MIN	-0.63	301	2.77	302	0.00	303	0.00	303
	9.17	MAX	-0.32	302	5.78	301	0.00	303	0.00	303
		MIN	-0.74	301	2.99	302	0.00	303	0.00	303
	10.00	MAX	-0.44	302	6.44	301	0.00	303	0.00	303
		MIN	-0.85	301	3.31	302	0.00	303	0.00	303

MAX/MIN FORCE VALUES FOR MEMB 1, AMONGST ALL SECT LOCATIONS

	FY/ FZ	DIST DIST	LD LD	MZ/ MY	DIST DIST	LD LD	FX	DIST	LD
MAX.	0.47	0.00	302	6.44	10.00	301			
	0.00	0.00	301	0.00	0.00	301	3.40 C	0.00	302
MIN.	-0.85	10.00	301	2.58	6.67	302			
	0.00	10.00	303	0.00	10.00	303	1.95 C	10.00	301

2	0.00	MAX	-0.06	301	-3.36	302	0.00	303	0.00	303
		MIN	-0.47	302	-4.46	303	0.00	303	0.00	303
	0.83	MAX	-0.02	301	-2.99	302	0.00	303	0.00	303
		MIN	-0.43	302	-4.28	303	0.00	303	0.00	303

1.67	MAX	0.02	301	-2.64	302	0.00	303	0.00	303
	MIN	-0.39	302	-4.14	303	0.00	303	0.00	303
2.50	MAX	0.07	301	-2.33	302	0.00	303	0.00	303
	MIN	-0.34	302	-4.03	303	0.00	303	0.00	303
3.33	MAX	0.12	301	-2.07	302	0.00	303	0.00	303
	MIN	-0.29	302	-3.97	303	0.00	303	0.00	303
4.17	MAX	0.19	301	-1.86	302	0.00	303	0.00	303
	MIN	-0.22	302	-3.95	303	0.00	303	0.00	303
5.00	MAX	0.26	301	-1.70	302	0.00	303	0.00	303
	MIN	-0.15	302	-4.00	303	0.00	303	0.00	303
5.83	MAX	0.34	301	-1.61	302	0.00	303	0.00	303
	MIN	-0.07	302	-4.11	303	0.00	303	0.00	303
6.67	MAX	0.43	301	-1.59	302	0.00	303	0.00	303
	MIN	0.02	302	-4.34	301	0.00	303	0.00	303
7.50	MAX	0.52	301	-1.64	302	0.00	303	0.00	303
	MIN	0.11	302	-4.73	301	0.00	303	0.00	303
8.33	MAX	0.63	301	-1.78	302	0.00	303	0.00	303
	MIN	0.21	302	-5.21	301	0.00	303	0.00	303
9.17	MAX	0.74	301	-2.00	302	0.00	303	0.00	303
	MIN	0.32	302	-5.78	301	0.00	303	0.00	303
10.00	MAX	0.85	301	-2.32	302	0.00	303	0.00	303
	MIN	0.44	302	-6.44	301	0.00	303	0.00	303

MAX/MIN FORCE VALUES FOR MEMB 2, AMONGST ALL SECT LOCATIONS

	FY/ FZ	DIST DIST	LD LD	MZ/ MY	DIST DIST	LD LD	FX	DIST	LD
MAX.	0.85	10.00	301	-1.59	6.67	302			
	0.00	0.00	301	0.00	0.00	301	2.43 C	0.00	303
MIN.	-0.47	0.00	302	-6.44	10.00	301			
	0.00	10.00	303	0.00	10.00	303	0.50 C	10.00	302

3	0.00	MAX	-1.64	301	-2.58	301	0.00	303	0.00	303
		MIN	-2.05	303	-3.78	302	0.00	303	0.00	303
	1.67	MAX	-1.37	301	-0.08	301	0.00	303	0.00	303
		MIN	-1.71	303	-1.20	302	0.00	303	0.00	303
	3.33	MAX	-1.09	301	2.13	303	0.00	303	0.00	303
		MIN	-1.37	303	0.93	302	0.00	303	0.00	303
	5.00	MAX	-0.82	301	4.13	303	0.00	303	0.00	303
		MIN	-1.02	303	2.61	302	0.00	303	0.00	303
	6.67	MAX	-0.55	301	5.55	303	0.00	303	0.00	303
		MIN	-0.68	303	3.82	302	0.00	303	0.00	303
	8.33	MAX	-0.27	301	6.40	303	0.00	303	0.00	303
		MIN	-0.34	303	4.59	302	0.00	303	0.00	303
	10.00	MAX	0.00	303	6.69	303	0.00	303	0.00	303
		MIN	-0.05	302	4.89	302	0.00	303	0.00	303
	11.67	MAX	0.34	303	6.40	303	0.00	303	0.00	303
		MIN	0.23	302	4.74	302	0.00	303	0.00	303
	13.33	MAX	0.68	303	5.55	303	0.00	303	0.00	303
		MIN	0.50	302	4.14	302	0.00	303	0.00	303
	15.00	MAX	1.03	303	4.13	303	0.00	303	0.00	303
		MIN	0.77	302	3.08	302	0.00	303	0.00	303

16.67	MAX	1.37	303	2.13	303	0.00	303	0.00	303
	MIN	1.05	302	1.56	302	0.00	303	0.00	303
18.33	MAX	1.71	303	-0.08	301	0.00	303	0.00	303
	MIN	1.32	302	-0.43	303	0.00	303	0.00	303
20.00	MAX	2.05	303	-2.58	301	0.00	303	0.00	303
	MIN	1.59	302	-3.56	303	0.00	303	0.00	303

MAX/MIN FORCE VALUES FOR MEMB 3, AMONGST ALL SECT LOCATIONS

	FY/ FZ	DIST DIST	LD LD	MZ/ MY	DIST DIST	LD LD	FX	DIST	LD
MAX.	2.05	20.00	303	6.69	10.00	303			
	0.00	0.00	301	0.00	0.00	301	0.47 C	0.00	302
MIN.	-2.05	0.00	303	-3.78	0.00	302			
	0.00	20.00	303	0.00	20.00	303	0.06 C	20.00	301

4	0.00	MAX	3.40	302	5.96	301	0.00	303	0.00	303
		MIN	1.95	301	1.87	302	0.00	303	0.00	303
	1.67	MAX	2.15	303	2.71	301	0.00	303	0.00	303
		MIN	1.95	301	-2.68	302	0.00	303	0.00	303
	3.33	MAX	1.95	301	-0.53	301	0.00	303	0.00	303
		MIN	0.73	302	-5.01	302	0.00	303	0.00	303
	5.00	MAX	1.95	301	-3.78	301	0.00	303	0.00	303
		MIN	-0.50	302	-5.11	302	0.00	303	0.00	303
	6.67	MAX	1.95	301	-4.29	302	0.00	303	0.00	303
		MIN	-0.50	302	-7.03	301	0.00	303	0.00	303
	8.33	MAX	1.34	301	-3.46	302	0.00	303	0.00	303
		MIN	-0.50	302	-10.04	301	0.00	303	0.00	303
	10.00	MAX	0.00	303	-2.63	302	0.00	303	0.00	303
		MIN	-0.50	302	-11.16	301	0.00	303	0.00	303
	11.67	MAX	-0.43	303	-1.80	302	0.00	303	0.00	303
		MIN	-1.34	301	-10.04	301	0.00	303	0.00	303
	13.33	MAX	-0.50	302	-0.98	302	0.00	303	0.00	303
		MIN	-1.95	301	-7.03	301	0.00	303	0.00	303
	15.00	MAX	-0.50	302	-0.15	302	0.00	303	0.00	303
		MIN	-1.95	301	-4.64	303	0.00	303	0.00	303
	16.67	MAX	-0.50	302	0.68	302	0.00	303	0.00	303
		MIN	-1.95	301	-2.13	303	0.00	303	0.00	303
	18.33	MAX	-0.50	302	2.71	301	0.00	303	0.00	303
		MIN	-2.15	303	1.10	303	0.00	303	0.00	303
	20.00	MAX	-0.50	302	5.96	301	0.00	303	0.00	303
		MIN	-2.43	303	2.33	302	0.00	303	0.00	303

MAX/MIN FORCE VALUES FOR MEMB 4, AMONGST ALL SECT LOCATIONS

FY/ FZ	DIST DIST	LD LD	MZ/ MY	DIST DIST	LD LD	FX	DIST	LD

MAX.	3.40	0.00	302	5.96	0.00	301			
	0.00	0.00	301	0.00	0.00	301	0.85 C	0.00	301
MIN.	-2.43	20.00	303	-11.16	10.00	301			
	0.00	20.00	303	0.00	20.00	303	0.44 C	20.00	302

********** END OF FORCE ENVELOPE FROM INTERNAL STORAGE **********

197. LOAD LIST 401 TO 403
198. PRINT FORCE ENVELOPE NSECTION 4 ALL

MEMBER FORCE ENVELOPE

ALL UNITS ARE KIP FEET

MEMB	DISTANCE		FY	LD	MZ	LD	FZ	LD	MY	LD
1	0.00	MAX	0.31	402	4.49	403	0.00	403	0.00	403
		MIN	0.11	401	3.45	401	0.00	403	0.00	403
	0.83	MAX	0.28	402	4.29	403	0.00	403	0.00	403
		MIN	0.08	401	3.37	401	0.00	403	0.00	403
	1.67	MAX	0.24	402	4.12	403	0.00	403	0.00	403
		MIN	0.03	401	3.33	401	0.00	403	0.00	403
	2.50	MAX	0.19	402	3.99	403	0.00	403	0.00	403
		MIN	-0.02	401	3.32	401	0.00	403	0.00	403
	3.33	MAX	0.13	402	3.91	403	0.00	403	0.00	403
		MIN	-0.07	401	3.35	401	0.00	403	0.00	403
	4.17	MAX	0.07	402	3.87	403	0.00	403	0.00	403
		MIN	-0.14	401	3.28	402	0.00	403	0.00	403
	5.00	MAX	-0.01	402	3.89	403	0.00	403	0.00	403
		MIN	-0.21	401	3.26	402	0.00	403	0.00	403
	5.83	MAX	-0.09	402	3.98	403	0.00	403	0.00	403
		MIN	-0.29	401	3.30	402	0.00	403	0.00	403
	6.67	MAX	-0.17	402	4.13	403	0.00	403	0.00	403
		MIN	-0.38	401	3.40	402	0.00	403	0.00	403
	7.50	MAX	-0.27	402	4.42	401	0.00	403	0.00	403
		MIN	-0.47	401	3.59	402	0.00	403	0.00	403
	8.33	MAX	-0.37	402	4.85	401	0.00	403	0.00	403
		MIN	-0.57	401	3.85	402	0.00	403	0.00	403
	9.17	MAX	-0.48	402	5.37	401	0.00	403	0.00	403
		MIN	-0.68	401	4.21	402	0.00	403	0.00	403
	10.00	MAX	-0.60	402	5.99	401	0.00	403	0.00	403
		MIN	-0.80	401	4.66	402	0.00	403	0.00	403

MAX/MIN FORCE VALUES FOR MEMB 1, AMONGST ALL SECT LOCATIONS

	FY/ FZ	DIST DIST	LD LD	MZ/ MY	DIST DIST	LD LD	FX	DIST	LD
MAX.	0.31	0.00	402	5.99	10.00	401			
	0.00	0.00	401	0.00	0.00	401	3.03 C	0.00	402
MIN.	-0.80	10.00	401	3.26	5.00	402			
	0.00	10.00	403	0.00	10.00	403	1.91 C	10.00	401

2	0.00	MAX	-0.11	401	-3.21	402	0.00	403	0.00	403
		MIN	-0.31	402	-4.49	403	0.00	403	0.00	403
	0.83	MAX	-0.08	401	-2.96	402	0.00	403	0.00	403
		MIN	-0.28	402	-4.29	403	0.00	403	0.00	403

1.67	MAX	-0.03	401	-2.75	402	0.00	403	0.00	403
	MIN	-0.24	402	-4.12	403	0.00	403	0.00	403
2.50	MAX	0.02	401	-2.57	402	0.00	403	0.00	403
	MIN	-0.19	402	-3.99	403	0.00	403	0.00	403
3.33	MAX	0.07	401	-2.44	402	0.00	403	0.00	403
	MIN	-0.13	402	-3.91	403	0.00	403	0.00	403
4.17	MAX	0.14	401	-2.35	402	0.00	403	0.00	403
	MIN	-0.07	402	-3.87	403	0.00	403	0.00	403
5.00	MAX	0.21	401	-2.33	402	0.00	403	0.00	403
	MIN	0.01	402	-3.89	403	0.00	403	0.00	403
5.83	MAX	0.29	401	-2.37	402	0.00	403	0.00	403
	MIN	0.09	402	-3.98	403	0.00	403	0.00	403
6.67	MAX	0.38	401	-2.47	402	0.00	403	0.00	403
	MIN	0.17	402	-4.13	403	0.00	403	0.00	403
7.50	MAX	0.47	401	-2.66	402	0.00	403	0.00	403
	MIN	0.27	402	-4.38	401	0.00	403	0.00	403
8.33	MAX	0.57	401	-2.92	402	0.00	403	0.00	403
	MIN	0.37	402	-4.82	401	0.00	403	0.00	403
9.17	MAX	0.68	401	-3.28	402	0.00	403	0.00	403
	MIN	0.48	402	-5.34	401	0.00	403	0.00	403
10.00	MAX	0.80	401	-3.73	402	0.00	403	0.00	403
	MIN	0.60	402	-5.96	401	0.00	403	0.00	403

MAX/MIN FORCE VALUES FOR MEMB 2, AMONGST ALL SECT LOCATIONS

	FY/ FZ	DIST DIST	LD LD	MZ/ MY	DIST DIST	LD LD	FX	DIST	LD
MAX.	0.80	10.00	401	-2.33	5.00	402			
	0.00	0.00	401	0.00	0.00	401	2.45 C	0.00	403
MIN.	-0.31	0.00	402	-5.96	10.00	401			
	0.00	10.00	403	0.00	10.00	403	0.87 C	10.00	402

3	0.00	MAX	-1.64	401	-2.69	401	0.00	403	0.00	403
		MIN	-2.05	403	-3.61	403	0.00	403	0.00	403
	1.67	MAX	-1.37	401	-0.18	401	0.00	403	0.00	403
		MIN	-1.71	403	-0.90	402	0.00	403	0.00	403
	3.33	MAX	-1.09	401	2.08	403	0.00	403	0.00	403
		MIN	-1.37	403	1.23	402	0.00	403	0.00	403
	5.00	MAX	-0.82	401	4.08	403	0.00	403	0.00	403
		MIN	-1.02	403	2.90	402	0.00	403	0.00	403
	6.67	MAX	-0.55	401	5.50	403	0.00	403	0.00	403
		MIN	-0.68	403	4.11	402	0.00	403	0.00	403
	8.33	MAX	-0.27	401	6.35	403	0.00	403	0.00	403
		MIN	-0.34	403	4.87	402	0.00	403	0.00	403
	10.00	MAX	0.00	403	6.64	403	0.00	403	0.00	403
		MIN	-0.04	402	5.17	402	0.00	403	0.00	403
	11.67	MAX	0.34	403	6.35	403	0.00	403	0.00	403
		MIN	0.23	402	5.01	402	0.00	403	0.00	403
	13.33	MAX	0.68	403	5.50	403	0.00	403	0.00	403
		MIN	0.50	402	4.40	402	0.00	403	0.00	403
	15.00	MAX	1.03	403	4.08	403	0.00	403	0.00	403
		MIN	0.78	402	3.34	402	0.00	403	0.00	403

	16.67	MAX	1.37	403	2.08	403	0.00	403	0.00	403
		MIN	1.05	402	1.82	402	0.00	403	0.00	403
	18.33	MAX	1.71	403	-0.16	401	0.00	403	0.00	403
		MIN	1.32	402	-0.48	403	0.00	403	0.00	403
	20.00	MAX	2.05	403	-2.59	402	0.00	403	0.00	403
		MIN	1.60	402	-3.61	403	0.00	403	0.00	403

MAX/MIN FORCE VALUES FOR MEMB 3, AMONGST ALL SECT LOCATIONS

	FY/ FZ	DIST DIST	LD LD	MZ/ MY	DIST DIST	LD LD	FX	DIST	LD
MAX.	2.05	20.00	403	6.64	10.00	403			
	0.00	0.00	401	0.00	0.00	401	0.31 C	0.00	402
MIN.	-2.05	0.00	403	-3.61	20.00	403			
	0.00	20.00	403	0.00	20.00	403	0.11 C	20.00	401

4	0.00	MAX	3.03	402	5.50	401	0.00	403	0.00	403
		MIN	1.91	401	3.49	402	0.00	403	0.00	403
	1.67	MAX	2.29	402	2.31	401	0.00	403	0.00	403
		MIN	1.91	401	-0.94	402	0.00	403	0.00	403
	3.33	MAX	1.91	401	-0.89	401	0.00	403	0.00	403
		MIN	1.56	402	-4.16	402	0.00	403	0.00	403
	5.00	MAX	1.91	401	-4.08	401	0.00	403	0.00	403
		MIN	0.83	402	-6.15	402	0.00	403	0.00	403
	6.67	MAX	1.43	401	-6.17	403	0.00	403	0.00	403
		MIN	0.09	402	-7.00	401	0.00	403	0.00	403
	8.33	MAX	0.70	401	-6.46	402	0.00	403	0.00	403
		MIN	-0.64	402	-8.78	401	0.00	403	0.00	403
	10.00	MAX	0.00	403	-5.07	402	0.00	403	0.00	403
		MIN	-0.87	402	-9.34	401	0.00	403	0.00	403
	11.67	MAX	-0.41	403	-3.62	402	0.00	403	0.00	403
		MIN	-0.87	402	-8.67	401	0.00	403	0.00	403
	13.33	MAX	-0.82	403	-2.17	402	0.00	403	0.00	403
		MIN	-1.50	401	-6.78	401	0.00	403	0.00	403
	15.00	MAX	-0.87	402	-0.72	402	0.00	403	0.00	403
		MIN	-1.86	401	-4.46	403	0.00	403	0.00	403
	16.67	MAX	-0.87	402	0.74	402	0.00	403	0.00	403
		MIN	-1.86	401	-2.08	403	0.00	403	0.00	403
	18.33	MAX	-0.87	402	2.39	401	0.00	403	0.00	403
		MIN	-2.04	403	0.98	403	0.00	403	0.00	403
	20.00	MAX	-0.87	402	5.49	401	0.00	403	0.00	403
		MIN	-2.45	403	3.64	402	0.00	403	0.00	403

MAX/MIN FORCE VALUES FOR MEMB 4, AMONGST ALL SECT LOCATIONS

FY/ FZ	DIST DIST	LD LD	MZ/ MY	DIST DIST	LD LD	FX	DIST	LD

MAX.	3.03	0.00	402	5.50	0.00	401			
	0.00	0.00	401	0.00	0.00	401	0.80 C	0.00	401
MIN.	-2.45	20.00	403	-9.34	10.00	401			
	0.00	20.00	403	0.00	20.00	403	0.60 C	20.00	402

********** END OF FORCE ENVELOPE FROM INTERNAL STORAGE **********

199. LOAD LIST 501 TO 502
200. PRINT FORCE ENVELOPE NSECTION 4 ALL

MEMBER FORCE ENVELOPE

ALL UNITS ARE KIP FEET

MEMB	DISTANCE		FY	LD	MZ	LD	FZ	LD	MY	LD
1	0.00	MAX	0.12	502	7.07	502	0.00	502	0.00	502
		MIN	-0.06	501	6.33	501	0.00	502	0.00	502
	0.83	MAX	0.08	502	6.98	502	0.00	502	0.00	502
		MIN	-0.09	501	6.40	501	0.00	502	0.00	502
	1.67	MAX	0.04	502	6.93	502	0.00	502	0.00	502
		MIN	-0.13	501	6.49	501	0.00	502	0.00	502
	2.50	MAX	-0.01	502	6.92	502	0.00	502	0.00	502
		MIN	-0.18	501	6.62	501	0.00	502	0.00	502
	3.33	MAX	-0.07	502	6.95	502	0.00	502	0.00	502
		MIN	-0.24	501	6.79	501	0.00	502	0.00	502
	4.17	MAX	-0.13	502	7.03	502	0.00	502	0.00	502
		MIN	-0.30	501	7.02	501	0.00	502	0.00	502
	5.00	MAX	-0.20	502	7.30	501	0.00	502	0.00	502
		MIN	-0.37	501	7.17	502	0.00	502	0.00	502
	5.83	MAX	-0.28	502	7.65	501	0.00	502	0.00	502
		MIN	-0.45	501	7.37	502	0.00	502	0.00	502
	6.67	MAX	-0.37	502	8.06	501	0.00	502	0.00	502
		MIN	-0.54	501	7.64	502	0.00	502	0.00	502
	7.50	MAX	-0.46	502	8.55	501	0.00	502	0.00	502
		MIN	-0.64	501	7.99	502	0.00	502	0.00	502
	8.33	MAX	-0.57	502	9.12	501	0.00	502	0.00	502
		MIN	-0.74	501	8.41	502	0.00	502	0.00	502
	9.17	MAX	-0.68	502	9.78	501	0.00	502	0.00	502
		MIN	-0.85	501	8.93	502	0.00	502	0.00	502
	10.00	MAX	-0.79	502	10.54	501	0.00	502	0.00	502
		MIN	-0.97	501	9.54	502	0.00	502	0.00	502

MAX/MIN FORCE VALUES FOR MEMB 1, AMONGST ALL SECT LOCATIONS

	FY/ FZ	DIST DIST	LD LD	MZ/ MY	DIST DIST	LD LD	FX	DIST	LD
MAX.	0.12	0.00	502	10.54	10.00	501			
	0.00	0.00	501	0.00	0.00	501	4.94 C	0.00	502
MIN.	-0.97	10.00	501	6.33	0.00	501			
	0.00	10.00	502	0.00	10.00	502	3.65 C	10.00	501

2	0.00	MAX	0.06	501	-6.02	502	0.00	502	0.00	502
		MIN	-0.12	502	-6.34	501	0.00	502	0.00	502
	0.83	MAX	0.09	501	-5.93	502	0.00	502	0.00	502
		MIN	-0.08	502	-6.40	501	0.00	502	0.00	502

1.67	MAX	0.13	501	-5.88	502	0.00	502	0.00	502
	MIN	-0.04	502	-6.49	501	0.00	502	0.00	502
2.50	MAX	0.18	501	-5.87	502	0.00	502	0.00	502
	MIN	0.01	502	-6.62	501	0.00	502	0.00	502
3.33	MAX	0.24	501	-5.90	502	0.00	502	0.00	502
	MIN	0.07	502	-6.80	501	0.00	502	0.00	502
4.17	MAX	0.30	501	-5.98	502	0.00	502	0.00	502
	MIN	0.13	502	-7.02	501	0.00	502	0.00	502
5.00	MAX	0.37	501	-6.12	502	0.00	502	0.00	502
	MIN	0.20	502	-7.30	501	0.00	502	0.00	502
5.83	MAX	0.45	501	-6.32	502	0.00	502	0.00	502
	MIN	0.28	502	-7.65	501	0.00	502	0.00	502
6.67	MAX	0.54	501	-6.59	502	0.00	502	0.00	502
	MIN	0.37	502	-8.06	501	0.00	502	0.00	502
7.50	MAX	0.64	501	-6.93	502	0.00	502	0.00	502
	MIN	0.46	502	-8.55	501	0.00	502	0.00	502
8.33	MAX	0.74	501	-7.36	502	0.00	502	0.00	502
	MIN	0.57	502	-9.13	501	0.00	502	0.00	502
9.17	MAX	0.85	501	-7.88	502	0.00	502	0.00	502
	MIN	0.68	502	-9.79	501	0.00	502	0.00	502
10.00	MAX	0.97	501	-8.49	502	0.00	502	0.00	502
	MIN	0.79	502	-10.54	501	0.00	502	0.00	502

MAX/MIN FORCE VALUES FOR MEMB 2, AMONGST ALL SECT LOCATIONS

	FY/ FZ	DIST DIST	LD LD	MZ/ MY	DIST DIST	LD LD	FX	DIST	LD
MAX.	0.97	10.00	501	-5.87	2.50	502			
	0.00	0.00	501	0.00	0.00	501	3.66 C	0.00	501
MIN.	-0.12	0.00	502	-10.54	10.00	501			
	0.00	10.00	502	0.00	10.00	502	2.36 C	10.00	502

3	0.00	MAX	-3.08	501	-4.76	501	0.00	502	0.00	502
		MIN	-3.13	502	-5.57	502	0.00	502	0.00	502
	1.67	MAX	-2.57	501	-0.06	501	0.00	502	0.00	502
		MIN	-2.62	502	-0.78	502	0.00	502	0.00	502
	3.33	MAX	-2.05	501	3.79	501	0.00	502	0.00	502
		MIN	-2.10	502	3.15	502	0.00	502	0.00	502
	5.00	MAX	-1.54	501	6.79	501	0.00	502	0.00	502
		MIN	-1.59	502	6.23	502	0.00	502	0.00	502
	6.67	MAX	-1.03	501	8.93	501	0.00	502	0.00	502
		MIN	-1.08	502	8.45	502	0.00	502	0.00	502
	8.33	MAX	-0.51	501	10.21	501	0.00	502	0.00	502
		MIN	-0.56	502	9.82	502	0.00	502	0.00	502
	10.00	MAX	0.00	501	10.64	501	0.00	502	0.00	502
		MIN	-0.05	502	10.33	502	0.00	502	0.00	502
	11.67	MAX	0.51	501	10.21	501	0.00	502	0.00	502
		MIN	0.46	502	9.99	502	0.00	502	0.00	502
	13.33	MAX	1.03	501	8.92	501	0.00	502	0.00	502
		MIN	0.98	502	8.79	502	0.00	502	0.00	502
	15.00	MAX	1.54	501	6.79	501	0.00	502	0.00	502
		MIN	1.49	502	6.73	502	0.00	502	0.00	502

	16.67	MAX	2.05	501	3.82	502	0.00	502	0.00	502
		MIN	2.00	502	3.79	501	0.00	502	0.00	502
	18.33	MAX	2.57	501	0.05	502	0.00	502	0.00	502
		MIN	2.52	502	-0.06	501	0.00	502	0.00	502
	20.00	MAX	3.08	501	-4.57	502	0.00	502	0.00	502
		MIN	3.03	502	-4.77	501	0.00	502	0.00	502

MAX/MIN FORCE VALUES FOR MEMB 3, AMONGST ALL SECT LOCATIONS

	FY/ FZ	DIST DIST	LD LD	MZ/ MY	DIST DIST	LD LD	FX	DIST	LD
MAX.	3.08	20.00	501	10.64	10.00	501			
	0.00	0.00	501	0.00	0.00	501	0.12 C	0.00	502
MIN.	-3.13	0.00	502	-5.57	0.00	502			
	0.00	20.00	502	0.00	20.00	502	0.06 T	20.00	501

4	0.00	MAX	4.94	502	9.27	501	0.00	502	0.00	502
		MIN	3.65	501	7.53	502	0.00	502	0.00	502
	1.67	MAX	4.00	502	3.18	501	0.00	502	0.00	502
		MIN	3.65	501	0.08	502	0.00	502	0.00	502
	3.33	MAX	3.65	501	-2.91	501	0.00	502	0.00	502
		MIN	3.05	502	-5.79	502	0.00	502	0.00	502
	5.00	MAX	2.84	501	-8.42	501	0.00	502	0.00	502
		MIN	2.10	502	-10.09	502	0.00	502	0.00	502
	6.67	MAX	1.90	501	-12.36	501	0.00	502	0.00	502
		MIN	1.16	502	-12.80	502	0.00	502	0.00	502
	8.33	MAX	0.95	501	-13.94	502	0.00	502	0.00	502
		MIN	0.21	502	-14.73	501	0.00	502	0.00	502
	10.00	MAX	0.00	501	-13.50	502	0.00	502	0.00	502
		MIN	-0.74	502	-15.53	501	0.00	502	0.00	502
	11.67	MAX	-0.94	501	-11.49	502	0.00	502	0.00	502
		MIN	-1.68	502	-14.74	501	0.00	502	0.00	502
	13.33	MAX	-1.89	501	-7.96	502	0.00	502	0.00	502
		MIN	-2.36	502	-12.38	501	0.00	502	0.00	502
	15.00	MAX	-2.36	502	-4.03	502	0.00	502	0.00	502
		MIN	-2.84	501	-8.44	501	0.00	502	0.00	502
	16.67	MAX	-2.36	502	-0.09	502	0.00	502	0.00	502
		MIN	-3.66	501	-2.93	501	0.00	502	0.00	502
	18.33	MAX	-2.36	502	3.84	502	0.00	502	0.00	502
		MIN	-3.66	501	3.17	501	0.00	502	0.00	502
	20.00	MAX	-2.36	502	9.27	501	0.00	502	0.00	502
		MIN	-3.66	501	7.77	502	0.00	502	0.00	502

MAX/MIN FORCE VALUES FOR MEMB 4, AMONGST ALL SECT LOCATIONS

	FY/ FZ	DIST DIST	LD LD	MZ/ MY	DIST DIST	LD LD	FX	DIST	LD

MAX.	4.94	0.00	502	9.27	0.00	501			
	0.00	0.00	501	0.00	0.00	501	0.97 C	0.00	501
MIN.	-3.66	18.33	501	-15.53	10.00	501			
	0.00	20.00	502	0.00	20.00	502	0.79 C	20.00	502

********** END OF FORCE ENVELOPE FROM INTERNAL STORAGE **********

201. LOAD LIST 601 TO 603
202. PRINT FORCE ENVELOPE NSECTION 4 ALL

MEMBER FORCE ENVELOPE

ALL UNITS ARE KIP FEET

MEMB	DISTANCE		FY	LD	MZ	LD	FZ	LD	MY	LD
1	0.00	MAX	0.37	603	6.80	603	0.00	603	0.00	603
		MIN	-0.05	601	5.01	601	0.00	603	0.00	603
	0.83	MAX	0.33	603	6.50	603	0.00	603	0.00	603
		MIN	-0.08	601	5.07	601	0.00	603	0.00	603
	1.67	MAX	0.29	603	6.24	603	0.00	603	0.00	603
		MIN	-0.12	601	5.15	601	0.00	603	0.00	603
	2.50	MAX	0.24	603	6.02	603	0.00	603	0.00	603
		MIN	-0.17	601	5.28	601	0.00	603	0.00	603
	3.33	MAX	0.19	603	5.84	603	0.00	603	0.00	603
		MIN	-0.23	601	5.42	602	0.00	603	0.00	603
	4.17	MAX	0.12	603	5.71	603	0.00	603	0.00	603
		MIN	-0.29	601	5.36	602	0.00	603	0.00	603
	5.00	MAX	0.05	603	5.94	601	0.00	603	0.00	603
		MIN	-0.37	601	5.36	602	0.00	603	0.00	603
	5.83	MAX	-0.03	603	6.27	601	0.00	603	0.00	603
		MIN	-0.45	601	5.42	602	0.00	603	0.00	603
	6.67	MAX	-0.12	603	6.68	601	0.00	603	0.00	603
		MIN	-0.53	601	5.55	602	0.00	603	0.00	603
	7.50	MAX	-0.21	603	7.16	601	0.00	603	0.00	603
		MIN	-0.63	601	5.76	602	0.00	603	0.00	603
	8.33	MAX	-0.31	603	7.73	601	0.00	603	0.00	603
		MIN	-0.73	601	6.04	603	0.00	603	0.00	603
	9.17	MAX	-0.42	603	8.38	601	0.00	603	0.00	603
		MIN	-0.84	601	6.35	603	0.00	603	0.00	603
	10.00	MAX	-0.54	603	9.13	601	0.00	603	0.00	603
		MIN	-0.96	601	6.75	603	0.00	603	0.00	603

MAX/MIN FORCE VALUES FOR MEMB 1, AMONGST ALL SECT LOCATIONS

	FY/ FZ	DIST DIST	LD LD	MZ/ MY	DIST DIST	LD LD	FX	DIST	LD
MAX.	0.37	0.00	603	9.13	10.00	601			
	0.00	0.00	601	0.00	0.00	601	4.53 C	0.00	602
MIN.	-0.96	10.00	601	5.01	0.00	601			
	0.00	10.00	603	0.00	10.00	603	2.92 C	10.00	601

2	0.00	MAX	0.05	601	-4.71	602	0.00	603	0.00	603
		MIN	-0.37	603	-6.80	603	0.00	603	0.00	603
	0.83	MAX	0.08	601	-4.49	602	0.00	603	0.00	603
		MIN	-0.33	603	-6.50	603	0.00	603	0.00	603

1.67	MAX	0.12	601	-4.29	602	0.00	603	0.00	603
	MIN	-0.29	603	-6.24	603	0.00	603	0.00	603
2.50	MAX	0.17	601	-4.14	602	0.00	603	0.00	603
	MIN	-0.24	603	-6.02	603	0.00	603	0.00	603
3.33	MAX	0.23	601	-4.03	602	0.00	603	0.00	603
	MIN	-0.19	603	-5.84	603	0.00	603	0.00	603
4.17	MAX	0.29	601	-3.97	602	0.00	603	0.00	603
	MIN	-0.12	603	-5.71	603	0.00	603	0.00	603
5.00	MAX	0.37	601	-3.97	602	0.00	603	0.00	603
	MIN	-0.05	603	-5.94	601	0.00	603	0.00	603
5.83	MAX	0.45	601	-4.03	602	0.00	603	0.00	603
	MIN	0.03	603	-6.27	601	0.00	603	0.00	603
6.67	MAX	0.53	601	-4.16	602	0.00	603	0.00	603
	MIN	0.12	603	-6.68	601	0.00	603	0.00	603
7.50	MAX	0.63	601	-4.36	602	0.00	603	0.00	603
	MIN	0.21	603	-7.16	601	0.00	603	0.00	603
8.33	MAX	0.73	601	-4.65	602	0.00	603	0.00	603
	MIN	0.31	603	-7.73	601	0.00	603	0.00	603
9.17	MAX	0.84	601	-5.03	602	0.00	603	0.00	603
	MIN	0.42	603	-8.38	601	0.00	603	0.00	603
10.00	MAX	0.96	601	-5.50	602	0.00	603	0.00	603
	MIN	0.54	603	-9.13	601	0.00	603	0.00	603

MAX/MIN FORCE VALUES FOR MEMB 2, AMONGST ALL SECT LOCATIONS

	FY/ FZ	DIST DIST	LD LD	MZ/ MY	DIST DIST	LD LD	FX	DIST	LD
MAX.	0.96	10.00	601	-3.97	5.00	602			
	0.00	0.00	601	0.00	0.00	601	3.06 C	0.00	603
MIN.	-0.37	0.00	603	-9.13	10.00	601			
	0.00	10.00	603	0.00	10.00	603	1.30 C	10.00	602

3	0.00	MAX	-2.46	601	-3.75	601	0.00	603	0.00	603
		MIN	-3.06	603	-5.48	603	0.00	603	0.00	603
	1.67	MAX	-2.05	601	0.00	601	0.00	603	0.00	603
		MIN	-2.55	603	-1.14	602	0.00	603	0.00	603
	3.33	MAX	-1.64	601	3.08	601	0.00	603	0.00	603
		MIN	-2.04	603	2.05	602	0.00	603	0.00	603
	5.00	MAX	-1.23	601	5.99	603	0.00	603	0.00	603
		MIN	-1.53	603	4.55	602	0.00	603	0.00	603
	6.67	MAX	-0.82	601	8.12	603	0.00	603	0.00	603
		MIN	-1.02	603	6.37	602	0.00	603	0.00	603
	8.33	MAX	-0.41	601	9.39	603	0.00	603	0.00	603
		MIN	-0.51	603	7.51	602	0.00	603	0.00	603
	10.00	MAX	0.00	603	9.82	603	0.00	603	0.00	603
		MIN	-0.07	602	7.96	602	0.00	603	0.00	603
	11.67	MAX	0.51	603	9.39	603	0.00	603	0.00	603
		MIN	0.34	602	7.73	602	0.00	603	0.00	603
	13.33	MAX	1.02	603	8.12	603	0.00	603	0.00	603
		MIN	0.75	602	6.81	602	0.00	603	0.00	603
	15.00	MAX	1.53	603	5.99	603	0.00	603	0.00	603
		MIN	1.16	602	5.22	602	0.00	603	0.00	603

	16.67	MAX	2.04	603	3.08	601	0.00	603	0.00	603
		MIN	1.57	602	2.94	602	0.00	603	0.00	603
	18.33	MAX	2.55	603	0.00	601	0.00	603	0.00	603
		MIN	1.98	602	-0.81	603	0.00	603	0.00	603
	20.00	MAX	3.06	603	-3.68	602	0.00	603	0.00	603
		MIN	2.39	602	-5.48	603	0.00	603	0.00	603

MAX/MIN FORCE VALUES FOR MEMB 3, AMONGST ALL SECT LOCATIONS

	FY/ FZ	DIST DIST	LD LD	MZ/ MY	DIST DIST	LD LD	FX	DIST	LD
MAX.	3.06	20.00	603	9.82	10.00	603			
	0.00	0.00	601	0.00	0.00	601	0.37 C	0.00	603
MIN.	-3.06	0.00	603	-5.48	20.00	603			
	0.00	20.00	603	0.00	20.00	603	0.05 T	20.00	601

4	0.00	MAX	4.53	602	8.23	601	0.00	603	0.00	603
		MIN	2.92	601	4.99	602	0.00	603	0.00	603
	1.67	MAX	3.44	602	3.37	601	0.00	603	0.00	603
		MIN	2.55	603	-1.65	602	0.00	603	0.00	603
	3.33	MAX	2.92	601	-1.50	601	0.00	603	0.00	603
		MIN	2.04	603	-6.46	602	0.00	603	0.00	603
	5.00	MAX	2.92	601	-5.94	603	0.00	603	0.00	603
		MIN	1.24	602	-9.44	602	0.00	603	0.00	603
	6.67	MAX	2.20	601	-8.07	603	0.00	603	0.00	603
		MIN	0.14	602	-10.83	601	0.00	603	0.00	603
	8.33	MAX	1.10	601	-9.34	603	0.00	603	0.00	603
		MIN	-0.96	602	-13.58	601	0.00	603	0.00	603
	10.00	MAX	0.00	603	-7.83	602	0.00	603	0.00	603
		MIN	-1.30	602	-14.49	601	0.00	603	0.00	603
	11.67	MAX	-0.51	603	-5.66	602	0.00	603	0.00	603
		MIN	-1.30	602	-13.58	601	0.00	603	0.00	603
	13.33	MAX	-1.02	603	-3.48	602	0.00	603	0.00	603
		MIN	-2.20	601	-10.83	601	0.00	603	0.00	603
	15.00	MAX	-1.30	602	-1.31	602	0.00	603	0.00	603
		MIN	-2.92	601	-6.36	601	0.00	603	0.00	603
	16.67	MAX	-1.30	602	0.86	602	0.00	603	0.00	603
		MIN	-2.92	601	-2.97	603	0.00	603	0.00	603
	18.33	MAX	-1.30	602	3.37	601	0.00	603	0.00	603
		MIN	-2.92	601	0.86	603	0.00	603	0.00	603
	20.00	MAX	-1.30	602	8.23	601	0.00	603	0.00	603
		MIN	-3.06	603	5.21	602	0.00	603	0.00	603

MAX/MIN FORCE VALUES FOR MEMB 4, AMONGST ALL SECT LOCATIONS

FY/ FZ	DIST DIST	LD LD	MZ/ MY	DIST DIST	LD LD	FX	DIST	LD

```
| MAX.       4.53   0.00  602       8.23   0.00  601
|            0.00   0.00  601       0.00   0.00  601      0.96 C   0.00  601
| MIN.      -3.06  20.00  603     -14.49  10.00  601
|            0.00  20.00  603       0.00  20.00  603      0.54 C  20.00  603
|-----------------------------------------------------------------------------
```

********** END OF FORCE ENVELOPE FROM INTERNAL STORAGE **********

203. LOAD LIST 701 702
204. PRINT FORCE ENVELOPE NSECTION 4 ALL

MEMBER FORCE ENVELOPE

ALL UNITS ARE KIP FEET

MEMB	DISTANCE		FY	LD	MZ	LD	FZ	LD	MY	LD
1	0.00	MAX	0.13	702	6.74	702	0.00	702	0.00	702
		MIN	-0.03	701	6.04	701	0.00	702	0.00	702
	0.83	MAX	0.10	702	6.64	702	0.00	702	0.00	702
		MIN	-0.07	701	6.08	701	0.00	702	0.00	702
	1.67	MAX	0.06	702	6.58	702	0.00	702	0.00	702
		MIN	-0.11	701	6.16	701	0.00	702	0.00	702
	2.50	MAX	0.01	702	6.55	702	0.00	702	0.00	702
		MIN	-0.16	701	6.26	701	0.00	702	0.00	702
	3.33	MAX	-0.05	702	6.57	702	0.00	702	0.00	702
		MIN	-0.21	701	6.42	701	0.00	702	0.00	702
	4.17	MAX	-0.11	702	6.64	702	0.00	702	0.00	702
		MIN	-0.28	701	6.62	701	0.00	702	0.00	702
	5.00	MAX	-0.19	702	6.88	701	0.00	702	0.00	702
		MIN	-0.35	701	6.76	702	0.00	702	0.00	702
	5.83	MAX	-0.27	702	7.21	701	0.00	702	0.00	702
		MIN	-0.43	701	6.95	702	0.00	702	0.00	702
	6.67	MAX	-0.35	702	7.60	701	0.00	702	0.00	702
		MIN	-0.52	701	7.21	702	0.00	702	0.00	702
	7.50	MAX	-0.45	702	8.07	701	0.00	702	0.00	702
		MIN	-0.61	701	7.54	702	0.00	702	0.00	702
	8.33	MAX	-0.55	702	8.62	701	0.00	702	0.00	702
		MIN	-0.71	701	7.96	702	0.00	702	0.00	702
	9.17	MAX	-0.66	702	9.26	701	0.00	702	0.00	702
		MIN	-0.82	701	8.46	702	0.00	702	0.00	702
	10.00	MAX	-0.78	702	10.00	701	0.00	702	0.00	702
		MIN	-0.94	701	9.06	702	0.00	702	0.00	702

MAX/MIN FORCE VALUES FOR MEMB 1, AMONGST ALL SECT LOCATIONS

	FY/ FZ	DIST DIST	LD LD	MZ/ MY	DIST DIST	LD LD	FX	DIST	LD
MAX.	0.13	0.00	702	10.00	10.00	701			
	0.00	0.00	701	0.00	0.00	701	4.69 C	0.00	702
MIN.	-0.94	10.00	701	6.04	0.00	701			
	0.00	10.00	702	0.00	10.00	702	3.47 C	10.00	701

2	0.00	MAX	0.03	701	-5.74	702	0.00	702	0.00	702
		MIN	-0.13	702	-6.04	701	0.00	702	0.00	702
	0.83	MAX	0.07	701	-5.64	702	0.00	702	0.00	702
		MIN	-0.10	702	-6.08	701	0.00	702	0.00	702

1.67	MAX	0.11	701	-5.58	702	0.00	702	0.00	702
	MIN	-0.06	702	-6.16	701	0.00	702	0.00	702
2.50	MAX	0.16	701	-5.55	702	0.00	702	0.00	702
	MIN	-0.01	702	-6.26	701	0.00	702	0.00	702
3.33	MAX	0.21	701	-5.57	702	0.00	702	0.00	702
	MIN	0.05	702	-6.42	701	0.00	702	0.00	702
4.17	MAX	0.28	701	-5.64	702	0.00	702	0.00	702
	MIN	0.11	702	-6.62	701	0.00	702	0.00	702
5.00	MAX	0.35	701	-5.76	702	0.00	702	0.00	702
	MIN	0.19	702	-6.88	701	0.00	702	0.00	702
5.83	MAX	0.43	701	-5.95	702	0.00	702	0.00	702
	MIN	0.27	702	-7.21	701	0.00	702	0.00	702
6.67	MAX	0.52	701	-6.21	702	0.00	702	0.00	702
	MIN	0.35	702	-7.60	701	0.00	702	0.00	702
7.50	MAX	0.61	701	-6.54	702	0.00	702	0.00	702
	MIN	0.45	702	-8.07	701	0.00	702	0.00	702
8.33	MAX	0.71	701	-6.96	702	0.00	702	0.00	702
	MIN	0.55	702	-8.62	701	0.00	702	0.00	702
9.17	MAX	0.82	701	-7.46	702	0.00	702	0.00	702
	MIN	0.66	702	-9.26	701	0.00	702	0.00	702
10.00	MAX	0.94	701	-8.06	702	0.00	702	0.00	702
	MIN	0.78	702	-10.00	701	0.00	702	0.00	702

MAX/MIN FORCE VALUES FOR MEMB 2, AMONGST ALL SECT LOCATIONS

	FY/ FZ	DIST DIST	LD LD	MZ/ MY	DIST DIST	LD LD	FX	DIST	LD
MAX.	0.94	10.00	701	-5.55	2.50	702			
	0.00	0.00	701	0.00	0.00	701	3.47 C	0.00	701
MIN.	-0.13	0.00	702	-10.00	10.00	701			
	0.00	10.00	702	0.00	10.00	702	2.24 C	10.00	702

3	0.00	MAX	-2.93	701	-4.56	701	0.00	702	0.00	702
		MIN	-2.98	702	-5.32	702	0.00	702	0.00	702
	1.67	MAX	-2.44	701	-0.08	701	0.00	702	0.00	702
		MIN	-2.49	702	-0.77	702	0.00	702	0.00	702
	3.33	MAX	-1.95	701	3.58	701	0.00	702	0.00	702
		MIN	-2.00	702	2.98	702	0.00	702	0.00	702
	5.00	MAX	-1.47	701	6.43	701	0.00	702	0.00	702
		MIN	-1.51	702	5.90	702	0.00	702	0.00	702
	6.67	MAX	-0.98	701	8.46	701	0.00	702	0.00	702
		MIN	-1.02	702	8.02	702	0.00	702	0.00	702
	8.33	MAX	-0.49	701	9.68	701	0.00	702	0.00	702
		MIN	-0.54	702	9.32	702	0.00	702	0.00	702
	10.00	MAX	0.00	701	10.09	701	0.00	702	0.00	702
		MIN	-0.05	702	9.80	702	0.00	702	0.00	702
	11.67	MAX	0.49	701	9.68	701	0.00	702	0.00	702
		MIN	0.44	702	9.48	702	0.00	702	0.00	702
	13.33	MAX	0.98	701	8.46	701	0.00	702	0.00	702
		MIN	0.93	702	8.33	702	0.00	702	0.00	702
	15.00	MAX	1.47	701	6.43	701	0.00	702	0.00	702
		MIN	1.42	702	6.38	702	0.00	702	0.00	702

16.67	MAX	1.95	701	3.61	702	0.00	702	0.00	702
	MIN	1.91	702	3.58	701	0.00	702	0.00	702
18.33	MAX	2.44	701	0.03	702	0.00	702	0.00	702
	MIN	2.39	702	-0.08	701	0.00	702	0.00	702
20.00	MAX	2.93	701	-4.37	702	0.00	702	0.00	702
	MIN	2.88	702	-4.56	701	0.00	702	0.00	702

MAX/MIN FORCE VALUES FOR MEMB 3, AMONGST ALL SECT LOCATIONS

	FY/ FZ	DIST DIST	LD LD	MZ/ MY	DIST DIST	LD LD	FX	DIST	LD
MAX.	2.93	20.00	701	10.09	10.00	701			
	0.00	0.00	701	0.00	0.00	701	0.13 C	0.00	702
MIN.	-2.98	0.00	702	-5.32	0.00	702			
	0.00	20.00	702	0.00	20.00	702	0.03 T	20.00	701

4	0.00	MAX	4.69	702	8.81	701	0.00	702	0.00	702
		MIN	3.47	701	7.17	702	0.00	702	0.00	702
	1.67	MAX	3.79	702	3.03	701	0.00	702	0.00	702
		MIN	3.47	701	0.10	702	0.00	702	0.00	702
	3.33	MAX	3.47	701	-2.74	701	0.00	702	0.00	702
		MIN	2.89	702	-5.47	702	0.00	702	0.00	702
	5.00	MAX	2.69	701	-7.97	701	0.00	702	0.00	702
		MIN	2.00	702	-9.55	702	0.00	702	0.00	702
	6.67	MAX	1.80	701	-11.71	701	0.00	702	0.00	702
		MIN	1.10	702	-12.13	702	0.00	702	0.00	702
	8.33	MAX	0.90	701	-13.21	702	0.00	702	0.00	702
		MIN	0.20	702	-13.95	701	0.00	702	0.00	702
	10.00	MAX	0.00	701	-12.79	702	0.00	702	0.00	702
		MIN	-0.70	702	-14.70	701	0.00	702	0.00	702
	11.67	MAX	-0.90	701	-10.88	702	0.00	702	0.00	702
		MIN	-1.60	702	-13.95	701	0.00	702	0.00	702
	13.33	MAX	-1.80	701	-7.53	702	0.00	702	0.00	702
		MIN	-2.24	702	-11.71	701	0.00	702	0.00	702
	15.00	MAX	-2.24	702	-3.80	702	0.00	702	0.00	702
		MIN	-2.69	701	-7.97	701	0.00	702	0.00	702
	16.67	MAX	-2.24	702	-0.07	702	0.00	702	0.00	702
		MIN	-3.47	701	-2.74	701	0.00	702	0.00	702
	18.33	MAX	-2.24	702	3.66	702	0.00	702	0.00	702
		MIN	-3.47	701	3.03	701	0.00	702	0.00	702
	20.00	MAX	-2.24	702	8.81	701	0.00	702	0.00	702
		MIN	-3.47	701	7.40	702	0.00	702	0.00	702

MAX/MIN FORCE VALUES FOR MEMB 4, AMONGST ALL SECT LOCATIONS

FY/ FZ	DIST DIST	LD LD	MZ/ MY	DIST DIST	LD LD	FX	DIST	LD

MAX.	4.69	0.00	702	8.81	20.00	701			
	0.00	0.00	701	0.00	0.00	701	0.94 C	0.00	701
MIN.	-3.47	18.33	701	-14.70	10.00	701			
	0.00	20.00	702	0.00	20.00	702	0.78 C	20.00	702

********** END OF FORCE ENVELOPE FROM INTERNAL STORAGE **********

205. LOAD LIST 801 TO 803
206. PRINT FORCE ENVELOPE NSECTION 4 ALL

MEMBER FORCE ENVELOPE

ALL UNITS ARE KIP FEET

MEMB	DISTANCE		FY	LD	MZ	LD	FZ	LD	MY	LD
1	0.00	MAX	0.32	802	3.68	802	0.00	803	0.00	803
		MIN	0.12	801	3.04	801	0.00	803	0.00	803
	0.83	MAX	0.28	802	3.43	802	0.00	803	0.00	803
		MIN	0.09	801	2.95	801	0.00	803	0.00	803
	1.67	MAX	0.24	802	3.21	802	0.00	803	0.00	803
		MIN	0.05	801	2.87	803	0.00	803	0.00	803
	2.50	MAX	0.19	802	3.03	802	0.00	803	0.00	803
		MIN	0.00	801	2.81	803	0.00	803	0.00	803
	3.33	MAX	0.14	802	2.90	801	0.00	803	0.00	803
		MIN	-0.06	801	2.79	803	0.00	803	0.00	803
	4.17	MAX	0.07	802	2.98	801	0.00	803	0.00	803
		MIN	-0.12	801	2.80	802	0.00	803	0.00	803
	5.00	MAX	0.00	802	3.11	801	0.00	803	0.00	803
		MIN	-0.20	801	2.77	802	0.00	803	0.00	803
	5.83	MAX	-0.08	802	3.31	801	0.00	803	0.00	803
		MIN	-0.28	801	2.80	802	0.00	803	0.00	803
	6.67	MAX	-0.17	802	3.57	801	0.00	803	0.00	803
		MIN	-0.36	801	2.91	802	0.00	803	0.00	803
	7.50	MAX	-0.26	802	3.91	801	0.00	803	0.00	803
		MIN	-0.46	801	3.08	802	0.00	803	0.00	803
	8.33	MAX	-0.36	802	4.34	801	0.00	803	0.00	803
		MIN	-0.56	801	3.34	802	0.00	803	0.00	803
	9.17	MAX	-0.47	802	4.85	801	0.00	803	0.00	803
		MIN	-0.67	801	3.69	802	0.00	803	0.00	803
	10.00	MAX	-0.59	802	5.46	801	0.00	803	0.00	803
		MIN	-0.79	801	4.13	802	0.00	803	0.00	803

MAX/MIN FORCE VALUES FOR MEMB 1, AMONGST ALL SECT LOCATIONS

	FY/ FZ	DIST DIST	LD LD	MZ/ MY	DIST DIST	LD LD	FX	DIST	LD
MAX.	0.32	0.00	802	5.46	10.00	801			
	0.00	0.00	801	0.00	0.00	801	2.68 C	0.00	802
MIN.	-0.79	10.00	801	2.77	5.00	802			
	0.00	10.00	803	0.00	10.00	803	1.72 C	10.00	801

2	0.00	MAX	-0.12	801	-2.86	802	0.00	803	0.00	803
		MIN	-0.32	802	-3.10	803	0.00	803	0.00	803
	0.83	MAX	-0.09	801	-2.61	802	0.00	803	0.00	803
		MIN	-0.28	802	-2.97	803	0.00	803	0.00	803

1.67	MAX	-0.05	801	-2.39	802	0.00	803	0.00	803
	MIN	-0.24	802	-2.89	801	0.00	803	0.00	803
2.50	MAX	0.00	801	-2.21	802	0.00	803	0.00	803
	MIN	-0.19	802	-2.88	801	0.00	803	0.00	803
3.33	MAX	0.06	801	-2.07	802	0.00	803	0.00	803
	MIN	-0.14	802	-2.90	801	0.00	803	0.00	803
4.17	MAX	0.12	801	-1.98	802	0.00	803	0.00	803
	MIN	-0.07	802	-2.98	801	0.00	803	0.00	803
5.00	MAX	0.20	801	-1.95	802	0.00	803	0.00	803
	MIN	0.00	802	-3.11	801	0.00	803	0.00	803
5.83	MAX	0.28	801	-1.98	802	0.00	803	0.00	803
	MIN	0.08	802	-3.31	801	0.00	803	0.00	803
6.67	MAX	0.36	801	-2.08	802	0.00	803	0.00	803
	MIN	0.17	802	-3.57	801	0.00	803	0.00	803
7.50	MAX	0.46	801	-2.26	802	0.00	803	0.00	803
	MIN	0.26	802	-3.91	801	0.00	803	0.00	803
8.33	MAX	0.56	801	-2.52	802	0.00	803	0.00	803
	MIN	0.36	802	-4.34	801	0.00	803	0.00	803
9.17	MAX	0.67	801	-2.87	802	0.00	803	0.00	803
	MIN	0.47	802	-4.85	801	0.00	803	0.00	803
10.00	MAX	0.79	801	-3.31	802	0.00	803	0.00	803
	MIN	0.59	802	-5.46	801	0.00	803	0.00	803

MAX/MIN FORCE VALUES FOR MEMB 2, AMONGST ALL SECT LOCATIONS

	FY/ FZ	DIST DIST	LD LD	MZ/ MY	DIST DIST	LD LD	FX	DIST	LD
MAX.	0.79	10.00	801	-1.95	5.00	802			
	0.00	0.00	801	0.00	0.00	801	2.14 C	0.00	803
MIN.	-0.32	0.00	802	-5.46	10.00	801			
	0.00	10.00	803	0.00	10.00	803	0.77 C	10.00	802

3	0.00	MAX	-1.45	803	-2.38	801	0.00	803	0.00	803
		MIN	-1.49	802	-3.12	802	0.00	803	0.00	803
	1.67	MAX	-1.21	803	-0.17	801	0.00	803	0.00	803
		MIN	-1.25	802	-0.84	802	0.00	803	0.00	803
	3.33	MAX	-0.97	803	1.64	801	0.00	803	0.00	803
		MIN	-1.01	802	1.04	802	0.00	803	0.00	803
	5.00	MAX	-0.72	803	3.05	801	0.00	803	0.00	803
		MIN	-0.76	802	2.51	802	0.00	803	0.00	803
	6.67	MAX	-0.48	803	4.06	801	0.00	803	0.00	803
		MIN	-0.52	802	3.58	802	0.00	803	0.00	803
	8.33	MAX	-0.24	803	4.66	801	0.00	803	0.00	803
		MIN	-0.28	802	4.25	802	0.00	803	0.00	803
	10.00	MAX	0.00	803	4.87	801	0.00	803	0.00	803
		MIN	-0.04	802	4.52	802	0.00	803	0.00	803
	11.67	MAX	0.24	803	4.66	801	0.00	803	0.00	803
		MIN	0.20	802	4.38	802	0.00	803	0.00	803
	13.33	MAX	0.48	803	4.06	801	0.00	803	0.00	803
		MIN	0.44	802	3.84	802	0.00	803	0.00	803
	15.00	MAX	0.73	803	3.05	801	0.00	803	0.00	803
		MIN	0.69	802	2.90	802	0.00	803	0.00	803

16.67	MAX	0.97	803	1.64	801	0.00	803	0.00	803
	MIN	0.93	802	1.55	803	0.00	803	0.00	803
18.33	MAX	1.21	803	-0.17	801	0.00	803	0.00	803
	MIN	1.17	802	-0.26	803	0.00	803	0.00	803
20.00	MAX	1.45	803	-2.34	802	0.00	803	0.00	803
	MIN	1.41	802	-2.48	803	0.00	803	0.00	803

MAX/MIN FORCE VALUES FOR MEMB 3, AMONGST ALL SECT LOCATIONS

	FY/ FZ	DIST DIST	LD LD	MZ/ MY	DIST DIST	LD LD	FX	DIST	LD
MAX.	1.45	20.00	801	4.87	10.00	801			
	0.00	0.00	801	0.00	0.00	801	0.32 C	0.00	802
MIN.	-1.49	0.00	802	-3.12	0.00	802			
	0.00	20.00	803	0.00	20.00	803	0.12 C	20.00	801

4	0.00	MAX	2.68	802	5.05	801	0.00	803	0.00	803
		MIN	1.72	801	3.14	802	0.00	803	0.00	803
	1.67	MAX	2.03	802	2.18	801	0.00	803	0.00	803
		MIN	1.72	801	-0.78	802	0.00	803	0.00	803
	3.33	MAX	1.72	801	-0.69	801	0.00	803	0.00	803
		MIN	1.38	802	-3.62	802	0.00	803	0.00	803
	5.00	MAX	1.72	801	-3.56	801	0.00	803	0.00	803
		MIN	0.73	802	-5.38	802	0.00	803	0.00	803
	6.67	MAX	1.30	801	-5.16	803	0.00	803	0.00	803
		MIN	0.08	802	-6.20	801	0.00	803	0.00	803
	8.33	MAX	0.65	801	-5.65	802	0.00	803	0.00	803
		MIN	-0.57	802	-7.82	801	0.00	803	0.00	803
	10.00	MAX	0.00	803	-4.43	802	0.00	803	0.00	803
		MIN	-0.77	802	-8.36	801	0.00	803	0.00	803
	11.67	MAX	-0.36	803	-3.14	802	0.00	803	0.00	803
		MIN	-0.77	802	-7.82	801	0.00	803	0.00	803
	13.33	MAX	-0.71	803	-1.86	802	0.00	803	0.00	803
		MIN	-1.30	801	-6.20	801	0.00	803	0.00	803
	15.00	MAX	-0.77	802	-0.58	802	0.00	803	0.00	803
		MIN	-1.72	801	-3.67	803	0.00	803	0.00	803
	16.67	MAX	-0.77	802	0.70	802	0.00	803	0.00	803
		MIN	-1.72	801	-1.59	803	0.00	803	0.00	803
	18.33	MAX	-0.77	802	2.18	801	0.00	803	0.00	803
		MIN	-1.78	803	1.08	803	0.00	803	0.00	803
	20.00	MAX	-0.77	802	5.05	801	0.00	803	0.00	803
		MIN	-2.14	803	3.27	802	0.00	803	0.00	803

MAX/MIN FORCE VALUES FOR MEMB 4, AMONGST ALL SECT LOCATIONS

FY/ FZ	DIST DIST	LD LD	MZ/ MY	DIST DIST	LD LD	FX	DIST	LD

MAX.	2.68	0.00	802	5.05	0.00	801			
	0.00	0.00	801	0.00	0.00	801	0.79 C	0.00	801
MIN.	-2.14	20.00	803	-8.36	10.00	801			
	0.00	20.00	803	0.00	20.00	803	0.59 C	20.00	802

********** END OF FORCE ENVELOPE FROM INTERNAL STORAGE **********

207. FINISH

********** END OF THE STAAD.Pro RUN **********

**** DATE= JAN 23,2015 TIME= 11:31: 7 ****

```
**************************************************************
*   For technical assistance on STAAD.Pro, please visit      *
*   http://selectservices.bentley.com/en-US/                 *
*                                                            *
*   Details about additional assistance from                 *
*   Bentley and Partners can be found at program menu        *
*   Help->Technical Support                                  *
*                                                            *
*      Copyright (c) 1997-2014 Bentley Systems, Inc.
*                http://www.bentley.com                      *
**************************************************************
```