DESIGN CALCULATIONS FOR PRECAST CONCRETE BOX CULVERT
(REV 1)

PROPOSED IMPROVEMENT
BRIDGE #6, VT ROUTE 58
IRASBURG, VT

STATE OF VERMONT
CHRISTOPHER M. VOGT
NO. 77088
Structural
LICENSED
PROFESSIONAL ENGINEER
4/6/15

J. A. MCDONALD INC.

CONCRETE SYSTEMS, INC.
9 COMMERCIAL STREET
HUDSON, NH

CSI Drawing #: C22283 - LO1

TABLE OF CONTENTS

Section #	Description	Total Pages
1	Summary of Design Information	1
2	Boxcar Output: 20' x 8' B C, 12ft Earth Cover, HL93	16
3	CSI LRFD Wing wall 1&2 Calculations	16
4	CSI LRFD Wing wall 3 Calculations	16
5	CSI LRFD Wing wall 4 Calculations	16
6	Detached Headwall 1 Calculations	4
7	Detached Headwall 2 Calculations	4
8	Bridge Load Rating Statement	1
	TOTAL PAGES IN SET	74

9 Commercial Street Hudson, New Hampshire 03051 Phone (603) 889-4163
Fax Number: Precast Sales (603) 889-0039
Fax Number: Manhole Design and Engineering (603) 598-1344

Section 1

Summary of Design Information

REFERENCES:

AASHTO LRFD Bridge Design Specifications
ASTM C1577 Standard Specifications for Precast Reinforced Concrete Box Sections for Culverts, Storm Drains and Sewers
ACI 318 Building Code Requirements for Structural Concrete
NPCA Quality Control Manual for Precast Plants
Plans & Specifications: Proposed Improvement: Bridge #6, VT Route 58 Irasburg, VT: Sheet 1 of 55 to Sheet 55 of 55

COMPUTER PROGRAMS:

BOXCAR
MATHCAD
CSI LRFD Wing wall Spreadsheet

DESIGN PARAMETERS:

Concrete:
Design strength f'c = 5000 psi
Unit weight = 150 pcf
Reinforcing:
Yield strength fy = 60,000 psi
Cover to reinforcing = 1.5" Everywhere, u n o

Soil: *Unit weight = 140 pcf*
Lateral earth pressure coefficient (max.) = .50
Lateral earth pressure coefficient (min.) = .25

Earth Cover: *12' max*

Live Load: *HL93*

Section 2
Boxcar Output: 20’ x 8’ B C
12ft Earth Cover, HL93

BOXCAR

Version 3.1 for Windows
15 September 2010

A Computer Program for the Structural
Design of Reinforced Concrete Box
Culverts

Developed by

Simpson Gumpertz & Heger Inc.
in cooperation with

The Federal Highway Administration
and
The American Concrete Pipe Association

The successful application and use of this software product is dependent on the application of skilled engineering judgment and is the responsibility of the user. The user must select input values suitable to his specific installation. The information presented in the computer output is for review, interpretation, application and approval by a qualified engineer.

****

ANY IMPLIED OR EXPRESS WARRANTIES COVERING THE SOFTWARE PROGRAM OR PROGRAM USER MANUAL INCLUDING ANY WARRANTIES OF MERCHANTABILITY OR FITNESS FOR A PARTICULAR PURPOSE ARE EXPRESSLY EXCLUDED. SIMPSON GUMPERTZ & HEGER INC., THE AMERICAN CONCRETE PIPE ASSOCIATION, AND THE FEDERAL HIGHWAY ADMINISTRATION SHALL NOT BE LIABLE FOR SPECIAL, INCIDENTAL, CONSEQUENTIAL INDIRECT OR OTHER SIMILAR DAMAGES ARISING FROM BREACH OF WARRANTY, BREACH OF CONTRACT OR OTHER LEGAL THEORY EVEN IF SUCH PARTIES HAVE BEEN ADVISED OF SUCH DAMAGES.

****

Date: 03-10-2015
Time: 12:00:24
Filename - C22283-1

Filename - C22283-1
Job Description - IrasburgVT 20x8 HL93 Cov 12'max

GEOMETRY

Span	20. ft	Top Slab Thickness	14. in.
Rise	8. ft	Bottom Slab Thickness	14. in.
Min. Depth of Fill	12. ft	Sidewall Thickness	12. in.
Max. Depth of Fill	12. ft	Length of Precast Section	7.5 ft
Depth Increment	0. ft		

HAUNCH DIMENSIONS		CONCRETE COVERS	
Top Vertical	8. in.	Top Outside	1.50 in.
Top Horizontal	8. in.	Bottom Outside	1.50 in.
Bottom Vertical	8. in.	Sidewall Outside	1.50 in.
Bottom Horizontal	8. in.	Top Inside	1.50 in.
		Bottom Inside	1.50 in.
		Sidewall Inside	1.50 in.

MATERIAL PROPERTIES

Main Reinforcing Yield Stress	60000.	psi
Total Service Stress Limit, % of Yield Stress	100	%
Design Concrete Strength	5000.	psi
Concrete Density	150.	pcf

DESIGN SPECIFICATION AASHTO LRFD

REINFORCING DATA

	DIAMETER	SPACING
Top Slab Outside Face(AS7)	0.625 in.	9 in.
Bottom Slab Outside Face(AS8)	0.625 in.	9 in.
Sidewall Outside Face(AS1)	0.875 in.	4.5 in.
Top Slab Inside Face(AS2)	0.875 in.	4 in.
Bottom Slab Inside Face(AS3)	0.875 in.	4 in.
Sidewall Inside Face(AS4)	0.5 in.	8 in.

The diameters are used to estimate depth to tension reinforcing from compression face. They do not represent required reinforcing diameters.

SOIL LOAD DATA

Soil Density	140 pcf
Minimum Lateral Pressure Coefficient	0.25
Maximum Lateral Pressure Coefficient	0.50
Installation Type	Embankment/Compacted
Soil-Structure Interaction Factor	1.109

LIVE LOAD DATA AASHTO - LRFD
HL-93 Loading

Live Load: 1

Live Load Type	HS-Series
Live Load Magnitude	20 tons
Footprint specification	by Code
Tire Footprint Length	10 in.
Tire Footprint Width	20 in.

Live Load Distribution Factor	1.15
Direction of Travel	Parallel to Span
Impact Factor	Design Code
Lane Load	64 lb/ft

Live Load: 2

Live Load Type	Interstate - Tandem
Live Load Magnitude	25 kips
Footprint specification	by Code
Tire Footprint Length	10 in.
Tire Footprint Width	20 in.
Live Load Distribution Factor	1.15
Direction of Travel	Parallel to Span
Impact Factor	Design Code
Lane Load	64 lb/ft

SURCHARGE LOADS

Vertical Pressure	0.0 lb/sq. ft
Horiz. Pressure at Culvert Top	0.0 lb/sq. ft
Horiz. Pressure at Culvert Bottom	0.0 lb/sq. ft
Application Code	Additional Dead Load

FLUID LOADS

Depth of Fluid	8.0 ft
Fluid Density	62.5 pcf

LOAD COMBINATIONS

Load Factors:Std

	Self Weight	V. Earth	L. Earth	Water	Live
Max	1.25	1.30	1.35	1.00	1.75
Min	0.90	0.90	0.90	0.00	0.00

Load Modifiers:

Self Weight	V. Earth	L. Earth	Water	Live
1.00	1.05	1.05	1.00	1.00

Load Factor for Axial Thrust:
1.00

Number of Load Combinations:
4

Load Combinations: Std

Purpose	Self W	Earth	Lat E.	Fluid	V Live	AppVeh	Surch	V Sur	H Sur
MaxV/MaxH	Max	Max	Max	0.00	Max	Max	A	Max	Max
MaxV/MinH	Max	Max	Min	Max	Max	0.00	A	Max	0.00
MinV/MaxH	Min	Min	Max	0.00	0.00	Max	A	0.00	Max
Fatigue					0.00				

STRENGTH REDUCTION FACTORS

Flexure	1.00
Shear	0.90

MEMBER LOADS
Load Conditions 1 to 10

Load Condition	Member	Load Intensity at Start of Load (k/in./ft)	Load Intensity at End of Load (k/in./ft)	Distance from A-End to Start of Load (in.)	Distance from A-End to End of Load (in.)
1	1	0.015	0.015	0.0	252.0
1	2	0.000	0.000	0.0	0.0
1	3	0.026	0.026	0.0	252.0
1	4	0.000	0.000	0.0	0.0
2	1	0.155	0.155	0.0	252.0
2	2	0.000	0.000	0.0	0.0
2	3	0.155	0.155	0.0	252.0
2	4	0.000	0.000	0.0	0.0
3	1	0.000	0.000	0.0	0.0
3	2	0.035	0.065	0.0	110.0
3	3	0.000	0.000	0.0	0.0
3	4	0.065	0.035	0.0	110.0
4	1	0.000	0.000	0.0	0.0
4	2	0.000	-0.042	7.0	103.0
4	3	-0.002	-0.002	6.0	246.0
4	4	-0.042	0.000	7.0	103.0
5	1	0.000	0.000	0.0	0.0
5	2	0.035	0.065	0.0	110.0
5	3	0.000	0.000	0.0	0.0
5	4	0.065	0.035	0.0	110.0
6	1	0.000	0.000	0.0	0.0
6	2	0.000	0.000	0.0	0.0
6	3	0.000	0.000	0.0	0.0
6	4	0.000	0.000	0.0	0.0
7	1	0.000	0.000	0.0	252.0
7	2	0.000	0.000	0.0	0.0
7	3	0.000	0.000	0.0	252.0
7	4	0.000	0.000	0.0	0.0
8	1	0.000	0.000	0.0	0.0
8	2	0.011	0.008	0.0	110.0
8	3	0.000	0.000	0.0	0.0
8	4	0.008	0.011	0.0	110.0
9	1	0.000	0.000	0.0	252.0
9	2	0.000	0.000	0.0	0.0
9	3	0.000	0.000	0.0	252.0
9	4	0.000	0.000	0.0	0.0
10	1	0.000	0.000	0.0	0.0
10	2	0.000	0.000	0.0	110.0
10	3	0.000	0.000	0.0	0.0
10	4	0.000	0.000	0.0	110.0

****** MEMBER LOADS ******

Truck Number 1: AASHTO HS-20
Truck Number 2: AASHTO Interstate Tandem

TRUCK WHEEL LOADS ACTING ON CULVERT TOP SLAB
(Includes Impact Factor: 1 and multiple presence factor: 1.2)

Load Case Number	Truck Position Number	Truck Number	---- Load ---- Number	Intensity kip/in/ft	Distance from A-End To Start Of Load in.	To End of Load in.
11	1	1	1	0.003	84.00	252.00
11	1	1	2	0.009	0.00	84.00
11	1	1	3	0.000	0.00	0.00
12	2	1	1	0.004	102.06	252.00
12	2	1	2	0.009	0.00	102.06
12	2	1	3	0.000	0.00	0.00
13	3	1	1	0.004	110.06	252.00
13	3	1	2	0.009	0.00	110.06
13	3	1	3	0.000	0.00	0.00
14	4	1	1	0.004	156.03	252.00
14	4	1	2	0.010	0.00	156.03
14	4	1	3	0.000	0.00	0.00
15	5	1	1	0.004	183.02	252.00
15	5	1	2	0.010	15.02	183.02
15	5	1	3	0.010	0.00	15.02
16	6	1	1	0.004	210.00	252.00
16	6	1	2	0.010	42.00	210.00
16	6	1	3	0.010	0.00	42.00
17	7	1	1	0.005	236.98	252.00
17	7	1	2	0.010	68.98	236.98
17	7	1	3	0.010	0.00	68.98
18	8	1	1	0.000	0.00	0.00
18	8	1	2	0.011	95.97	252.00
18	8	1	3	0.010	0.00	95.97
19	9	1	1	0.000	0.00	0.00
19	9	1	2	0.011	141.94	252.00
19	9	1	3	0.010	0.00	141.94
20	10	1	1	0.000	0.00	0.00
20	10	1	2	0.011	149.94	252.00
20	10	1	3	0.010	0.00	149.94
21	11	1	1	0.000	0.00	0.00
21	11	1	2	0.011	168.00	252.00
21	11	1	3	0.010	0.00	168.00
22	1	2	1	0.005	72.00	231.80
22	1	2	2	0.005	0.00	72.00
22	1	2	3	0.000	0.00	0.00
23	2	2	1	0.005	90.06	249.86
23	2	2	2	0.005	0.00	90.06
23	2	2	3	0.000	0.00	0.00
24	3	2	1	0.006	98.06	252.00
24	3	2	2	0.006	2.06	98.06
24	3	2	3	0.006	0.00	2.06

25	4	2	1	0.008	144.03	252.00
25	4	2	2	0.008	48.03	144.03
25	4	2	3	0.008	0.00	48.03
26	5	2	1	0.009	171.02	252.00
26	5	2	2	0.009	75.02	171.02
26	5	2	3	0.009	0.00	75.02
27	6	2	1	0.010	198.00	252.00
27	6	2	2	0.010	102.00	198.00
27	6	2	3	0.010	0.00	102.00
28	7	2	1	0.012	224.98	252.00
28	7	2	2	0.012	128.98	224.98
28	7	2	3	0.012	17.18	128.98
29	8	2	1	0.013	251.97	252.00
29	8	2	2	0.013	155.97	251.97
29	8	2	3	0.013	44.17	155.97
30	9	2	1	0.000	0.00	0.00
30	9	2	2	0.013	201.94	252.00
30	9	2	3	0.013	90.14	201.94
31	10	2	1	0.000	0.00	0.00
31	10	2	2	0.013	209.94	252.00
31	10	2	3	0.013	98.14	209.94
32	11	2	1	0.000	0.00	0.00
32	11	2	2	0.013	228.00	252.00
32	11	2	3	0.013	116.20	228.00

TRUCK WHEEL LOADS ACTING ON CULVERT BOTTOM SLAB

Load Case Number	Truck Position Number	Truck Number	---Load Intensity--- at start	at end	Distance from A-End To Start Of Load	To End of Load
			kip/in/ft	kip/in/ft	in.	in.
11	1	1	0.001	0.009	0.00	252.00
12	2	1	0.002	0.010	0.00	252.00
13	3	1	0.002	0.010	0.00	252.00
14	4	1	0.003	0.012	0.00	252.00
15	5	1	0.005	0.012	0.00	252.00
16	6	1	0.007	0.012	0.00	252.00
17	7	1	0.009	0.011	0.00	252.00
18	8	1	0.011	0.010	0.00	252.00
19	9	1	0.011	0.010	0.00	252.00
20	10	1	0.011	0.010	0.00	252.00
21	11	1	0.011	0.010	0.00	252.00
22	1	2	0.003	0.005	0.00	252.00
23	2	2	0.005	0.006	0.00	252.00
24	3	2	0.006	0.006	0.00	252.00
25	4	2	0.008	0.008	0.00	252.00
26	5	2	0.009	0.009	0.00	252.00
27	6	2	0.010	0.010	0.00	252.00
28	7	2	0.013	0.009	0.00	252.00
29	8	2	0.016	0.005	0.00	252.00
30	9	2	0.018	0.000	0.00	242.79
31	10	2	0.017	0.000	0.00	230.79
32	11	2	0.017	0.000	0.00	203.70

****** SUMMARY OF SHEAR ANALYSES OF SECTIONS ******

Section (1)	Controlling Load Combin. (2)	Ultimate Shear Vu (kip/ft)	Allowable Shear Phi*Vc (kip/ft)	Diagonal Tension Index	Depth to Reinf. (in.)	Required Shear Steel (3) (in.²/ft/line)
13 (t)	1-pos	25.1	27.9	0.90	12.19	0.000
12 (t)	1-pos	25.1	27.9	0.90	12.19	0.000
45 (t)	1-neg	-25.3	27.9	0.91	12.19	0.000
44 (t)	1-neg	-25.3	27.9	0.91	12.19	0.000
14 (s)	1-neg	-4.2	14.2	0.30	10.06	0.000
15 (s)	1-neg	-4.2	14.2	0.30	10.06	0.000
16 (s)	1-neg	5.3	14.0	0.37	10.06	0.000
17 (s)	1-neg	5.3	14.0	0.37	10.06	0.000
18 (b)	1-neg	-26.3	27.9	0.94	12.19	0.000
19 (b)	1-neg	-26.3	27.9	0.94	12.19	0.000
97 (b)	1-pos	26.6	27.9	0.95	12.19	0.000
96 (b)	1-pos	26.6	27.9	0.95	12.19	0.000

Notes

1. (t) top slab, (b) bottom slab, (s) side wall

2. Load combination that controls shear steel requirements. Other load combinations may control stirrup spacing and increased flexural steel requirements per AASHTO LRFD section 5.8.3.5

3. Required shear steel area based on user specified stirrup spacing. If the user defined stirrup spacing is too large, based on an examination of the entire slab, the shear steel area will change from the value shown in this table. See SHEAR DESIGN TABLE on the next page for shear steel design.

****** SHEAR DESIGN TABLE ******

Member	Top Slab	Sidewall	Bottom Slab
Section Controlling Stirrup Design	45	17	96
Load Combo Controlling Stirrup Design	1-neg	1-neg	1-pos
Vu*D/Mu (1)	1.534	-0.065	-1.507
Ultimate Shear (kip/ft)	-25.27	5.26	26.58
Ultimate Thrust (kip/ft)	5.56	24.36	8.01
Reinf. Ratio	0.0023	0.0122	0.0023
Depth to Reinf. (in.)	12.19	10.06	12.19
Distance to A-END, (in.)	225.94	25.06	26.06
Diagonal Tension Phi * Vc (kip/ft)	27.90	14.04	27.90
Ultimate Shear/ Conc.Strength, Phi*Vc	0.91	0.37	0.95
Shear Steel Area (in^2/ft/line)	---	---	---
Stirrup Spacing (in.)	---	---	---
Number of Lines of Stirrups from A-end	---	---	---
Stirrups Start at	---	---	---
Number of Lines of Stirrups from B-end	---	---	---
Stirrups Start at	---	---	---
Flex. Steel Provisions Per AASHTO LRFD Section5.8.3.5	provisions satisfied / not applic.	provisions satisfied / not applic.	provisions satisfied / not applic.

Notes

1. Vu*d/Mu is limited to a maximum of 1.0 for design.

******* FLEXURE DESIGN TABLE *******

rebar/ wall / face	Depth to Reinf in.	Ultimate Moment kip-in /ft	Ultimate Thrust kip/ft	Flex. Reinf. in²/ft	Max Reinf Area in²/ft	Crack Index	Governing Reinf Area in²/ft	Governing Mode	Governing section #	Governing section pos	Governing load combo
(1)				(2)	(3)	(4)	(5)	(6)		(7)	(8)
AS1,s,o	10.1	-910.9	24.36	1.473	2.707	0.82	1.473	Flexure	7	15.0	2
AS2,t,i	12.1	1117.5	1.65	1.668	3.541	0.81	1.668	Flexure	1	126.0	2
AS3,b,i	12.1	1145.4	2.56	1.707	3.510	0.81	1.707	Flexure	11	126.0	2
AS4,s,i	18.1	-937.1	24.36	0.000	--	0.00	0.288	Min Stl	8	7.0	1
AS7,t,o	12.1	--	1.65	0.000	--	0.00	0.336	Min Stl	32	130.0	2
AS8,b,o	12.1	--	2.56	0.000	--	0.00	0.336	Min Stl	84	122.0	2

Notes:
1. t-top slab, b-bottom slab, s-sidewall; i-inside face; o-outside face
2. Required reinforcing to develop ultimate flexural strength.
3. Maximum allowable flexural reinforcement area per compression provisions.
4. Crack Index is defined as the total service load stress divided by the allowable total service load stress.
5. Reinforcing required to meet all design criteria. The governing criteria is indicated under the column 'Governing Mode'. If 'REDES' the culvert must be redesigned because the required steel amount exceeds the allowable amount as dictated by compression provisions.
6. Governing modes:
   - Flexure - governed by provisions for flexure and axial force.
   - Min Stl - governed by provisions for minimum steel.
   - Crack - governed by provisions for cracking. The reinforcing may be reduced by decreasing the maximum reinforcing spacing.
   - Compres - the culvert must be redesigned because the required steel amount exceeds the allowable amount as dictated by compression provisions. Try increasing the depth of the slab or decreasing loads.
   - Fatigue - governed by provisions for fatigue
7. Location of section, measured with respect to End A (center) line dimensions of culvert).
8. Pos/Neg indicates truck positioned to produce maximum positive/negative moment.
9. Minimum flexural reinforcing computed as 0.002 times the gross concrete section.

Sidewall outside face steel (AS1) must be bent at the corner and extended:

top slab: 19 inches* + tension lap splice length
bottom slab: 19 inches* + tension lap splice length
*measured from the bend point

There may be negative moment in the top slab to 47 inches from the bend point. Development lengths must be added.

There may be negative moment in the bottom slab to 47 inches

from the bend point. Development lengths must be added.

BOX CULVERT DESIGN SUMMARY SHEET
20.00 ft Span x 8.00 ft Rise

****

I N S T A L L A T I O N D A T A

Height of Fill Over Culvert, ft	12.00
Soil Unit Weight, pcf	140.
Minimum Lateral Soil Pressure Coefficient	0.250
Maximum Lateral Soil Pressure Coefficient	0.500
Soil-Structure Interaction Factor	1.109
Installation Type	Embankment/Compacted

M A T E R I A L P R O P E R T I E S

Minimum Specified Reinforcing Yield Strength, ksi	60.00
Concrete - Specified Compressive Strength, ksi	5.00

G E O M E T R Y

Top Slab Thickness, in.	14.0
Side Wall Thickness, in.	12.0
Bottom Slab Thickness, in.	14.0
Top Horizontal Haunch Dimension, in.	8.0
Bottom Horizontal Haunch Dimension, in.	8.0
Top Vertical Haunch Dimension, in.	8.0
Bottom Vertical Haunch Dimension, in.	8.0
Concrete Cover Over Steel, in.	
Top Slab - Outside Face	1.50
Bottom Slab - Outside Face	1.50
Side Wall - Outside Face	1.50
Top Slab - Inside Face	1.50
Bottom Slab - Inside Face	1.50
Side Wall - Inside Face	1.50

R E I N F O R C I N G D A T A

LOCATION	AREA (in.²/ft)	STIRRUPS REQUIRED?
TRANSVERSE		
Side Wall - Outside Face(AS1)	1.473	No
Top Slab - Inside Face(AS2)	1.668	No
Bottom Slab - Inside Face(AS3)	1.707	No
Side Wall - Inside Face(AS4)	0.288	No
Top Slab - Outside Face(AS7)	0.336	No
Bottom Slab - Outside Face(AS8)	0.336	No

Sidewall outside face steel (AS1) must be bent at the corner and extended:

top slab: 19 inches* + tension lap splice length
bottom slab: 19 inches* + tension lap splice length

*measured from the bend point

There may be negative moment in the top slab to 47 inches from the bend point. Development lengths must be added.

There may be negative moment in the bottom slab to 47 inches from the bend point. Development lengths must be added.

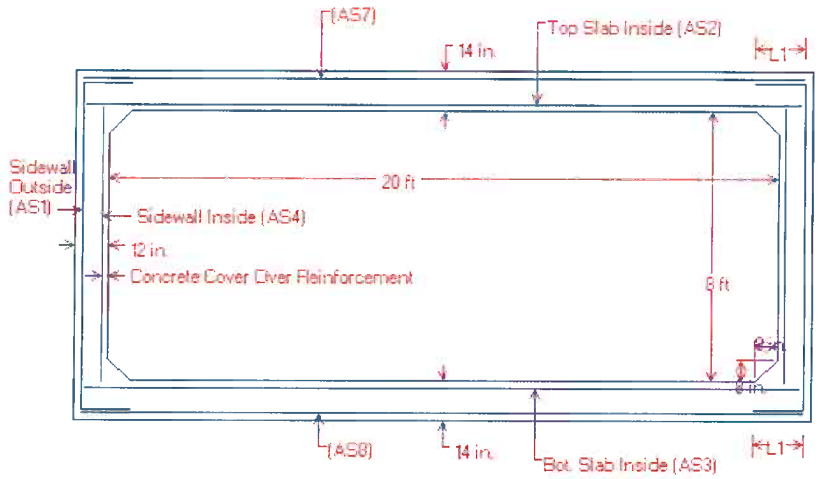

* <L1> is Splice Length
* (AS7) is Top Slab Outside
* (AS8) is Bottom Slab Outside
* See Box Culvert Design Summary Sheet for transverse and distribution reinforcement, as required.
* For sidewall thicknesses of 6 in. and above, extend AS2 and AS3 a min. of 4 in. beyond the inside face of the sidewall. For thicknesses less than 6 in., extend AS2 and AS3 at least to within 1-1/2 in. of the outside face of the sidewall.

Notes:

1) Other reinforcement schemes that provide the required reinforcement areas at all locations identified in the program output are acceptable.
2) Longitudinal reinforcement is not shown for clarity, see AASHTO M259 for longitudinal reinforcement and for additional requirements.

Section 3
CSI LRFD Wing wall 1&2
Calculations

Concrete Systems Inc.
9 Commercial St., Hudson, NH,03051
Phone 603-889-4163
Fax 603-889-2417

AASHTO LRFD WINGWALL CALCULATIONS

PROJECT NUMBER: C22283 — WW 1 & 2
PROJECT NAME: PROPOSED BRIDGE: VT ROUTE 58 BRIDGE #6 IRASBURG, VT
DATE: Apr 3, 2015
BY: CV

INPUT PARAMETERS:

Wall geometry

Panel Height (high) = 14.33 ft
Panel Height (low) = 9.66 ft
Wall Panel Length = 11.50 ft
Entire Wall length = 11.50 ft
Length of flat = 1.00 ft
wall thickness = 12
Wingwall Drop *(high-low)* = 4.67 ft
Wall slope = 0.4448
Max fill ht. *(t/road to b/ww)* = 19.67 ft
Fill Slope *(perp. to road)* = 2.0
Wall angle *(perp. to road)* = 45
Fill slope *(perp. to wall)* = 2.83
Wingwall Panel Connected to Bridge Unit= ☑ Yes

Soil properties

γ_{soil} = 140 pcf
γ_{conc} = 150 pcf
$\gamma_{LLsurcharge}$ = 120 pcf
ϕ_{AB} = 32
θ_{AB} = 0
δ_{AB} = 24
ϕ_{BC} = 32
θ_{BC} = 30
δ_{BC} = 16

NONE

Foundation

D_{ftg} = 3.0 ft
B_{ftg} = 2.5 ft
o = 9 in
Q_{soil} = 3.0 KSF

Railing or barrier

T/WW to load = 2.00 ft
impact load = 10.00 K

	Distance to anchor	Overriding perp. slope @ anchor	Wall height @ anchor	Contrib. width	Perp. slope used @ anchor	h_{eq} LL surch	Anchor Type	Check 'e' & Bearing
Anchor #1	3.00 ft	n	10.99 ft	4.88 ft	2.83 ft	0.00 ft	F	OK
Anchor #2	6.75 ft	n	12.66 ft	3.25 ft	2.83 ft	0.00 ft	F	OK
Anchor #3	9.50 ft	n	13.89 ft	2.38 ft	2.83 ft	0.00 ft	F	OK
Anchor #4	0.00 ft	n	0.00 ft	0.00 ft	2.83 ft	0.00 ft	A	N/A
Anchor #5	0.00 ft	n	0.00 ft	0.00 ft	2.83 ft	0.00 ft	A	N/A

CALCULATION NOTES:

1. Wingwall calculations are done in accordance with the current edition of the *AASHTO LRFD Bridge Design Specifications* .
2. Moments are summed about the *toe (face) of the wingwall* (point "o" on attached "Pressure Diagram").
3. K_a is calculated using equation found in former AASHTO LRFD Specifications Equation 3.11.5.3-1

K_a =

4. Only 80% of the soil unit weight is used for the eccentricity/ stability calculation. This is a conservative assumption as explained in the full HITEC report "Evaluation of the CON/SPAN® Wingwall System"
5. The full 100% of the soil unit weight is used for the bearing calculations.
6. These calculations conservatively assume that the wall anchor has the same unit weight as soil.
7. The wingwall angle (in plan view) is measured from perpendicular to roadway.
8. Barrier loads are distributed per AASHTO LRFD Specifications Section 13

Anchor 1			
SOIL PROPERTY	**DESCRIPTION**	**VALUE section AB**	**VALUE section BC**
ϕ	friction angle of soil	32	32
θ	angle of wall to the y-axis	0	30
δ	wall-soil friction angle *(measured from a perpendicular with the wall)* =0, if significant vibrations of backfill or modules settling more than backfill. = 0.5*ϕ, if modules are uniform width. = 0.75*ϕ, if averaged pressure surface	24	16
x	side slopes from road (x:1)	2.0	
α	wingwall angle (angle w/ perpendicular to road)	45	
	slope of backfill (perpendicular to wall)	2.83	
β	angle of backfill (perpendicular to wall)	19.5	19.5
	$(K_a)_{AB}$ =	0.37	$(K_a)_{BC}$ = 0.13

Anchor 1

VARIABLE	DESCRIPTION OF VARIABLE	VALUE	
H	wingwall design height at anchor location (feet)	10.99	
h_{surch}	height of live load surcharge (feet)	0.00	
t	thickness of wingwall (inches)	12	
δ	wall friction angle for section AB	24	
β	angle of backfill (degrees)	19.5	
L	length of anchor (feet)	8.04	F
γ_s	unit weight of backfill (kcf)	140	
γ_c	unit weight of concrete (kcf)	150	
γ_{surch}	unit weight of surcharge (kcf)	120	*(per AASHTO LRFD 3.11.6.4)*

Description	Vertical Reaction (k/ft)	Horizontal Reaction (k/ft)	Lever Arm (ft)	Disturbing Moment (ft-k/ft)	"Stability" Resisting Moment (ft-k/ft)	"Bearing" Resisting Moment (ft-k/ft)
wall (W_w)	1.65		0.50		0.82	0.82
soil I_A	1.60		6.36		8.14	10.17
soil I_B	8.44		5.02		33.88	42.35
soil II_A	2.57		3.63		7.46	9.33
soil II_B	0.68		7.02		3.84	4.80
$W_{surcharge(vert)}$	0.00		5.02		0.00	0.00
$W_{parapet}$	0.00		0.50		0.00	0.00
Soil Pressure						
$(P_{AB})_v$	1.13		9.04		10.20	10.20
$(P_{AB})_h$		2.53	6.95	17.60		
$(P_{BC1})_v$	-0.22		7.89		-1.70	-1.70
$(P_{BC1})_h$		0.87	1.50	1.30		
$(P_{BC2})_v$	-0.04		7.50		-0.31	-0.31
$(P_{BC2})_h$		0.17	0.83	0.14		
$P_{surcharch(hor)}$		0.00	6.92	0.00		
TOTALS =	15.81	3.57		19.04	62.32	75.65

AASHTO LRFD C11.6.3.3 states: The specified criteria for the location of the resultant, coupled with investigation of the bearing pressure, replaces the investigation of the ratio of stabilizing moment to overturning moment. See Section III Soil Bearing Pressure.

Anchor 2			
SOIL PROPERTY	DESCRIPTION	VALUE section AB	VALUE section BC
ϕ	friction angle of soil	32	32
θ	angle of wall to the y-axis	0	30
δ	wall-soil friction angle *(measured from a perpendicular with the wall)* =0, if significant vibrations of backfill or modules settling more than backfill. = 0.5*ϕ, if modules are uniform width. = 0.75*ϕ, if averaged pressure surface	24	16
x	side slopes from road (x:1)	2.0	
α	wingwall angle (angle w/ perpendicular to road)	45	
	slope of backfill (perpendicular to wall)	2.83	
β	angle of backfill (perpendicular to wall)	19.5	19.5
	$(K_a)_{AB}$ =	0.37	$(K_a)_{BC}$ = 0.13

Anchor 2

VARIABLE	DESCRIPTION OF VARIABLE	VALUE	
H	wingwall design height at anchor location (feet)	12.66	
h_{surch}	height of live load surcharge (feet)	0.00	
t	thickness of wingwall (inches)	12	
δ	wall friction angle for section AB	24	
β	angle of backfill (degrees)	19.5	
L	length of anchor (feet)	8.04	F
γ_s	unit weight of backfill (kcf)	140	
γ_c	unit weight of concrete (kcf)	150	
γ_{surch}	unit weight of surcharge (kcf)	120	*(per AASHTO LRFD 3.11.6.4)*

Description	Vertical Reaction (k/ft)	Horizontal Reaction (k/ft)	Lever Arm (ft)	Disturbing Moment (ft-k/ft)	"Stability" Resisting Moment (ft-k/ft)	"Bearing" Resisting Moment (ft-k/ft)
wall (W_w)	1.90		0.50		0.95	0.95
soil I_A	1.60		6.36		8.14	10.17
soil I_B	10.31		5.02		41.42	51.77
soil II_A	2.57		3.63		7.46	9.33
soil II_B	0.68		7.02		3.84	4.80
$W_{surcharge}$	0.00		5.02		0.00	0.00
$W_{parapet}$	0.00		0.50		0.00	0.00
Soil Pressure						
$(P_{AB})_v$	1.52		9.04		13.76	13.76
$(P_{AB})_h$		3.42	7.50	25.64		
$(P_{BC1})_v$	-0.25		7.88		-1.98	-1.98
$(P_{BC1})_h$		1.01	1.50	1.51		
$(P_{BC2})_v$	-0.04		7.88		-0.33	-0.33
$(P_{BC2})_h$		0.17	0.83	0.14		
P_{surch}		0.00	7.75	0.00		
TOTALS =	18.30	4.59		27.29	73.26	88.47

AASHTO LRFD C11.6.3.3 states: The specified criteria for the location of the resultant, coupled with investigation of the bearing pressure, replaces the investigation of the ratio of stabilizing moment to overturning moment. See Section III Soil Bearing Pressure.

Anchor 3			
SOIL PROPERTY	**DESCRIPTION**	**VALUE section AB**	**VALUE section BC**
ϕ	friction angle of soil	32	32
θ	angle of wall to the y-axis	0	30
δ	wall-soil friction angle *(measured from a perpendicular with the wall)* =0, if significant vibrations of backfill or modules settling more than backfill. = 0.5*ϕ, if modules are uniform width. = 0.75*ϕ, if averaged pressure surface	24	16
x	side slopes from road (x:1)	2.0	
α	wingwall angle (angle w/ perpendicular to road)	45	
	slope of backfill (perpendicular to wall)	2.83	
β	angle of backfill (perpendicular to wall)	19.5	19.5
	$(K_a)_{AB}$ =	0.37	$(K_a)_{BC}$ = 0.13

Anchor 3

VARIABLE	DESCRIPTION OF VARIABLE	VALUE	
H	wingwall design height at anchor location (feet)	13.89	
h_{surch}	height of live load surcharge (feet)	0.00	
t	thickness of wingwall (inches)	12	
δ	wall friction angle for section AB	24	
β	angle of backfill (degrees)	19.5	
L	length of anchor (feet)	8.04	F
γ_s	unit weight of backfill (kcf)	140	
γ_c	unit weight of concrete (kcf)	150	
γ_{surch}	unit weight of surcharge (kcf)	120	*(per AASHTO LRFD 3.11.6.4)*

Description	Vertical Reaction (k/ft)	Horizontal Reaction (k/ft)	Lever Arm (ft)	Disturbing Moment (ft-k/ft)	"Stability" Resisting Moment (ft-k/ft)	"Bearing" Resisting Moment (ft-k/ft)
wall (W_w)	2.08		0.50		1.04	1.04
soil I_A	1.60		6.36		8.14	10.17
soil I_B	11.69		5.02		46.95	58.68
soil II_A	2.57		3.63		7.46	9.33
soil II_B	0.68		7.02		3.84	4.80
$W_{surcharge}$	0.00		5.02		0.00	0.00
$W_{parapet}$	0.00		0.50		0.00	0.00
Soil Pressure						
$(P_{AB})_v$	1.85		9.04		16.70	16.70
$(P_{AB})_h$		4.15	7.91	32.82		
$(P_{BC1})_v$	-0.28		7.88		-2.18	-2.18
$(P_{BC1})_h$		1.11	1.50	1.66		
$(P_{BC2})_v$	-0.04		7.88		-0.33	-0.33
$(P_{BC2})_h$		0.17	0.83	0.14		
P_{surch}		0.00	8.36	0.00		
TOTALS =	20.16	5.43		34.62	81.62	98.22

AASHTO LRFD C11.6.3.3 states: The specified criteria for the location of the resultant, coupled with investigation of the bearing pressure, replaces the investigation of the ratio of stabilizing moment to overturning moment. See Section III Soil Bearing Pressure.

II. CHECK OVERTURNING STABILITY AT CONNECTION PLATES

The connection plates provide stability for the portion of the wall not supported by the anchors, i.e., the section closest to the culvert. (See wingwall sketch)

Data:

number of plates = 2

ϕ = 32

δ = 24

γ_s = 0.140 kcf

$\gamma_{(surcharge)}$ = 0.120 kcf

wall height @ plates (H) = **14.33 ft**

Live load surcharge (h) = **0.00 ft**

section width for plates (S) = **1.0 ft**

$y_{Psh} = H/3$ = 4.8 ft

$y_{PLL} = H/2$ = 7.2 ft

y_{p1} = **0.75 ft**

y_{p2} = **8.75 ft**

A_{bolt} = 0.79

t_{plate} = 1.00 in

$\phi F_{(bolt)}$ = 30 ksi

$F_{y(plate)}$ = 36 ksi

Find soil pressure on section:

Because the wall is more rigid at the plates, at-rest soil pressure coefficient (K_o) is used.

$K_o = 1\text{-}\sin\phi = 0.47$ *(AASHTO LRFD eq. 3.11.5.2-1)*

$P_{sh} = (^1/_2)\gamma_s K_o H^2(S)(\cos\delta) = 6.17$ K

$P_{LLh} = K_o\gamma_s HhS(\cos\delta) = 0.00$ K

$P_{impact} = P_{imp}S/L_{distr} = 0$

Find reaction at plate:

Sum moments about bottom plate, p_1

$\Sigma M_{p1} = 0 = P_{sh}(y_{Psh} - y_{p1}) - p_2(y_{p2} - y_{p1})$ *(dead load)*

$\Sigma M_{p1} = 0 = P_{LL}(y_{PLL} - y_{p1}) - p_{2LL}(y_{p2} - y_{p1}) + P_{imp}(y_{imp} - y_{p1}$ *(live load)*

$p_2 = \dfrac{P_{sh}(y_{Psh} - y_{p1})}{(y_{p2} - y_{p1})} = 3.11$ K $\qquad p_1 = P_{sh} - p_2 = 3.07$ K

$p_{2LL} = \dfrac{P_{LLh}(y_{pLL} - y_{p1}) + P_{imp}(y_{imp} - y_{p1})}{(y_{p2} - y_{p1})} = 0.00$ K $\qquad p_{1LL} = P_{LL} + P_{imp} - p_{2LL} = 0.00$ K

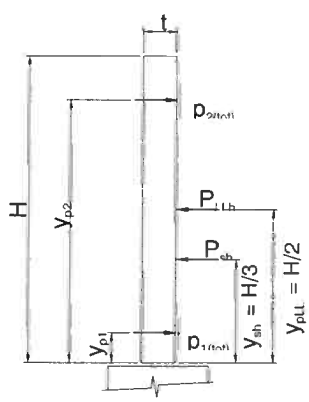

Find factored reaction:

Load factors are per AASHTO LRFD 3.4.1-1 & Table 3.4.1-2

$p_{fac} = \gamma p_{max(DL)} + (1.75)p_{max(LL)}$

$p_{fac} = (1.35)p_{(DL)} + (1.75)p_{(LL)}$

$p_{1(tot,\ factored)}$ = 4.14 K

$p_{2(tot,\ factored)}$ = 4.19 K ***Controls***

$p_{(max,\ factored)}$ = 4.19 K

Check bolts:

The special Richmond Screw Anchor *"wingwall insert" pullout capacity was obtained from the manufacturer and has approx. 3:1 safety factor.*

Pullout capacity = 16.5 k/bolt ***Controls***

Bolt tension = $\phi F A_{bolt}$ = 23.7 k/bolt

$F.S. = \dfrac{\text{Capacity* 2 bolts}}{(p_{fac})} = 7.87$ *> 1.0, OK*

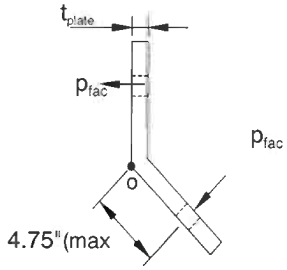

Check bending of plate:

Sum moments about corner of plate, point "o"

$\Sigma M_o = (p_{fac})(4.75") = 19924$ lb-in

$I_{pl} = bh^3/12 = 0.83$ in^4

$\sigma_{max} = \dfrac{My}{I_{pl}} = 12$ ksi $< \phi F_y = 0.9F_y$ *OK*

(AISC LRFD-F2 states $\phi_b = 0.9$)

length of connection plate is 10"

III. CHECK SOIL BEARING PRESSURE AND SLIDING UNDER FOOTING

The reaction will be supported on the horizontal portion of the anchor plus the footing.

R_v = Total vertical reaction at anchor (using 100% of soil weight).

R_h = Total horizontal reaction at anchor.

M_D = Disturbing moment at anchor.

M_{Rb} = Resisting moment due to 100% of soil at anchor.

Summary of loads at anchors

anchor	anchor base length	R_v ($^K/_F$)	R_h ($^K/_F$)	M_D ($^{K\text{-}F}/_F$)	M_{Rb} ($^{K\text{-}F}/_F$)
1	5.73	15.81	3.57	19.04	75.65
2	5.73	18.30	4.59	27.29	88.47
3	5.73	20.16	5.43	34.62	98.22
4	1.73	0.00	0.00	0.00	0.00
5	1.73	0.00	0.00	0.00	0.00

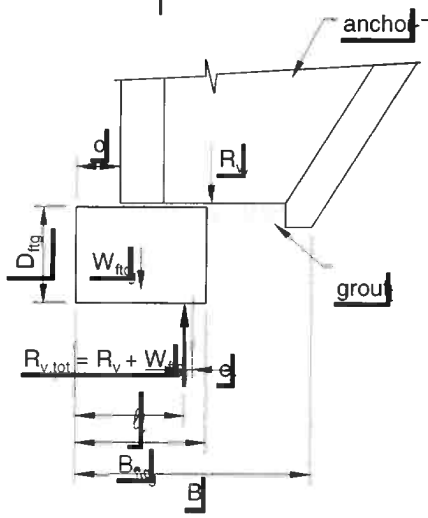

Check the bearing pressure under the wall

D_{ftg} = 3.0 ft

B_{ftg} = 2.5 ft

o = 9 in

W_{ftg} = 1.13 klf

Q_{allow} = 3.0 KSF

$R_{v,tot}$ = total vertical reaction ($R_v + W_{ftg}$)

B = bearing width

= maximum of (anchor base length + o) or B_{ftg}

ℓ = location of vertical resultant ($R_{v,tot}$) along bearing width

$$= \frac{R_v((M_{Rb}-M_D)/R_v + o) + W_{ftg}(B/2)}{R_{v,tot}}$$

e = eccentricity of resultant

= B/2 - ℓ

B' = adjusted bearing width

= B - 2e

q = bearing pressure *(must be less than Q_{allow})*

= $R_{v,tot}$ / B'

Check bearing pressure at each anchor

anchor	B (ft)	ℓ (ft)	e	check e	B' (ft)	q	check q
1	7.48	4.13	-0.39	OK	6.71	2.52	OK
2	7.48	3.93	-0.19	OK	7.10	2.73	OK
3	7.48	3.76	-0.02	OK	7.43	2.86	OK
4	0.00	0.00	0.00	*n/a*	0.00	0.00	*n/a*
5	0.00	0.00	0.00	*n/a*	0.00	0.00	*n/a*

Check the sliding factor of safety

$R_R = \phi * R_{V,tot} * .8 * \tan \phi$ *(AASHTO LRFD 10.6.3.4)*

(must be >R_h)

ϕ = 0.9 *from AASHTO LRFD Table 10.5.5.2.2-1 for precast concrete on sand*

Check sliding at each anchor

anchor	$R_{v,tot}$ (k/f)	R_R (k/f)	R_h	check $R_R > R_h$
1	16.94	7.62	3.57	*OK*
2	19.42	8.74	4.59	*OK*
3	21.28	9.58	5.43	*OK*
4	0.00	0.00	0.01	*n/a*
5	0.00	0.00	0.01	*n/a*

IV. CHECK BENDING OF FOOTING CROSS SECTION

Bending need not be considered in footings when the footing depth, D, exceeds the projection, pr, of the footing beyond the edge of the wall.

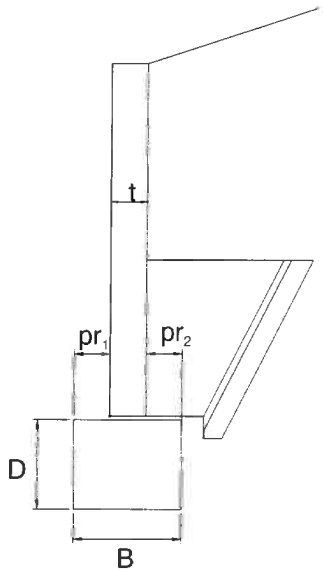

pr_1 = offset(o) = 9 in

pr_2 = B - o - t = 9 in **Controls**

pr_{max} = 9 in

projection < D *OK*

Use minimal steel stirrups
#4 @ 48 inches o.c.

V. CHECK WALL SECTION - BENDING AND SHEAR (vertical bars)

Assumptions: 1. Wall stem is cantilevered from anchor.
2. Use active earth pressure because wall can deflect at top.
3. Use K_a and δ from Anchor Stability Calculations.

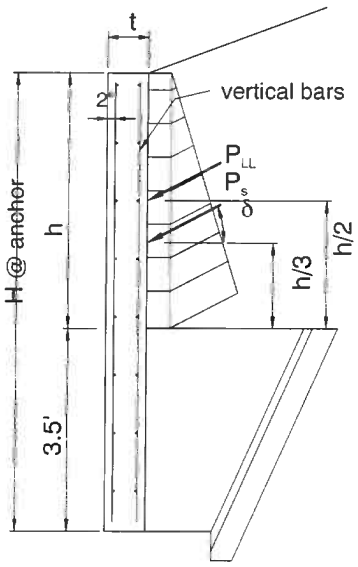

Horizontal loads:

$P_{sh} = (^1/_2)\gamma_s K_a h^2(\cos\delta)$

$P_{LLh} = \gamma_s K_a h(h_{surcharge})(\cos\delta)$

$P_{impact} = P_{imp}/L_{distr}$

Factored forces:

Load factors are per AASHTO LRFD 3.4.1-1 & Table 3.4.1-2

M_u = Section width$[(1.35)P_{sh}(h/3) + (1.75)P_{LLh}(h/2) + (1.75)P_{imp}(h+y_{imp})]$

V_u = Section width$[(1.35)P_{sh} + (1.75P_{LLh} + (1.75P_{imp}]$

Summary of forces at anchors

anchor	H (ft)	h (ft)	$h_{surcharge}$ (ft)	P_{sh} (k/ft)	P_{LLh} (k/ft)	P_{imp} (k/ft)	M_u (k-ft)	V_u (k)
1	10.99	7.49	0.00	1.33	0.00	0.00	21.90	8.77
2	12.66	9.16	0.00	1.99	0.00	0.00	26.68	8.73
3	13.89	10.39	0.00	2.56	0.00	0.00	28.39	8.20
4	0.00	0.00	0.00	0.00	0.00	0.00	0.00	0.00
5	0.00	0.00	0.00	0.00	0.00	0.00	0.00	0.00

Check bending (reinforcment) at anchors

f'_c = 5000 psi

f_y = 60000 psi

ϕ_b = 0.9 *(AASHTO LRFD 5.4.2.1)*

$m = f_y/0.85f'_c$ = 14.12

d = 9.50 in

b = anchor's contrib. width

$$R_u = \frac{M_u}{\phi_b b d^2}$$

$$\rho_{reqd} = \frac{1}{m}\left(1-\sqrt{1-\frac{2mR_u}{f_y}}\right)$$

ρ_{min} = *AASHTO LRFD 5.7.3.3.2 states the minimum reinforcement is the lesser of 1.2Mcr OR 1.33 times the factored moment required by strength.*

anchor	R_u (psi)	ρ_{reqd}	ρ_{cr}	ρ_{min}	$A_{s\ min}$ (in^2)	$A_{s\ actual}$ (in^2)	check
1	55	0.0009	0.0032	0.0012	0.67	6.92	OK
2	101	0.0017	0.0032	0.0022	0.82	6.71	OK
3	147	0.0025	0.0032	0.0032	0.87	6.59	OK
4	0	0.0000	0.0032	0.0000	0.00	#######	N/A
5	0	0.0000	0.0032	0.0000	0.00	#######	N/A

Check shear

$V_c = (.0316)*\beta \sqrt{f'_c}\, b_v d_v$ *(V_c calculated by AASHTO LRFD eq'n 5.8.3.3-3)*

$\phi = 0.9$ *(AASHTO LRFD 5.5.4.2.1)*

$\beta = 2$ *(AASHTO LRFD 5.8.3.4.1)*

$d_v = .9*d$ or $.72*h$ *whichever is greater (AASHTO LRFD 5.8.2.9)*

anchor	ϕV_c	check $V_u < \phi V_c$
1	64.29	*OK*
2	42.86	*OK*
3	31.32	*OK*
4	0.00	*N/A*
5	0.00	*N/A*

VI. CHECK TYPE 'F' ANCHOR ATTACHMENT

Check capacity of connector for pullout (truncated pyramid failure), shear, tension, and combined shear & tension

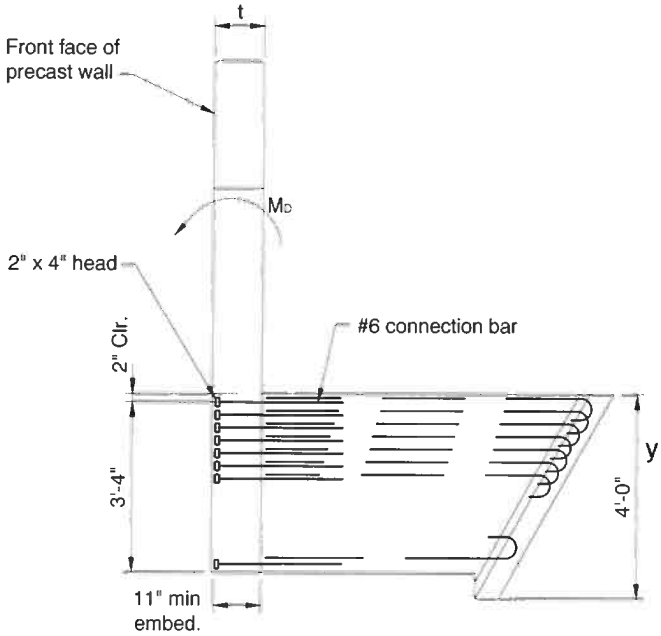

embedment depth (ℓ_e)= **11 in**

Attachment depth = 42 in

X head dimension (Xd_{head}) = 3 in

Y head dimension (Yd_{head}) = 3 in

Bar size = **# 6**

rows = **7**

row spacing = **3 in**

wall thickness (t) = 12 in

x = Xd_{head} (*since only 1 column*) = 3 in

y = (#rows-1)(row spacing) + Yd_{head} = 21 in

z = min(x,y) = 3 in

h_{min} = (z + 2ℓ_e)/2 = 12.5 in

A_R = (x+2ℓ_e-2t)(y+2ℓ_e-2t) = 19.0 in^2

f'_c = **4000 psi**

f_y = **60000 psi**

$\phi_{concrete}$ = 0.85

ϕ_{steel} = 0.90

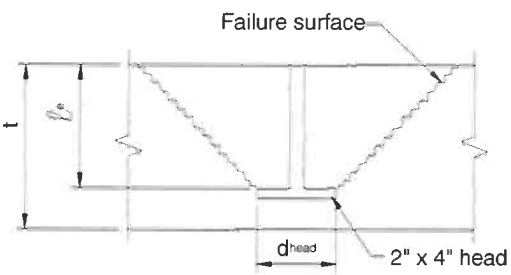

TENSION CAPACITY (Per PCI Design Handbook §6.5.2.1)

t < hmin: failure surface penetrates slab

Find pullout capacity of concrete

if t >= h_{min}, ϕP_c = ϕ2.67sqrt(f'c)(x+2ℓ_e)(y+2ℓ_e)

if t < h_{min}, ϕP_c = ϕ2.67sqrt(f'c)[(x+2ℓ_e)(y+2ℓ_e) - A_R]

ϕP_c = 151.57 K

Find tension capacity of studs

ϕP_y = $\phi f_y(A_{bar})$(#bars)

ϕP_y = 167.00 K

controlling tension capacity (ϕP) = 151.57 K

Find moment capacity of anchor

Moment capacity of anchor (ϕM_n) = ϕP(d-a/2)

d = attachment depth - bar cover - (y-Yd_{head})/2 = 31 in

a = $A_s f_y$/0.85f'_cb = 9.10 in

ϕM_n = 334.12 k-f

SHEAR CAPACITY (Per PCI Design Handbook §6.5.2.2)

Find shear capacity of concrete

$\phi V_c = \phi V'_c C_w C_t C_c$

$\phi V'_c = \phi 12.5 d_e^{1.5} \text{sqrt}(f'_c)$	= 167.6 K
$C_w = 1 + \text{spacing}/3.5d_e < \#\text{columns}$	= 1.0
$C_t = t/1.3d_e <= 1.0$	= 0.23
$C_c = 0.4 + 0.7d_c/de <= 1.0$	= 1.0
d_e = attachment depth - cover - bar dia/2	= 40 in
d_c = distance to side of wingwall	= 36 in

$\phi V_c = \phi V'_c C_w C_t C_c =$ 39.05 K

Find shear capacity of studs

$\phi V_y = \phi 0.9 f_y A_{bar}(\#\text{bars})$

$\phi V_y =$ 150.30 K

controlling shear capacity (ϕV) = 39.05 K

FIND LOADS

Unfactored loads on anchors:

$M_{D(DL)}$ = (sec width)$M_{D(anchor)}$

$M_{D(LL)}$ = (sec width)($M_{D(anchor)}$ + P_{imp}*(wall ht + y_{imp}))

Factored loads:

Load factors are per AASHTO 3.22.1 & Table 3.22.1A

$M_u = (1.3)(1.3)M_{D(DL)} + (1.3)(1.67)M_{D(LL)}$

$P_u = M_u$ /(d-a/2)*cos(bar angle)

$V_u = M_u$ /(d-a/2)*sin(bar angle)

bar angle = 0°

Summary of forces

anchor	$M_{D(DL)}$ ft-k	$M_{D(LL)}$ ft-k	M_u ft-k	P_u k	V_u k
1	92.8	0.0	156.9	71.2	0.0
2	88.7	0.0	149.9	68.0	0.0
3	82.2	0.0	139.0	63.0	0.0
4	0.0	0.0	0.0	0.0	0.0
5	0.0	0.0	0.0	0.0	0.0

Summary of results

anchor	check $\phi M_n > M_u$	check $\phi P > P_u$	check $\phi V > V_u$	check combined V_c & P_c	check combined V_s & P_s
1	*OK*	*OK*	*OK*	*OK*	*OK*
2	*OK*	*OK*	*OK*	*OK*	*OK*
3	*OK*	*OK*	*OK*	*OK*	*OK*
4	*n/a*	*n/a*	*n/a*	*n/a*	*n/a*
5	*n/a*	*n/a*	*n/a*	*n/a*	*n/a*

NOTE:

ULTIMATE PULLOUT CAPACITY 33,000 POUNDS IN 3,000 PSI CONCRETE.

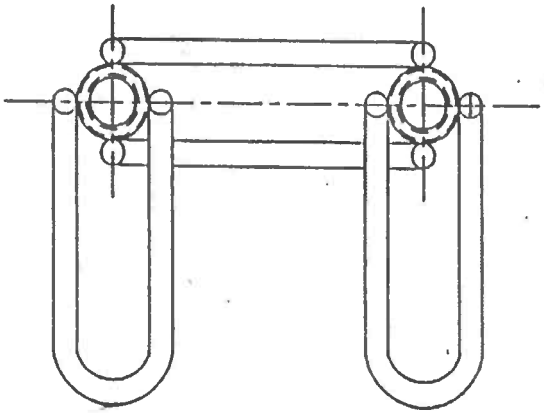

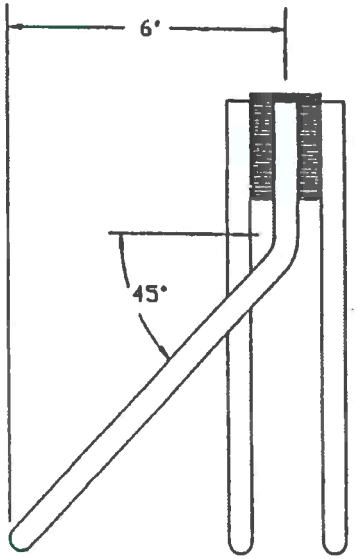

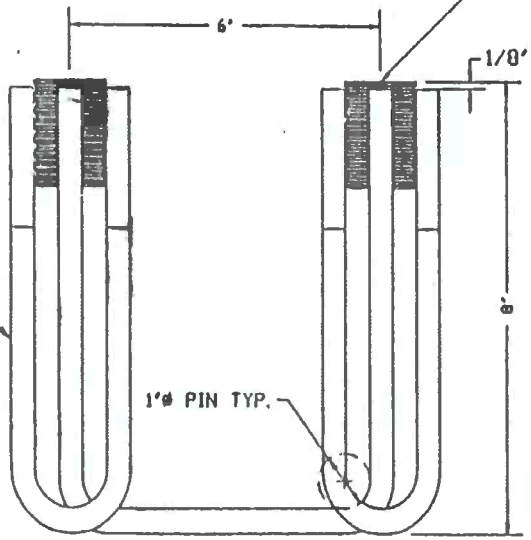

Scale NONE	Date	RICHMOND Screw Anchor Co. 7214 Burns Street Fort Worth, TX 76118
Drawn By VADIM	2/7/90	
Checked By		1"ø TWO BOLT WINGWALL PRESET ANCHOR
Stress Co		
Weight Co		
Approved		Product Symbol / Drawing No. D-694 / Rel. Date
Customer		

Section 4
CSI LRFD Wing wall 3
Calculations

Concrete Systems Inc.
9 Commercial St., Hudson, NH,03051
Phone 603-889-4163
Fax 603-889-2417

AASHTO LRFD WINGWALL CALCULATIONS

PROJECT NUMBER: C22283 WW 3
PROJECT NAME: PROPOSED BRIDGE: VT ROUTE 58 BRIDGE #6 IRASBURG, VT
DATE: Apr 3, 2015
BY: CV

INPUT PARAMETERS:

Wall geometry

Panel Height (high) = 14.33 ft
Panel Height (low) = 10.33 ft
Wall Panel Length = 13.00 ft
Entire Wall length = 13.00 ft
Length of flat = 1.00 ft
wall thickness = 12
Wingwall Drop *(high-low)* = 4.00 ft
Wall slope = 0.3333
Max fill ht. *(t/road to b/ww)* = 21.93 ft
Fill Slope *(perp. to road)* = 2.0
Wall angle *(perp. to road)* = 45
Fill slope *(perp. to wall)* = 2.83
Wingwall Panel Connected to Bridge Unit= ☑ Yes

Soil properties

γ_{soil} = 140 pcf
γ_{conc} = 150 pcf
$\gamma_{LLsurcharge}$ = 120 pcf
ϕ_{AB} = 32
θ_{AB} = 0
δ_{AB} = 24
ϕ_{BC} = 32
θ_{BC} = 30
δ_{BC} = 16

NONE

Foundation

D_{ftg} = 3.0 ft
B_{ftg} = 2.5 ft
o = 9 in
Q_{soil} = 3.0 KSF

Railing or barrier

T/WW to load = 2.00 ft
impact load = 10.00 K

	Distance to anchor	Overriding perp. slope @ anchor	Wall height @ anchor	Contrib. width	Perp. slope used @ anchor	h_{eq} LL surch	Anchor Type	Check 'e' & Bearing
Anchor #1	3.50 ft	n	11.50 ft	5.50 ft	2.83 ft	0.00 ft	F	OK
Anchor #2	7.50 ft	n	12.83 ft	3.75 ft	2.83 ft	0.00 ft	F	OK
Anchor #3	11.00 ft	n	14.00 ft	2.75 ft	2.83 ft	0.00 ft	F	OK
Anchor #4	0.00 ft	n	0.00 ft	0.00 ft	2.83 ft	0.00 ft	A	N/A
Anchor #5	0.00 ft	n	0.00 ft	0.00 ft	2.83 ft	0.00 ft	A	N/A

CALCULATION NOTES:

1. Wingwall calculations are done in accordance with the current edition of the *AASHTO LRFD Bridge Design Specifications* .
2. Moments are summed about the *toe (face) of the wingwall* (point "o" on attached "Pressure Diagram").
3. K_a is calculated using equation found in former AASHTO LRFD Specifications Equation 3.11.5.3-1

$K_a =$

4. Only 80% of the soil unit weight is used for the eccentricity/ stability calculation. This is a conservative assumption as explained in the full HITEC report "Evaluation of the CON/SPAN® Wingwall System"
5. The full 100% of the soil unit weight is used for the bearing calculations.
6. These calculations conservatively assume that the wall anchor has the same unit weight as soil.
7. The wingwall angle (in plan view) is measured from perpendicular to roadway.
8. Barrier loads are distributed per AASHTO LRFD Specifications Section 13

Anchor 1			
SOIL PROPERTY	**DESCRIPTION**	**VALUE section AB**	**VALUE section BC**
ϕ	friction angle of soil	32	32
θ	angle of wall to the y-axis	0	30
δ	wall-soil friction angle *(measured from a perpendicular with the wall)* =0, if significant vibrations of backfill or modules settling more than backfill. = 0.5*ϕ, if modules are uniform width. = 0.75*ϕ, if averaged pressure surface	24	16
x	side slopes from road (x:1)	2.0	
α	wingwall angle (angle w/ perpendicular to road)	45	
	slope of backfill (perpendicular to wall)	2.83	
β	angle of backfill (perpendicular to wall)	19.5	19.5
	$(K_a)_{AB}$ =	0.37	$(K_a)_{BC}$ = 0.13

Anchor 1

VARIABLE	DESCRIPTION OF VARIABLE	VALUE	
H	wingwall design height at anchor location (feet)	11.50	
h_{surch}	height of live load surcharge (feet)	0.00	
t	thickness of wingwall (inches)	12	
δ	wall friction angle for section AB	24	
β	angle of backfill (degrees)	19.5	
L	length of anchor (feet)	8.04	F
γ_s	unit weight of backfill (kcf)	140	
γ_c	unit weight of concrete (kcf)	150	
γ_{surch}	unit weight of surcharge (kcf)	120	*(per AASHTO LRFD 3.11.6.4)*

Description	Vertical Reaction (k/ft)	Horizontal Reaction (k/ft)	Lever Arm (ft)	Disturbing Moment (ft-k/ft)	"Stability" Resisting Moment (ft-k/ft)	"Bearing" Resisting Moment (ft-k/ft)
wall (W_w)	1.72		0.50		0.86	0.86
soil I_A	1.60		6.36		8.14	10.17
soil I_B	9.00		5.02		36.15	45.19
soil II_A	2.57		3.63		7.46	9.33
soil II_B	0.68		7.02		3.84	4.80
$W_{surcharge(vert)}$	0.00		5.02		0.00	0.00
$W_{parapet}$	0.00		0.50		0.00	0.00
Soil Pressure						
$(P_{AB})_v$	1.24		9.04		11.21	11.21
$(P_{AB})_h$		2.79	7.11	19.82		
$(P_{BC1})_v$	-0.23		7.89		-1.79	-1.79
$(P_{BC1})_h$		0.91	1.50	1.36		
$(P_{BC2})_v$	-0.04		7.50		-0.31	-0.31
$(P_{BC2})_h$		0.17	0.83	0.14		
$P_{surcharch(hor)}$		0.00	7.17	0.00		
TOTALS =	16.55	3.86		21.32	65.56	79.46

AASHTO LRFD C11.6.3.3 states: The specified criteria for the location of the resultant, coupled with investigation of the bearing pressure, replaces the investigation of the ratio of stabilizing moment to overturning moment. See Section III Soil Bearing Pressure.

Anchor 2			
SOIL PROPERTY	**DESCRIPTION**	**VALUE section AB**	**VALUE section BC**
ϕ	friction angle of soil	32	32
θ	angle of wall to the y-axis	0	30
δ	wall-soil friction angle *(measured from a perpendicular with the wall)* =0, if significant vibrations of backfill or mod settling more than backfill. = 0.5*ϕ, if modules are uniform width. = 0.75*ϕ, if averaged pressure surface	24	16
x	side slopes from road (x:1)	2.0	
α	wingwall angle (angle w/ perpendicular to road)	45	
	slope of backfill (perpendicular to wall)	2.83	
β	angle of backfill (perpendicular to wall)	19.5	19.5
	$(K_a)_{AB}$ =	0.37	$(K_a)_{BC}$ = 0.13

Anchor 2

VARIABLE	DESCRIPTION OF VARIABLE	VALUE	
H	wingwall design height at anchor location (feet)	12.83	
h_{surch}	height of live load surcharge (feet)	0.00	
t	thickness of wingwall (inches)	12	
δ	wall friction angle for section AB	24	
β	angle of backfill (degrees)	19.5	
L	length of anchor (feet)	8.04	F
γ_s	unit weight of backfill (kcf)	140	
γ_c	unit weight of concrete (kcf)	150	
γ_{surch}	unit weight of surcharge (kcf)	120	*(per AASHTO LRFD 3.11.6.4)*

Description	Vertical Reaction (k/ft)	Horizontal Reaction (k/ft)	Lever Arm (ft)	Disturbing Moment (ft-k/ft)	"Stability" Resisting Moment (ft-k/ft)	"Bearing" Resisting Moment (ft-k/ft)
wall (W_w)	1.92		0.50		0.96	0.96
soil I_A	1.60		6.36		8.14	10.17
soil I_B	10.50		5.02		42.18	52.72
soil II_A	2.57		3.63		7.46	9.33
soil II_B	0.68		7.02		3.84	4.80
$W_{surcharge}$	0.00		5.02		0.00	0.00
$W_{parapet}$	0.00		0.50		0.00	0.00
Soil Pressure						
$(P_{AB})_v$	1.56		9.04		14.14	14.14
$(P_{AB})_h$		3.51	7.56	26.56		
$(P_{BC1})_v$	-0.25		7.88		-2.00	-2.00
$(P_{BC1})_h$		1.02	1.50	1.53		
$(P_{BC2})_v$	-0.04		7.88		-0.33	-0.33
$(P_{BC2})_h$		0.17	0.83	0.14		
P_{surch}		0.00	7.84	0.00		
TOTALS =	18.55	4.70		28.23	74.39	89.79

AASHTO LRFD C11.6.3.3 states: The specified criteria for the location of the resultant, coupled with investigation of the bearing pressure, replaces the investigation of the ratio of stabilizing moment to overturning moment. See Section III Soil Bearing Pressure.

Anchor 3			
SOIL PROPERTY	**DESCRIPTION**	**VALUE section AB**	**VALUE section BC**
ϕ	friction angle of soil	32	32
θ	angle of wall to the y-axis	0	30
δ	wall-soil friction angle *(measured from a perpendicular with the wall)* =0, if significant vibrations of backfill or mod settling more than backfill. = 0.5*ϕ, if modules are uniform width. = 0.75*ϕ, if averaged pressure surface	24	16
x	side slopes from road (x:1)	2.0	
α	wingwall angle (angle w/ perpendicular to road)	45	
	slope of backfill (perpendicular to wall)	2.83	
β	angle of backfill (perpendicular to wall)	19.5	19.5
	$(K_a)_{AB}$ =	0.37	$(K_a)_{BC}$ = 0.13

Anchor 3

VARIABLE	DESCRIPTION OF VARIABLE	VALUE	
H	wingwall design height at anchor location (feet)	14.00	
h_{surch}	height of live load surcharge (feet)	0.00	
t	thickness of wingwall (inches)	12	
δ	wall friction angle for section AB	24	
β	angle of backfill (degrees)	19.5	
L	length of anchor (feet)	8.04	F
γ_s	unit weight of backfill (kcf)	140	
γ_c	unit weight of concrete (kcf)	150	
γ_{surch}	unit weight of surcharge (kcf)	120	*(per AASHTO LRFD 3.11.6.4)*

Description	Vertical Reaction (k/ft)	Horizontal Reaction (k/ft)	Lever Arm (ft)	Disturbing Moment (ft-k/ft)	"Stability" Resisting Moment (ft-k/ft)	"Bearing" Resisting Moment (ft-k/ft)
wall (W_w)	2.10		0.50		1.05	1.05
soil I_A	1.60		6.36		8.14	10.17
soil I_B	11.82		5.02		47.45	59.31
soil II_A	2.57		3.63		7.46	9.33
soil II_B	0.68		7.02		3.84	4.80
$W_{surcharge}$	0.00		5.02		0.00	0.00
$W_{parapet}$	0.00		0.50		0.00	0.00
Soil Pressure						
$(P_{AB})_v$	1.88		9.04		16.98	16.98
$(P_{AB})_h$		4.22	7.95	33.53		
$(P_{BC1})_v$	-0.28		7.88		-2.20	-2.20
$(P_{BC1})_h$		1.12	1.50	1.68		
$(P_{BC2})_v$	-0.04		7.88		-0.33	-0.33
$(P_{BC2})_h$		0.17	0.83	0.14		
P_{surch}		0.00	8.42	0.00		
TOTALS =	20.33	5.51		35.35	82.40	99.12

AASHTO LRFD C11.6.3.3 states: The specified criteria for the location of the resultant, coupled with investigation of the bearing pressure, replaces the investigation of the ratio of stabilizing moment to overturning moment. See Section III Soil Bearing Pressure.

II. CHECK OVERTURNING STABILITY AT CONNECTION PLATES

The connection plates provide stability for the portion of the wall not supported by the anchors, i.e., the section closest to the culvert. (See wingwall sketch)

Data:

number of plates = 2

ϕ = 32

δ = 24

γ_s = 0.140 kcf

$\gamma_{(surcharge)}$ = 0.120 kcf

wall height @ plates (H) = **14.33 ft**

Live load surcharge (h) = **0.00 ft**

section width for plates (S) = 1.0 ft

$y_{Psh} = H/3$ = 4.8 ft

$y_{PLL} = H/2$ = 7.2 ft

y_{p1} = **0.75 ft**

y_{p2} = **8.75 ft**

A_{bolt} = 0.79

t_{plate} = 1.00 in

$\phi F_{(bolt)}$ = 30 ksi

$F_{y(plate)}$ = 36 ksi

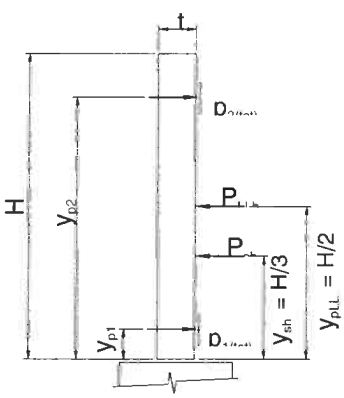

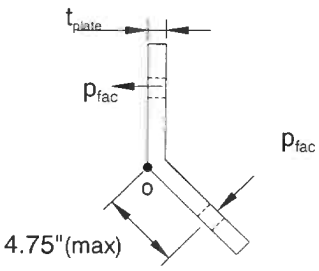

length of connection plate is 10"

Find soil pressure on section:

Because the wall is more rigid at the plates, at-rest soil pressure coefficient (K_o) is used.

$K_o = 1\text{-}\sin\phi = 0.47$ *(AASHTO LRFD eq. 3.11.5.2-1)*

$P_{sh} = (^1/_2)\gamma_s K_o H^2(S)(\cos\delta) = 6.17$ K

$P_{LLh} = K_o\gamma_s HhS(\cos\delta) = 0.00$ K

$P_{impact} = P_{imp}S/L_{distr} = 0$

Find reaction at plate:

Sum moments about bottom plate, p_1

$\Sigma M_{p1} = 0 = P_{sh}(y_{Psh} - y_{p1}) - p_2(y_{p2} - y_{p1})$ *(dead load)*

$\Sigma M_{p1} = 0 = P_{LL}(y_{PLL} - y_{p1}) - p_{2LL}(y_{p2} - y_{p1}) + P_{imp}(y_{imp} - y_{p1})$ *(live load)*

$p_2 = \dfrac{P_{sh}(y_{Psh} - y_{p1})}{(y_{p2} - y_{p1})} = 3.11$ K $\qquad p_1 = P_{sh} - p_2 = 3.07$ K

$p_{2LL} = \dfrac{P_{LLh}(y_{pLL} - y_{p1}) + P_{imp}(y_{imp} - y_{p1})}{(y_{p2} - y_{p1})} = 0.00$ K $\qquad p_{1LL} = P_{LL} + P_{imp} - p_{2LL} = 0.00$ K

Find factored reaction:

Load factors are per AASHTO LRFD 3.4.1-1 & Table 3.4.1-2

$p_{fac} = \gamma p_{max(DL)} + (1.75)p_{max(LL)}$

$p_{fac} = (1.35)p_{(DL)} + (1.75)p_{(LL)}$

$p_{1(tot,\ factored)} = 4.14$ K

$p_{2(tot,\ factored)} = 4.19$ K **Controls**

$p_{(max,\ factored)} = 4.19$ K

Check bolts:

The special Richmond Screw Anchor *"wingwall insert" pullout capacity was obtained from the manufacturer and has approx. 3:1 safety factor.*

Pullout capacity = 16.5 k/bolt **Controls**

Bolt tension = $\phi F A_{bolt}$ = 23.7 k/bolt

$F.S. = \dfrac{\text{Capacity* 2 bolts}}{(p_{fac})} = 7.87$ *> 1.0, OK*

Check bending of plate:

Sum moments about corner of plate, point "o"

$\Sigma M_o = (p_{fac})(4.75") = 19924$ lb-in

$I_{pl} = bh^3/12 = 0.83$ in^4

$\sigma_{max} = \dfrac{My}{I_{pl}} = 12$ ksi $< \phi F_y = 0.9F_y$ *OK*

(AISC LRFD-F2 states $\phi_b = 0.9$)

III. CHECK SOIL BEARING PRESSURE AND SLIDING UNDER FOOTING

The reaction will be supported on the horizontal portion of the anchor plus the footing.

R_v = Total vertical reaction at anchor (using 100% of soil weight).
R_h = Total horizontal reaction at anchor.
M_D = Disturbing moment at anchor.
M_{Rb} = Resisting moment due to 100% of soil at anchor.

Summary of loads at anchors

anchor	anchor base length	R_v ($^K/_F$)	R_h ($^K/_F$)	M_D ($^{K\text{-}F}/_F$)	M_{Rb} ($^{K\text{-}F}/_F$)
1	5.73	16.55	3.86	21.32	79.46
2	5.73	18.55	4.70	28.23	89.79
3	5.73	20.33	5.51	35.35	99.12
4	1.73	0.00	0.00	0.00	0.00
5	1.73	0.00	0.00	0.00	0.00

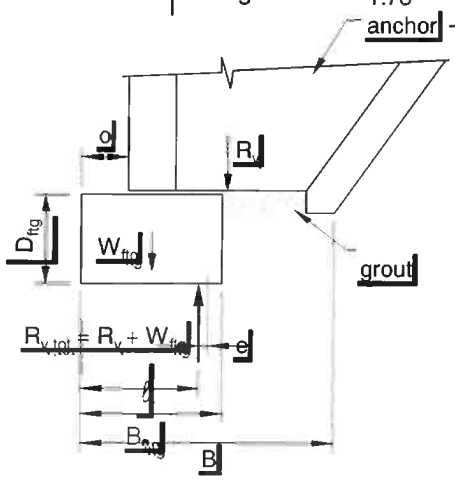

Check the bearing pressure under the wall

D_{ftg} = 3.0 ft
B_{ftg} = 2.5 ft
o = 9 in
W_{ftg} = 1.13 klf

Q_{allow} = 3.0 KSF

$R_{v,tot}$ = total vertical reaction ($R_v + W_{ftg}$)
B = bearing width
= maximum of (anchor base length + o) or B_{ftg}
ℓ = location of vertical resultant ($R_{v,tot}$) along bearing width

$$= \frac{R_v((M_{Rb}-M_D)/R_v + o) + W_{ftg}(B/2)}{R_{v,tot}}$$

e = eccentricity of resultant
= B/2 - ℓ
B' = adjusted bearing width
= B - 2e
q = bearing pressure *(must be less than Q_{allow})*
= $R_{v,tot}$ / B'

Check bearing pressure at each anchor

anchor	B (ft)	ℓ (ft)	e	check e	B' (ft)	q	check q
1	7.48	4.07	-0.33	*OK*	6.82	2.59	*OK*
2	7.48	3.91	-0.17	*OK*	7.15	2.75	*OK*
3	7.48	3.75	-0.01	*OK*	7.46	2.87	*OK*
4	0.00	0.00	0.00	*n/a*	0.00	0.00	*n/a*
5	0.00	0.00	0.00	*n/a*	0.00	0.00	*n/a*

Check the sliding factor of safety

$R_R = \phi * R_{V,tot} * .8 * \tan \phi$ *(AASHTO LRFD 10.6.3.4)*

(must be >R_h)

ϕ = 0.9 *from AASHTO LRFD Table 10.5.5.2.2-1 for precast concrete on sand*

Check sliding at each anchor

anchor	$R_{v,tot}$ (k/f)	R_R (k/f)	R_h	check $R_R > R_h$
1	17.68	7.96	3.86	*OK*
2	19.68	8.85	4.70	*OK*
3	21.45	9.65	5.51	*OK*
4	0.00	0.00	0.01	*n/a*
5	0.00	0.00	0.01	*n/a*

IV. CHECK BENDING OF FOOTING CROSS SECTION

Bending need not be considered in footings when the footing depth, D, exceeds the projection, pr, of the footing beyond the edge of the wall.

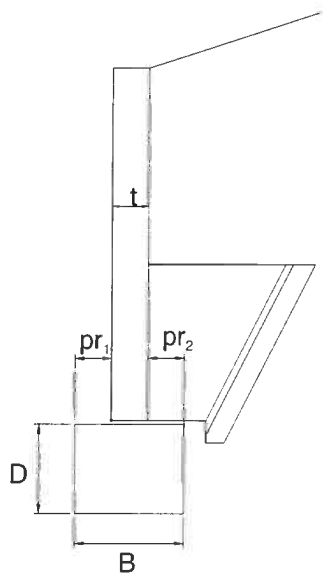

pr_1 = offset(o) = 9 in

pr_2 = B - o - t = 9 in **Controls**

pr_{max} = 9 in

projection < D *OK*

Use minimal steel stirrups
#4 @ 48 inches o.c.

V. CHECK WALL SECTION - BENDING AND SHEAR (vertical bars)

Assumptions: *1. Wall stem is cantilevered from anchor.*
2. Use active earth pressure because wall can deflect at top.
3. Use K_a and δ from Anchor Stability Calculations.

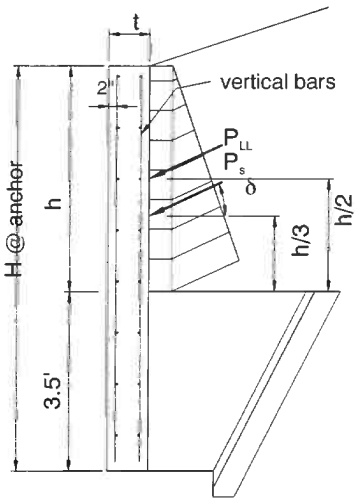

Horizontal loads:

$P_{sh} = (^1/_2)\gamma_s K_a h^2(\cos\delta)$

$P_{LLh} = \gamma_s K_a h(h_{surcharge})(\cos\delta)$

$P_{impact} = P_{imp}/L_{distr}$

Factored forces:

Load factors are per AASHTO LRFD 3.4.1-1 & Table 3.4.1-2

M_u = Section width$[(1.35)P_{sh}(h/3) + (1.75)P_{LLh}(h/2) + (1.75)P_{imp}(h+y_{imp})]$

V_u = Section width$[(1.35)P_{sh} + (1.75P_{LLh} + (1.75P_{imp}]$

Summary of forces at anchors

anchor	H (ft)	h (ft)	$h_{surcharge}$ (ft)	P_{sh} (k/ft)	P_{LLh} (k/ft)	P_{imp} (k/ft)	M_u (k-ft)	V_u (k)
1	11.50	8.00	0.00	1.52	0.00	0.00	30.02	11.26
2	12.83	9.33	0.00	2.06	0.00	0.00	32.50	10.45
3	14.00	10.50	0.00	2.61	0.00	0.00	33.94	9.70
4	0.00	0.00	0.00	0.00	0.00	0.00	0.00	0.00
5	0.00	0.00	0.00	0.00	0.00	0.00	0.00	0.00

Check bending (reinforcment) at anchors

f'_c = 5000 psi

f_y = 60000 psi

ϕ_b = 0.9 *(AASHTO LRFD 5.4.2.1)*

$m = f_y/0.85f'_c$ = 14.12

d = 9.50 in

b = anchor's contrib. width

$$R_u = \frac{M_u}{\phi_b b d^2}$$

$$\rho_{reqd} = \frac{1}{m}\left(1-\sqrt{1-\frac{2mR_u}{f_y}}\right)$$

ρ_{min} = *AASHTO LRFD 5.7.3.3.2 states the minimum reinforcement is the lesser of 1.2Mcr OR 1.33 times the factored moment required by strength.*

anchor	R_u (psi)	ρ_{reqd}	ρ_{cr}	ρ_{min}	$A_{s\ min}$ (in^2)	$A_{s\ actual}$ (in^2)	check
1	67	0.0011	0.0032	0.0015	0.92	7.00	OK
2	107	0.0018	0.0032	0.0023	1.00	6.77	OK
3	152	0.0026	0.0032	0.0032	1.01	6.64	OK
4	0	0.0000	0.0032	0.0000	0.00	#VALUE!	N/A
5	0	0.0000	0.0032	0.0000	0.00	#VALUE!	N/A

Check shear

$V_c = (.0316)*\beta \sqrt{f'_c}\, b_v d_v$ *(V_c calculated by AASHTO LRFD eq'n 5.8.3.3-3)*

$\phi = 0.9$ *(AASHTO LRFD 5.5.4.2.1)*

$\beta = 2$ *(AASHTO LRFD 5.8.3.4.1)*

$d_v = .9*d$ or $.72*h$ *whichever is greater (AASHTO LRFD 5.8.2.9)*

anchor	ϕV_c	check $V_u < \phi V_c$
1	72.53	OK
2	49.45	OK
3	36.26	OK
4	0.00	N/A
5	0.00	N/A

VI. CHECK TYPE 'F' ANCHOR ATTACHMENT

Check capacity of connector for pullout (truncated pyramid failure), shear, tension, and combined shear & tension

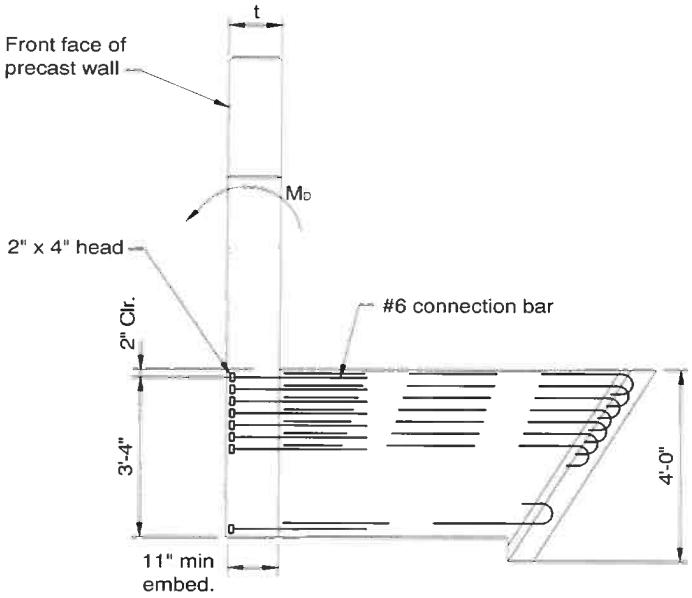

embedment depth (l_e) = **11 in**

Attachment depth = 42 in

X head dimension (Xd_{head}) = 3 in

Y head dimension (Yd_{head}) = 3 in

Bar size = **# 6**

rows = **7**

row spacing = **3 in**

wall thickness (t) = 12 in

$x = Xd_{head}$ *(since only 1 column)* = 3 in

$y = (\#rows-1)(row\ spacing) + Yd_{head}$ = 21 in

z = min(x,y) = 3 in

$h_{min} = (l + l_e)/2$ = 12.5 in

$A_R = (x+2l_e-2t)(y+2l_e-2t)$ = 19.0 in^2

f'_c = **4000 psi**

f_y = **60000 psi**

$\phi_{concrete}$ = 0.85

ϕ_{steel} = 0.90

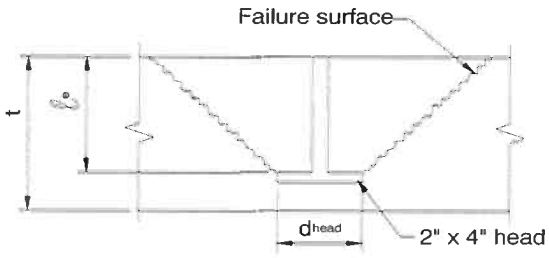

TENSION CAPACITY (Per PCI Design Handbook §6.5.2.1)

t < hmin: failure surface penetrates slab

Find pullout capacity of concrete

if $t >= h_{min}$, $\phi P_c = \phi 2.67 sqrt(f'c)(x+2l_e)(y+2l_e)$

if $t < h_{min}$, $\phi P_c = \phi 2.67 sqrt(f'c)[(x+2l_e)(y+2l_e) - A_R]$

ϕP_c = 151.57 K

Find tension capacity of studs

$\phi P_y = \phi f_y(A_{bar})(\#bars)$

ϕP_y = 167.00 K

controlling tension capacity (ϕP) = 151.57 K

Find moment capacity of anchor

Moment capacity of anchor (ϕM_n) = $\phi P(d-a/2)$

d = attachment depth - bar cover - $(y-Yd_{head})/2$ = 31 in

$a = A_s f_y/0.85 f'_c b$ = 9.10 in

ϕM_n = 334.12 k-f

SHEAR CAPACITY (Per PCI Design Handbook §6.5.2.2)

Find shear capacity of concrete

$\phi V_c = \phi V'_c C_w C_t C_c$

$\phi V'_c = \phi 12.5 d_e^{1.5} \text{sqrt}(f'_c)$	= 167.6 K
$C_w = 1 + \text{spacing}/3.5d_e < \#\text{columns}$	= 1.0
$C_t = t/1.3d_e <= 1.0$	= 0.23
$C_c = 0.4 + 0.7d_c/de <= 1.0$	= 1.0
d_e = attachment depth - cover - bar dia/2	= 40 in
d_c = distance to side of wingwall	= 42 in

$\phi V_c = \phi V'_c C_w C_t C_c =$ 39.05 K

Find shear capacity of studs

$\phi V_y = \phi 0.9 f_y A_{bar}(\#\text{bars})$

$\phi V_y =$ 150.30 K

controlling shear capacity (ϕV) = 39.05 K

FIND LOADS

Unfactored loads on anchors:

$M_{D(DL)}$ = (sec width)$M_{D(anchor)}$

$M_{D(LL)}$ = (sec width)($M_{D(anchor)}$ + P_{imp}*(wall ht + y_{imp}))

Factored loads:

Load factors are per AASHTO 3.22.1 & Table 3.22.1A

$M_u = (1.3)(1.3)M_{D(DL)} + (1.3)(1.67)M_{D(LL)}$

$P_u = M_u$ /(d-a/2)*cos(bar angle)

$V_u = M_u$ /(d-a/2)*sin(bar angle)

bar angle = 0°

Summary of forces

anchor	$M_{D(DL)}$ ft-k	$M_{D(LL)}$ ft-k	M_u ft-k	P_u k	V_u k
1	117.3	0.0	198.2	89.9	0.0
2	105.9	0.0	178.9	81.2	0.0
3	97.2	0.0	164.3	74.5	0.0
4	0.0	0.0	0.0	0.0	0.0
5	0.0	0.0	0.0	0.0	0.0

Summary of results

anchor	check $\phi M_n > M_u$	check $\phi P > P_u$	check $\phi V > V_u$	check combined V_c & P_c	check combined V_s & P_s
1	*OK*	*OK*	*OK*	*OK*	*OK*
2	*OK*	*OK*	*OK*	*OK*	*OK*
3	*OK*	*OK*	*OK*	*OK*	*OK*
4	*n/a*	*n/a*	*n/a*	*n/a*	*n/a*
5	*n/a*	*n/a*	*n/a*	*n/a*	*n/a*

Section 5
CSI LRFD Wing wall 4
Calculations

Concrete Systems Inc.
9 Commercial St., Hudson, NH,03051
Phone 603-889-4163
Fax 603-889-2417

AASHTO LRFD WINGWALL CALCULATIONS

PROJECT NUMBER: C22283 WW 4
PROJECT NAME: PROPOSED BRIDGE: VT ROUTE 58 BRIDGE #6 IRASBURG, VT
DATE: Apr 3, 2015
BY: CV

INPUT PARAMETERS:

Wall geometry

Panel Height (high) = 14.33 ft
Panel Height (low) = 10.33 ft
Wall Panel Length = 12.00 ft
Entire Wall length = 12.00 ft
Length of flat = 1.00 ft
wall thickness = 12
Wingwall Drop *(high-low)* = 4.00 ft
Wall slope = 0.3636
Max fill ht. *(t/road to b/ww)* = 21.93 ft
Fill Slope *(perp. to road)* = 2.0
Wall angle *(perp. to road)* = 45
Fill slope *(perp. to wall)* = 2.83
Wingwall Panel Connected to Bridge Unit= ☑ Yes

Soil properties

γ_{soil} = 140 pcf
γ_{conc} = 150 pcf
$\gamma_{LLsurcharge}$ = 120 pcf
ϕ_{AB} = 32
θ_{AB} = 0
δ_{AB} = 24
ϕ_{BC} = 32
θ_{BC} = 30
δ_{BC} = 16

NONE

Foundation

D_{ftg} = 3.0 ft
B_{ftg} = 2.5 ft
o = 9 in
Q_{soil} = 3.0 KSF

Railing or barrier

T/WW to load = 2.00 ft
impact load = 10.00 K

	Distance to anchor	Overriding perp. slope @ anchor	Wall height @ anchor	Contrib. width	Perp. slope used @ anchor	h_{eq} LL surch	Anchor Type	Check 'e' & Bearing
Anchor #1	3.00 ft	n	11.42 ft	4.88 ft	2.83 ft	0.00 ft	F	OK
Anchor #2	6.75 ft	n	12.78 ft	3.25 ft	2.83 ft	0.00 ft	F	OK
Anchor #3	9.50 ft	n	13.78 ft	2.63 ft	2.83 ft	0.00 ft	F	OK
Anchor #4	0.00 ft	n	0.00 ft	0.00 ft	2.83 ft	0.00 ft	A	N/A
Anchor #5	0.00 ft	n	0.00 ft	0.00 ft	2.83 ft	0.00 ft	A	N/A

CALCULATION NOTES:

1. Wingwall calculations are done in accordance with the current edition of the *AASHTO LRFD Bridge Design Specifications* .
2. Moments are summed about the *toe (face) of the wingwall* (point "o" on attached "Pressure Diagram").
3. K_a is calculated using equation found in former AASHTO LRFD Specifications Equation 3.11.5.3-1

$K_a =$

4. Only 80% of the soil unit weight is used for the eccentricity/ stability calculation. This is a conservative assumption as explained in the full HITEC report "Evaluation of the CON/SPAN® Wingwall System"
5. The full 100% of the soil unit weight is used for the bearing calculations.
6. These calculations conservatively assume that the wall anchor has the same unit weight as soil.
7. The wingwall angle (in plan view) is measured from perpendicular to roadway.
8. Barrier loads are distributed per AASHTO LRFD Specifications Section 13

Anchor 1			
SOIL PROPERTY	**DESCRIPTION**	**VALUE section AB**	**VALUE section BC**
ϕ	friction angle of soil	32	32
θ	angle of wall to the y-axis	0	30
δ	wall-soil friction angle *(measured from a perpendicular with the wall)* =0, if significant vibrations of backfill or modules settling more than backfill. = 0.5*ϕ, if modules are uniform width. = 0.75*ϕ, if averaged pressure surface	24	16
x	side slopes from road (x:1)	2.0	
α	wingwall angle (angle w/ perpendicular to road)	45	
	slope of backfill (perpendicular to wall)	2.83	
β	angle of backfill (perpendicular to wall)	19.5	19.5
	$(K_a)_{AB}$ =	0.37	$(K_a)_{BC}$ = 0.13

Anchor 1

VARIABLE	DESCRIPTION OF VARIABLE	VALUE	
H	wingwall design height at anchor location (feet)	11.42	
h_{surch}	height of live load surcharge (feet)	0.00	
t	thickness of wingwall (inches)	12	
δ	wall friction angle for section AB	24	
β	angle of backfill (degrees)	19.5	
L	length of anchor (feet)	8.04	F
γ_s	unit weight of backfill (kcf)	140	
γ_c	unit weight of concrete (kcf)	150	
γ_{surch}	unit weight of surcharge (kcf)	120	*(per AASHTO LRFD 3.11.6.4)*

Description	Vertical Reaction (k/ft)	Horizontal Reaction (k/ft)	Lever Arm (ft)	Disturbing Moment (ft-k/ft)	"Stability" Resisting Moment (ft-k/ft)	"Bearing" Resisting Moment (ft-k/ft)
wall (W_w)	1.71		0.50		0.86	0.86
soil I_A	1.60		6.36		8.14	10.17
soil I_B	8.92		5.02		35.81	44.76
soil II_A	2.57		3.63		7.46	9.33
soil II_B	0.68		7.02		3.84	4.80
$W_{surcharge(vert)}$	0.00		5.02		0.00	0.00
$W_{parapet}$	0.00		0.50		0.00	0.00
Soil Pressure						
$(P_{AB})_v$	1.22		9.04		11.06	11.06
$(P_{AB})_h$		2.75	7.09	19.47		
$(P_{BC1})_v$	-0.22		7.89		-1.77	-1.77
$(P_{BC1})_h$		0.90	1.50	1.35		
$(P_{BC2})_v$	-0.04		7.50		-0.31	-0.31
$(P_{BC2})_h$		0.17	0.83	0.14		
$P_{surcharch(hor)}$		0.00	7.13	0.00		
TOTALS =	16.44	3.82		20.97	65.07	78.88

AASHTO LRFD C11.6.3.3 states: The specified criteria for the location of the resultant, coupled with investigation of the bearing pressure, replaces the investigation of the ratio of stabilizing moment to overturning moment. See Section III Soil Bearing Pressure.

Anchor 2			
SOIL PROPERTY	**DESCRIPTION**	**VALUE section AB**	**VALUE section BC**
ϕ	friction angle of soil	32	32
θ	angle of wall to the y-axis	0	30
δ	wall-soil friction angle *(measured from a perpendicular with the wall)* =0, if significant vibrations of backfill or moc settling more than backfill. = 0.5*ϕ, if modules are uniform width. = 0.75*ϕ, if averaged pressure surface	24	16
x	side slopes from road (x:1)	2.0	
α	wingwall angle (angle w/ perpendicular to road)	45	
	slope of backfill (perpendicular to wall)	2.83	
β	angle of backfill (perpendicular to wall)	19.5	19.5
	$(K_a)_{AB}$ =	0.37	$(K_a)_{BC}$ = 0.13

Anchor 2

VARIABLE	DESCRIPTION OF VARIABLE	VALUE	
H	wingwall design height at anchor location (feet)	12.78	
h_{surch}	height of live load surcharge (feet)	0.00	
t	thickness of wingwall (inches)	12	
δ	wall friction angle for section AB	24	
β	angle of backfill (degrees)	19.5	
L	length of anchor (feet)	8.04	F
γ_s	unit weight of backfill (kcf)	140	
γ_c	unit weight of concrete (kcf)	150	
γ_{surch}	unit weight of surcharge (kcf)	120	*(per AASHTO LRFD 3.11.6.4)*

Description	Vertical Reaction (k/ft)	Horizontal Reaction (k/ft)	Lever Arm (ft)	Disturbing Moment (ft-k/ft)	"Stability" Resisting Moment (ft-k/ft)	"Bearing" Resisting Moment (ft-k/ft)
wall (W_w)	1.92		0.50		0.96	0.96
soil I_A	1.60		6.36		8.14	10.17
soil I_B	10.45		5.02		41.97	52.46
soil II_A	2.57		3.63		7.46	9.33
soil II_B	0.68		7.02		3.84	4.80
$W_{surcharge}$	0.00		5.02		0.00	0.00
$W_{parapet}$	0.00		0.50		0.00	0.00
Soil Pressure						
$(P_{AB})_v$	1.55		9.04		14.04	14.04
$(P_{AB})_h$		3.49	7.54	26.31		
$(P_{BC1})_v$	-0.25		7.88		-2.00	-2.00
$(P_{BC1})_h$		1.02	1.50	1.52		
$(P_{BC2})_v$	-0.04		7.88		-0.33	-0.33
$(P_{BC2})_h$		0.17	0.83	0.14		
P_{surch}		0.00	7.81	0.00		
TOTALS =	18.48	4.67		27.97	74.08	89.43

AASHTO LRFD C11.6.3.3 states: The specified criteria for the location of the resultant, coupled with investigation of the bearing pressure, replaces the investigation of the ratio of stabilizing moment to overturning moment. See Section III Soil Bearing Pressure.

Anchor 3			
SOIL PROPERTY	**DESCRIPTION**	**VALUE section AB**	**VALUE section BC**
ϕ	friction angle of soil	32	32
θ	angle of wall to the y-axis	0	30
δ	wall-soil friction angle *(measured from a perpendicular with the wall)* =0, if significant vibrations of backfill or mod settling more than backfill. = 0.5*ϕ, if modules are uniform width. = 0.75*ϕ, if averaged pressure surface	24	16
x	side slopes from road (x:1)	2.0	
α	wingwall angle (angle w/ perpendicular to road)	45	
	slope of backfill (perpendicular to wall)	2.83	
β	angle of backfill (perpendicular to wall)	19.5	19.5
	$(K_a)_{AB}$ =	0.37	$(K_a)_{BC}$ = 0.13

Anchor 3

VARIABLE	DESCRIPTION OF VARIABLE	VALUE	
H	wingwall design height at anchor location (feet)	13.78	
h_{surch}	height of live load surcharge (feet)	0.00	
t	thickness of wingwall (inches)	12	
δ	wall friction angle for section AB	24	
β	angle of backfill (degrees)	19.5	
L	length of anchor (feet)	8.04	F
γ_s	unit weight of backfill (kcf)	140	
γ_c	unit weight of concrete (kcf)	150	
γ_{surch}	unit weight of surcharge (kcf)	120	*(per AASHTO LRFD 3.11.6.4)*

Description	Vertical Reaction (k/ft)	Horizontal Reaction (k/ft)	Lever Arm (ft)	Disturbing Moment (ft-k/ft)	"Stability" Resisting Moment (ft-k/ft)	"Bearing" Resisting Moment (ft-k/ft)
wall (W_w)	2.07		0.50		1.03	1.03
soil I_A	1.60		6.36		8.14	10.17
soil I_B	11.58		5.02		46.49	58.11
soil II_A	2.57		3.63		7.46	9.33
soil II_B	0.68		7.02		3.84	4.80
$W_{surcharge}$	0.00		5.02		0.00	0.00
$W_{parapet}$	0.00		0.50		0.00	0.00
Soil Pressure						
$(P_{AB})_v$	1.82		9.04		16.45	16.45
$(P_{AB})_h$		4.09	7.88	32.19		
$(P_{BC1})_v$	-0.27		7.88		-2.16	-2.16
$(P_{BC1})_h$		1.10	1.50	1.65		
$(P_{BC2})_v$	-0.04		7.88		-0.33	-0.33
$(P_{BC2})_h$		0.17	0.83	0.14		
P_{surch}		0.00	8.31	0.00		
TOTALS =	20.00	5.35		33.98	80.92	97.40

AASHTO LRFD C11.6.3.3 states: The specified criteria for the location of the resultant, coupled with investigation of the bearing pressure, replaces the investigation of the ratio of stabilizing moment to overturning moment. See Section III Soil Bearing Pressure.

II. CHECK OVERTURNING STABILITY AT CONNECTION PLATES

The connection plates provide stability for the portion of the wall not supported by the anchors, i.e., the section closest to the culvert. (See wingwall sketch)

Data:

number of plates = 2

ϕ = 32

δ = 24

γ_s = 0.140 kcf

$\gamma_{(surcharge)}$ = 0.120 kcf

wall height @ plates (H) = **14.33 ft**

Live load surcharge (h) = **0.00 ft**

section width for plates (S) = 1.3 ft

y_{Psh} = H/3 = 4.8 ft

y_{PLL} = H/2 = 7.2 ft

y_{p1} = **0.75 ft**

y_{p2} = **8.75 ft**

A_{bolt} = 0.79

t_{plate} = 1.00 in

$\phi F_{(bolt)}$ = 30 ksi

$F_{y(plate)}$ = 36 ksi

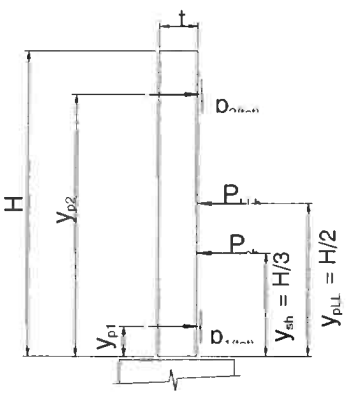

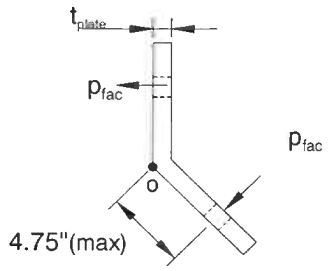

length of connection plate is 10"

Find soil pressure on section:

Because the wall is more rigid at the plates, at-rest soil pressure coefficient (K_o) is used.

K_o = 1-sin ϕ = 0.47 *(AASHTO LRFD eq. 3.11.5.2-1)*

$P_{sh} = (^1/_2)\gamma_s K_o H^2(S)(\cos\delta)$ = 7.72 K

$P_{LLh} = K_o\gamma_s HhS(\cos\delta)$ = 0.00 K

$P_{impact} = P_{imp}S/L_{distr}$ = 0

Find reaction at plate:

Sum moments about bottom plate, p_1

$\Sigma M_{p1} = 0 = P_{sh}(y_{Psh} - y_{p1}) - p_2(y_{p2} - y_{p1})$ *(dead load)*

$\Sigma M_{p1} = 0 = P_{LL}(y_{PLL} - y_{p1}) - p_{2LL}(y_{p2} - y_{p1}) + P_{imp}(y_{imp} - y_{p1})$ *(live load)*

$p_2 = \dfrac{P_{sh}(y_{Psh} - y_{p1})}{(y_{p2} - y_{p1})}$ = 3.88 K $\qquad p_1 = P_{sh} - p_2$ = 3.83 K

$p_{2LL} = \dfrac{P_{LLh}(y_{pLL} - y_{p1}) + P_{imp}(y_{imp} - y_{p1})}{(y_{p2} - y_{p1})}$ = 0.00 K $\qquad p_{1LL} = P_{LL} + P_{imp} - p_{2LL}$ = 0.00 K

Find factored reaction:

Load factors are per AASHTO LRFD 3.4.1-1 & Table 3.4.1-2

$p_{fac} = \gamma p_{max(DL)} + (1.75)p_{max(LL)}$

$p_{fac} = (1.35)p_{(DL)} + (1.75)p_{(LL)}$

$p_{1(tot,\ factored)}$ = 5.17 K

$p_{2(tot,\ factored)}$ = 5.24 K ***Controls***

$p_{(max,\ factored)}$ = 5.24 K

Check bolts:

The special Richmond Screw Anchor *"wingwall insert" pullout capacity was obtained from the manufacturer and has approx. 3:1 safety factor.*

Pullout capacity = 16.5 k/bolt ***Controls***

Bolt tension = $\phi F A_{bolt}$ = 23.7 k/bolt

$F.S. = \dfrac{\text{Capacity* 2 bolts}}{(p_{fac})}$ = 6.29 *> 1.0, OK*

Check bending of plate:

Sum moments about corner of plate, point "o"

$\Sigma M_o = (p_{fac})(4.75")$ = 24905 lb-in

$I_{pl} = bh^3/12$ = 0.83 in^4

$\sigma_{max} = \dfrac{My}{I_{pl}}$ = 15 ksi $< \phi F_y = 0.9F_y$ *OK*

(AISC LRFD-F2 states ϕ_b = 0.9)

III. CHECK SOIL BEARING PRESSURE AND SLIDING UNDER FOOTING

The reaction will be supported on the horizontal portion of the anchor plus the footing.

R_v = Total vertical reaction at anchor (using 100% of soil weight).

R_h = Total horizontal reaction at anchor.

M_D = Disturbing moment at anchor.

M_{Rb} = Resisting moment due to 100% of soil at anchor.

Summary of loads at anchors

anchor	anchor base length	R_v ($^K/_F$)	R_h ($^K/_F$)	M_D ($^{K\text{-}F}/_F$)	M_{Rb} ($^{K\text{-}F}/_F$)
1	5.73	16.44	3.82	20.97	78.88
2	5.73	18.48	4.67	27.97	89.43
3	5.73	20.00	5.35	33.98	97.40
4	1.73	0.00	0.00	0.00	0.00
5	1.73	0.00	0.00	0.00	0.00

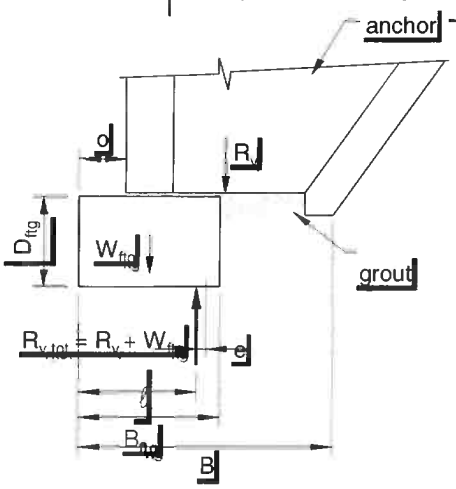

Check the bearing pressure under the wall

D_{ftg} = 3.0 ft

B_{ftg} = 2.5 ft

o = 9 in

W_{ftg} = 1.13 klf

Q_{allow} = 3.0 KSF

$R_{v,tot}$ = total vertical reaction ($R_v + W_{ftg}$)

B = bearing width

= maximum of (anchor base length + o) or B_{ftg}

ℓ = location of vertical resultant ($R_{v,tot}$) along bearing width

$$= \frac{R_v((M_{Rb}-M_D)/R_v + o) + W_{ftg}(B/2)}{R_{v,tot}}$$

e = eccentricity of resultant

= B/2 - ℓ

B' = adjusted bearing width

= B - 2e

q = bearing pressure *(must be less than Q_{allow})*

= $R_{v,tot}$ / B'

Check bearing pressure at each anchor

anchor	B (ft)	ℓ (ft)	e	check e	B' (ft)	q	check q
1	7.48	4.08	-0.34	*OK*	6.80	2.58	*OK*
2	7.48	3.91	-0.17	*OK*	7.13	2.75	*OK*
3	7.48	3.78	-0.04	*OK*	7.40	2.85	*OK*
4	0.00	0.00	0.00	*n/a*	0.00	0.00	*n/a*
5	0.00	0.00	0.00	*n/a*	0.00	0.00	*n/a*

Check the sliding factor of safety

$R_R = \phi * R_{V,tot} * .8 * \tan \phi$ *(AASHTO LRFD 10.6.3.4)*

(must be >R_h)

ϕ = 0.9 *from AASHTO LRFD Table 10.5.5.2.2-1 for precast concrete on sand*

Check sliding at each anchor

anchor	$R_{v,tot}$ (k/f)	R_R (k/f)	R_h	check $R_R > R_h$
1	17.57	7.90	3.82	*OK*
2	19.61	8.82	4.67	*OK*
3	21.13	9.51	5.35	*OK*
4	0.00	0.00	0.01	*n/a*
5	0.00	0.00	0.01	*n/a*

IV. CHECK BENDING OF FOOTING CROSS SECTION

Bending need not be considered in footings when the footing depth, D, exceeds the projection, pr, of the footing beyond the edge of the wall.

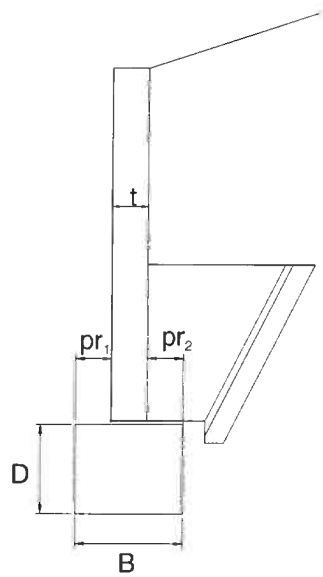

pr_1 = offset(o) = 9 in

pr_2 = B - o - t = 9 in **Controls**

pr_{max} = 9 in

projection < D *OK*

Use minimal steel stirrups
#4 @ 48 inches o.c.

V. CHECK WALL SECTION - BENDING AND SHEAR (vertical bars)

Assumptions: 1. *Wall stem is cantilevered from anchor.*
2. *Use active earth pressure because wall can deflect at top.*
3. *Use K_a and δ from Anchor Stability Calculations.*

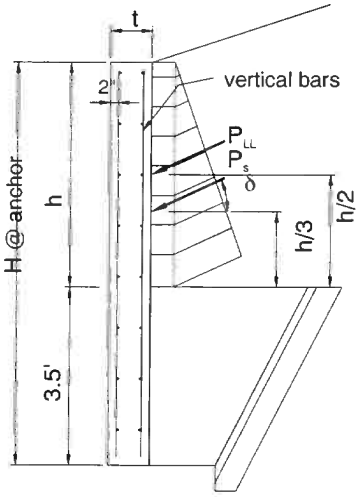

Horizontal loads:

$P_{sh} = (^1/_2)\gamma_s K_a h^2(\cos\delta)$

$P_{LLh} = \gamma_s K_a h(h_{surcharge})(\cos\delta)$

$P_{impact} = P_{imp}/L_{distr}$

Factored forces:

Load factors are per AASHTO LRFD 3.4.1-1 & Table 3.4.1-2

M_u = Section width$[(1.35)P_{sh}(h/3) + (1.75)P_{LLh}(h/2) + (1.75)P_{imp}(h+y_{imp})]$

V_u = Section width$[(1.35)P_{sh} + (1.75P_{LLh} + (1.75P_{imp}]$

Summary of forces at anchors

anchor	H (ft)	h (ft)	$h_{surcharge}$ (ft)	P_{sh} (k/ft)	P_{LLh} (k/ft)	P_{imp} (k/ft)	M_u (k-ft)	V_u (k)
1	11.42	7.92	0.00	1.49	0.00	0.00	25.86	9.79
2	12.78	9.28	0.00	2.04	0.00	0.00	27.76	8.97
3	13.78	10.28	0.00	2.51	0.00	0.00	30.48	8.89
4	0.00	0.00	0.00	0.00	0.00	0.00	0.00	0.00
5	0.00	0.00	0.00	0.00	0.00	0.00	0.00	0.00

Check bending (reinforcment) at anchors

f'_c = 5000 psi

f_y = 60000 psi

ϕ_b = 0.9 *(AASHTO LRFD 5.4.2.1)*

$m = f_y/0.85f'_c$ = 14.12

d = 9.50 in

b = anchor's contrib. width

$$R_u = \frac{M_u}{\phi_b b d^2}$$

$$\rho_{reqd} = \frac{1}{m}\left(1 - \sqrt{1 - \frac{2mR_u}{f_y}}\right)$$

ρ_{min} = *AASHTO LRFD 5.7.3.3.2 states the minimum reinforcement is the lesser of 1.2Mcr OR 1.33 times the factored moment required by strength.*

anchor	R_u (psi)	ρ_{reqd}	ρ_{cr}	ρ_{min}	$A_{s\ min}$ (in^2)	$A_{s\ actual}$ (in^2)	check
1	65	0.0011	0.0032	0.0014	0.79	6.92	OK
2	105	0.0018	0.0032	0.0023	0.85	6.71	OK
3	143	0.0024	0.0032	0.0032	0.94	6.62	OK
4	0	0.0000	0.0032	0.0000	0.00	#VALUE!	N/A
5	0	0.0000	0.0032	0.0000	0.00	#VALUE!	N/A

Check shear

$V_c = (.0316)*\beta \sqrt{f'_c}\, b_v d_v$ *(V_c calculated by AASHTO LRFD eq'n 5.8.3.3-3)*

$\phi = 0.9$ *(AASHTO LRFD 5.5.4.2.1)*

$\beta = 2$ *(AASHTO LRFD 5.8.3.4.1)*

$d_v = .9*d$ or $.72*h$ *whichever is greater (AASHTO LRFD 5.8.2.9)*

anchor	ϕV_c	check $V_u < \phi V_c$
1	64.29	OK
2	42.86	OK
3	34.62	OK
4	0.00	N/A
5	0.00	N/A

VI. CHECK TYPE 'F' ANCHOR ATTACHMENT

Check capacity of connector for pullout (truncated pyramid failure), shear, tension, and combined shear & tension

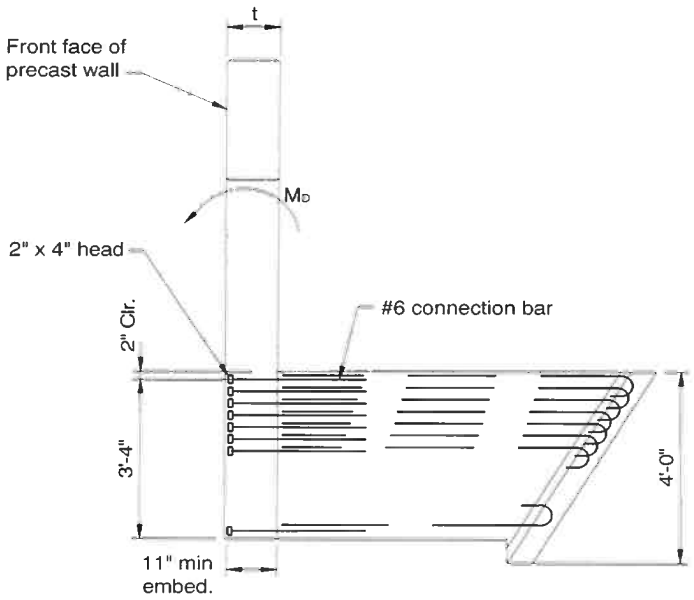

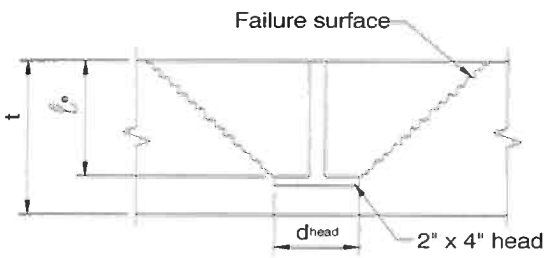

embedment depth (h_e) = **11 in**

Attachment depth = 42 in
X head dimension (Xd_{head}) = 3 in
Y head dimension (Yd_{head}) = 3 in
Bar size = **# 6**
rows = **7**
row spacing = **3 in**
wall thickness (t) = 12 in
x = Xd_{head} (*since only 1 column*) = 3 in
y = (#rows-1)(row spacing) + Yd_{head} = 21 in

z = min(x,y) = 3 in
h_{min} = (z + $2h_e$)/2 = 12.5 in
A_R = (x+$2h_e$-2t)(y+$2h_e$-2t) = 19.0 in^2

f'_c = **4000 psi**
f_y = **60000 psi**
$\phi_{concrete}$ = 0.85
ϕ_{steel} = 0.90

TENSION CAPACITY (Per PCI Design Handbook §6.5.2.1)

t < hmin: failure surface penetrates slab

Find pullout capacity of concrete

if t >= h_{min}, ϕP_c = ϕ2.67sqrt(f'c)(x+2h_e)(y+2h_e)

if t < h_{min}, ϕP_c = ϕ2.67sqrt(f'c)[(x+2h_e)(y+2h_e) - A_R]

ϕP_c = 151.57 K

Find tension capacity of studs

ϕP_y = $\phi f_y(A_{bar})$(#bars)

ϕP_y = 167.00 K

controlling tension capacity (ϕP) = 151.57 K

Find moment capacity of anchor

Moment capacity of anchor (ϕM_n) = ϕP(d-a/2)

d = attachment depth - bar cover - (y-Yd_{head})/2 = 31 in

a = $A_s f_y / 0.85 f'_c b$ = 9.10 in

ϕM_n = 334.12 k-f

SHEAR CAPACITY (Per PCI Design Handbook §6.5.2.2)

Find shear capacity of concrete

$\phi V_c = \phi V'_c C_w C_t C_c$

$\phi V'_c = \phi 12.5 d_e^{1.5} \text{sqrt}(f'_c)$	= 167.6 K
$C_w = 1 + \text{spacing}/3.5d_e < \#\text{columns}$	= 1.0
$C_t = t/1.3d_e <= 1.0$	= 0.23
$C_c = 0.4 + 0.7d_c/de <= 1.0$	= 1.0
d_e = attachment depth - cover - bar dia/2	= 40 in
d_c = distance to side of wingwall	= 36 in

$\phi V_c = \phi V'_c C_w C_t C_c =$ 39.05 K

Find shear capacity of studs

$\phi V_y = \phi 0.9 f_y A_{bar}(\#\text{bars})$

$\phi V_y =$ 150.30 K

controlling shear capacity (ϕV) = 39.05 K

FIND LOADS

Unfactored loads on anchors:

$M_{D(DL)}$ = (sec width)$M_{D(anchor)}$

$M_{D(LL)}$ = (sec width)($M_{D(anchor)}$ + P_{imp}*(wall ht + y_{imp}))

Factored loads:

Load factors are per AASHTO 3.22.1 & Table 3.22.1A

$M_u = (1.3)(1.3)M_{D(DL)} + (1.3)(1.67)M_{D(LL)}$

$P_u = M_u$ /(d-a/2)*cos(bar angle)

$V_u = M_u$ /(d-a/2)*sin(bar angle)

bar angle = 0°

Summary of forces

anchor	$M_{D(DL)}$ ft-k	$M_{D(LL)}$ ft-k	M_u ft-k	P_u k	V_u k
1	102.2	0.0	172.7	78.4	0.0
2	90.9	0.0	153.6	69.7	0.0
3	89.2	0.0	150.7	68.4	0.0
4	0.0	0.0	0.0	0.0	0.0
5	0.0	0.0	0.0	0.0	0.0

Summary of results

anchor	check $\phi M_n > M_u$	check $\phi P > P_u$	check $\phi V > V_u$	check combined V_c & P_c	check combined V_s & P_s
1	*OK*	*OK*	*OK*	*OK*	*OK*
2	*OK*	*OK*	*OK*	*OK*	*OK*
3	*OK*	*OK*	*OK*	*OK*	*OK*
4	*n/a*	*n/a*	*n/a*	*n/a*	*n/a*
5	*n/a*	*n/a*	*n/a*	*n/a*	*n/a*

Estimate: 12-00578417
PropComplete: 3/13/2015

Category	Subcategory	Total Price
Engineering		**$0.00**
Tooling		**$0.00**
Accessories		**$0.00**
Trucking		**$0.00**

Estimate: 12-00578417 V2
Project: MA/DOT: (Boston) I 90 Median Barrier Repair I 90, BOSTON, MA
Product:

>>ECO 4-2-15<< Additional cost/LF to add lifting inserts to top of SF or SFC barrier remaining to be made (barrier quantity to be determined).

Structure Name:
Qty: 1 LF

	QTY	DESCRIPTION	UM	TOTAL PRICE
Concrete				
MIX DSGN 4000PSI (STANDARD) SELF-COMPAC	0.0001	MIX DSGN 4000PSI (STANDARD) SELF-	CY	
Reinforcing				
Embeds				
EM-00031	0.2	ERECTION ANCHORS 4T GALV	EA	
Hardware				
Labor				
TOTAL HOURS	0.025	TOTAL HOURS	HRS	
Lifting Gear				
Coating				
Accessories				
				$0.00
Engineering				
				$0.00
Tooling				
				$0.00
Trucking				
0 Hours	$0.00		0 LDS	$0.00
				$4.00

Section 6
Detached Headwall 1
Calculations

DESIGN PARAMETERS

$f_c := 5000 \quad psi$ $\qquad f_y := 60000 \quad psi$ $\qquad \gamma_e := 140 \cdot \frac{lbf}{ft^3}$ unit weight of earth

$\gamma_w := 62.4 \cdot \frac{lbf}{ft^3}$ unit weight of water $\qquad \beta := 27 \ deg$ ***backslope angle***

$\gamma_c := 150 \cdot \frac{lbf}{ft^3}$ unit weight of concrete $\qquad \psi := 32 \ deg$ **Soil Friction Angle (degrees)**

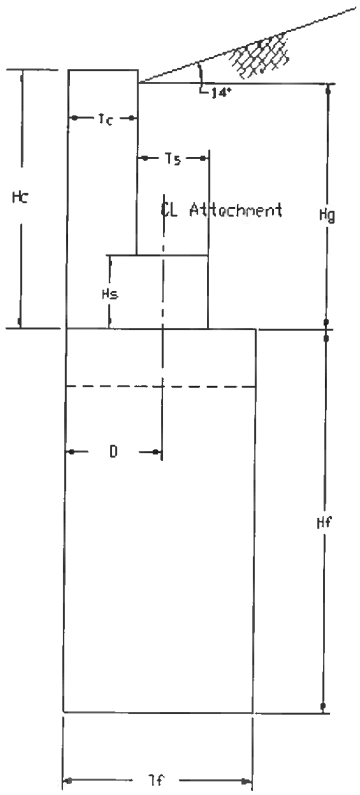

GEOMETRY: HW1

$Hc := 4.33 \cdot ft$ height of headwall $\qquad Hg := 4.16 \cdot ft$ height to grade

$Hs := 12 \cdot in$ height of slab $\qquad Hf := 10.33 \cdot ft$ height of frame

$Tc := 12 \cdot in$ parapet thickness $\qquad Ts := 3.0 \cdot ft$ slab width

$D := 3.0 \cdot ft$ distance to attachment $\qquad Tf := 6.85 \cdot ft$ frame length

$H_s := 5 \cdot ft$ ***height of broken back slope***

$$L_s := \frac{H_s}{\tan(\beta)} = 9.813 \ ft$$

$h := Tf \cdot \tan(\beta) \qquad h = 3.49\ ft$ ***height of backslope soil wedge***

$I := \operatorname{atan}\left(\frac{H_s}{2 \cdot Hg}\right) \qquad I = 31.004\ deg \qquad \beta := \operatorname{if}(\beta > I > 0, I, \beta) \qquad \beta = 27\ deg$

$$K_{max} := \cos(\beta) \cdot \left(\frac{\cos(\beta) - \sqrt{\cos(\beta)^2 - \cos(\psi)^2}}{\cos(\beta) + \sqrt{\cos(\beta)^2 - \cos(\psi)^2}}\right)$$

$K_{max} = 0.473$ max. earth pressure coefficient

$LEPMAX := K_{max} \cdot \gamma_e \cdot 1 \cdot ft = 66.175\ psf$ lateral earth pressure

Lateral Earth Pressure:

$w_{eb} := Hg \cdot LEPMAX = 275.289\ \frac{lbf}{ft}$ base of parapet

$w_e := \frac{w_{eb}}{2} = 137.645\ \frac{lbf}{ft}$

Pedestrian Live Load:

$F_p := 0 \cdot lbf$

Approaching Live Load:

$w_{at} := 800 \cdot \frac{lbf}{ft}$ top of fill

$w_{ab} := 800 \cdot \frac{lbf}{Hc} = 184.758\ \frac{lbf}{ft}$ base of parapet

$w_a := \frac{w_{ab} + w_{at}}{2} = 492.379\ \frac{lbf}{ft}$

Shear: <u>@ base of parapet</u>

$F_e := w_e \cdot Hg = 572.602\ lbf$

$F_a := w_a \cdot Hc = \left(2.132 \cdot 10^3\right)\ lbf$

$V_{u1} := 1.7 \cdot \left(F_e + F_a + F_p\right) = \left(4.598 \cdot 10^3\right)\ lbf$

$V_{u2} := 1.7 \cdot F_e = 973.423\ lbf \qquad V_u := \max\left(V_{u1}, V_{u2}\right) = \left(4.598 \cdot 10^3\right)\ lbf$

$V_{allow} := 37500 \cdot lbf$ Dayton/Richmond 1 1/4" Coil Rod

$NumberInserts := \frac{V_u}{V_{allow}} = 0.123$ / ft.

Shear: @ base of headwall

$F_e := w_e \cdot (Hg - Hs) = 434.957\ lbf$

$F_a := w_a \cdot (Hc - Hs) = (1.64 \cdot 10^3)\ lbf$

$V_{u1} := 1.7 \cdot (F_e + F_a + F_p) = (3.527 \cdot 10^3)\ lbf$

$V_{u2} := 1.7 \cdot F_e = 739.427\ lbf$

$V_u := \max(V_{u1}, V_{u2}) = (3.527 \cdot 10^3)\ lbf$

$d_b := .5 \cdot in$ bar diameter

$c := 2 \cdot in$ bar clear distance

$d := Tc - c - \frac{d_b}{2} = 9.75\ in$

$\phi V_c := .85 \cdot 2 \cdot \sqrt{f_c} \cdot \frac{lbf}{in^2} \cdot 12 \cdot in \cdot d = (1.406 \cdot 10^4)\ lbf$

$\text{if}(\phi V_c > V_u, \text{"OK"}, \text{"NG"}) = \text{"OK"}$

Tension: on attachment

$M_e := \frac{F_e \cdot Hg}{3} = 603.14\ ft \cdot lbf$

$M_p := F_p \cdot Hc = 0\ ft \cdot lbf$

$M_a := \frac{F_a \cdot Hc}{2} = (3.55 \cdot 10^3)\ ft \cdot lbf$

$T_{u1} := 1.7 \cdot \frac{M_a + M_e + M_p}{D} = (2.353 \cdot 10^3)\ lbf$

$T_{u2} := \frac{1.7 \cdot M_e}{D} = 341.78\ lbf$

$T_u := \max(T_{u1}, T_{u2}) = (2.353 \cdot 10^3)\ lbf$

$T_{allow} := 12000 \cdot lbf$ Dayton/Richmond F-58 Coil Insert

$NumberInserts := \frac{T_u}{T_{allow}} = 0.196$ / ft. .

$Spacing := \frac{12}{NumberInserts} = 61.19$

Moment: @ base of headwall

$$M_e := F_e \cdot \left(\left(\frac{Hg}{3}\right) - Hs\right) = 168.183\ ft \cdot lbf$$

$$M_p := F_p \cdot (Hc - Hs) = 0\ ft \cdot lbf$$

$$M_a := F_a \cdot \left(\left(\frac{Hc}{2}\right) - Hs\right) = \left(1.91 \cdot 10^3\right)\ ft \cdot lbf$$

$$M_{u1} := 1.7 \cdot (M_a + M_e + M_p) = \left(3.533 \cdot 10^3\right)\ ft \cdot lbf$$

$$M_{u2} := 1.7 \cdot M_e = 285.912\ ft \cdot lbf \qquad M_u := \max(M_{u1}, M_{u2}) = \left(3.533 \cdot 10^3\right)\ ft \cdot lbf$$

$$d := Hs - c - \frac{d_b}{2} = 9.75\ in$$

$A_s := 0.30 \cdot in^2$ **Area required** **#4 @ 8" E.F.**

$$a := \frac{A_s \cdot f_y}{.85 \cdot f_c \cdot 12 \cdot in} \qquad a = 0.353\ in \qquad f_y := 60000 \cdot psi$$

$$\phi M_n := .9 \cdot A_s \cdot f_y \cdot \left(d - \frac{a}{2}\right) = \left(1.292 \cdot 10^4\right)\ ft \cdot lbf$$

$$\text{if}\left(\phi M_n > M_u, \text{“OK”}, \text{“NG”}\right) = \text{“OK”}$$

Minimum Reinforcement:

$$A_{sMin} := 12 \cdot in \cdot \frac{Tc}{2} \cdot 0.002 = 0.144\ in^2$$

Use #4 @ 16";
As=0.15in^2

Section 7
Detached Headwall 2
Calculations

DESIGN PARAMETERS:

$f_c := 5000$ psi $\qquad f_y := 60000$ psi

$\gamma_w := 62.4 \frac{lbf}{ft^3}$ unit weight of water $\qquad \gamma_e := 140 \frac{lbf}{ft^3}$ unit weight of earth

$\gamma_c := 150 \frac{lbf}{ft^3}$ unit weight of concrete

$K_{max} := .50$ max. earth pressure coefficient

$LEPMAX := K_{max} \cdot \gamma_e \cdot 1ft$ $\qquad LEPMAX = 70 \cdot \frac{lbf}{ft^2}$ lateral earth pressure

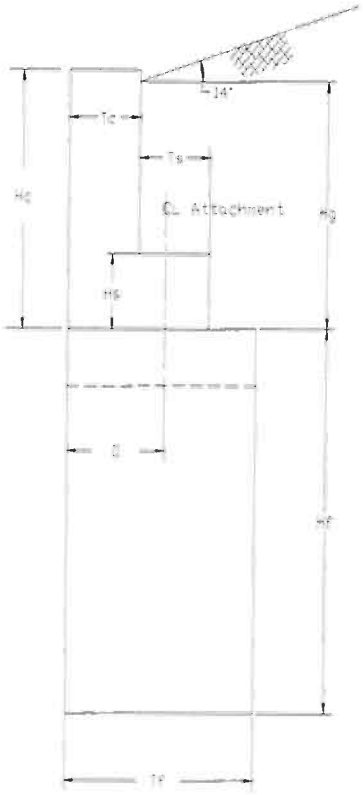

GEOMETRY:

$Hc := 4.33ft$	height of headwall	$Hg := 4.16ft$	height to grade
$Hs := 1.0ft$	height of slab	$Hf := 10.33ft$	height of frame
$Tc := 1.0ft$	parapet thickness	$Ts := 3.0ft$	slab width
$D := 3.0ft$	distance to attachment	$Tf := 6.85ft$	frame length

Lateral Earth Pressure:

$w_{eb} := Hg \cdot LEPMAX$ $\quad w_{eb} = 291 \cdot \frac{lbf}{ft}$ base of parapet

$w_e := \frac{w_{eb}}{2}$ $\quad w_e = 146 \cdot \frac{lbf}{ft}$

Pedestrian Live Load:

$F_p := 0lbf$

Approaching Live Load:

$w_{at} := 800 \cdot \frac{lbf}{ft}$ top of fill

$w_{ab} := 800 \cdot \frac{lbf}{Hc}$ $\quad w_{ab} = 185 \cdot \frac{lbf}{ft}$ base of parapet

$w_a := \frac{w_{ab} + w_{at}}{2}$ $\quad w_a = 492 \cdot \frac{lbf}{ft}$

Shear:

<u>@ base of parapet</u>

$F_e := w_e \cdot Hg$ $\quad F_e = 606 \cdot lbf$

$F_a := w_a \cdot Hc$ $\quad F_a = 2.132 \times 10^3 \cdot lbf$

$V_{u1} := 1.7 \cdot (F_e + F_a + F_p)$ $\quad V_{u1} = 4.654 \times 10^3 \cdot lbf$

$V_{u2} := 1.7 \cdot F_e$ $\quad V_{u2} = 1.030 \times 10^3 \cdot lbf$ $\quad V_u := \max(V_{u1}, V_{u2})$ $\quad V_u = 4.654 \times 10^3 lbf$

$V_{allow} := 37500 \cdot lbf$ Dayton/Richmond 1 1/4" Coil Rod

$NumberInserts := \frac{V_u}{V_{allow}}$ $NumberInserts = 0.124$ /ft.

@ base of headwall

$F_e := w_e \cdot (Hg - Hs)$ $F_e = 460 \cdot lbf$

$F_a := w_a \cdot (Hc - Hs)$ $F_a = 1.640 \times 10^3 \cdot lbf$

$V_{u1} := 1.7 \cdot (F_e + F_a + F_p)$ $V_{u1} = 3.57 \times 10^3 \cdot lbf$

$V_{u2} := 1.7 \cdot F_e$ $V_{u2} = 782.163 \cdot lbf$ $V_u := \max(V_{u1}, V_{u2})$ $V_u = 3.57 \times 10^3\ lbf$

$d_b := .5 \cdot in$ bar diameter $c := 2 \cdot in$ bar clear distance

$d := Tc - c - \frac{d_b}{2}$ $d = 9.75 \cdot in$

$\phi V_c := .85 \cdot 2 \cdot \sqrt{f_c \frac{lbf}{in^2}} \cdot 12in \cdot d$ $\phi V_c = 1.406 \times 10^4 \cdot lbf$ $\text{if}(\phi V_c > V_u, \text{"OK"}, \text{"NG"}) = \text{"OK"}$

Tension: on attachment

$M_e := \frac{F_e \cdot Hg}{3}$ $M_e = 638 \cdot ft \cdot lbf$

$M_p := F_p \cdot Hc$ $M_p = 0 \cdot lbf$

$M_a := \frac{F_a \cdot Hc}{2}$ $M_a = 3.55 \times 10^3 \cdot ft \cdot lbf$

$T_{u1} := 1.7 \cdot \frac{M_a + M_e + M_p}{D}$ $T_{u1} = 2.373 \times 10^3 \cdot lbf$

$T_{u2} := \frac{1.7 \cdot M_e}{D}$ $T_{u2} = 361.5 \cdot lbf$ $T_u := \max(T_{u1}, T_{u2})$ $T_u = 2.373 \times 10^3\ lbf$

$T_{allow} := 12000 \cdot lbf$ Dayton/Richmond F-58 Coil Insert

$NumberInserts := \frac{T_u}{T_{allow}}$ $NumberInserts = 0.198$ /ft. . $Spacing := \frac{12}{NumberInserts}$

$Spacing = 60.681$

Moment: @ base of headwall

$M_e := F_e \cdot \left[\left(\frac{Hg}{3}\right) - Hs\right]$ $\quad M_e = 177.904 \cdot ft \cdot lbf$

$M_p := F_p \cdot (Hc - Hs)$ $\quad M_p = 0 \cdot lbf$

$M_a := F_a \cdot \left[\left(\frac{Hc}{2}\right) - Hs\right]$ $\quad M_a = 1.91 \times 10^3 \cdot ft \cdot lbf$

$M_{u1} := 1.7 \cdot (M_a + M_e + M_p)$ $\quad M_{u1} = 3.55 \times 10^3\, ft \cdot lbf$

$M_{u2} := 1.7 \cdot M_e$ $\quad \boxed{M_{u2} = 302.4\, ft \cdot lbf}$ $\quad M_u := \max(M_{u1}, M_{u2})$ $\quad M_u = 3.55 \times 10^3 \cdot ft \cdot lbf$

$d := Hs - c - \frac{d_b}{2}$ $\quad d = 9.75 \cdot in$

$A_s := 0.30 \cdot in^2$ $\quad$ #4 @ 8" E.F.

$a := \frac{A_s \cdot f_y}{.85 \cdot f_c \cdot 12 \cdot in}$ $\quad a = 0.353 \cdot in$ $\quad f_y := 60000 \cdot psi$

$\phi M_n := .9 \cdot A_s \cdot f_y \cdot \left(d - \frac{a}{2}\right)$ $\quad \boxed{\phi M_n = 1.292 \times 10^4 \cdot ft \cdot lbf}$ $\quad \text{if}(\phi M_n > M_u, \text{"OK"}, \text{"NG"}) = \text{"OK"}$

Minimum Reinforcement:

$A_{sMin} := 12in \cdot \frac{Tc}{2} \cdot 0.002$ $\quad A_{sMin} = 0.144 \cdot in^2$ $\quad$ Use #4 @ 16"; As=0.15in^2

Section 8
Bridge Load Rating Statement

LOAD RATING REQUIREMENT

The effect of live loads diminishes with increase in the earth cover, especially above 8ft, when compared with the effect of dead load (which increases).

This structure has between 9ft-12ft of earth cover; as such live load effect is insignificant.

It can, therefore, be safely concluded that a load rating for this structure would be meaningless.