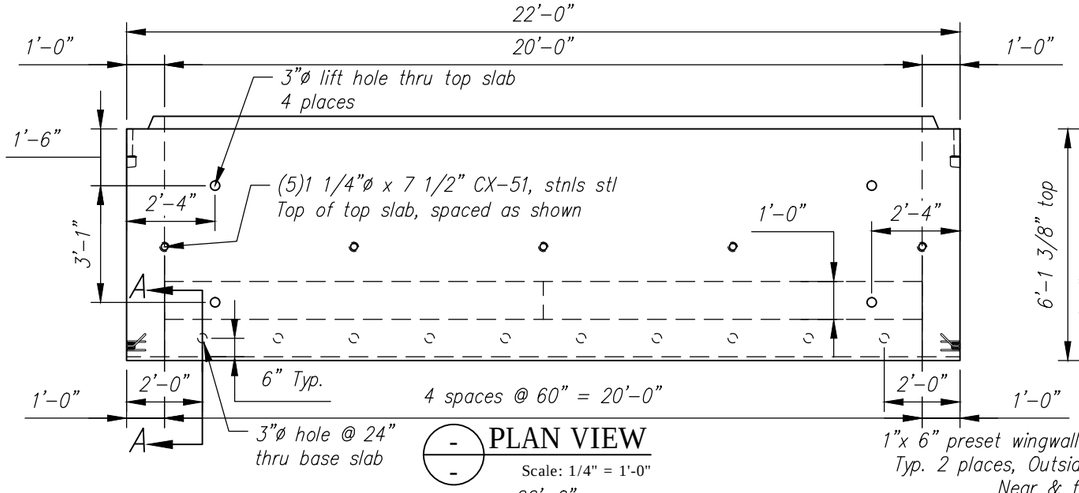

PLAN VIEW

Scale: 1/4" = 1'-0"

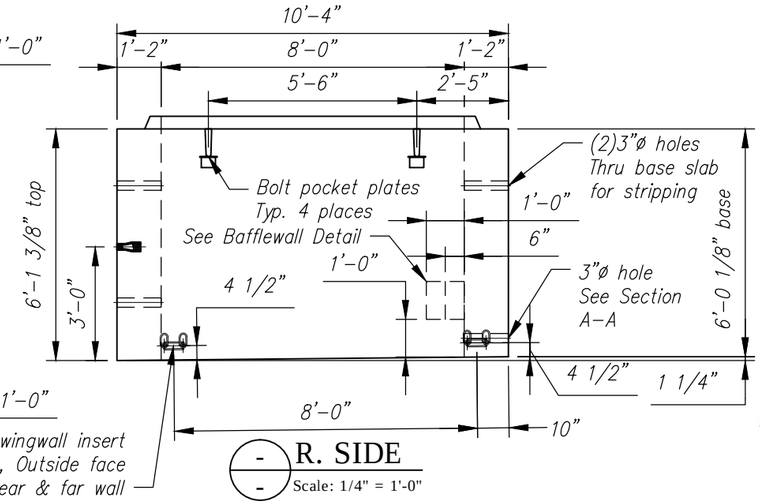

R. SIDE

Scale: 1/4" = 1'-0"

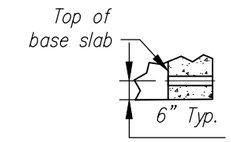

SECTION A-A

Scale: N.T.S.

A1 Rebar Schedule			
MK		QTY	LENGTH
401	#4	18	9 '- 6 "
402	#4	138	5 '- 9 "
501	#5	16	21 '- 6 "
701	#7	34	24 '- 1 "
702	#7	36	21 '- 6 "

A1 BW Rebar Schedule			
MK		QTY	LENGTH
403	#4	2	19 '- 8 "

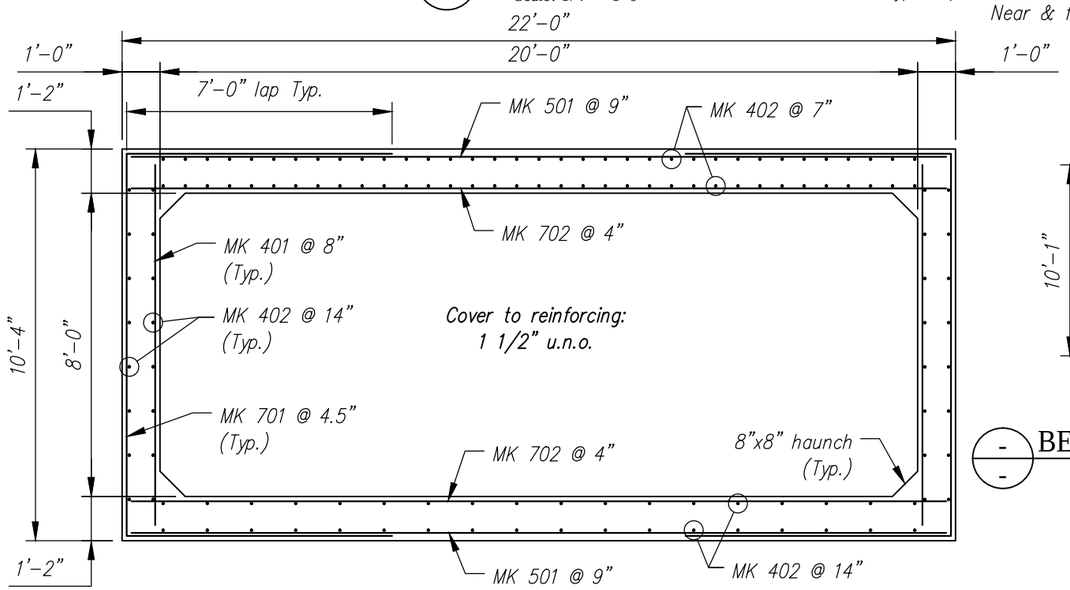

REINFORCING DETAIL

Scale: N.T.S.

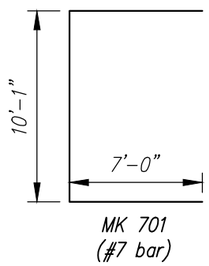

BENDING SCHEDULE

Scale: N.T.S.

A1 - BILL OF MATERIALS / EMBEDS				
CSI ID#	DESCRIPTION	QTY	UM	COMMENTS
CT-00005	CONSOLIDECK SALTGUARD (SILANE SILOXANE)	0.34	GA	
EM-0005A	1" X 6 " PRESET WING INSERTS	4	EA	
EM-00014	DBSAE #6 X 18" PLAIN	38	EA	DOWEL BAR SPLICER
EM-00026	1-1/4 EC4 OPEN COIL 4STRT INSERT CX51	5	EA	
EM-00033	3" FOAM CORE PVC	18.67	FT	
EM-00125	BOLT POCKET PLATES (GALVANIZED)	4	EA	
RM-00013	REBAR #4 BLACK- GR 60	644	LB	
RM-00015	REBAR #5 BLACK-GR 60 40'	359	LB	
RM-00009	REBAR #7 BLACK-GR 60	3256	LB	
MX-FA5000SC30	MIX DESIGN - FLY ASH 5000 SELF CONSOLIDATING	15.37	CY	
A1 BAFFLE WALL - BILL OF MATERIALS / EMBEDS				
EM-00022	DI #6 X 18" BLACK	38	EA	DOWEL IN
RM-00013	REBAR #4 BLACK- GR 60	26	LB	
MX-FA5000SC30	MIX DESIGN - FLY ASH 5000 SELF CONSOLIDATING	0.51	CY	

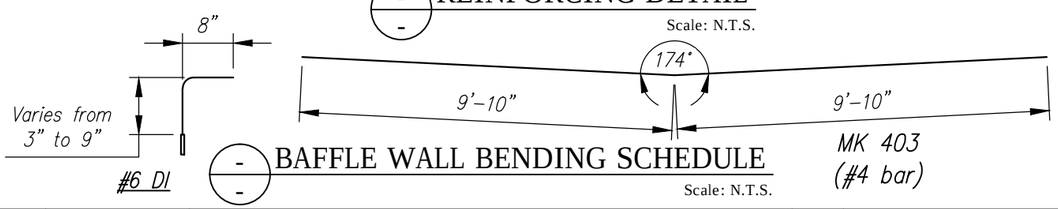

BAFFLE WALL BENDING SCHEDULE

Scale: N.T.S.

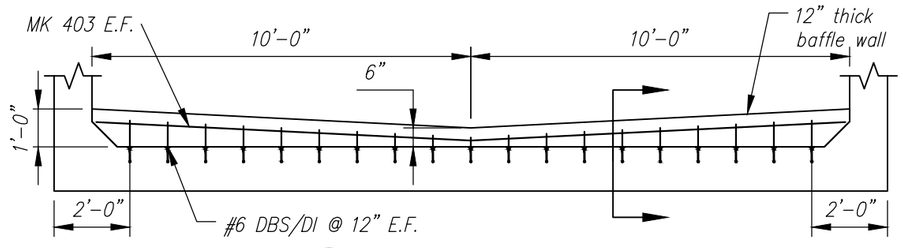

BAFFLE WALL DETAIL

Scale: N.T.S.

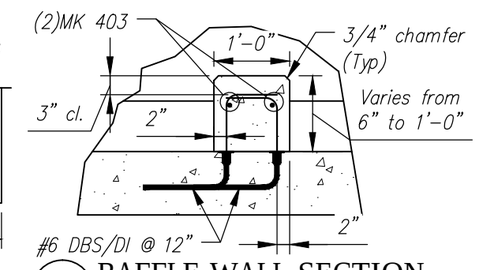

BAFFLE WALL SECTION

Scale: N.T.S.

Rev.	Date	DESCRIPTION	By
5			
4			
3			
2			
1			

REVISIONS

Concrete Systems Inc.
9 Commercial St., Hudson, NH,03051
Phone 603-889-4163
Fax 603-889-2417

STATE AGENCY

VTrans Working to Get You There VERMONT AGENCY OF TRANSPORTATION

J A MCDONALD, INC.
VT/AOT BRIDGE – STEEL CULVERT REPLACEMENT
BRIDGE #6, VT ROUTE 58, IRASBURG, VT

Drawn By R. YEAGER	Date 12MAR2015	B	SHOP DRAWING – A1
Concrete Cu. Yd. 16.08	Weight in Tons 32.56		Drawing No. C22283–L01–A1
Approved By	Date	Quantity: 1	Project No: STPCULV30

REV 0

SHEET 1 OF 13

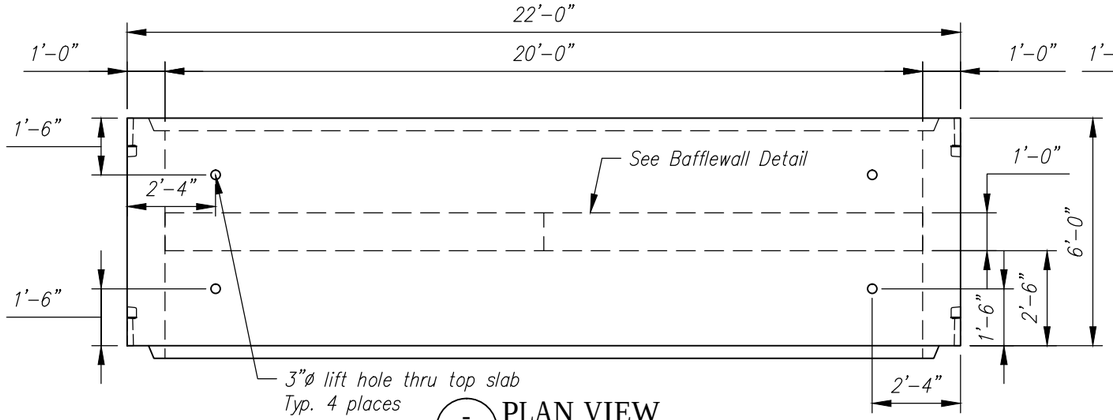

PLAN VIEW
Scale: 1/4" = 1'-0"

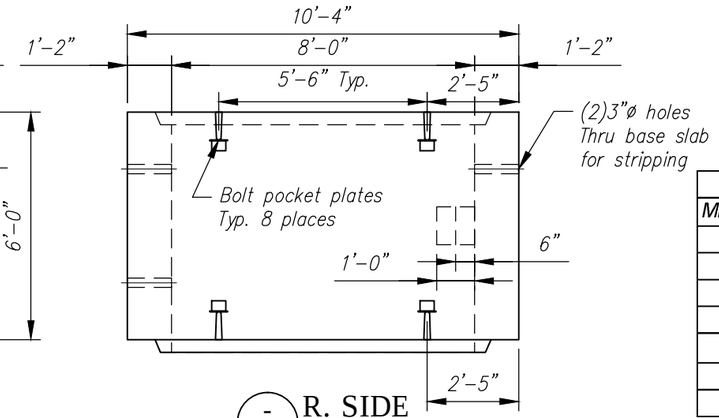

R. SIDE
Scale: 1/4" = 1'-0"

A2 Rebar Schedule			
MK		QTY	LENGTH
401	#4	18	9 '- 6 "
402	#4	138	5 '- 9 "
501	#5	16	21 '- 6 "
701	#7	34	24 '- 1 "
702	#7	36	21 '- 6 "

A2 BW Rebar Schedule			
MK		QTY	LENGTH
403	#4	2	19 '- 8 "

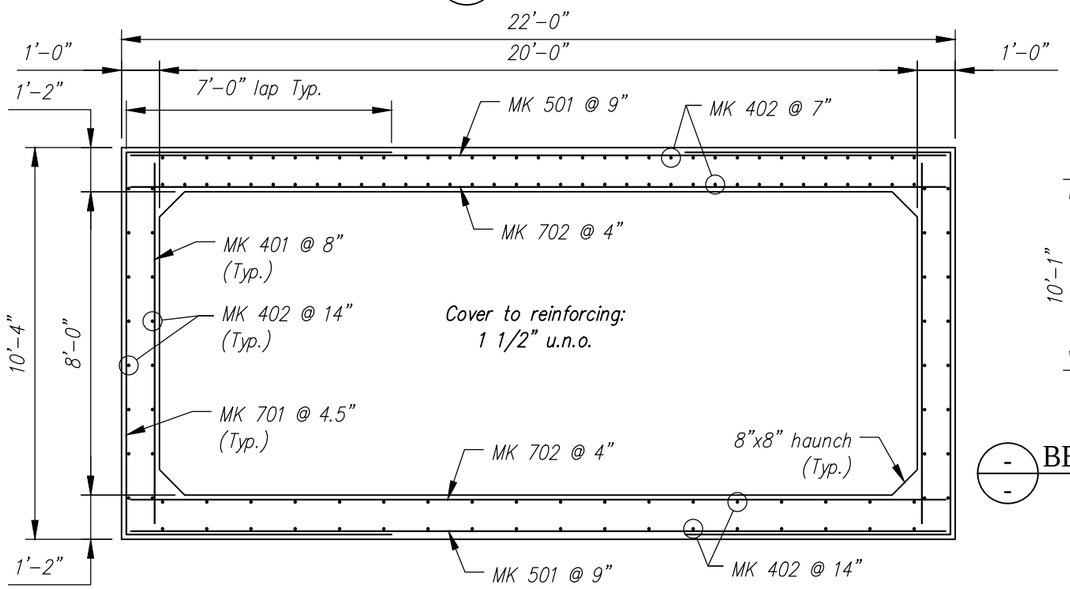

REINFORCING DETAIL
Scale: N.T.S.

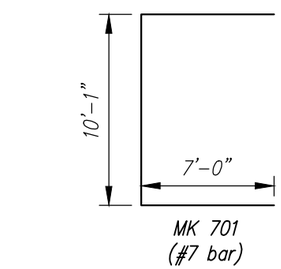

BENDING SCHEDULE
Scale: N.T.S.

A2 - BILL OF MATERIALS / EMBEDS				
CSI ID#	DESCRIPTION	QTY	UM	COMMENTS
EM-00014	DBSAE #6 X 18" PLAIN	38	EA	DOWEL BAR SPLICER
EM-00033	3" FOAM CORE PVC	7	FT	
EM-00125	BOLT POCKET PLATES (GALVANIZED)	8	EA	
JS-00002	1"X1"CLOSED NEOP GASKET	62	FT	AROUND BELL
RM-00013	REBAR #4 BLACK- GR 60	644	LB	
RM-00015	REBAR #5 BLACK-GR 60 40'	359	LB	
RM-00009	REBAR #7 BLACK-GR 60	3256	LB	
MX-FA5000SC30	MIX DESIGN - FLY ASH 5000 SELF CONSOLIDATING	15.19	CY	
A2 BAFFLE WALL - BILL OF MATERIALS / EMBEDS				
EM-00022	DI #6 X 18" BLACK	38	EA	DOWEL IN
RM-00013	REBAR #4 BLACK- GR 60	26	LB	
MX-FA5000SC30	MIX DESIGN - FLY ASH 5000 SELF CONSOLIDATING	0.51	CY	

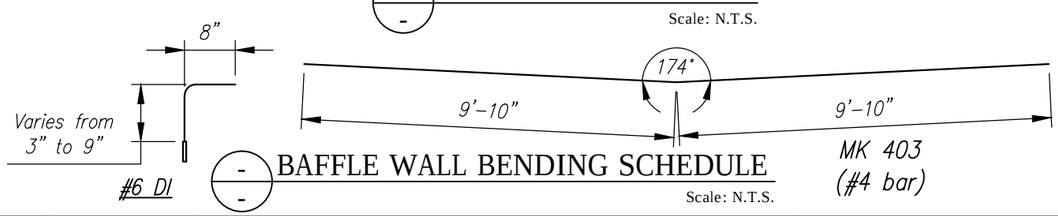

BAFFLE WALL BENDING SCHEDULE
Scale: N.T.S.

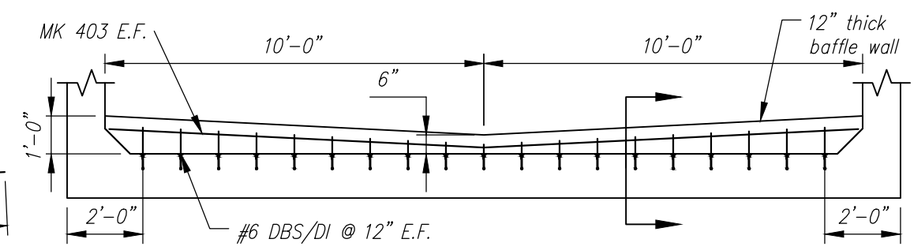

BAFFLE WALL DETAIL
Scale: N.T.S.

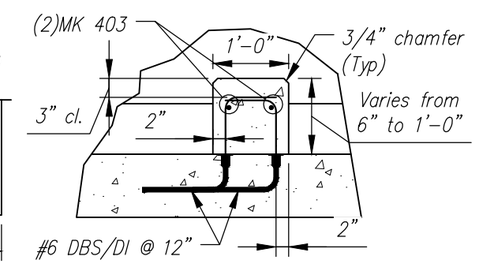

BAFFLE WALL SECTION
Scale: N.T.S.

Rev.	Date	DESCRIPTION	By
5			
4			
3			
2			
1			

REVISIONS

Concrete Systems Inc.
9 Commercial St., Hudson, NH,03051
Phone 603-889-4163
Fax 603-889-2417

STATE AGENCY
VTrans Working to Get You There VERMONT AGENCY OF TRANSPORTATION

Drawn By R. YEAGER	Date 12MAR2015
Concrete Cu. Yd. 15.70	Weight in Tons 31.79
Approved By	Date

J A MCDONALD, INC.
VT/AOT BRIDGE – STEEL CULVERT REPLACEMENT
BRIDGE #6, VT ROUTE 58, IRASBURG, VT

B | SHOP DRAWING – A2 | REV 0
Drawing No. C22283–L01–A2
Quantity: 9 | Project No: STPCULV30 | SHEET 2 OF 13

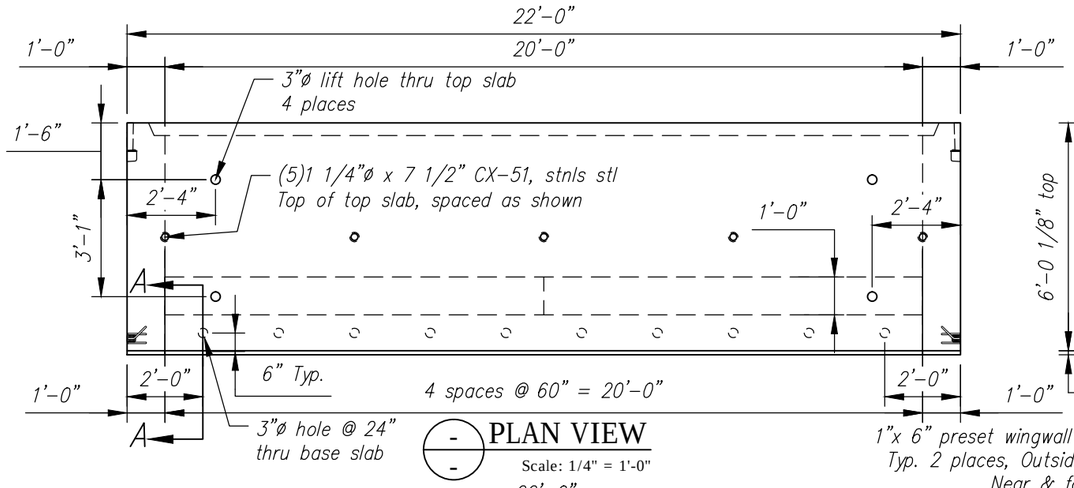

PLAN VIEW
Scale: 1/4" = 1'-0"

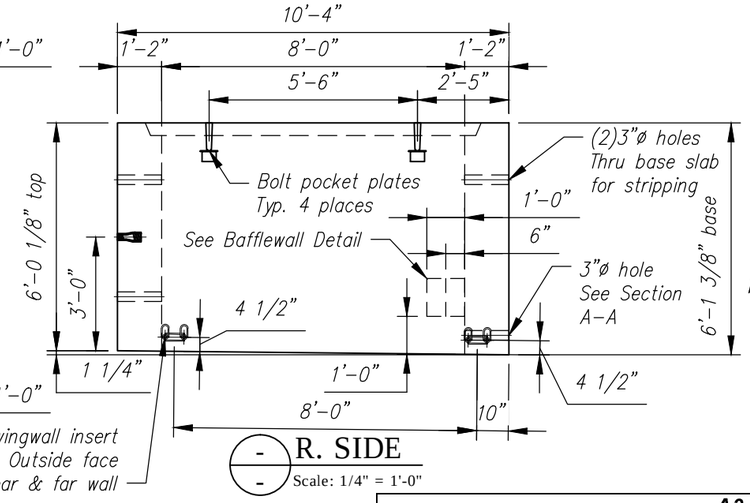

R. SIDE
Scale: 1/4" = 1'-0"

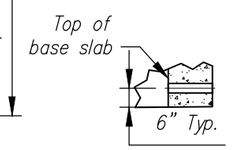

SECTION A-A
Scale: N.T.S.

A3 Rebar Schedule			
MK		QTY	LENGTH
401	#4	18	9 '- 6 "
402	#4	138	5 '- 9 "
501	#5	16	21 '- 6 "
701	#7	34	24 '- 1 "
702	#7	36	21 '- 6 "

A3 BW Rebar Schedule			
MK		QTY	LENGTH
403	#4	2	19 '- 8 "

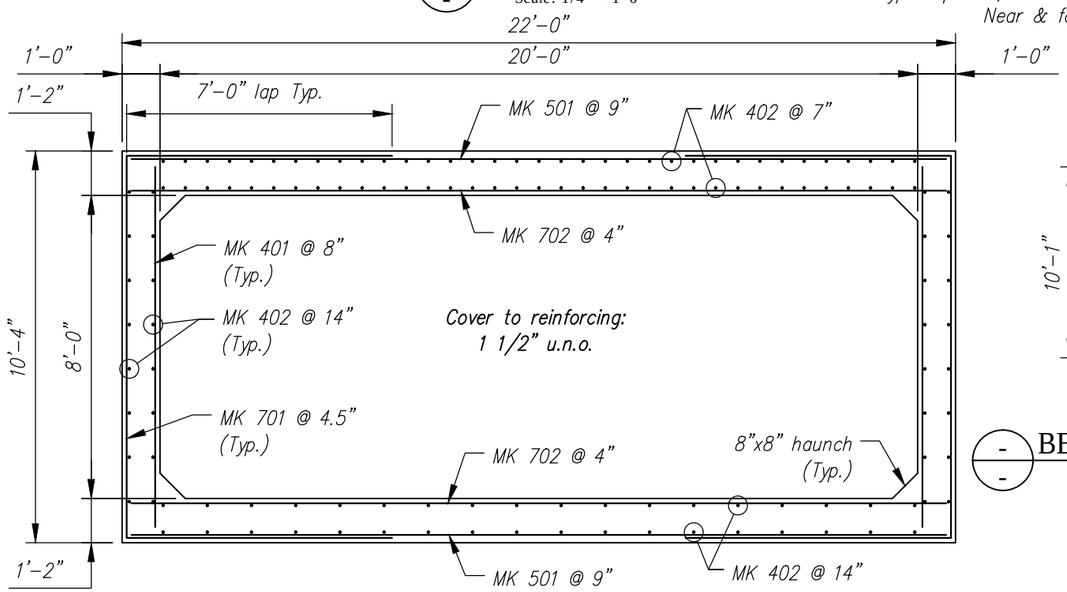

REINFORCING DETAIL
Scale: N.T.S.

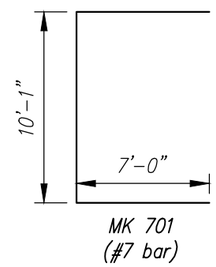

BENDING SCHEDULE
Scale: N.T.S.

A3 - BILL OF MATERIALS / EMBEDS				
CSI ID#	DESCRIPTION	QTY	UM	COMMENTS
CT-00005	CONSOLIDECK SALTGUARD (SILANE SILOXANE)	0.34	GA	
EM-0005A	1" X 6 " PRESET WING INSERTS	4	EA	
EM-00014	DBSAE #6 X 18" PLAIN	38	EA	DOWEL BAR SPLICER
EM-00026	1-1/4 EC4 OPEN COIL 4STRT INSERT CX51	5	EA	
EM-00033	3" FOAM CORE PVC	18.67	FT	
EM-00125	BOLT POCKET PLATES (GALVANIZED)	4	EA	
JS-00002	1"X1"CLOSED NEOP GASKET	62	FT	AROUND BELL
RM-00013	REBAR #4 BLACK- GR 60	644	LB	
RM-00015	REBAR #5 BLACK-GR 60 40'	359	LB	
RM-00009	REBAR #7 BLACK-GR 60	3256	LB	
MX-FA5000SC30	MIX DESIGN - FLY ASH 5000 SELF CONSOLIDATING	15.11	CY	
A3 BAFFLE WALL - BILL OF MATERIALS / EMBEDS				
EM-00022	DI #6 X 18" BLACK	38	EA	DOWEL IN
RM-00013	REBAR #4 BLACK- GR 60	26	LB	
MX-FA5000SC30	MIX DESIGN - FLY ASH 5000 SELF CONSOLIDATING	0.51	CY	

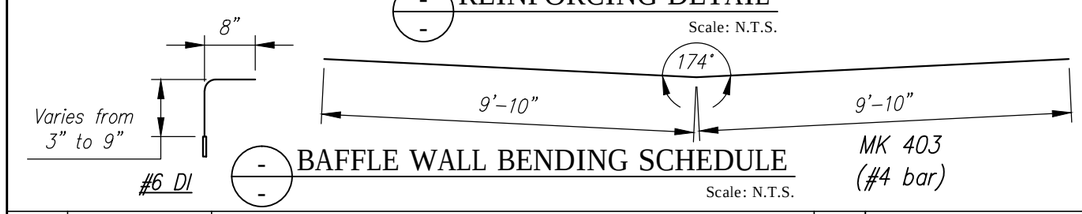

BAFFLE WALL BENDING SCHEDULE
Scale: N.T.S.

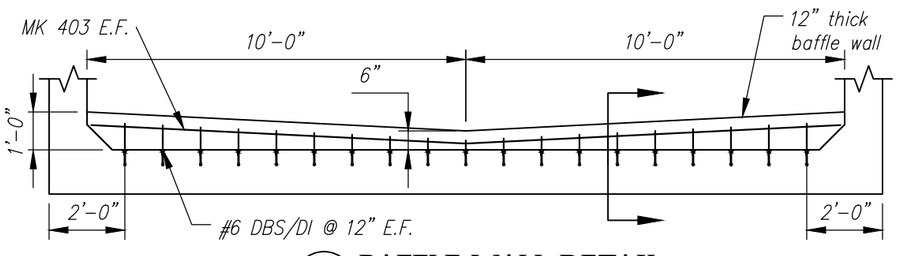

BAFFLE WALL DETAIL
Scale: N.T.S.

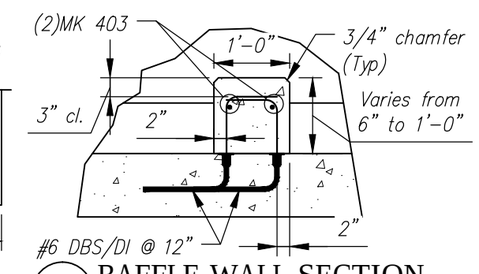

BAFFLE WALL SECTION
Scale: N.T.S.

Rev.	Date	DESCRIPTION	By
5			
4			
3			
2			
1			

REVISIONS

Concrete Systems Inc.
9 Commercial St., Hudson, NH,03051
Phone 603-889-4163
Fax 603-889-2417

STATE AGENCY

VTrans Working to Get You There VERMONT AGENCY OF TRANSPORTATION

Drawn By R. YEAGER	Date 12MAR2015
Concrete Cu. Yd. 15.62	Weight in Tons 31.63
Approved By	Date

J A MCDONALD, INC.
VT/AOT BRIDGE – STEEL CULVERT REPLACEMENT
BRIDGE #6, VT ROUTE 58, IRASBURG, VT

B

SHOP DRAWING – A3

Drawing No. C22283–L01–A3

REV 0

Quantity: 1 | Project No: STPCULV30 | SHEET 3 OF 13

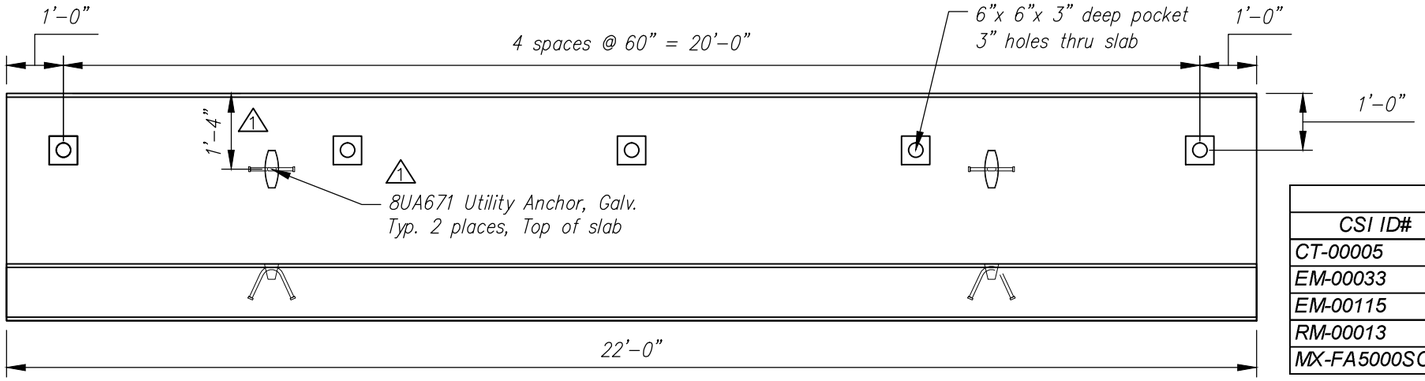

PLAN VIEW
Scale: N.T.S.

HW1A Rebar Schedule			
MK		QTY	LENGTH
401	#4	33	10 '- 8 "
402	#4	33	9 '- 8 "
403	#4	15	21 '- 9 "

HW1A HEADWALL - BILL OF MATERIALS / EMBEDS				
CSI ID#	DESCRIPTION	QTY	UM	COMMENTS
CT-00005	CONSOLIDECK SALTGUARD (SILANE SILOXANE)	0.70	GA	
EM-00033	3" FOAM CORE PVC	3.75	FT	
EM-00115	UTILITY ANCHOR #8UA671-GALVANIZED	4	EA	
RM-00013	REBAR #4 BLACK- GR 60	666	LB	
MX-FA5000SC30	MIX DESIGN - FLY ASH 5000 SELF CONSOLIDATING	5.98	CY	

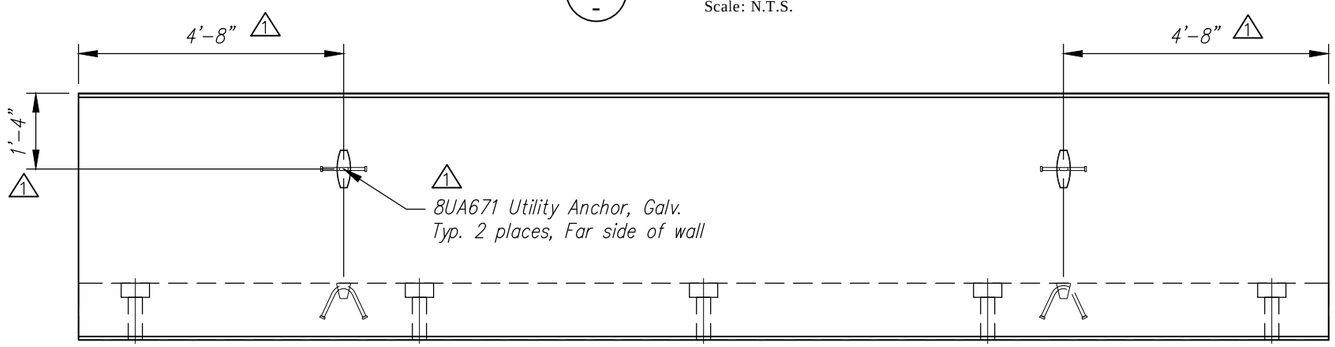

ELEVATION
Scale: N.T.S.

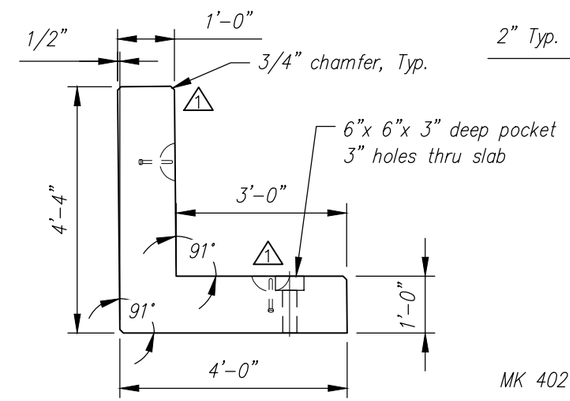

R. SIDE
Scale: N.T.S.

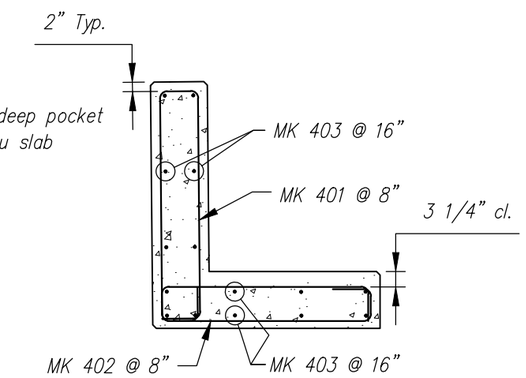

REINFORCING DETAIL
Scale: N.T.S.

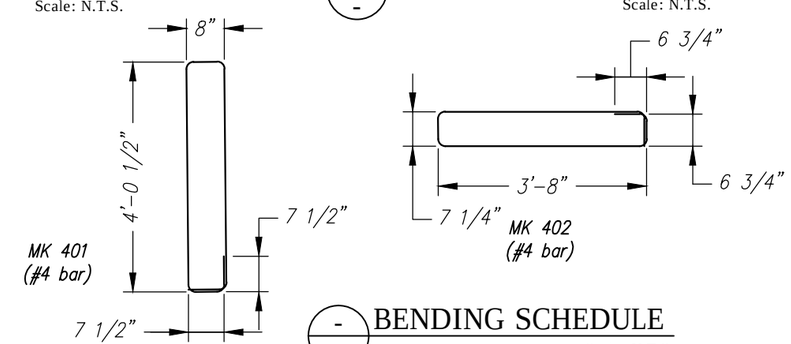

BENDING SCHEDULE
Scale: N.T.S.

Rev.	Date	DESCRIPTION	By
5			
4			
3			
2			
1	28APR2015	REVISED LOCATION OF UTILITY ANCHORS, QTY WAS 6	RY

REVISIONS

Concrete Systems Inc.
9 Commercial St., Hudson, NH,03051
Phone 603-889-4163
Fax 603-889-2417

STATE AGENCY

VTrans Working to Get You There VERMONT AGENCY OF TRANSPORTATION

Drawn By R. YEAGER	Date 12MAR2015
Concrete Cu. Yd. 5.98	Weight in Tons 12.11
Approved By	Date

J A MCDONALD, INC.
VT/AOT BRIDGE – STEEL CULVERT REPLACEMENT
BRIDGE #6, VT ROUTE 58, IRASBURG, VT

B

SHOP DRAWING – HW1A

Drawing No. C22283–L01–HW1A

REV 1

Quantity: 1 | Project No: STPCULV30 | SHEET 4 OF 13

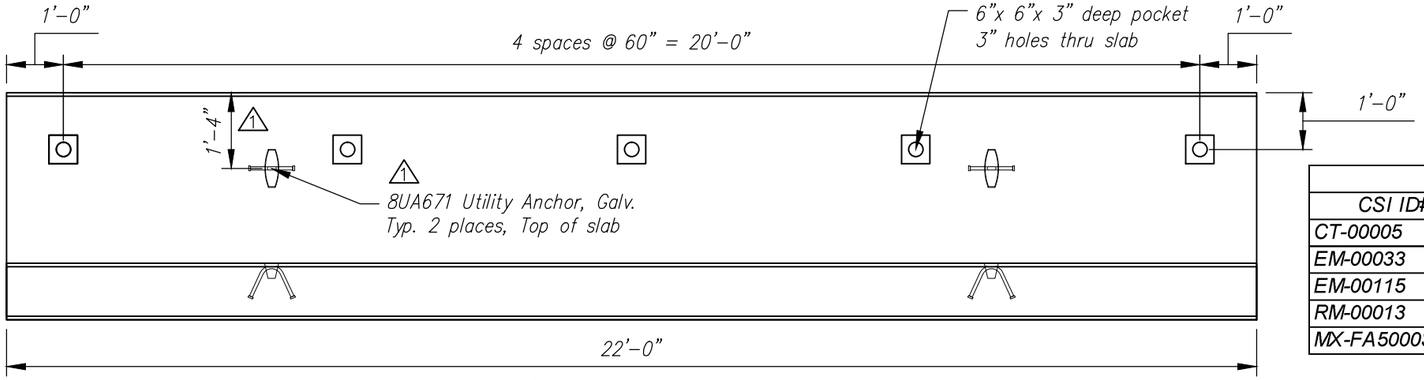

PLAN VIEW
Scale: N.T.S.

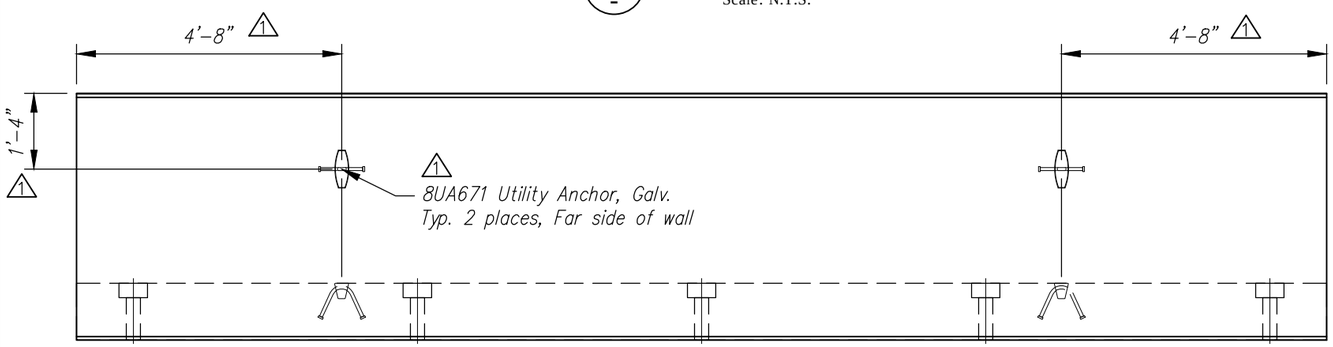

ELEVATION
Scale: N.T.S.

HW2A Rebar Schedule			
MK		QTY	LENGTH
401	#4	33	10 '- 8 "
402	#4	33	9 '- 8 "
403	#4	15	21 '- 9 "

HW2A HEADWALL - BILL OF MATERIALS / EMBEDS				
CSI ID#	DESCRIPTION	QTY	UM	COMMENTS
CT-00005	CONSOLIDECK SALTGUARD (SILANE SILOXANE)	0.70	GA	
EM-00033	3" FOAM CORE PVC	3.75	FT	
EM-00115	UTILITY ANCHOR #8UA671-GALVANIZED	4	EA	
RM-00013	REBAR #4 BLACK- GR 60	666	LB	
MX-FA5000SC30	MIX DESIGN - FLY ASH 5000 SELF CONSOLIDATING	5.98	CY	

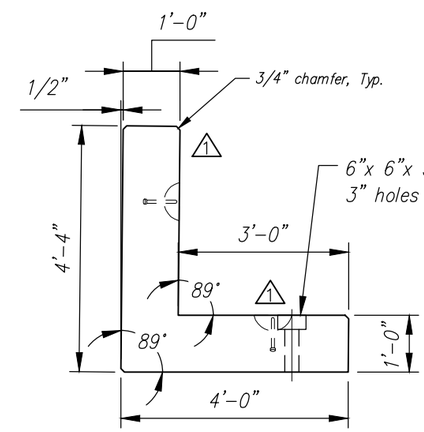

R. SIDE
Scale: N.T.S.

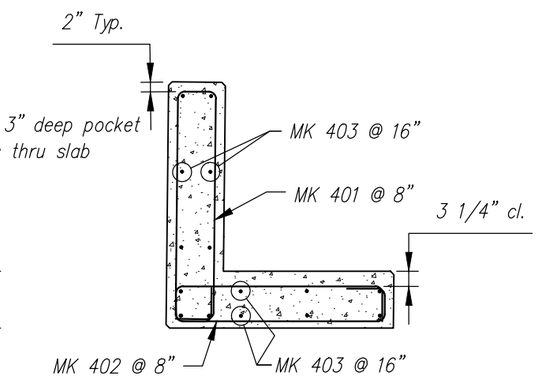

REINFORCING DETAIL
Scale: N.T.S.

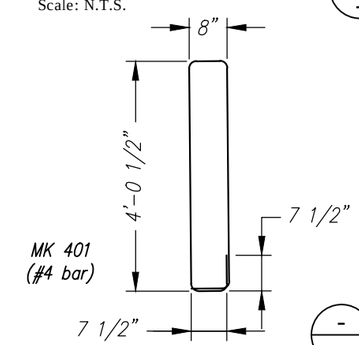

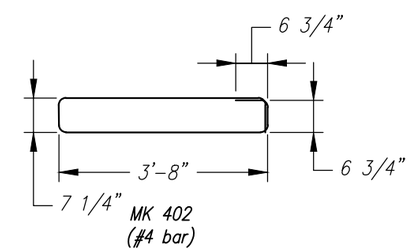

BENDING SCHEDULE
Scale: N.T.S.

Rev.	Date	DESCRIPTION	By
5			
4			
3			
2			
1	28APR2015	REVISED LOCATIONS OF UTILITY ANCHORS, QTY WAS 6	RY

REVISIONS

Concrete Systems Inc.
9 Commercial St., Hudson, NH,03051
Phone 603-889-4163
Fax 603-889-2417

STATE AGENCY
VTrans Working to Get You There VERMONT AGENCY OF TRANSPORTATION

Drawn By R. YEAGER	Date 12MAR2015
Concrete Cu. Yd. 5.98	Weight in Tons 12.11
Approved By	Date

J A MCDONALD, INC.
VT/AOT BRIDGE – STEEL CULVERT REPLACEMENT
BRIDGE #6, VT ROUTE 58, IRASBURG, VT

B

SHOP DRAWING – HW2A

Drawing No. C22283–L01–HW2A

REV 1

Quantity: 1 | Project No: STPCULV30 | SHEET 5 OF 13

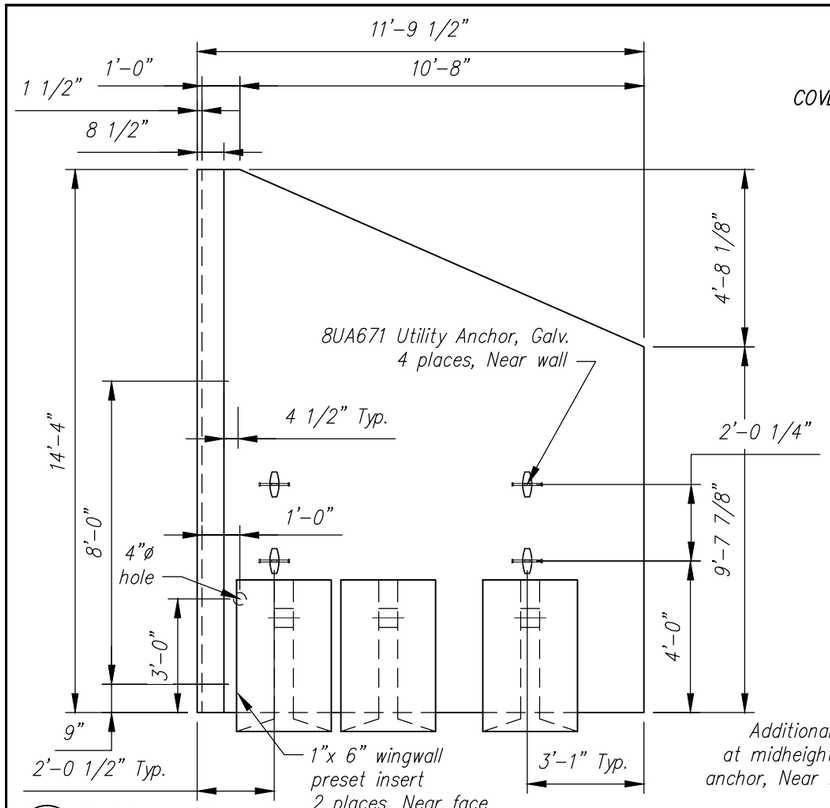

PLAN VIEW
Scale: N.T.S.

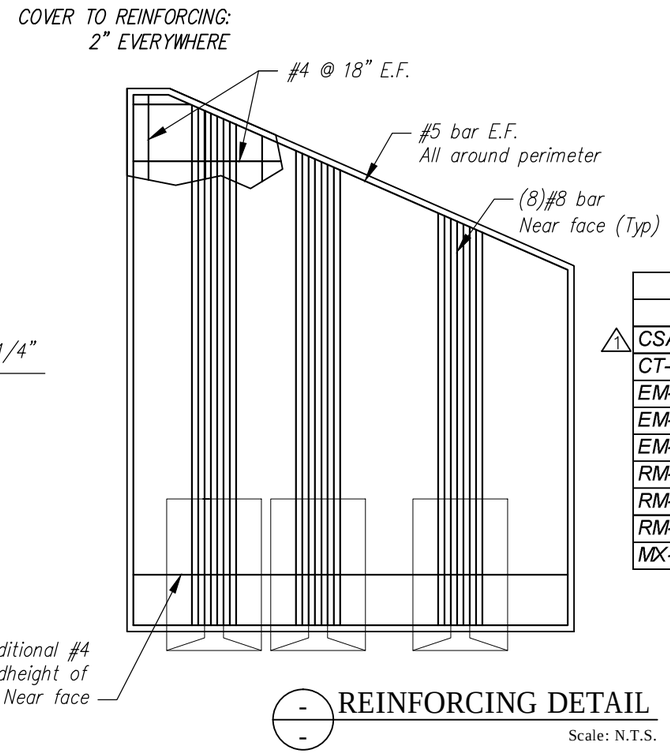

REINFORCING DETAIL
Scale: N.T.S.

WW1A WINGWALL - BILL OF MATERIALS / EMBEDS				
CSI ID#	DESCRIPTION	QTY	UM	COMMENTS
1 CSANC-F	CON/SPAN WINGWALL ANCHOR (F)	3	EA	
CT-00005	CONSOLIDECK SALTGUARD (SILANE SILOXANE)	0.82	GA	
EM-0005A	1" X 6 " PRESET WING INSERTS	2	EA	
EM-00034	4" FOAM CORE PVC	1	FT	
EM-00115	UTILITY ANCHOR #8UA671-GALVANIZED	4	EA	
RM-00013	REBAR #4 BLACK- GR 60	295	LB	
RM-00015	REBAR #5 BLACK-GR 60 40'	99	LB	
RM-00104	REBAR #8 BLACK-GR 60	897	LB	
MX-FA5000SC30	MIX DESIGN - FLY ASH 5000 SELF CONSOLIDATING	5.02	CY	

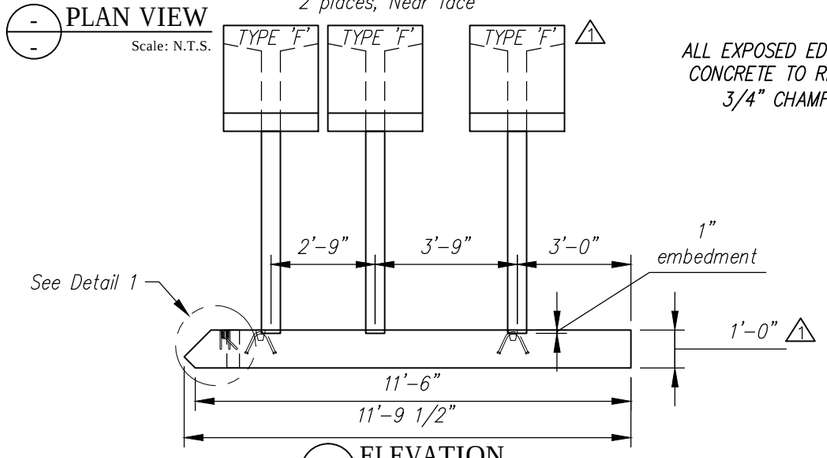

ELEVATION
Scale: N.T.S.

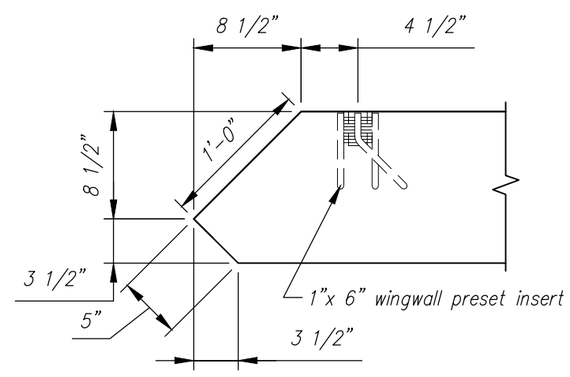

DETAIL 1
Scale: N.T.S.

Rev.	Date	DESCRIPTION	By
5			
4			
3			
2			
1	01APR2015	WW ANCHORS WERE TYPE 'D', WALL WAS 10" THK	RY

REVISIONS

CSI Concrete Systems Inc.
9 Commercial St., Hudson, NH,03051
Phone 603-889-4163
Fax 603-889-2417

STATE AGENCY
VTrans Working To Get You There VERMONT AGENCY OF TRANSPORTATION

J A MCDONALD, INC.
VT/AOT BRIDGE – STEEL CULVERT REPLACEMENT
BRIDGE #6, VT ROUTE 58, IRASBURG, VT

Drawn By R. YEAGER	Date 12MAR2015	B	SHOP DRAWING – WW1A
Concrete Cu. Yd. 7.09	Weight in Tons 14.36		Drawing No. C22283–LO1–WW1A
Approved By	Date	Quantity: 1	Project No: STPCULV30

REV 1

SHEET 6 OF 13

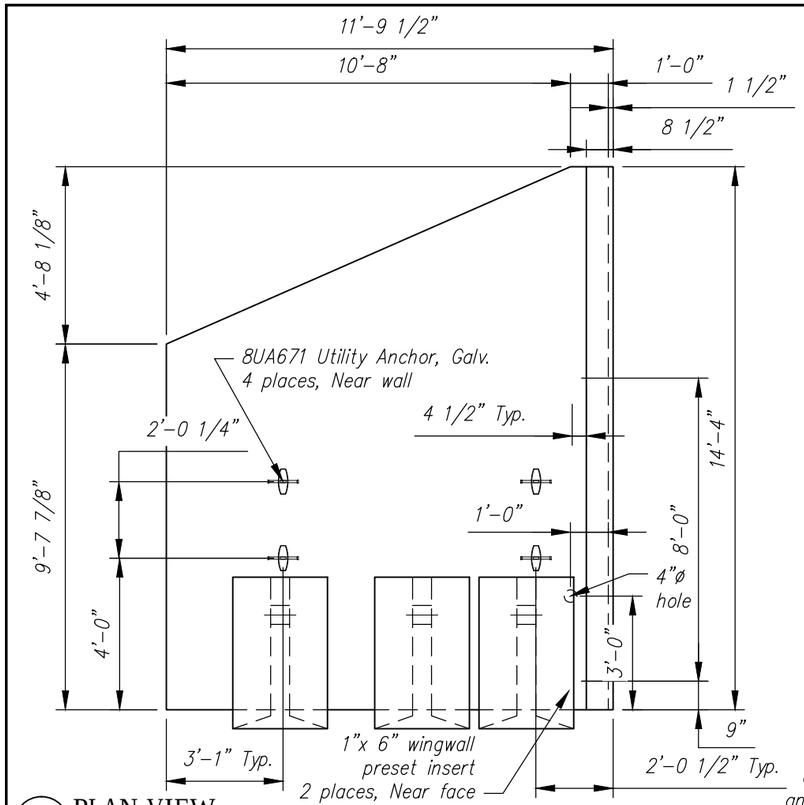

PLAN VIEW
Scale: N.T.S.

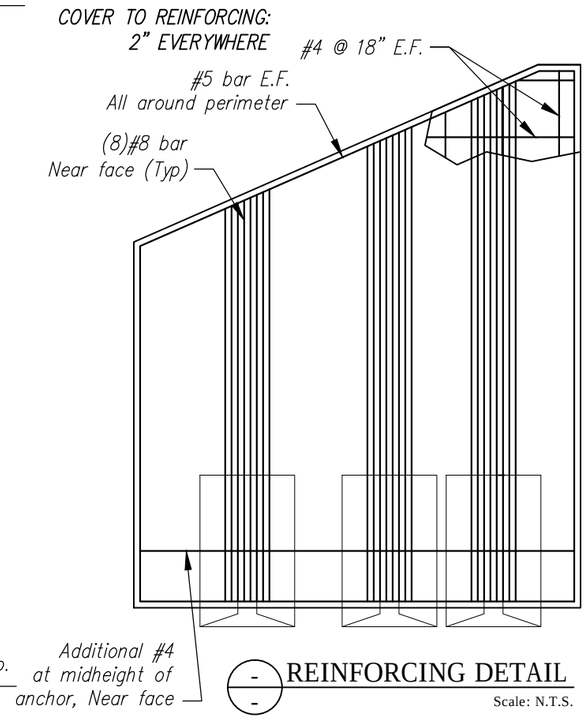

REINFORCING DETAIL
Scale: N.T.S.

WW2A WINGWALL - BILL OF MATERIALS / EMBEDS				
CSI ID#	DESCRIPTION	QTY	UM	COMMENTS
CSANC-F	CON/SPAN WINGWALL ANCHOR (F)	3	EA	
CT-00005	CONSOLIDECK SALTGUARD (SILANE SILOXANE)	0.82	GA	
EM-0005A	1" X 6 " PRESET WING INSERTS	2	EA	
EM-00034	4" FOAM CORE PVC	1	FT	
EM-00115	UTILITY ANCHOR #8UA671-GALVANIZED	4	EA	
RM-00013	REBAR #4 BLACK- GR 60	295	LB	
RM-00015	REBAR #5 BLACK-GR 60 40'	99	LB	
RM-00104	REBAR #8 BLACK-GR 60	897	LB	
MX-FA5000SC30	MIX DESIGN - FLY ASH 5000 SELF CONSOLIDATING	5.02	CY	

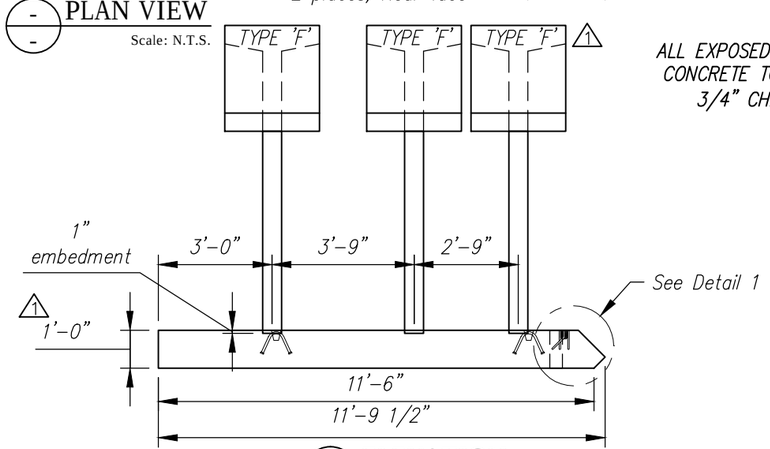

ELEVATION
Scale: N.T.S.

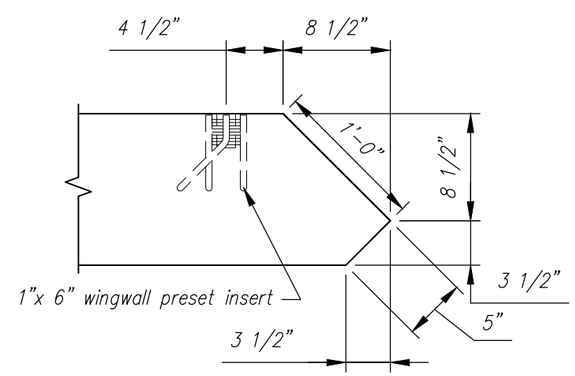

DETAIL 1
Scale: N.T.S.

Rev.	Date	DESCRIPTION	By
5			
4			
3			
2			
1	01APR2015	WW ANCHORS WERE TYPE 'D', WALL WAS 10" THK	RY

REVISIONS

Concrete Systems Inc.
9 Commercial St., Hudson, NH,03051
Phone 603-889-4163
Fax 603-889-2417

STATE AGENCY
VTrans Working to Get You There VERMONT AGENCY OF TRANSPORTATION

Drawn By R. YEAGER	Date 12MAR2015
Concrete Cu. Yd. 7.09	Weight in Tons 14.36
Approved By	Date

J A MCDONALD, INC.
VT/AOT BRIDGE – STEEL CULVERT REPLACEMENT
BRIDGE #6, VT ROUTE 58, IRASBURG, VT

B | SHOP DRAWING – WW2A | REV 1
Drawing No. C22283–L01–WW2A

Quantity: 1 | Project No: STPCULV30 | SHEET 7 OF 13

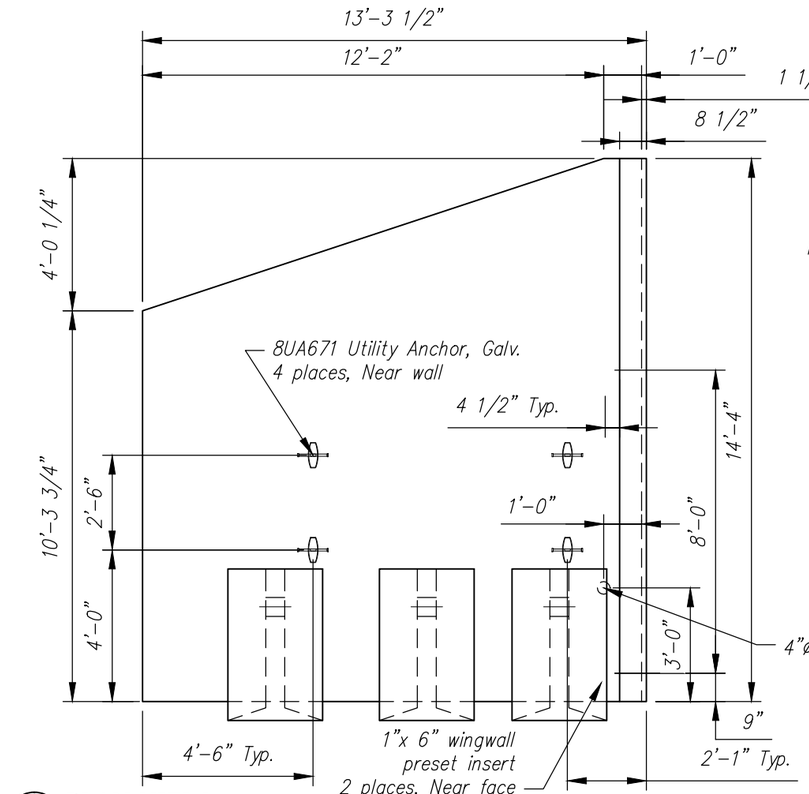

PLAN VIEW
Scale: N.T.S.

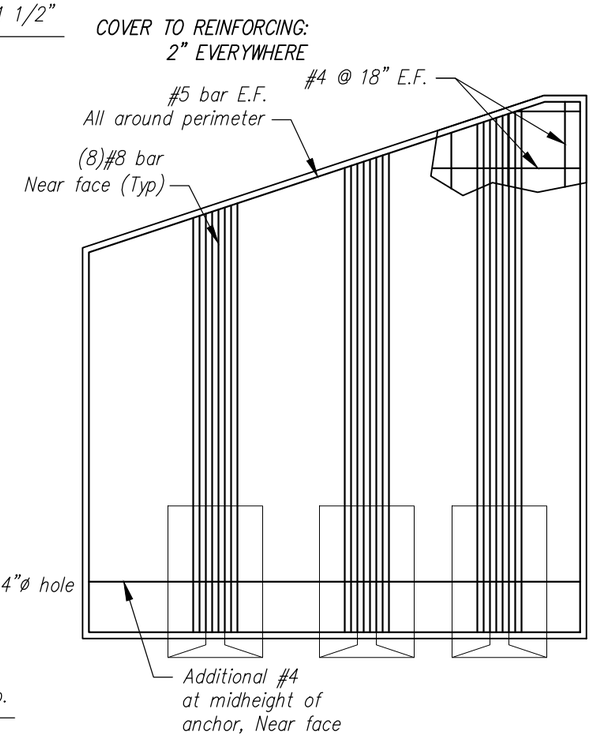

REINFORCING DETAIL
Scale: N.T.S.

WW3A WINGWALL - BILL OF MATERIALS / EMBEDS				
CSI ID#	DESCRIPTION	QTY	UM	COMMENTS
1 CSANC-F	CON/SPAN WINGWALL ANCHOR (F)	3	EA	
CT-00005	CONSOLIDECK SALTGUARD (SILANE SILOXANE)	0.98	GA	
EM-0005A	1" X 6 " PRESET WING INSERTS	2	EA	
EM-00034	4" FOAM CORE PVC	1	FT	
EM-00115	UTILITY ANCHOR #8UA671-GALVANIZED	4	EA	
RM-00013	REBAR #4 BLACK- GR 60	281	LB	
RM-00015	REBAR #5 BLACK-GR 60 40'	106	LB	
RM-00104	REBAR #8 BLACK-GR 60	897	LB	
MX-FA5000SC30	MIX DESIGN - FLY ASH 5000 SELF CONSOLIDATING	5.83	CY	

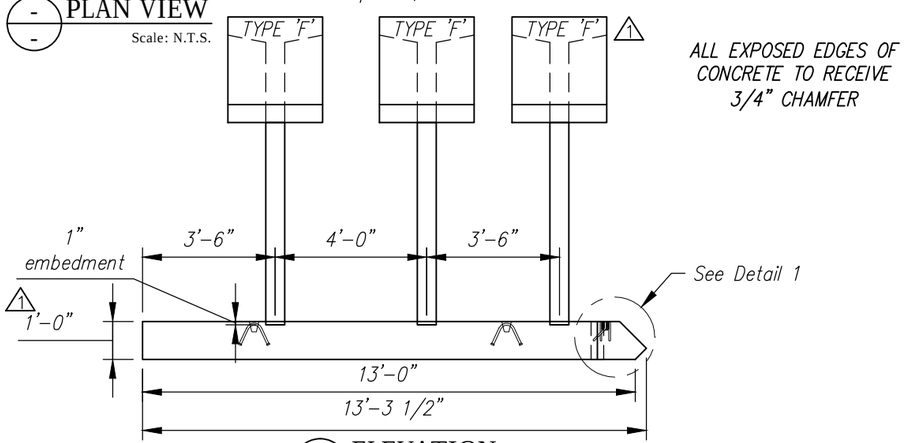

ELEVATION
Scale: N.T.S.

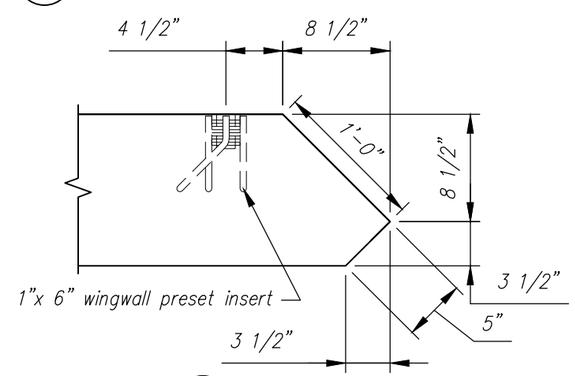

DETAIL 1
Scale: N.T.S.

Rev.	Date	DESCRIPTION	By
5			
4			
3			
2			
1	01APR2015	WW ANCHORS WERE TYPE 'D', WALL WAS 10" THK	RY

REVISIONS

Concrete Systems Inc.
9 Commercial St., Hudson, NH,03051
Phone 603-889-4163
Fax 603-889-2417

STATE AGENCY
VTrans Working to Get You There

Drawn By R. YEAGER	Date 12MAR2015
Concrete Cu. Yd. 7.90	Weight in Tons 16.00
Approved By	Date

J A MCDONALD, INC.
VT/AOT BRIDGE – STEEL CULVERT REPLACEMENT
BRIDGE #6, VT ROUTE 58, IRASBURG, VT

B | SHOP DRAWING – WW3A | REV 1
Drawing No. C22283-L01-WW3A
Quantity: 1 | Project No: STPCULV30 | SHEET 8 OF 13

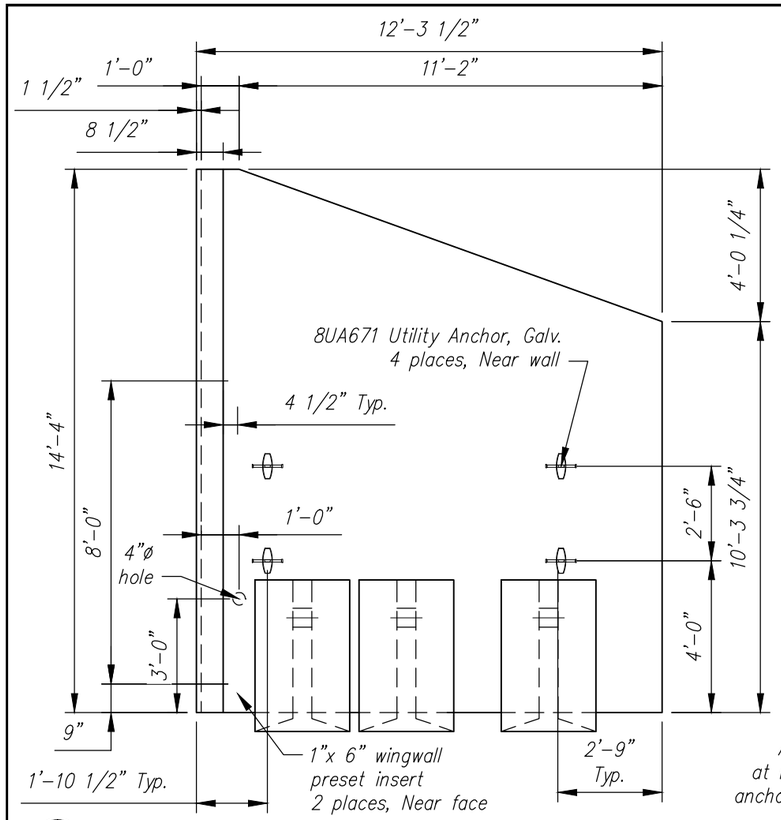

PLAN VIEW
Scale: N.T.S.

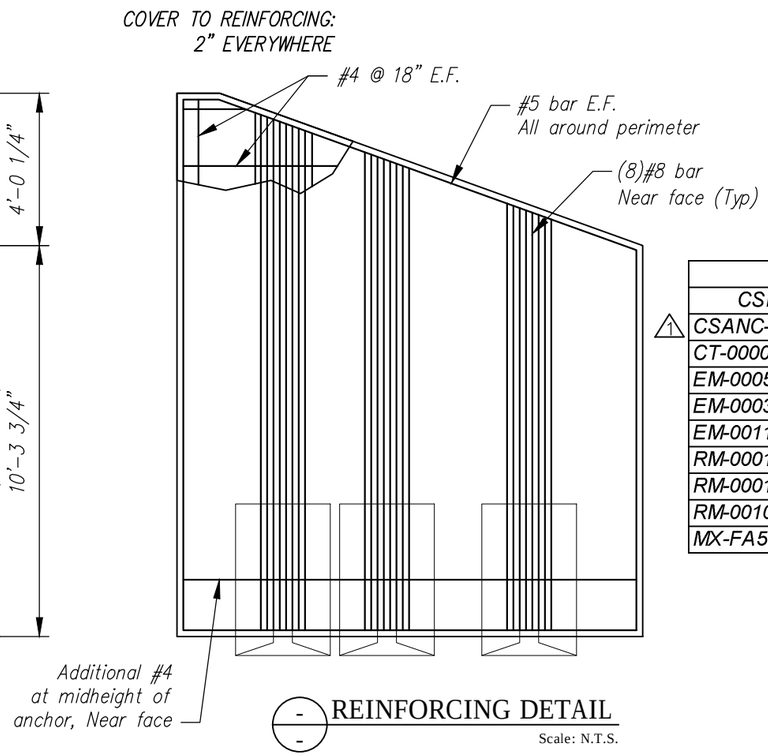

REINFORCING DETAIL
Scale: N.T.S.

WW4A WINGWALL - BILL OF MATERIALS / EMBEDS				
CSI ID#	DESCRIPTION	QTY	UM	COMMENTS
1 CSANC-F	CON/SPAN WINGWALL ANCHOR (F)	3	EA	
CT-00005	CONSOLIDECK SALTGUARD (SILANE SILOXANE)	0.95	GA	
EM-0005A	1" X 6 " PRESET WING INSERTS	2	EA	
EM-00034	4" FOAM CORE PVC	1	FT	
EM-00115	UTILITY ANCHOR #8UA671-GALVANIZED	4	EA	
RM-00013	REBAR #4 BLACK- GR 60	302	LB	
RM-00015	REBAR #5 BLACK-GR 60 40'	102	LB	
RM-00104	REBAR #8 BLACK-GR 60	897	LB	
MX-FA5000SC30	MIX DESIGN - FLY ASH 5000 SELF CONSOLIDATING	5.37	CY	

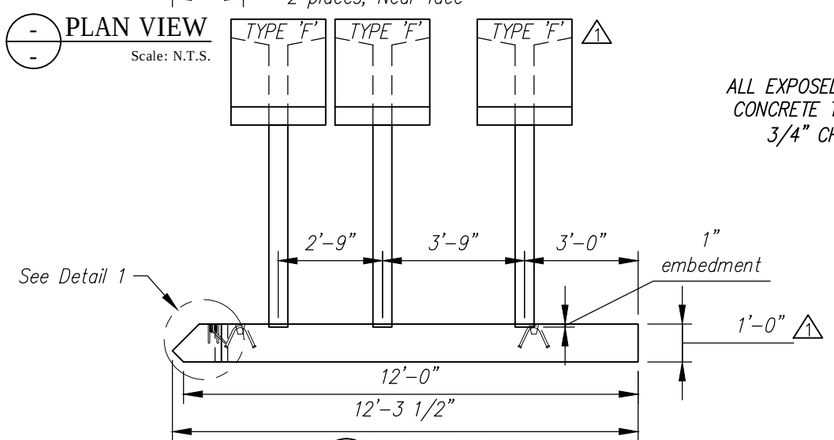

ELEVATION
Scale: N.T.S.

ALL EXPOSED EDGES OF
CONCRETE TO RECEIVE
3/4" CHAMFER

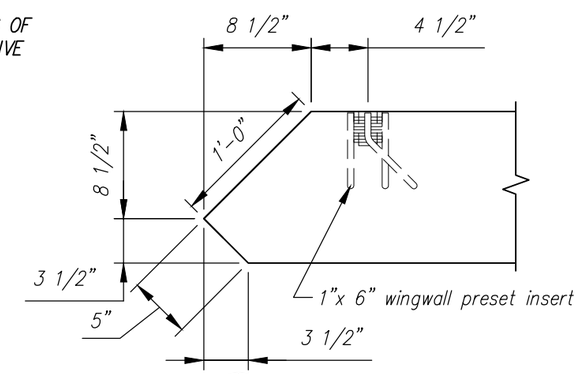

DETAIL 1
Scale: N.T.S.

Rev.	Date	DESCRIPTION	By
5			
4			
3			
2			
1	01APR2015	WW ANCHORS WERE TYPE 'D', WALL WAS 10" THK	RY

REVISIONS

Concrete Systems Inc.
9 Commercial St., Hudson, NH,03051
Phone 603-889-4163
Fax 603-889-2417

STATE AGENCY
VTrans Working to Get You There VERMONT AGENCY OF TRANSPORTATION

Drawn By R. YEAGER	Date 12MAR2015
Concrete Cu. Yd. 7.44	Weight in Tons 15.07
Approved By	Date

J A MCDONALD, INC.
VT/AOT BRIDGE – STEEL CULVERT REPLACEMENT
BRIDGE #6, VT ROUTE 58, IRASBURG, VT

B

SHOP DRAWING – WW4A

Drawing No. C22283–L01–WW4A

REV 1

Quantity: 1 | Project No: STPCULV30 | SHEET 9 OF 13

F1A FOOTING - BILL OF MATERIALS / EMBEDS				
CSI ID#	DESCRIPTION	QTY	UM	COMMENTS
EM-00115	UTILITY ANCHOR #8UA671-GALVANIZED	2	EA	
RM-00013	REBAR #4 BLACK- GR 60	63	LB	
RM-00017	REBAR #6 BLACK-GR 60 40'	186	LB	
MX-FA5000SC30	MIX DESIGN - FLY ASH 5000 SELF CONSOLIDATING	4.57	CY	

F1A Rebar Schedule				
MK		QTY	LENGTH	
401	#4	6	8 '- 0 "	
402	#4	4	11 '- 8 "	
601	#6	4	11 '- 6 "	
602	#6	6	13 '- 0 "	MAX

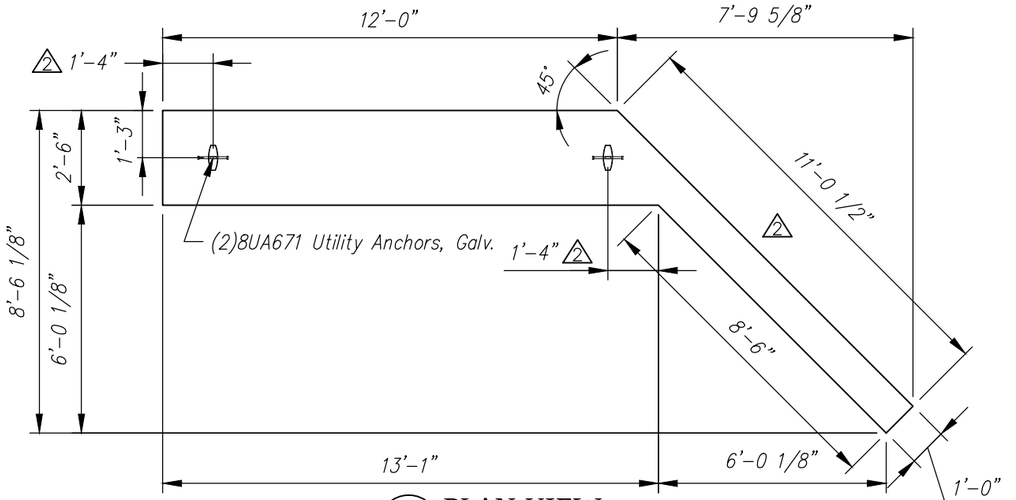

PLAN VIEW
Scale: N.T.S.

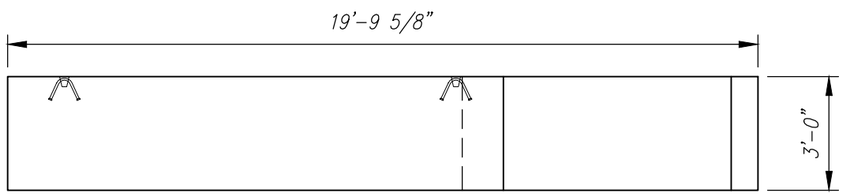

ELEVATION
Scale: N.T.S.

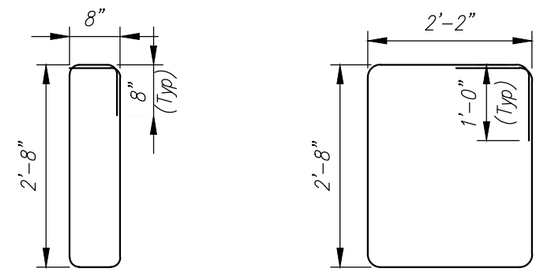

MK 401
#4 bar

MK 402
#4 bar

BENDING SCHEDULE
Scale: N.T.S.

Cover to reinforcing: 2" u.n.o.

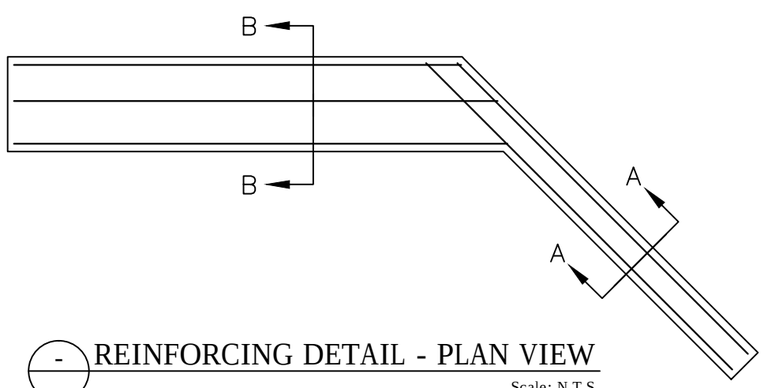

REINFORCING DETAIL - PLAN VIEW
Scale: N.T.S.

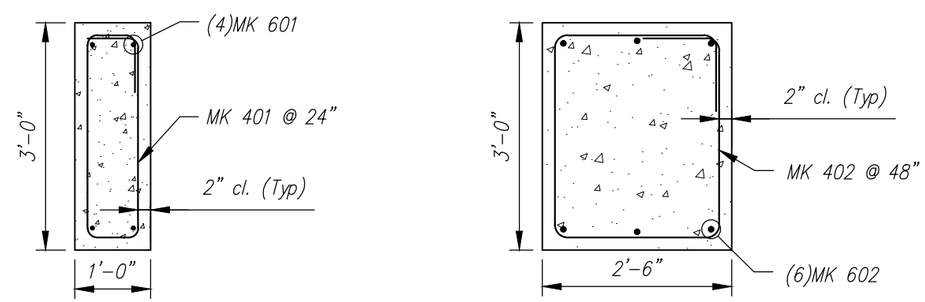

SECTION A–A

SECTION B–B

REINFORCING DETAIL
Scale: N.T.S.

Rev.	Date	DESCRIPTION	By
5			
4			
3			
2	28APR2015	REVISED UTILITY ANCHOR LOCATIONS	RY
1	01APR2015	DIMENSIONAL CHANGES DUE TO 12" THK WW	RY

REVISIONS

CSI
Concrete Systems Inc.
9 Commercial St., Hudson, NH,03051
Phone 603-889-4163
Fax 603-889-2417

STATE AGENCY
VTrans Working to Get You There VERMONT AGENCY OF TRANSPORTATION

Drawn By R. YEAGER	Date 12MAR2015
Concrete Cu. Yd. 4.57	Weight in Tons 9.25
Approved By	Date

J A MCDONALD, INC.
VT/AOT BRIDGE – STEEL CULVERT REPLACEMENT
BRIDGE #6, VT ROUTE 58, IRASBURG, VT

B

SHOP DRAWING – F1A

Drawing No. C22283–L01–F1A

REV 2

Quantity: 1 | Project No: STPCULV30 | SHEET 10 OF 13

F2A FOOTING - BILL OF MATERIALS / EMBEDS				
CSI ID#	DESCRIPTION	QTY	UM	COMMENTS
EM-00115	UTILITY ANCHOR #8UA671-GALVANIZED	2	EA	
RM-00013	REBAR #4 BLACK- GR 60	63	LB	
RM-00017	REBAR #6 BLACK-GR 60 40'	186	LB	
MX-FA5000SC30	MIX DESIGN - FLY ASH 5000 SELF CONSOLIDATING	4.57	CY	

F2A Rebar Schedule				
MK		QTY	LENGTH	
401	#4	6	8 '- 0 "	
402	#4	4	11 '- 8 "	
601	#6	4	11 '- 6 "	
602	#6	6	13 '- 0 "	MAX

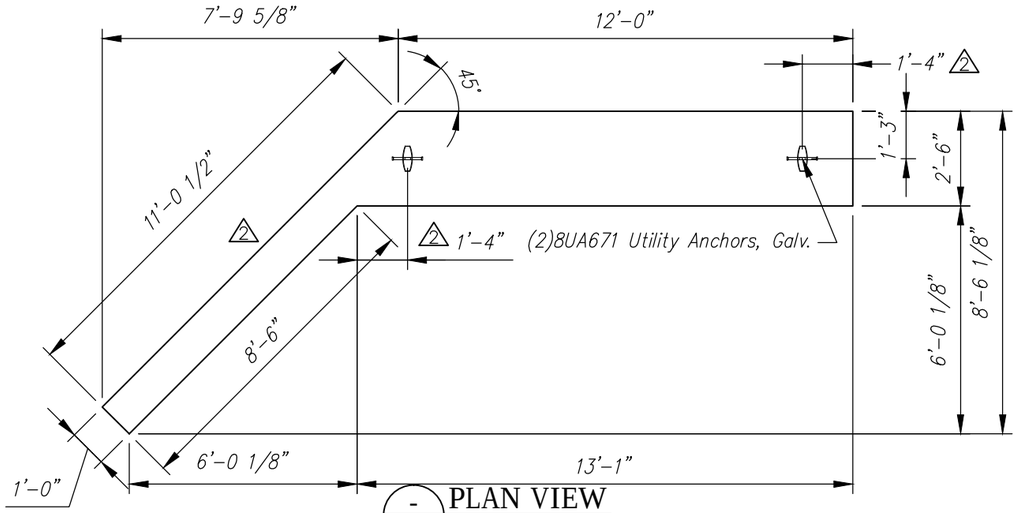

PLAN VIEW
Scale: N.T.S.

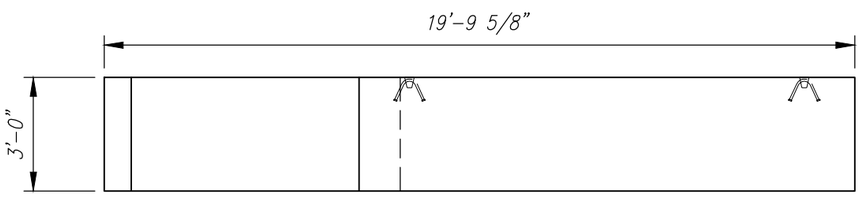

ELEVATION
Scale: N.T.S.

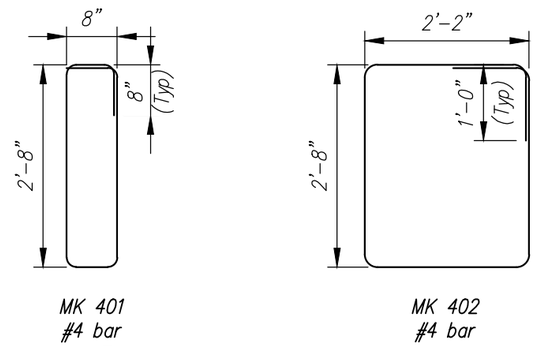

BENDING SCHEDULE
Scale: N.T.S.

Cover to reinforcing: 2" u.n.o.

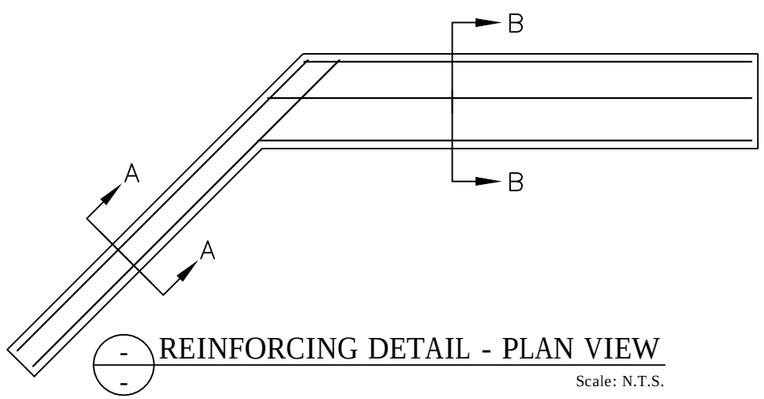

REINFORCING DETAIL - PLAN VIEW
Scale: N.T.S.

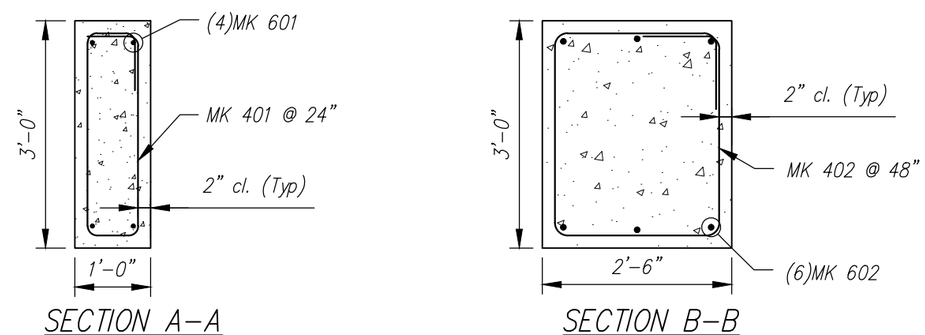

REINFORCING DETAIL
Scale: N.T.S.

Rev.	Date	DESCRIPTION	By
5			
4			
3			
2	28APR2015	REVISED UTILITY ANCHOR LOCATIONS	RY
1	01APR2015	DIMENSIONAL CHANGES DUE TO 12" THK WW	RY

REVISIONS

CSI
Concrete Systems Inc.
9 Commercial St., Hudson, NH,03051
Phone 603-889-4163
Fax 603-889-2417

STATE AGENCY
VTrans Working to Get You There VERMONT AGENCY OF TRANSPORTATION

Drawn By R. YEAGER	Date 12MAR2015
Concrete Cu. Yd. 4.57	Weight in Tons 9.25
Approved By	Date

J A MCDONALD, INC.
VT/AOT BRIDGE – STEEL CULVERT REPLACEMENT
BRIDGE #6, VT ROUTE 58, IRASBURG, VT

B

SHOP DRAWING – F2A

Drawing No. C22283-L01-F2A

REV 2

Quantity: 1 | Project No: STPCULV30 | SHEET 11 OF 13

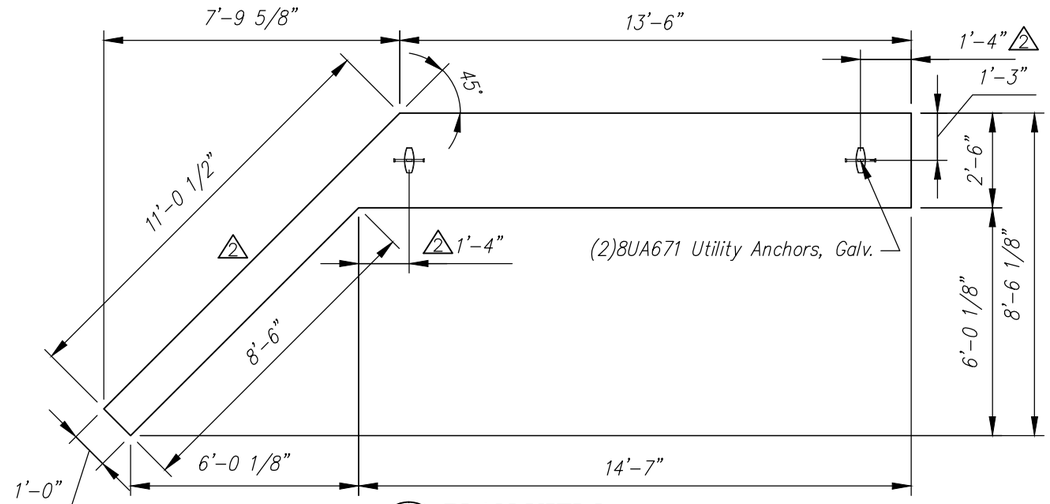

PLAN VIEW
Scale: N.T.S.

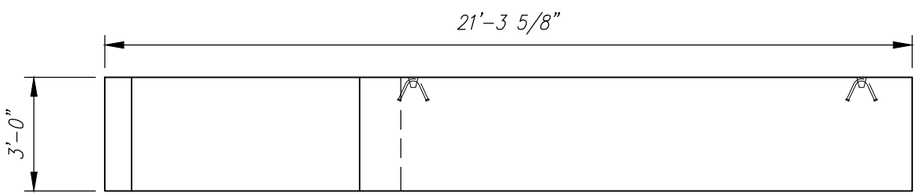

ELEVATION
Scale: N.T.S.

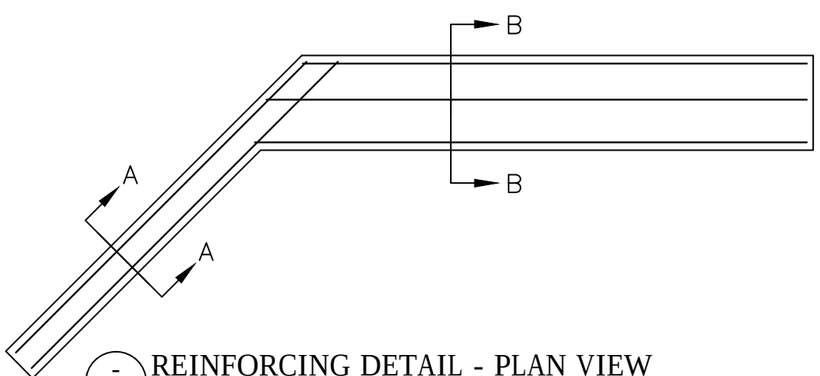

REINFORCING DETAIL - PLAN VIEW
Scale: N.T.S.

F3A FOOTING - BILL OF MATERIALS / EMBEDS				
CSI ID#	DESCRIPTION	QTY	UM	COMMENTS
EM-00115	UTILITY ANCHOR #8UA671-GALVANIZED	2	EA	
RM-00013	REBAR #4 BLACK- GR 60	63	LB	
RM-00017	REBAR #6 BLACK-GR 60 40'	201	LB	
MX-FA5000SC30	MIX DESIGN - FLY ASH 5000 SELF CONSOLIDATING	4.99	CY	

F3A Rebar Schedule				
MK		QTY	LENGTH	
401	#4	6	8 '- 0 "	
402	#4	4	11 '- 7 "	
601	#6	4	11 '- 6 "	
602	#6	6	14 '- 7 "	MAX

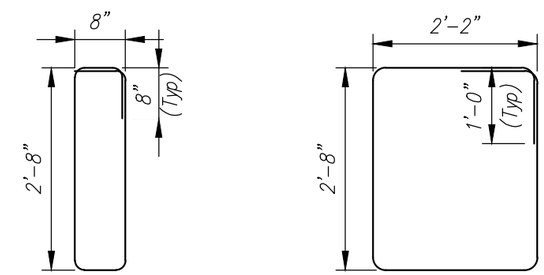

MK 401
#4 bar

MK 402
#4 bar

BENDING SCHEDULE
Scale: N.T.S.

Cover to reinforcing: 2" u.n.o.

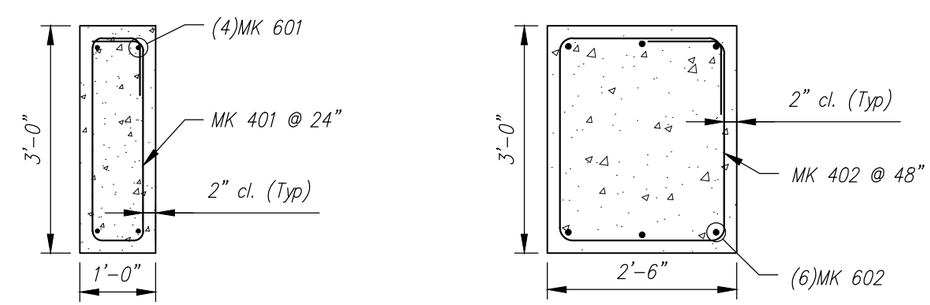

SECTION A-A

SECTION B-B

REINFORCING DETAIL
Scale: N.T.S.

Rev.	Date	DESCRIPTION	By
5			
4			
3			
2	28APR2015	REVISED UTILITY ANCHOR LOCATIONS	RY
1	01APR2015	DIMENSIONAL CHANGES DUE TO 12" THK WW	RY

REVISIONS

Concrete Systems Inc.
9 Commercial St., Hudson, NH,03051
Phone 603-889-4163
Fax 603-889-2417

STATE AGENCY

VTrans Working to Get You There VERMONT AGENCY OF TRANSPORTATION

J A MCDONALD, INC.
VT/AOT BRIDGE – STEEL CULVERT REPLACEMENT
BRIDGE #6, VT ROUTE 58, IRASBURG, VT

Drawn By R. YEAGER	Date 12MAR2015	B	SHOP DRAWING – F3A
Concrete Cu. Yd. 4.99	Weight in Tons 10.10		Drawing No. C22283-L01-F3A
Approved By	Date	Quantity: 1	Project No: STPCULV30

REV 2

SHEET 12 OF 13

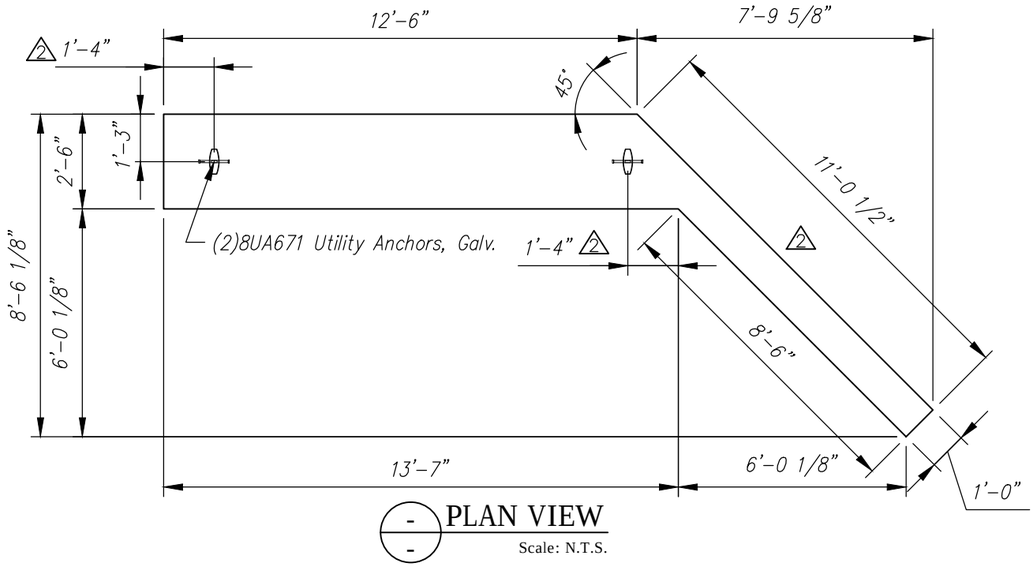

PLAN VIEW
Scale: N.T.S.

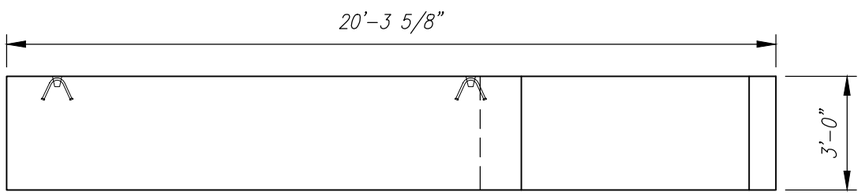

ELEVATION
Scale: N.T.S.

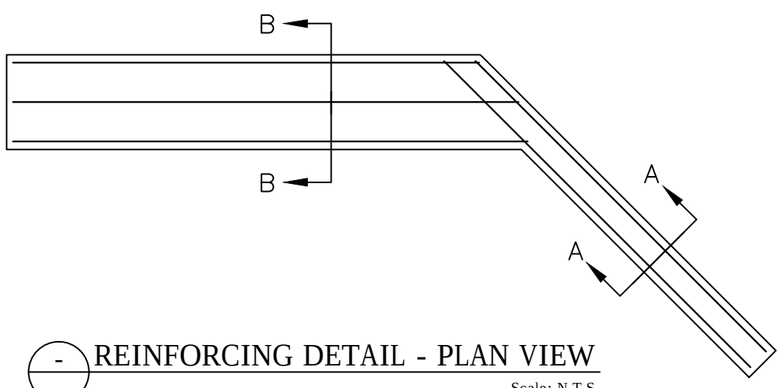

REINFORCING DETAIL - PLAN VIEW
Scale: N.T.S.

F4A FOOTING - BILL OF MATERIALS / EMBEDS				
CSI ID#	DESCRIPTION	QTY	UM	COMMENTS
EM-00115	UTILITY ANCHOR #8UA671-GALVANIZED	2	EA	
RM-00013	REBAR #4 BLACK- GR 60	63	LB	
RM-00017	REBAR #6 BLACK-GR 60 40'	192	LB	
MX-FA5000SC30	MIX DESIGN - FLY ASH 5000 SELF CONSOLIDATING	4.71	CY	

F4A Rebar Schedule				
MK		QTY	LENGTH	
401	#4	6	8 '- 0 "	
402	#4	4	11 '- 7 "	
601	#6	4	11 '- 6 "	
602	#6	6	13 '- 7 "	MAX

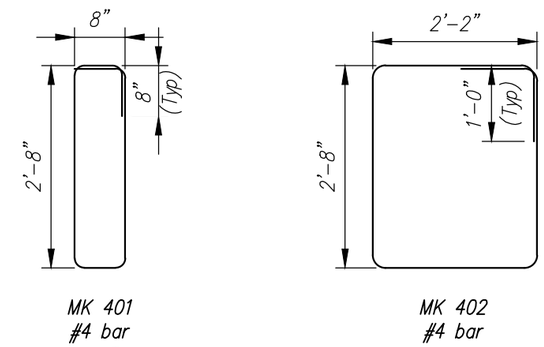

BENDING SCHEDULE
Scale: N.T.S.

Cover to reinforcing: 2" u.n.o.

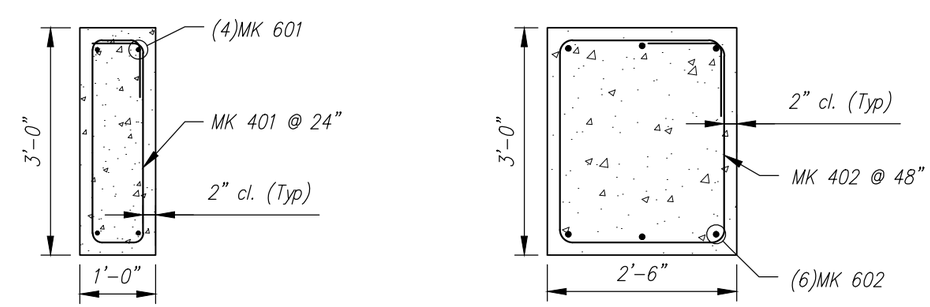

REINFORCING DETAIL
Scale: N.T.S.

Rev.	Date	DESCRIPTION	By
5			
4			
3			
2	28APR2015	REVISED UTILITY ANCHOR LOCATIONS	RY
1	01APR2015	DIMENSIONAL CHANGES DUE TO 12" THK WW	RY

REVISIONS

CSI Concrete Systems Inc.
9 Commercial St., Hudson, NH,03051
Phone 603-889-4163
Fax 603-889-2417

STATE AGENCY
VTrans Working to Get You There VERMONT AGENCY OF TRANSPORTATION

Drawn By R. YEAGER	Date 12MAR2015
Concrete Cu. Yd. 4.71	Weight in Tons 9.54
Approved By	Date

J A MCDONALD, INC.
VT/AOT BRIDGE – STEEL CULVERT REPLACEMENT
BRIDGE #6, VT ROUTE 58, IRASBURG, VT

B — SHOP DRAWING – F4A — REV 2
Drawing No. C22283-L01-F4A
Quantity: 1 | Project No: STPCULV30 | SHEET 13 OF 13

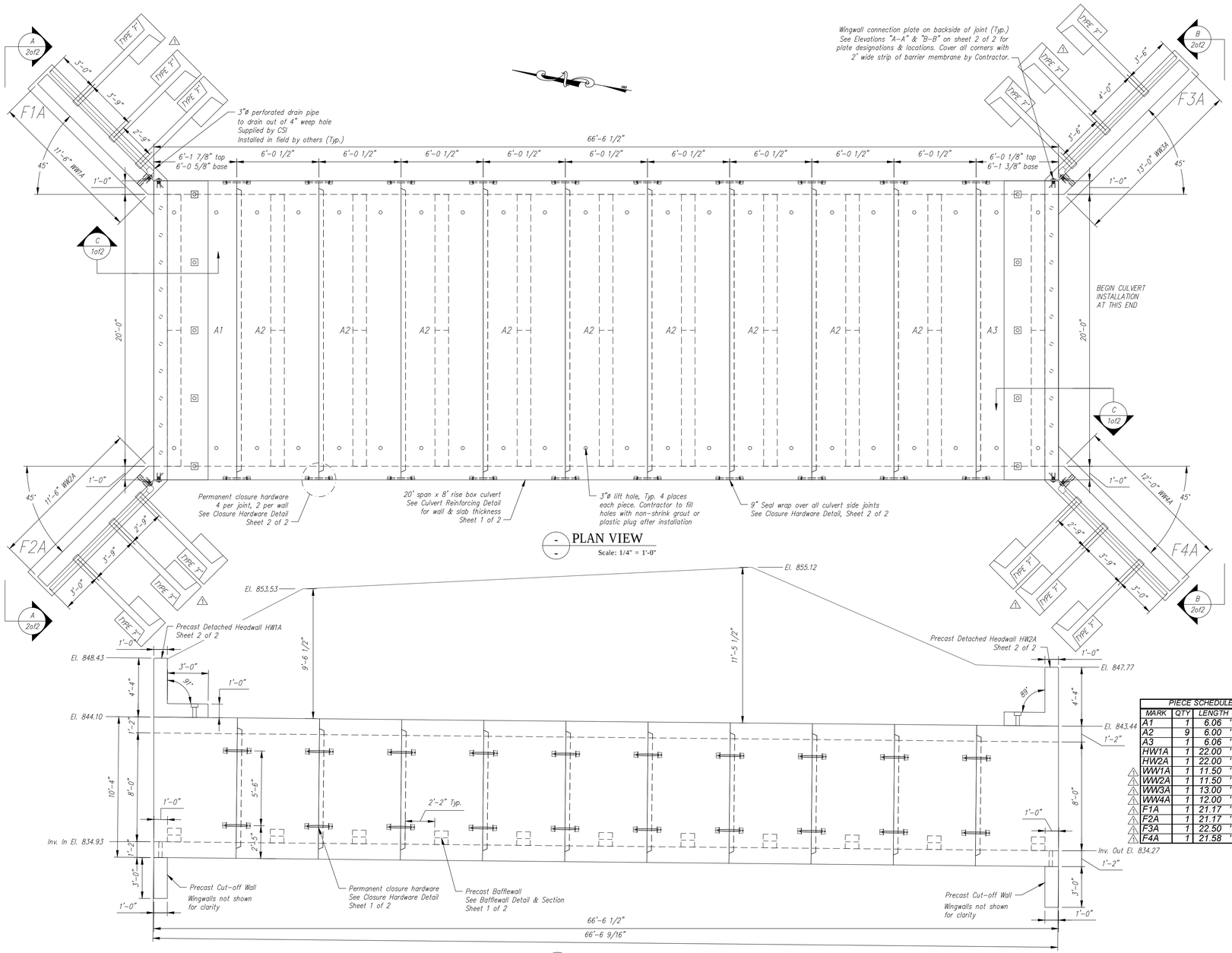

WINGWALL GENERAL NOTES:

1. Reference standard:
   AASHTO LRFD Specifications
2. Design Parameters:
   Soil Bearing: 4300 psf
   Earth Cover: 5' to 7.5'
   Concrete: Design strength f'c = 5000 psi
   Unit weight = 150 pcf
   Reinforcing: ASTM A615 (rebar), grade 60, Black
   Soil: Unit weight = 140 pcf
   Minimum lateral pressure coefficient .25
   Maximum lateral pressure coefficient .50
   Cover to reinforcing: 2" u.n.o.
3. The wingwalls have been designed for general site conditions. The project engineer shall be responsible for the structure's suitability to the existing site conditions and for the hydraulic evaluation, including scour and confirmation of soil conditions.
4. Prior to construction, contractor must verify all elevations shown through the engineer.

GENERAL NOTES:

1. Reference Standards:
   AASHTO "LRFD Bridge Design Specifications"
   ASTM C1577
2. Design Parameters:
   Live load: HL-93
   Earth Cover: 9' to 12'
   Concrete: Design strength f'c = 5000 psi
   Unit weight = 150 pcf
   Reinforcing: ASTM A615 (rebar) GR 60, Black
   Soil: Unit weight = 140 pcf
   Minimum lateral pressure coefficient .25
   Maximum lateral pressure coefficient .50
   Cover to reinforcing: 2" headwalls
   1 1/2" elsewhere u.n.o.
3. Dimensions include a joint gap. Actual culvert piece length is ½" shorter (i.e. A2 = 6'-0").
4. No dampproofing or waterproofing supplied by CSI.
5. DBS are Dowel Bar Splicers and DI are Dowel Ins. Both are supplied by CSI. DI's are to be installed and cut/bent in the field by others as required.
6. Headwalls are not designed for impact load.
7. Water repellant (Silxane Siloxane) by CSI on all exposed faces of culvert, headwalls, and wingwalls to 1' inside culvert ends.
8. Baffle wall details taken from Sheet 12 of 55 of the contract drawings.

PIECE SCHEDULE (MX-FA5000SC30)					
MARK	QTY	LENGTH	YDS	WEIGHT	
A1	1	6.06 '	16.08	32.56	TONS
A2	9	6.00 '	15.70	31.79	TONS
A3	1	6.06 '	15.62	31.63	TONS
HW1A	1	22.00 '	5.98	12.11	TONS
HW2A	1	22.00 '	5.98	12.11	TONS
WW1A	1	11.50 '	7.09	14.36	TONS
WW2A	1	11.50 '	7.09	14.36	TONS
WW3A	1	13.00 '	7.90	16.00	TONS
WW4A	1	12.00 '	7.44	15.07	TONS
F1A	1	21.17 '	4.57	9.25	TONS
F2A	1	21.17 '	4.57	9.25	TONS
F3A	1	22.50 '	4.99	10.10	TONS
F4A	1	21.58 '	4.71	9.54	TONS

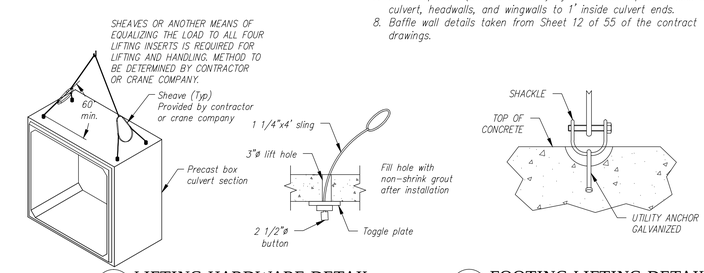

LIFTING HARDWARE DETAIL
Scale: N.T.S.

FOOTING LIFTING DETAIL
Scale: N.T.S.

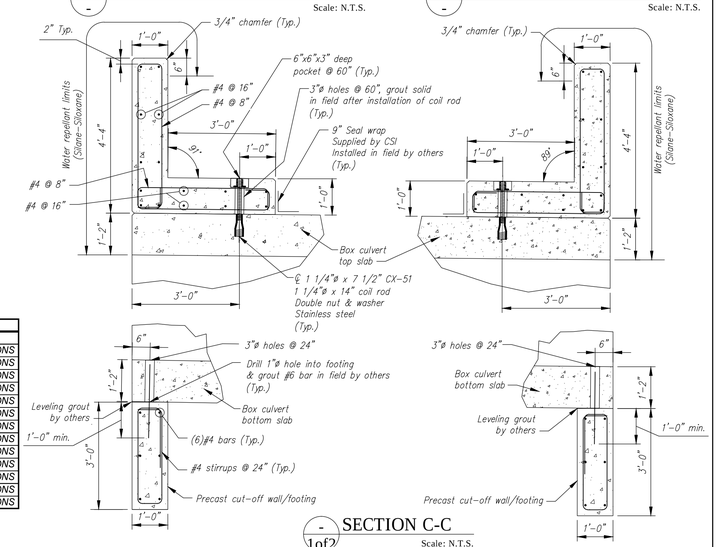

SECTION C-C
Scale: N.T.S.

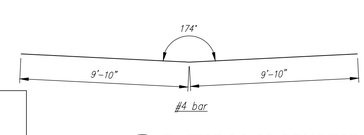

BAFFLE WALL BENDING SCHEDULE
Scale: N.T.S.

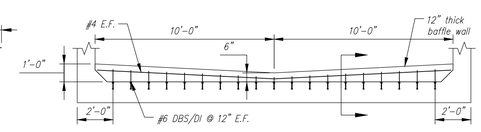

BAFFLE WALL DETAIL
Scale: N.T.S.

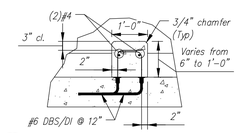

BAFFLE WALL SECTION
Scale: N.T.S.

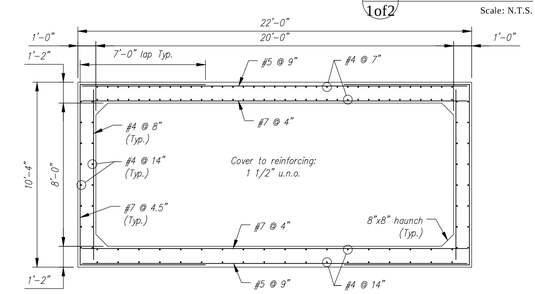

CULVERT REINFORCING DETAIL
Scale: 3/8" = 1'-0"

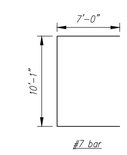

BENDING SCHEDULE
Scale: N.T.S.

Contractor is to verify that all information shown on drawings has been thoroughly checked, complies with the contract documents and is adequate to meet the field conditions. Some dimensions and details may differ slightly from contract drawings to accommodate the manufacturing or design process. Approval of this drawing indicates that any deviation from the contract documents has been reviewed and found to be acceptable. Production will not commence until receipt of signed, approved shop drawings.

This drawing contains information proprietary to CONCRETE SYSTEMS, INC. This drawing is disclosed with the understanding that it will be retained in confidence and its use limited solely to the purpose for which it is disclosed. It is understood that no reproduction of this drawing is authorized without permission from CONCRETE SYSTEMS, INC. and that it will be returned to CONCRETE SYSTEMS, INC. upon request.

Stamp for structural design only

Rev.	Date	DESCRIPTION	By
5			
4			
3			
2			
1	01APR2015	CONSPAN WW ANCHORS WERE TYPE 'D', WWs WERE 10" THK, WW & FTG WEIGHTS UPDATED	RY

REVISIONS

This drawing is based upon information provided from the following documents and/or sources:

Engineer: STATE OF VT AOT PROGRAM DEVELOPMENT
Project No: STPCULV30
Drawings: VT/AOT PROPOSED INPROVEMENT BRIDGE PROJECT
SHEETS 1 THRU 24 & 32 OF 55
Specifications: ----

Other Sources: ----

Concrete Systems Inc.
9 Commercial St., Hudson, NH,03051
Phone 603-889-4163
Fax 603-889-2417

STATE AGENCY
VTrans Working to Get You There

Drawn By: R. YEAGER — Date: 09MAR2015
Reviewed By: B. KOLAWOLE — Date: 02APR2015
Approved By — Date

J A MCDONALD, INC.
VT/AOT BRIDGE – STEEL CULVERT REPLACEMENT
BRIDGE #6, VT ROUTE 58, IRASBURG, VT

D — 20' SPAN x 8' RISE BOX CULVERT LAYOUT
Drawing No. C22283-L01A
REV 1
Quantity: 1 — Project No: STPCULV30 — SHEET 1A OF 2A

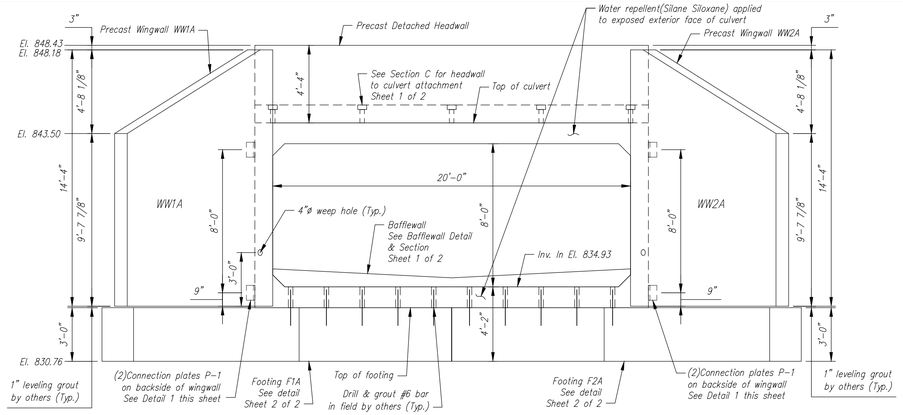

ELEVATION A-A
Scale: 1/4" = 1'-0"

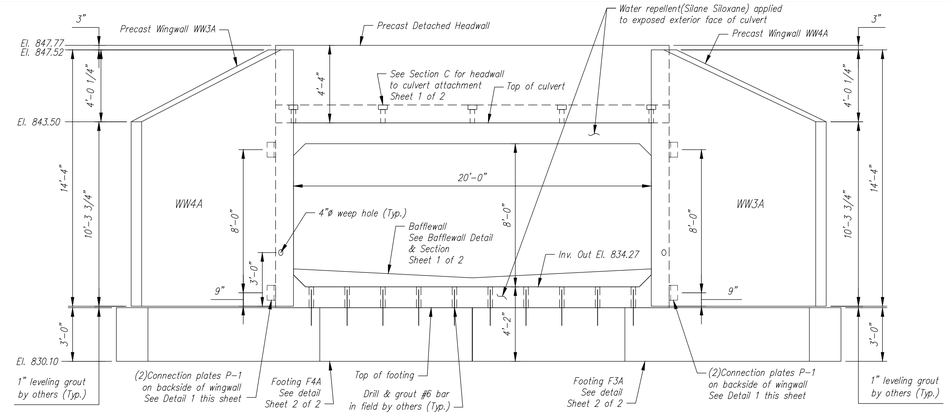

ELEVATION B-B
Scale: 1/4" = 1'-0"

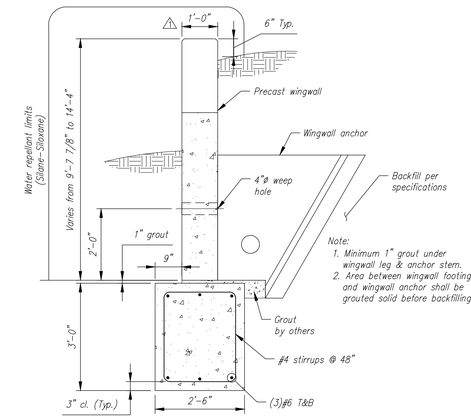

TYPICAL WINGWALL SECTION
Scale: N.T.S.

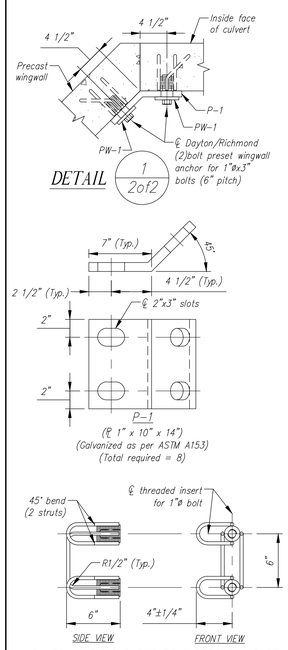

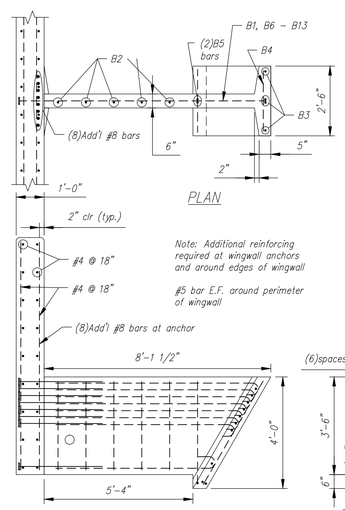

Note: Additional reinforcing required at wingwall anchors and around edges of wingwall

#5 bar E.F. around perimeter of wingwall

BAR LIST

MARK	QTY.	SIZE	a	TYPE	LENGTH
B1	8	#6	3'-0"	3	——
B2	4	#5	——	Str.	3'-2"
B3	4	#5	——	Str.	4'-3"
B4	11	#5	——	Str.	2'-2"
B5	2	#5	3'-8"	2	——
B6	1	#5	6'-2"	1	——
B7	1	#5	6'-9"	1	——
B8	1	#5	6'-11"	1	——
B9	1	#5	7'-1"	1	——
B10	1	#5	7'-3"	1	——
B11	1	#5	7'-5"	1	——
B12	1	#5	7'-6"	1	——
B13	1	#5	7'-8"	1	——

Note: "Str." denotes straight bar. Standard clearance = 2"

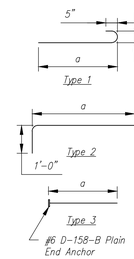

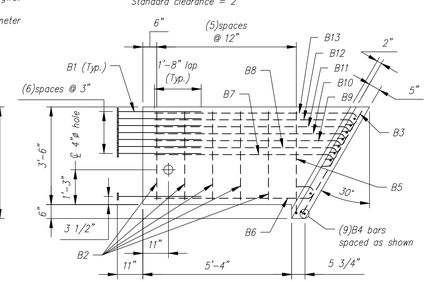

PRECAST ANCHOR TYPE F ⚠

BACKFILL DESCRIPTION

Group Classification	A-1		A-3	A-2			
	A-1-a	A-1-b		A-2-4	A-2-5	A-2-6	A-2-7
Sieve Analysis, Percent Passing							
No. 10	50 max.						
No. 40	30 max.	50 max.	51 min.				
No. 200	15 max.	25 max.	10 max.	35 max.	35 max.	35 max.	35 max.
Characteristics of Fraction Passing No. 40							
Liquid Limit				40 max.	41 min.	40 max.	41 min.
Plasticity Index	6 max.		N.P.	10 max.	10 max.	11 min.	11 min.
Usual Types of Significant Constituent Materials	Stone Fragments, Gravel & Sand		Fine Sand	Silty or Clayey Gravel and Sand			
General Rating as Subgrade	Excellent to Good						

NOTES
1. BACKFILLING OPERATIONS WITHIN THE C.B.Z. SHALL BE PERFORMED IN LIFTS OF 8" OR LESS (LOOSE DEPTH).
2. MAXIMUM DRY DENSITY SHALL BE DETERMINED BY AASHTO T-99 OR OTHER APPROVED METHODS.
3. BACKFILL SHALL BE COMPACTED IN LAYERS UNTIL THE DENSITY IS NOT LESS THAN 95% OF THE MAXIMUM DRY DENSITY.

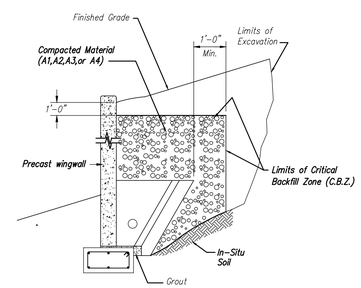

WINGWALL BACKFILL REQUIREMENTS

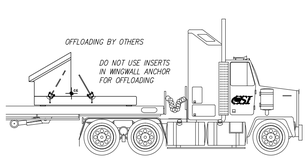

WINGWALL OFFLOADING & TRIPPING DETAIL
Scale: N.T.S.

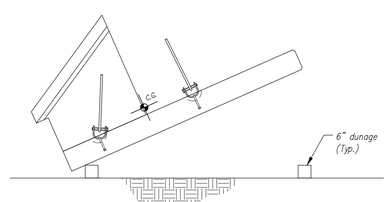

WINGWALL LIFTING DETAIL
Scale: N.T.S.

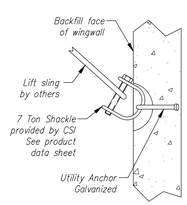

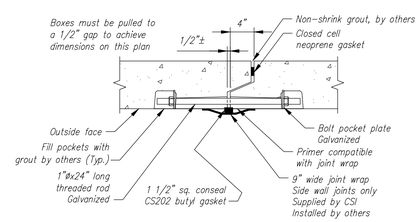

CLOSURE HARDWARE DETAIL
Scale: N.T.S.

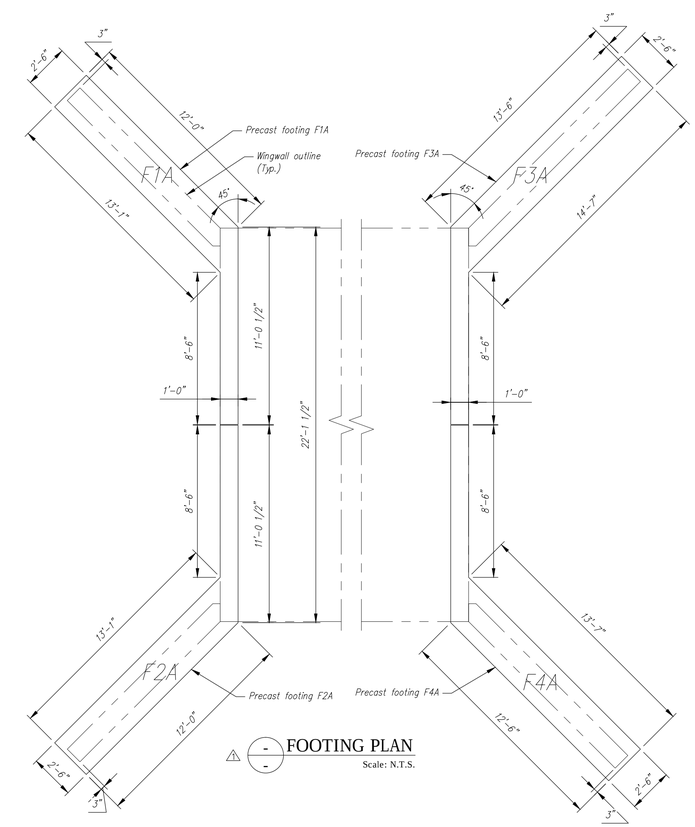

FOOTING PLAN ⚠
Scale: N.T.S.

Contractor is to verify that all information shown on drawings has been thoroughly checked, complies with the contract documents and is adequate to meet the field conditions. Some dimensions and details may differ slightly from contract drawings to accommodate the manufacturing or design process. Approval of this drawing indicates that any deviation from the contract documents has been reviewed and found to be acceptable. Production will not commence until receipt of signed, approved shop drawings.

This drawing contains information proprietary to CONCRETE SYSTEMS, INC. This drawing is disclosed with the understanding that it will be retained in confidence and its use limited solely to the purpose for which it is disclosed. It is understood that no reproduction of this drawing is authorized without permission from CONCRETE SYSTEMS, INC. and that it will be returned to CONCRETE SYSTEMS, INC. upon request.

Stamp for structural design only

Rev.	Date	DESCRIPTION	By
5			
4			
3			
2			
1	01APR2015	CONSPAN WW ANCHORS WERE TYPE 'D', WWs WERE 10" THK, WW & FTG WEIGHTS UPDATED	RY

REVISIONS

This drawing is based upon information provided from the following documents and/or sources:
Engineer: STATE OF VT AOT PROGRAM DEVELOPMENT
Project No: STPCULV30
Drawings: VT/AOT PROPOSED INPROVEMENT BRIDGE PROJECT SHEETS 1 THRU 24 & 32 OF 55
Specifications: ----

Other Sources: ----

Concrete Systems Inc.
9 Commercial St., Hudson, NH,03051
Phone 603-889-4163
Fax 603-889-2417

STATE AGENCY
VTrans Working to Get You There www.aot.state.vt.us

Drawn By R. YEAGER	Date 09MAR2015	
Reviewed By B. KOLAWOLE	Date 02APR2015	
Approved By	Date	

J A MCDONALD, INC.
VT/AOT BRIDGE – STEEL CULVERT REPLACEMENT
BRIDGE #6, VT ROUTE 58, IRASBURG, VT

D — 20' SPAN X 8' RISE BOX CULVERT LAYOUT — REV 1
Drawing No. C22283-L01B
Quantity: 1 | Project No: STPCULV30 | SHEET 2A OF 2A