VT ROUTE 58 BOX CULVERT
J.A. McDONALD, INC.
IRASBURG, VT

LIFTING CALCULATIONS
BOX CULVERT UNITS
CSI JOB# C22283

Concrete Systems, Inc
9 Commercial Street
Hudson. NH 03051
(603) 889-4163

LIFTING WEIGHT:

$W_{piece} := 34\ tonf$ maximum panal weight $No_{inserts} := 4$

$SALF := 1.16$ sling angle load factor at 60 deg

$W_{effective} := SALF \cdot 1.0 \cdot W_{piece} = (7.888 \cdot 10^4)\ lbf$ 100% lifting weght

LIFT HOLE CAPACITY:

$f_c := 5000$ psi $\phi := 1$ $t := 14\ in$ slab thickness

$d_h := 3\ in$ diameter of hole $K := 4$ mix design constant

$$A_c := 4.44288 \cdot t \cdot (t + d_h) = (1.057 \cdot 10^3)\ in^2$$

$$P_{concrete} := \frac{\phi \cdot A_c \cdot K \cdot \sqrt{f_c} \cdot \frac{lbf}{in^2}}{\sqrt{2}} = (2.115 \cdot 10^5)\ lbf$$

$$LiftCap := P_{concrete} \cdot No_{inserts} = (8.459 \cdot 10^5)\ lbf$$

SAFETY FACTOR:

$$SF := \frac{LiftCap}{W_{effective}} = 10.724$$

$$Check := \begin{cases} \text{if } SF \geq 4 \\ \quad \text{"OK"} \\ \text{else} \\ \quad \text{"No Good"} \end{cases} = \text{"OK"}$$

STATE OF VERMONT
CHRISTOPHER M. VICK
NO. 77928
Structural
LICENSED
PROFESSIONAL ENGINEER

4/28/15

04/28/2015

FieldLift.mcdx

Concrete Systems, Inc
9 Commercial Street
Hudson. NH 03051
(603) 889-4163

LIFT INSERT CAPACITY CALCULATIONS

$W := 12.11\ tonf$ maximum piece weight $No_{inserts} := 2$

Field Lift Condition: Dayton 8UA671 Utility Anchor

$SALF := 1.16$ sling angle load factor at 60 deg

$CSAF := 1.12$ concrete stregth adjustment factor 4000psi to 5000psi

$W_{effective} := SALF \cdot 1.0 \cdot W = (2.81 \cdot 10^4)\ lbf$ 100% lifting weght

$Allow_{4000} := 18850\ lbf$

$Allow_{5000} := Allow_{4000} \cdot CSAF = (2.111 \cdot 10^4)\ lbf$ allowable safe working load per insert at 5000 psi

$LiftCap := Allow_{5000} \cdot No_{inserts} = (4.222 \cdot 10^4)\ lbf$

$$SF := \frac{LiftCap \cdot 4}{W_{effective}} = 6.012$$

STATE OF VERMONT
CHRISTOPHER M. VICK
NO. 77928
Structural
LICENSED
PROFESSIONAL ENGINEER

4/28/15

04/28/2015

Concrete Systems, Inc
9 Commercial Street
Hudson. NH 03051
(603) 889-4163

LIFT INSERT CAPACITY CALCULATIONS

$W := 16\ tonf$ maximum piece weight $No_{inserts} := 2$

Field Lift Condition: Dayton 8UA671 Utility Anchor

$SALF := 1.16$ sling angle load factor at 60 deg

$CSAF := 1.12$ concrete stregth adjustment factor 4000psi to 5000psi

$W_{effective} := SALF \cdot 1.0 \cdot W = (3.712 \cdot 10^4)\ lbf$ 100% lifting weght

$Allow_{4000} := 18850\ lbf$

$Allow_{5000} := Allow_{4000} \cdot CSAF = (2.111 \cdot 10^4)\ lbf$ allowable safe working load per insert at 5000 psi

$LiftCap := Allow_{5000} \cdot No_{inserts} = (4.222 \cdot 10^4)\ lbf$

$$SF := \frac{LiftCap \cdot 4}{W_{effective}} = 4.55$$

STATE OF VERMONT
CHRISTOPHER M. VICK
NO. 77928
Structural
LICENSED
PROFESSIONAL ENGINEER

4/28/15

Concrete Systems, Inc
9 Commercial Street
Hudson. NH 03051
(603) 889-4163

LIFT INSERT CAPACITY CALCULATIONS

$W := 10.1\ tonf$ maximum piece weight $No_{inserts} := 2$

Field Lift Condition: Dayton 8UA671 Utility Anchor

$SALF := 1.16$ sling angle load factor at 60 deg

$CSAF := 1.12$ concrete stregth adjustment factor 4000psi to 5000psi

$W_{effective} := SALF \cdot 1.0 \cdot W = (2.343 \cdot 10^4)\ lbf$ 100% lifting weght

$Allow_{4000} := 10830\ lbf$

$Allow_{5000} := Allow_{4000} \cdot CSAF = (1.213 \cdot 10^4)\ lbf$ allowable safe working load per insert at 5000 psi

$LiftCap := Allow_{5000} \cdot No_{inserts} = (2.426 \cdot 10^4)\ lbf$

$$SF := \frac{LiftCap \cdot 4}{W_{effective}} = 4.141$$

STATE OF VERMONT
CHRISTOPHER M. VICK
NO. 77928
Structural
LICENSED
PROFESSIONAL ENGINEER
4/28/15

04/28/2015

P-75 AND P-75-H UTILITY ANCHOR

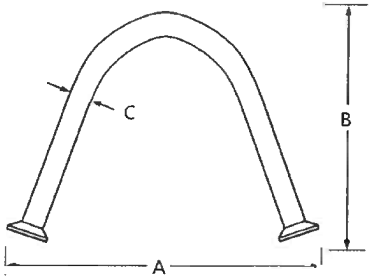

P-75 Utility Anchor

The Dayton Superior Utility Anchors are available in three diameters and a series of lengths for specific concrete thickness. The utility anchor can be set in either a 90° or a 45° anchor orientation using the appropriate setting plug.

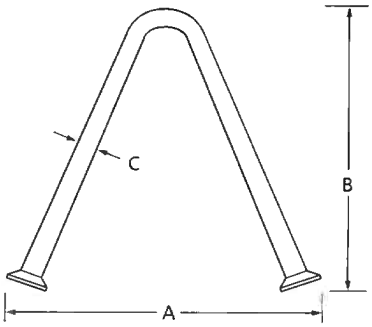

P-75-H Utility Anchor

To Order:
Specify: (1) quantity, (2) name, (3) product code.

Example:
200, P-75 Utility Anchors, 5UA444.

P-75 and P-75-H Utility Anchor							
Anchor	Type	Product Code No.	A	B	C	End Shape	Minimum Edge Distance
P-75	4UA444	121877	5-1/4"	3-1/8"	0.444"	Swift Lift	9"
	5UA444	123442	6"	3-3/4"	0.444"	Swift Lift	11"
	6UA444	121888	7-3/8"	4-3/4"	0.444"	Swift Lift	15"
	5UA671	123441	6 7/16"	3-3/4"	0.671"	Swift Lift	11"
	6UA671	121889	7-3/8"	4-3/4"	0.671"	Swift Lift	15"
	8UA671	121891	9-3/4"	6-3/4"	0.671"	Swift Lift	20"
P-75-H	12UA875	124738	15-7/8"	11"	0.875"	Swift Lift	30"

Anchor	Type	Product Code No.	Minimum Panel Thickness	Safe Working Load Tension 90	Safe Working Load Shear 90	Safe Working Load Tension/Shear 45	Edge Distance
P-75	4UA444	121877	4"	3,200	5,800	**2,260**	9"
	5UA444	123442	5"	3,860	7,710	**2,730**	10"
	6UA444	121888	5 5/8"	4,460	9,460	**3,150**	12"
	5UA671	123441	5"	4,560	8,430	**3,220**	10"
	6UA671	121889	5 5/8"	7,320	15,780	**5,170**	12"
	8UA671	121891	7 5/8"	10,830	18,850	**7,660**	16"
P-75-H	12UA875	124738	12"	24,000	---	24,000	---

Safe Working Loads are based on 4:1 safety factors in 4000 psi concrete

Note:
1) Compressive strength of normal weight concrete to be 4,000 psi at time of initial lift.
2) Safe working loads provide an approximate factor of safety of 4 to 1.
3) Utility anchors to be installed at 90° to surface of the concrete.
4) Shear safe working loads are based on loading in the direction of the top of the precast concrete element.

Refer to www.daytonsuperior.com for latest Technical Data Sheet and MSDS
7777 Washington Village Dr., Suite 130, Dayton OH 45459
Customer Service: (888) 977-9600
Technical Assistance: (866) 329-8724