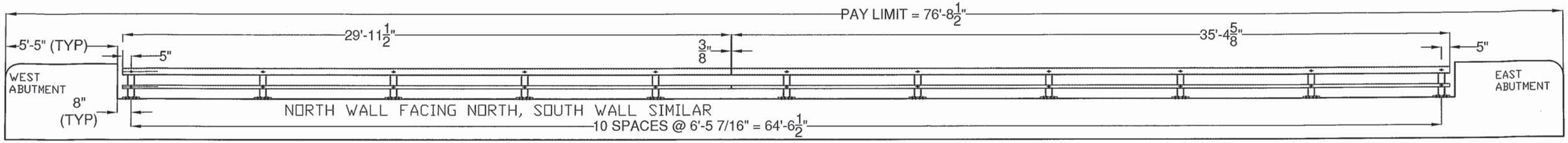

HARDWARE NOTES	
ITEM #	FUNCTION
13	BOLT BOTTOM RAIL TO POST (ITEM #1)
14	BOLT TOP RAIL TO POST (ITEM #1)
15	BOLT BOTTOM SPLICE BARS (ITEM #6) TO BOTTOM RAIL
16	BOLT TOP SPLICE BARS (ITEM #7) TO TOP RAIL

BILL OF MATERIAL

and A572 Gr. 50 for End Plates

ITEM #	QTY	PART #	DESCRIPTION	ASTM DESIGNATION
1	22	0033.90017	TWO RAIL POST & BASE PLATE ASSEMBLY	A572 Gr. 50, A500 Gr. B
2	2	TBD	4" X 3" X 1/4" RAIL @ 29'-11 1/2" W/ END PLATES	A500 Gr. B
3	2	TBD	4" X 3" X 1/4" RAIL @ 35'-4 5/8" W/ END PLATES	A500 Gr. B
4	2	TBD	2" X 2" X 1/8" RAIL @ 29'-11 1/2" W/ END PLATES	A500 Gr. B
5	2	TBD	2" X 2" X 1/8" RAIL @ 35'-4 5/8" W/ END PLATES	A500 Gr. B
6	2	0033.90069	1-1/2" X 1-1/2" FIX. SPL BAR @ 2' 4"	A572 Gr. 50
7	2	0033.90071	2-1/4" X 3-1/4" FIX. SPL. BAR @ 2' 4"	A572 Gr. 50
8	44	0033.00295	3/8" X 2 1/4" X 7 3/8" ANCHOR PLATES	A36
9	90*	0042.05813	ø 5/8" X 13" ANCHOR STUDS	A449
10	178*	0080.15901	ø 5/8" HEAVY HEX NUTS	A563
11	88	0080.15911	ø 5/8" FLAT WASHERS	F436
12	88	0080.15920	ø 5/8" LOCK WASHERS	ASME D18.2
13	22	0080.05565	ø 5/8" X 7 1/2" SLOTTED, ROUND HEAD BOLT, NUT, F.W., & L.W.	A449, A563, F436, & ASME D18.2
14	22	0080.06410	ø 3/4" X 8 1/2" SLOTTED, ROUND HEAD BOLT, NUT, F.W., & L.W.	A449, A563, F436, & ASME D18.2
15	8	0080.05275	ø 5/8" X 3" HEX BOLT, NUT, F.W., & L.W.	A325, A563, F436, & ASME D18.2
16	8	0080.07330	ø 7/8" X 5 1/2" HEX BOLT, NUT, F.W., & L.W.	A325, A563, F436, & ASME D18.2
17	22	0033.00053	1/8" ELASTOMERIC PAD	D2240
18	2	0033.40375	APPROACH, END WALL CONNECTORS	PER BOM
19	2	0033.40376	TRAILING, END WALL CONNECTORS	PER BOM
20	6		DELINEATORS (SUPPLIED BY F.R. LaFAYETTE)	ALUMINUM

*-2 EXTRA FOR VOAT TESTING

ASME B18.21

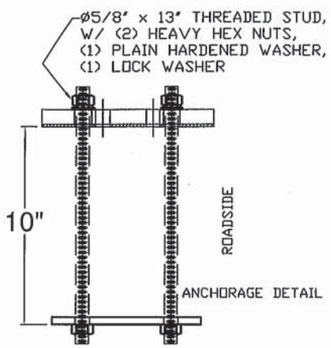

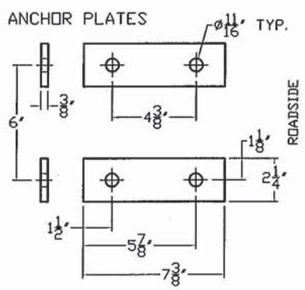

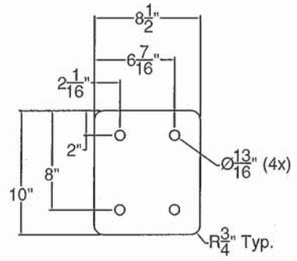

1/8" Elastomeric Pad

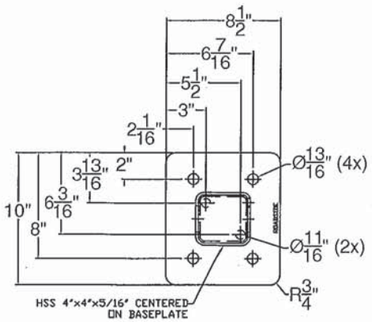

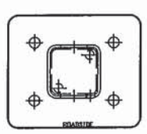

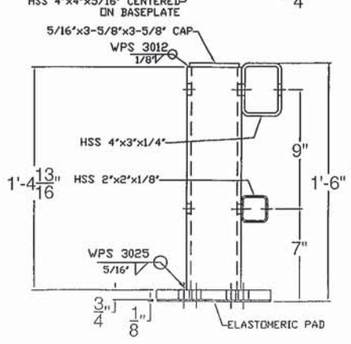

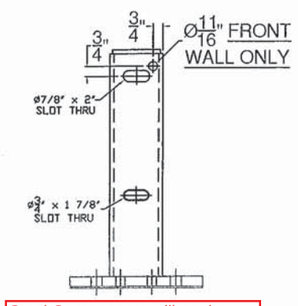

Steel Components will not be painted black.

and may be field drilled

NOTES:

1. ALL WORK AND MATERIALS SHALL CONFORM TO SECTION 525.
2. PRIOR TO GALVANIZING THE ASSEMBLED POST, GRIND ALL EDGES TO A MINIMUM RADIUS OF 1/16".
3. ALL POSTS SHALL BE SET NORMAL TO GRADE.
4. SECTIONS OF RAIL TUBE SHALL BE ATTACHED TO A MINIMUM OF TWO BRIDGE POSTS AND PREFERABLY TO AT LEAST 4 POSTS.
5. HOLES IN RAILS FOR TUBE ATTACHMENT, WILL BE SHOP-DRILLED. HOLES SHALL BE COATED WITH AN APPROVED ZINC-RICH PAINT PRIOR TO INSTALLATION.
6. BOLTS SHALL BE TORQUED SNUG TIGHT (APPROXIMATELY 100 FT-LB).
7. RAIL TUBES SHALL BE ATTACHED USING FULL DIAMETER BODY ASTM A449 (TYPE I) ROUND HEAD BOLTS INSERTED THROUGH THE FACE OF THE TUBE.
8. SEE STANDARD DRAWING G-I FOR DETAILS OF DELINEATORS. A DELINEATOR SHALL BE INSTALLED AT 30 FOOT SPACING OR THE NEAREST POST. WHITE IS TO BE INSTALLED ON THE DRIVER'S RIGHT. FOR ONE WAY BRIDGES, YELLOW IS TO BE INSTALLED ON THE DRIVER'S LEFT. PAYMENT FOR DELINEATORS SHALL BE INCIDENTAL TO OTHER ITEMS.
9. AESTHETIC TREATMENT TYPE SHALL BE APPLIED AS SPECIFIED IN THE CONTRACT PLANS. IF NONE IS SPECIFIED IT SHALL NOT BE USED. AESTHETIC TREATMENT DETAILED ON THIS SHEET MAY ALSO BE APPLIED ON THE FASCIA SIDE OF THE RAIL, IF SPECIFIED IN THE CONTRACT PLANS.
10. BRIDGE RAILING SHALL HAVE A RUBBED FINISH IN ACCORDANCE WITH SECTION 501.
11. ~~THIS RAILING MEETS THE REQUIREMENTS FOR A NCHRP REPORT 350 TL-4 SERVICE LEVEL.~~
12. HOLES FOR MOUNTING DELINEATORS TO BE FIELD DRILLED. HOLES SHALL BE COATED WITH AN APPROVED ZINC-RICH PAINT PRIOR TO INSTALLATION.
13. ~~ALL STEEL COMPONENTS SHALL BE COATED BLACK IN ACCORDANCE WITH ASTM D7803 FOLLOWING GALVANIZING.~~

Please Delete Note. 11.

Vermont Agency of Transportation
RECEIVED
CK'D BY J. Grigas / R. Foster OK'D BY G. Laroche
January 21, 2016
RESUBMIT Yes Rejected
BY K. Higgins DATE 02/08/2016

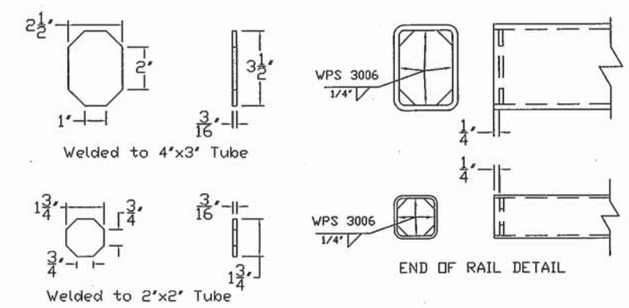

ITEM #: 525.45

SHEET 1 OF 3

STRUCTURAL STEEL TO COMPLY W/ ASTM A6

TOLERANCE UNLESS OTHERWISE NOTED:
FRACTIONS = ± 1/16"
ANGLES = ± 1/2°
DIAMETERS = ± 1/32"

BRIDGE RAIL DETAILS SHEET

ROUTE NO. T.H. 3 (CLASS 2), RURAL COLLECTOR, BRIDGE # 11
TOWN OF CLARENDON, RUTLAND COUNTY, VT.

REV	NO.	DATE	DESCRIPTION	BY	REV	NO.	DATE	DESCRIPTION	BY

ELDERLEE, INC.
OAKS CORNERS, NEW YORK 14518
E-Mail: dlong@elderlee.com / epeek@elderlee.com
Tel: 315-789-6670 Fax: 315-789-6615

AISC CERTIFIED FABRICATOR

DRAWN	E.P.	1/20/16
CHECKED	D.L.	1/20/16
APPROVED		
SCALE	SCHEMATIC	
DRAWING NO.	FRL - CLARENDON (48)	

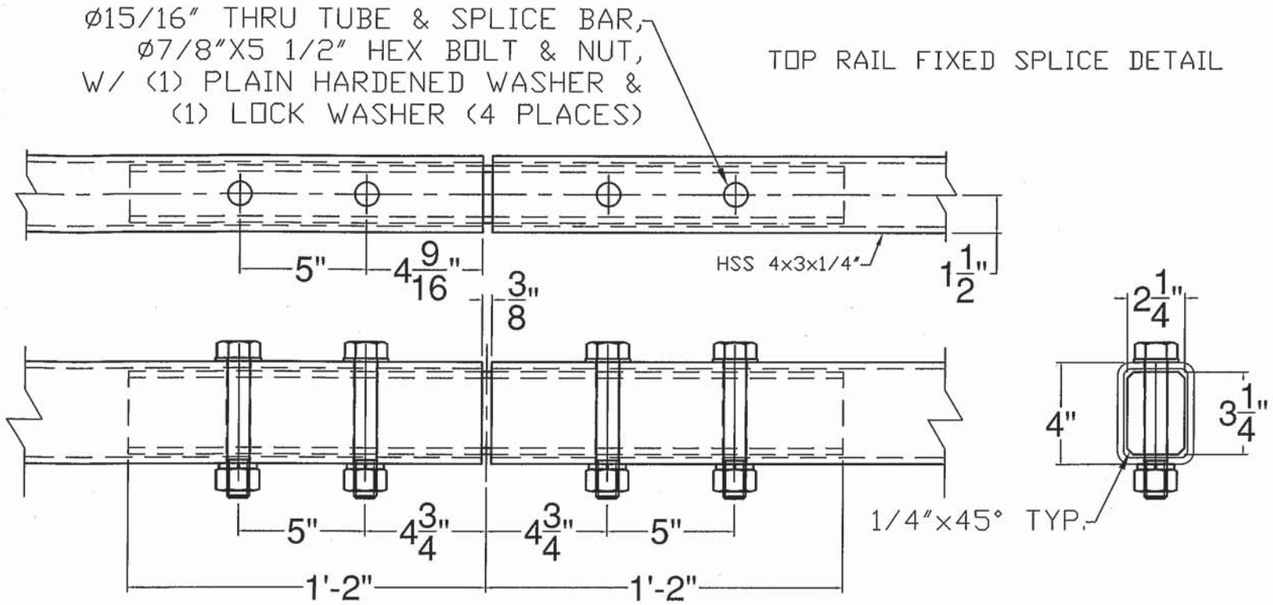

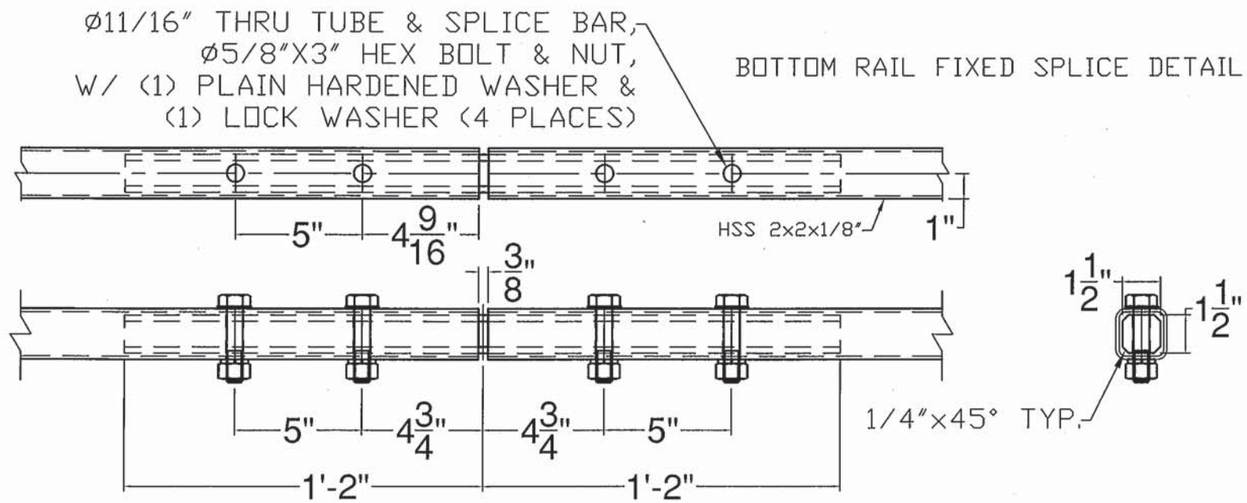

Vermont Agency of Transportation
RECEIVED
CK'D BY J. Grigas / R. Foster OK'D BY G. Laroche
January 21, 2016
RESUBMIT Yes Rejected
BY K. Higgins DATE 02/08/2016

ITEM #: 525.45

SHEET 2 OF 3

STRUCTURAL STEEL TO COMPLY W/ ASTM A6

TOLERANCE UNLESS OTHERWISE NOTED:
FRACTIONS = ± 1/16"
ANGLES = ± 1/2°
DIAMETERS = ± 1/32"

BRIDGE RAIL DETAILS SHEET

ROUTE NO. T.H. 3 (CLASS 2), RURAL COLLECTOR , BRIDGE # 11
TOWN OF CLARENDON, RUTAND COUNTY, VT.

REV	NO.	DATE	DESCRIPTION	BY	REV	NO.	DATE	DESCRIPTION	BY

ELDERLEE, INC.
OAKS CORNERS, NEW YORK 14518
E-Mail: dlong@elderlee.com / epeek@elderlee.com
Tel: 315-789-6670 Fax: 315-789-6615

AISC CERTIFIED FABRICATOR

DRAWN	E.P.	1/20/16
CHECKED	D.L.	1/20/16
APPROVED	.	.
SCALE	SCHEMATIC	
DRAWING NO.	FRL - CLARENDON (48)	

BILL OF MATERIALS			
ITEM #	QTY	DESCRIPTION	ASTM #
1	1	DBL TUBE WALL PLATE - 1" X 12" x 25"	ASTM A572 Gr. 50
2	10	ø3/4" X 10" STUD	TO BE PURCHASED
3	2	5" X 5" X 5/16" TUBE W/ SLOTS @ 18"	ASTM A500 Gr. B
4	2	SHIM PL 1/2" X 4" X 17" W/ SLOTS	ASTM A709 Gr. 36 CVN
5	2	SHIM PL 1/2" X 4" X 17" (W/O SLOTS)	ASTM A709 Gr. 36 CVN

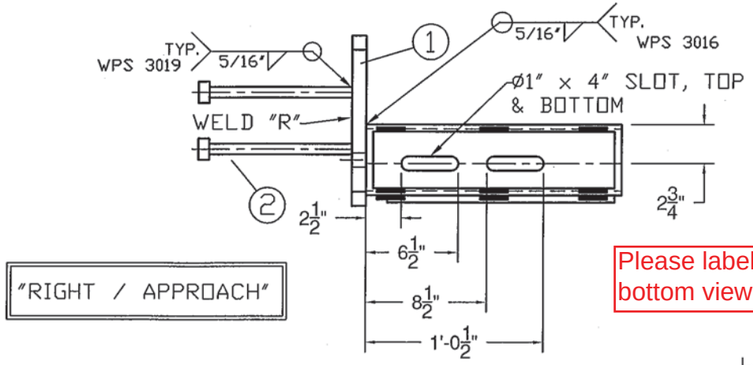

PROTRUSIONS CAUSED BY WELDING OR GALVANIZING ARE NOT PERMITTED ON THE SPLICE TUBES AND FILL PLATES

Please label top or bottom view.

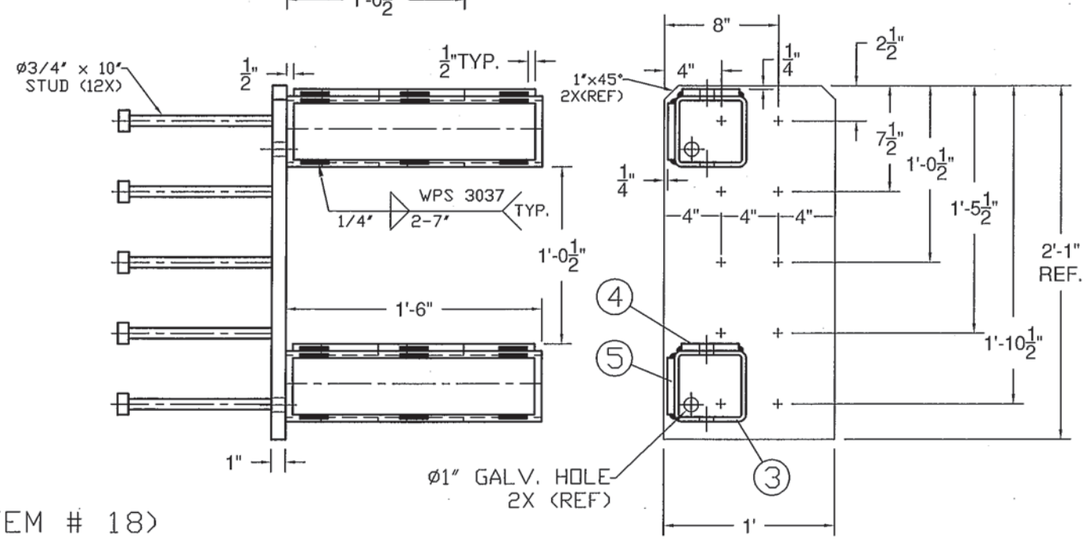

(ITEM # 18)

BILL OF MATERIALS			
ITEM #	QTY	DESCRIPTION	ASTM #
1	1	DBL TUBE WALL PLATE - 1" X 12" x 25"	ASTM A572 Gr. 50
2	10	ø3/4" X 10" STUD	TO BE PURCHASED
3	2	5" X 5" X 5/16" TUBE W/ SLOTS @ 18"	ASTM A500 Gr. B
4	2	SHIM PL 1/2" X 4" X 17" W/ SLOTS	ASTM A709 Gr. 36 CVN
5	2	SHIM PL 1/2" X 4" X 17" (W/O SLOTS)	ASTM A709 Gr. 36 CVN

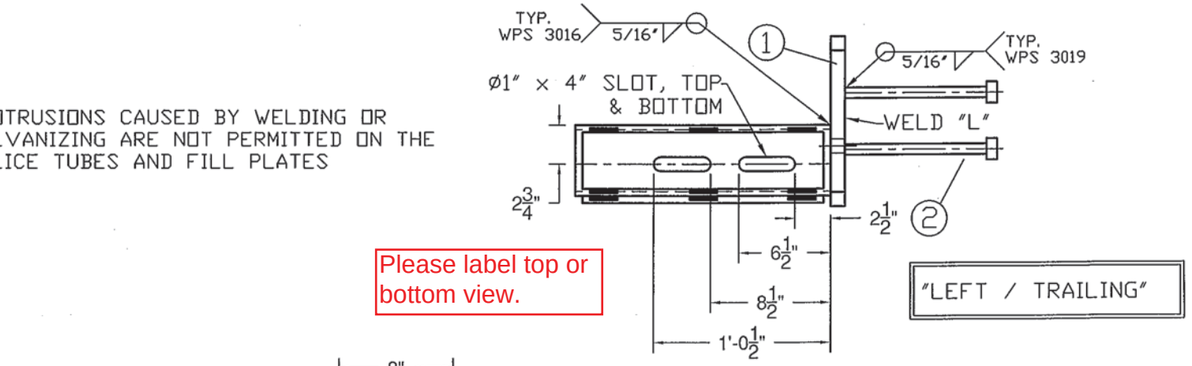

PROTRUSIONS CAUSED BY WELDING OR GALVANIZING ARE NOT PERMITTED ON THE SPLICE TUBES AND FILL PLATES

Please label top or bottom view.

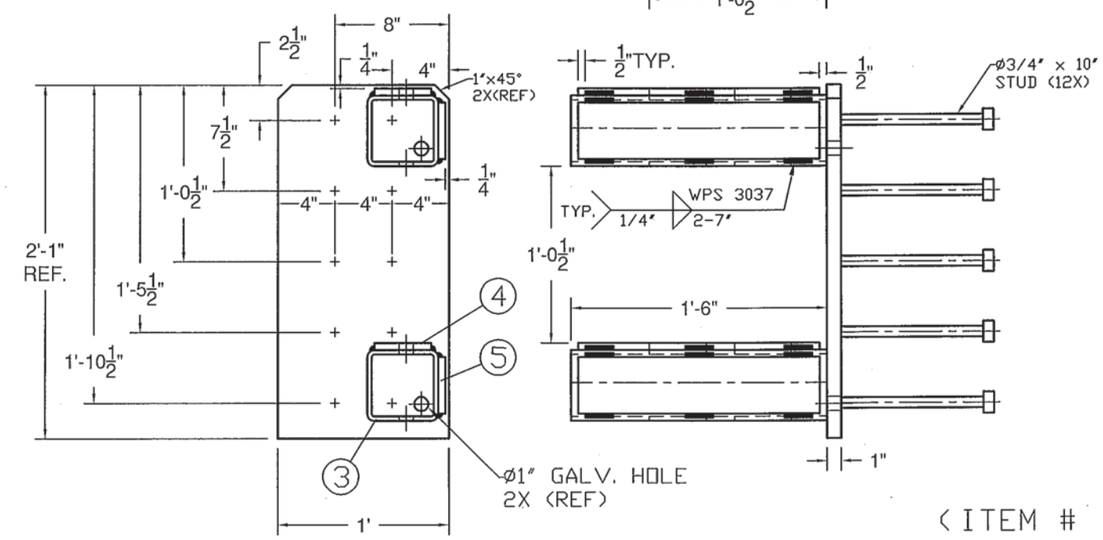

(ITEM # 19)

Vermont Agency of Transportation
RECEIVED
CK'D BY J. Grigas / R. Foster OK'D BY G. Laroche
January 21, 2016
RESUBMIT Yes Rejected
BY K. Higgins DATE 02/08/2016

ITEM #: 525.45

SHEET 3 OF 3

STRUCTURAL STEEL TO COMPLY W/ ASTM A6

TOLERANCE UNLESS OTHERWISE NOTED:
FRACTIONS = ± 1/16"
ANGLES = ± 1/2°
DIAMETERS = ± 1/32"

BRIDGE RAIL DETAILS SHEET

ROUTE NO. T.H. 3 (CLASS 2), RURAL COLLECTOR , BRIDGE # 11
TOWN OF CLARENDON, RUTAND COUNTY, VT.

REV	NO.	DATE	DESCRIPTION	BY	REV	NO.	DATE	DESCRIPTION	BY

ELDERLEE, INC.
OAKS CORNERS, NEW YORK 14518
E-Mail: dlong@elderlee.com / epeek@elderlee.com
Tel: 315-789-6670 Fax: 315-789-6615

AISC CERTIFIED FABRICATOR

DRAWN	E.P.	1/20/16
CHECKED	D.L.	1/20/16
APPROVED	.	.
SCALE	SCHEMATIC	
DRAWING NO.	FRL - CLARENDON (48)	

Vermont Agency of Transportation
RECEIVED
CK'D BY J. Grigas / R. Foster OK'D BY G. Laroche
January 21, 2016
RESUBMIT Yes Rejected
BY K. Higgins DATE 02/08/2016

WELDING PROCEDURE SPECIFICATION

Material Specification	A36 TO A500
Welding Process	FCAW
Manual or Machine	SEMAUTOMATIC
Position of Welding	FLAT / HORIZONTAL
Filler Metal Specification	A5.20 - 95
Filler Metal Classification	E81T1-Ni1C-JH4
Flux	N/A
Shielding Gas	CO 2 Dew Point -40DEG F Flow Rate 50CFH
Single or Multiple Pass	SINGLE
Single or Multiple Arc	SINGLE
Welding Current	DC
Polarity	REVERSE ELECTRODE POSITIVE
Welding Progression	STRINGER
Root Treatment	PER D1.5
Preheat and Interpass Temperature	PER D1.5
Postheat Temperature	NONE
Heat Input	Min Max

WHY DID ALL OF THESE CHANGE FOR THIS WPS? NO MENTION OF THE PQR, PROCESS IS FCAW INSTEAD OF FCAW-G, AND THE FILLER METAL SPEC CHANGED FROM 5.29 to 5.20.

WELDING PROCEDURE

Pass no.	Electrode size	Welding Current Amperes	Welding Current Volts	Travel speed	Joint detail
1	1/16	300	26	14	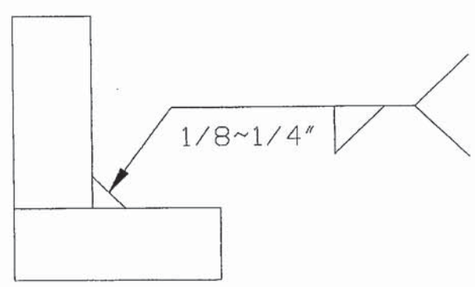
Variable	LIMITS	270 TO 330	24 TO 28	12.6 TO 15.4	

This procedure may vary due to fabrication sequence, fit-up, pass size, etc., within the limitation of variables given in Section 5.

Procedure No. 3006
Revision No.

Contractor Elderlee, Inc.
Authorized By RANDY SCOTT
Date 8/4/2014

Form III-2

Vermont Agency of Transportation
RECEIVED
CK'D BY J. Grigas / R. Foster OK'D BY G. Laroche
January 21, 2016
RESUBMIT Yes Rejected
BY K. Higgins DATE 02/08/2016

WELDING PROCEDURE SPECIFICATION

PQR ELDERLEE #3

Material Specification	ASTM-A500-A53-GRADE B TO A36
Welding Process	FCAW-G
Manual or Machine	SEMAUTOMATIC
Position of Welding	1G
Filler Metal Specification	A5.29
Filler Metal Classification	E81T1-Ni1C-JH4
Flux	N/A
Shielding Gas	CO 2 Dew Point -40DEG F FLOW RATE 50 CFH
Single or Multiple Pass	SINGLE
Single or Multiple Arc	SINGLE
Welding Current	DC
Polarity	REVERSE ELECTRODE POSITIVE
Welding Progression	STRINGER
Root Treatment	PER D1.5
Preheat and Interpass Temperature	PER. D1.5
Postheat Temperature	NONE
Heat Input	Min Max

FLAT ONLY??

WELDING PROCEDURE

Pass no.	Electrode size	Welding Current Amperes	Welding Current Volts	Travel speed	Joint detail
1	1/16	310	25	11	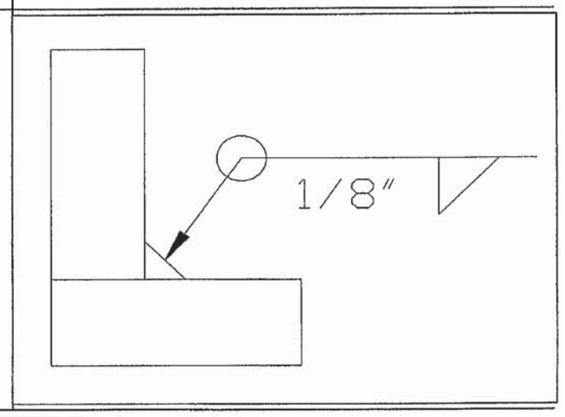
Variable	LIMITS	341 TO 269	27 TO 23	12 TO 10	

This procedure may vary due to fabrication sequence, fit-up, pass size, etc., within the limitation of variables given in Section 5.

Procedure No. 3012
Revision No.

Contractor Elderlee, Inc.
Authorized By RANDY SCOTT
Date 3/20/2014

Vermont Agency of Transportation
RECEIVED
CK'D BY J. Grigas / R. Foster OK'D BY G. Laroche
January 21, 2016
RESUBMIT Yes Rejected
BY K. Higgins DATE 02/08/2016

WELDING PROCEDURE SPECIFICATION

PQR ELDERLEE #3

Material Specification	A500 TO A572 GR 50
Welding Process	FCAW-G
Manual or Machine	SEMAUTOMATIC
Position of Welding	FLAT/HORIZONTAL
Filler Metal Specification	A5.29
Filler Metal Classification	E81T1-Ni1C-JH4
Flux	N/A
Shielding Gas	CO 2 Dew Point -40DEG F Flow Rate 50CFH
Single or Multiple Pass	SINGLE
Single or Multiple Arc	SINGLE
Welding Current	DC
Polarity	REVERSE
Welding Progression	STRINGER
Root Treatment	PER D1.5
Preheat and Interpass Temperature	PER D1.5
Postheat Temperature	NONE
Heat Input	Min Max

WELDING PROCEDURE

Pass no.	Electrode size	Welding Current Amperes	Welding Current Volts	Travel speed	Joint detail
1	1/16	310	25	11	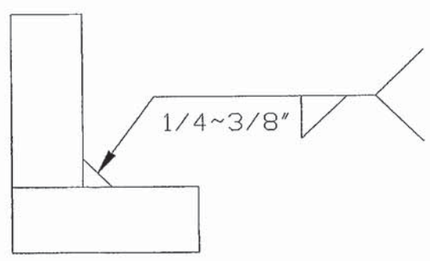
Variable	LIMITS	341 TO 269	27 TO 23	12 TO 10	

This procedure may vary due to fabrication sequence, fit-up, pass size, etc., within the limitation of variables given in Section 5.

Procedure No. 3016
Revision No.

Contractor Elderlee, Inc.
Authorized By RANDY SCOTT
Date 8/4/2014

Vermont Agency of Transportation
RECEIVED
CK'D BY J. Grigas / R. Foster OK'D BY G. Laroche
January 21, 2016
RESUBMIT Yes Rejected
BY K. Higgins DATE 02/08/2016

Shear Studs should be ASTM A108 and meet the requirements of subsection 714.10 of the Standard Specifications.

WELDING PROCEDURE SPECIFICATION

PQR ELDERLEE #3

Material Specification	ASTM A572 GR. 50 TO A325
Welding Process	FCAW-G
Manual or Machine	SEMAUTOMATIC
Position of Welding	FLAT/HORIZONTAL
Filler Metal Specification	A5.29
Filler Metal Classification	E81T1-Ni1C-JH4
Flux	N/A
Shielding Gas	CO 2 Dew Point -40DEG F Flow Rate 50CFH
Single or Multiple Pass	SINGLE
Single or Multiple Arc	SINGLE
Welding Current	DC
Polarity	REVERSE ELECTRODE POSITIVE
Welding Progression	STRINGER
Root Treatment	CLEAN PER D1.5
Preheat and Interpass Temperature	PER D1.5
Postheat Temperature	NONE
Heat Input	Min Max

WELDING PROCEDURE

Pass no.	Electrode size	Welding Current Amperes	Welding Current Volts	Travel speed	Joint detail
1	1/16	310	25	11	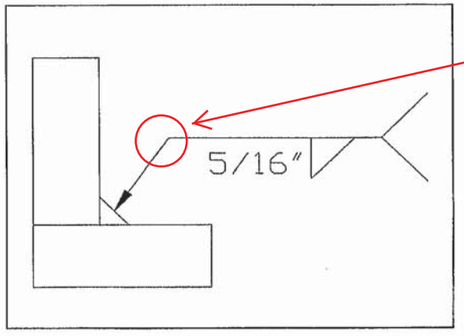
Variable	LIMITS	341 TO 269	27 TO 23	12 TO 10	

To be Welded all around

This procedure may vary due to fabrication sequence, fit-up, pass size, etc., within the limitation of variables given in Section 5.

Procedure No. 3019
Revision No.

Contractor Elderlee, Inc.
Authorized By RANDY SCOTT
Date 7/28/2014

Vermont Agency of Transportation
RECEIVED
CK'D BY J. Grigas / R. Foster OK'D BY G. Laroche
January 21, 2016
RESUBMIT Yes Rejected
BY K. Higgins DATE 02/08/2016

WELDING PROCEDURE SPECIFICATION

PQR ELDERLEE #3

Material Specification	A572 TO A500
Welding Process	FCAW-G
Manual or Machine	SEMAUTOMATIC
Position of Welding	FLAT/HORIZONTAL
Filler Metal Specification	A5.29
Filler Metal Classification	E81T1-Ni1C-JH4
Flux	N/A
Shielding Gas	CO 2 Dew Point -40DEG F Flow Rate 50CFH
Single or Multiple Pass	SINGLE
Single or Multiple Arc	SINGLE
Welding Current	DC ELECTRODE POSITIVE
Polarity	REVERSE
Welding Progression	STRINGER
Root Treatment	PER D1.5
Preheat and Interpass Temperature	PER D1.5
Postheat Temperature	NONE
Heat Input	Min Max

WELDING PROCEDURE

Pass no.	Electrode size	Welding Current Amperes	Welding Current Volts	Travel speed	Joint detail
1	1/16	310	25	11	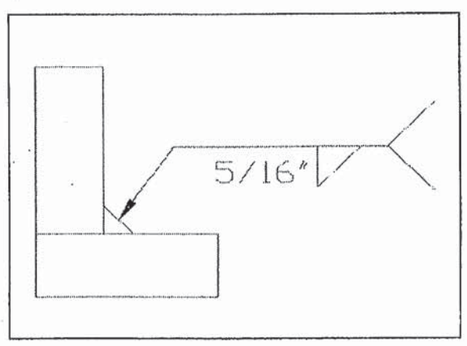
Variable	LIMITS	341 TO 269	27 TO 23	12 TO 10	

This procedure may vary due to fabrication sequence, fit-up, pass size, etc., within the limitation of variables given in Section 5.

Procedure No. 3025
Revision No.

Contractor Elderlee, Inc.
Authorized By RANDY SCOTT
Date 12/1/2014

Vermont Agency of Transportation
RECEIVED
CK'D BY J. Grigas / R. Foster OK'D BY G. Laroche
January 21, 2016
RESUBMIT Yes Rejected
BY K. Higgins DATE 02/08/2016

WELDING PROCEDURE SPECIFICATION

PQR ELDERLEE #3

Material Specification	ASTM A572 GR. 50 CVN TO A500 GR B
Welding Process	FCAW-G
Manual or Machine	SEMAUTOMATIC
Position of Welding	FLAT/HORIZONTAL
Filler Metal Specification	A5.29
Filler Metal Classification	E81T1-Ni1C-JH4
Flux	N/A
Shielding Gas	CO 2 Dew Point -40DEG F Flow Rate 50CFH
Single or Multiple Pass	SINGLE
Single or Multiple Arc	SINGLE
Welding Current	DC
Polarity	REVERSE ELECTRODE POSITIVE
Welding Progression	STRINGER
Root Treatment	PER D1.5
Preheat and Interpass Temperature	PER D1.5
Postheat Temperature	NONE
Heat Input	Min Max

THIS DOESNT MATCH THE MATERIAL LIST

WELDING PROCEDURE

Pass no.	Electrode size	Welding Current Amperes	Welding Current Volts	Travel speed	Joint detail
1	1/16	310	25	11	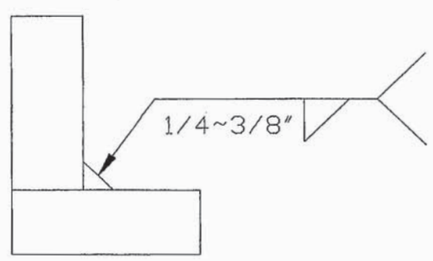
Variable	LIMITS	341 TO 269	27 TO 23	12 TO 10	

This procedure may vary due to fabrication sequence, fit-up, pass size, etc., within the limitation of variables given in Section 5.

Procedure No. 3037
Revision No.

Contractor Elderlee, Inc.
Authorized By RANDY SCOTT
Date 12/1/2014