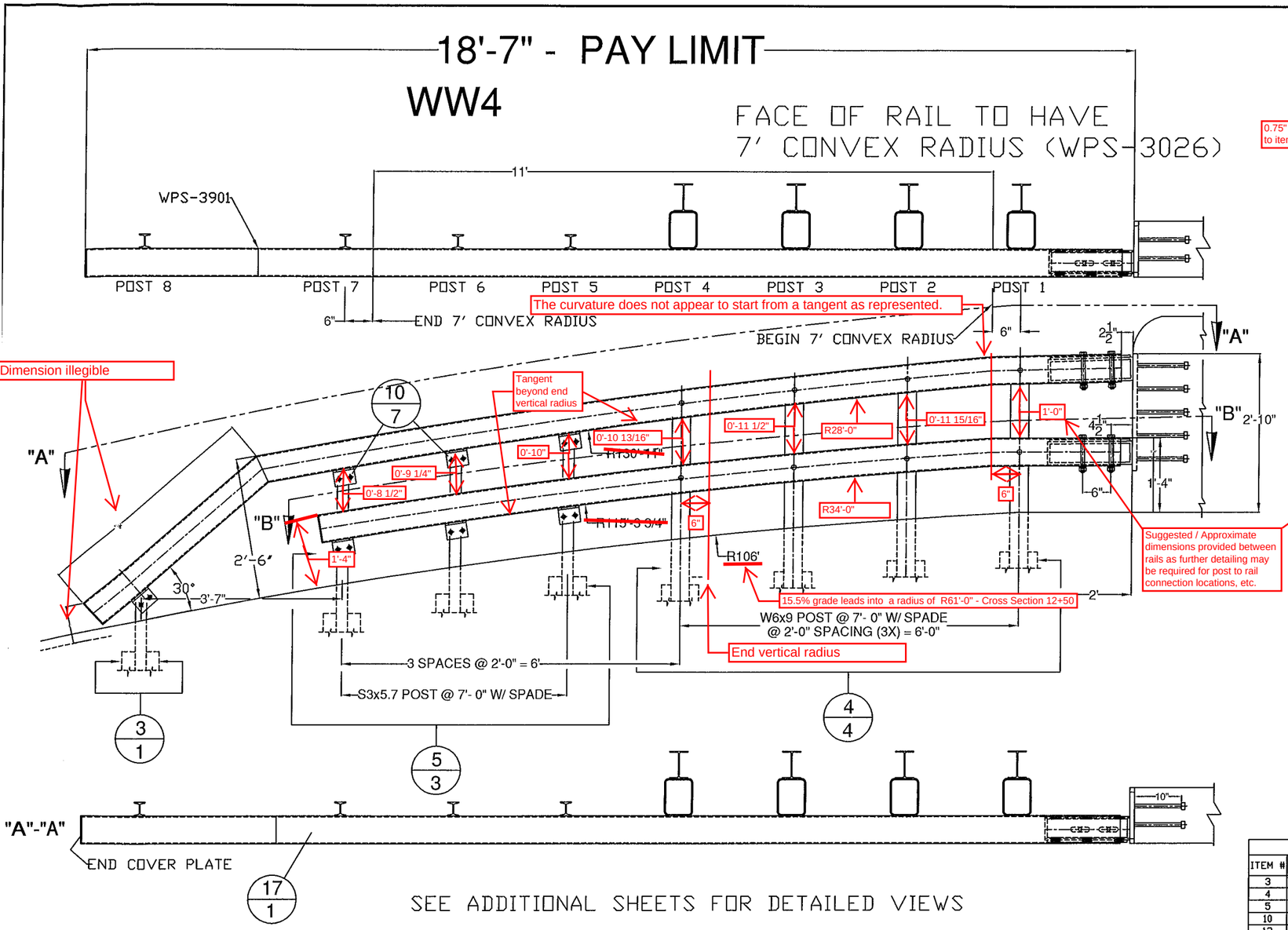


SEE ADDITIONAL SHEETS FOR DETAILED VIEWS

# GUARD RAIL TO BRIDGE RAIL TRANSITION

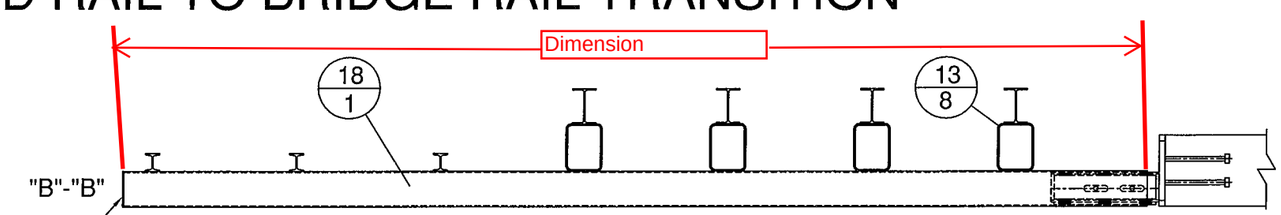


The WPS needs to be called out for the end plates. (TYP)

Provide end cover plate detail. It has not been included in this set of drawings.

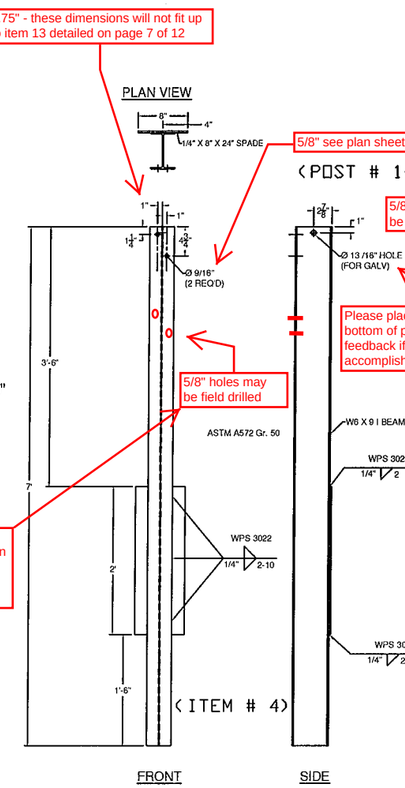


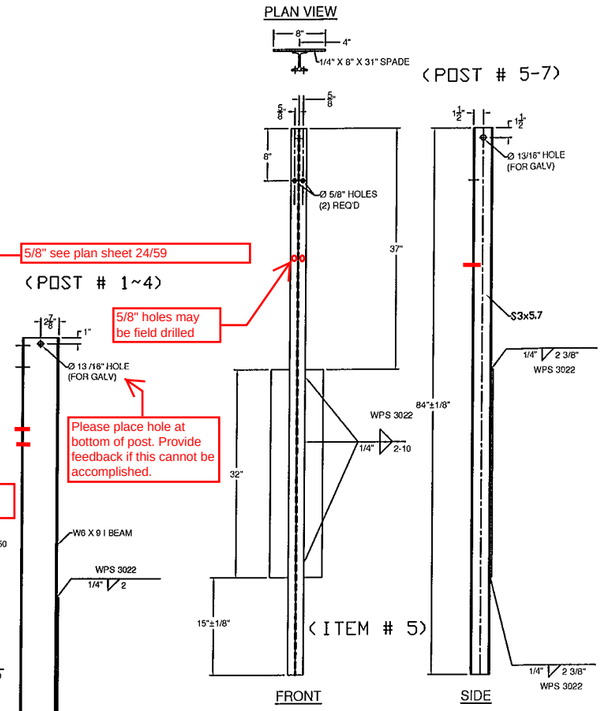


Vermont Agency of Transportation
RECEIVED
Clarendon BRO 1443(44) Approach Rail Submittal 3-10-16 3-22-2016.pdf

CK'D BY RF, SC OK'D BY G. Laroche

March 10, 2016

RESUBMIT Yes Rejected

BY K. Higgins DATE 03/22/2016

BILL OF MATERIALS, WW4

| ITEM # | QTY. | COMPONENT # | DESCRIPTION | MATERIAL (ASTM) |
|---|---|---|---|---|
| 3 | 1 | 0013.57060 | 3' I-END POST W/SPD @ 3'-8" LG | ASTM A572 Gr. 50 |
| 4 | 4 | - | W6X9 POST @ 7' W/SPD & ø9/16" HOLE (SPECIAL) | ASTM A572 Gr. 50 |
| 5 | 3 | - | 3' I-POST, PUNCH 8", W/8X32" SPADE @ 7' (SPECIAL) | ASTM A572 Gr. 50 |
| 10 | 7 | 0054.00050 | REG BB SHELF ANGLES @ 4-1/2' | ASTM A709 Gr. 50 |
| 13 | 8 | 0054.00563 | 6X8' TRANS. TUBE B/O @ 6' LG | A500 Gr. B |
| 17 | 1 | - | 6X6' BB TOP TRANS @ 15'-5 1/2' LG W/ TURNDOWN & 7' CONVEX RADIUS | A500 Gr. B |
| 18 | 1 | - | 6X6' BB BTM TRANS @ 14'-3 7/8' LG W/ 7' CONVEX RADIUS | A500 Gr. B |
| 19 | 7 | 0080.03355 | 3/8" X 7 1/2" BOLT, NUT, & 2 FW | A307, A563, F436 |
| 20 | 7 | 0080.04100 | 1/2" x 1-1/2" BOLT, NUT, & FW | A307, A563, F436 |
| 21 | 16 | 0080.04120 | 1/2" x 1-1/2" BOLT, NUT, & 2 FW | A307, A563, F436 |
| 23 | 4 | 0080.06340 | 3/4" X 7-1/2" BOLT, NUT, 2 FW | A325, A563, F436 |
| 23 | 4 | | 3/4" LOCK WASHER | ASME B18.21.1 |
| 24 | 8 | 0080.06370 | 3/4" X 8" CARR BOLT, NUT, FW & LW | A307, A563, F436 |

900.620 SPECIAL PROVISION (GUARDRAIL
ITEM #: APPROACH SECTION TO CONCRETE BRIDGE RAIL)

SHEET 1 OF 12

STRUCTURAL STEEL TO COMPLY W/ ASTM A6

TOLERANCE UNLESS OTHERWISE NOTED:
FRACTIONS = ± 1/16"
ANGLES = ± 1/2°
DIAMETERS = ± 1/32"

SPECIAL PROVISION, GRAS - CONCRETE COMBINATION BR.
ROUTE NO. T.H. 3 (CLASS 2), RURAL COLLECTOR, BRIDGE # 11
TOWN OF CLARENDON, RUTAND COUNTY, VT.

| REV | NO. | DATE | DESCRIPTION | BY | REV | NO. | DATE | DESCRIPTION | BY |
|---|---|---|---|---|---|---|---|---|---|
| | 1 | 3/10/16 | REVISED PER 2/23/16 MARK-UP | E.P. | | | | | |

ELDERLEE, INC.
OAKS CORNERS, NEW YORK 14518
email: dlong@elderlee.com / epeek@elderlee.com
Tel: 315-789-6670 Fax: 315-789-6615

AISC CERTIFIED FABRICATOR
ORTHOGRAPHIC PROJECTION

| | | |
|---|---|---|
| DRAWN | E.P. | 01/29/16 |
| CHECKED | D.L. | - |
| APPROVED | M.V. | - |
| SCALE | SCHEMATIC | |
| DRAWING NO. | FRL - CLARENDON - T | |

Vermont Agency of Transportation
RECEIVED
CK'D BY RF, SC OK'D BY G. Laroche
March 10, 2016
RESUBMIT Yes Rejected
BY K. Higgins DATE 03/22/2016

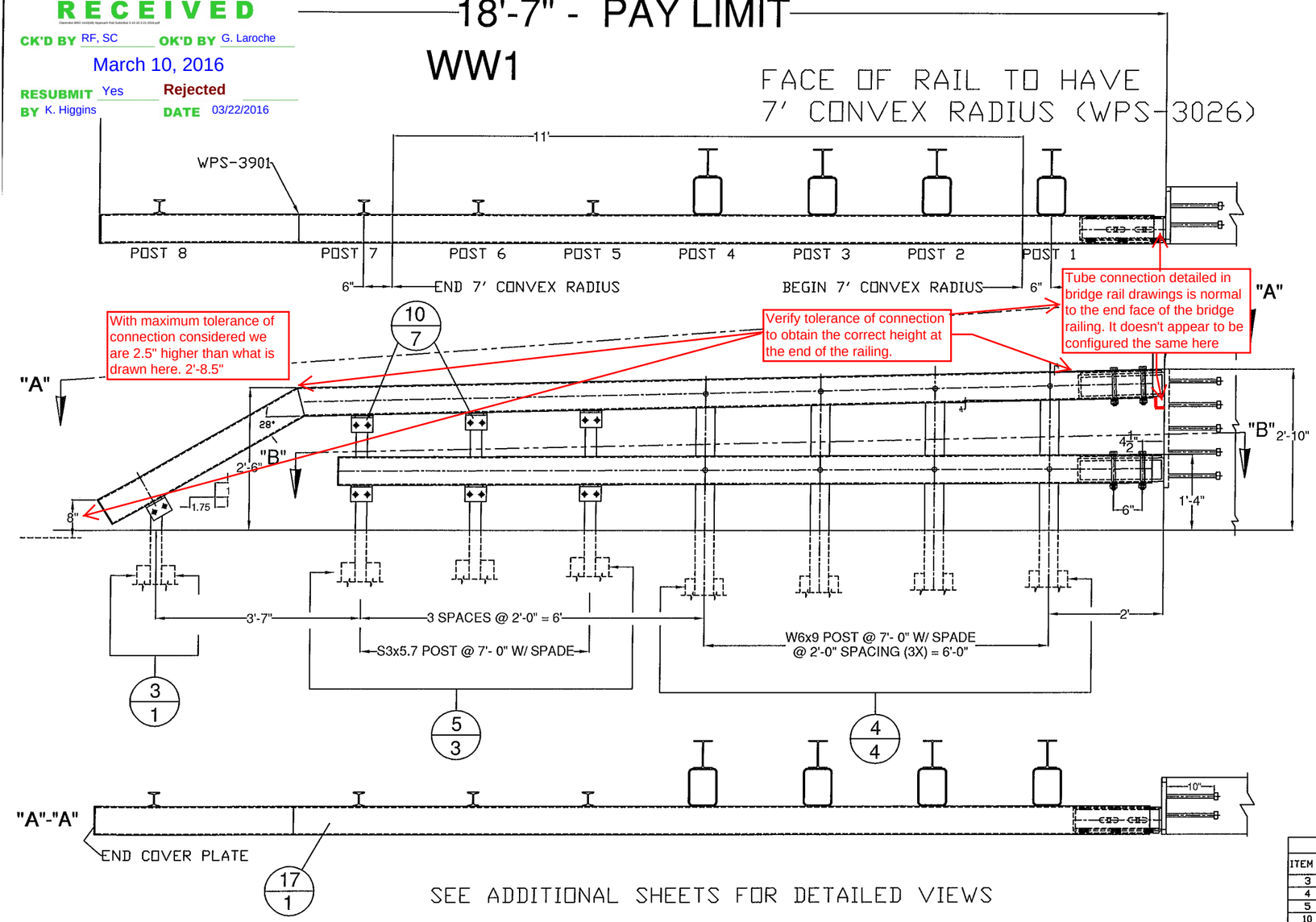


With maximum tolerance of connection considered we are 2.5" higher than what is drawn here. 2'-8.5"

Verify tolerance of connection to obtain the correct height at the end of the railing.

Tube connection detailed in bridge rail drawings is normal to the end face of the bridge railing. It doesn't appear to be configured the same here

# GUARD RAIL TO BRIDGE RAIL TRANSITION

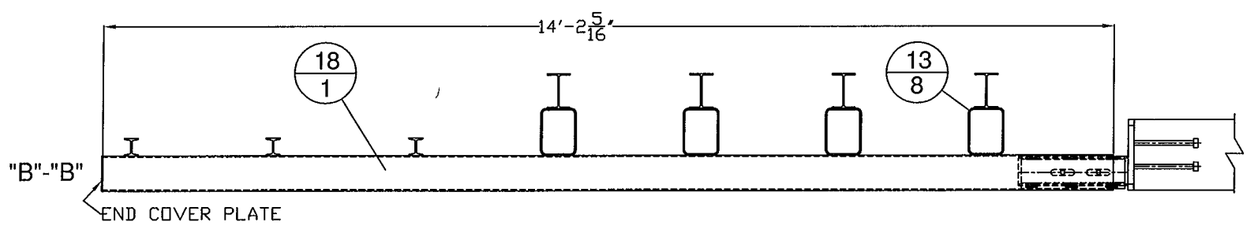


The WPS needs to be called out for the end plates. (TYP)

Provide miter cut angles

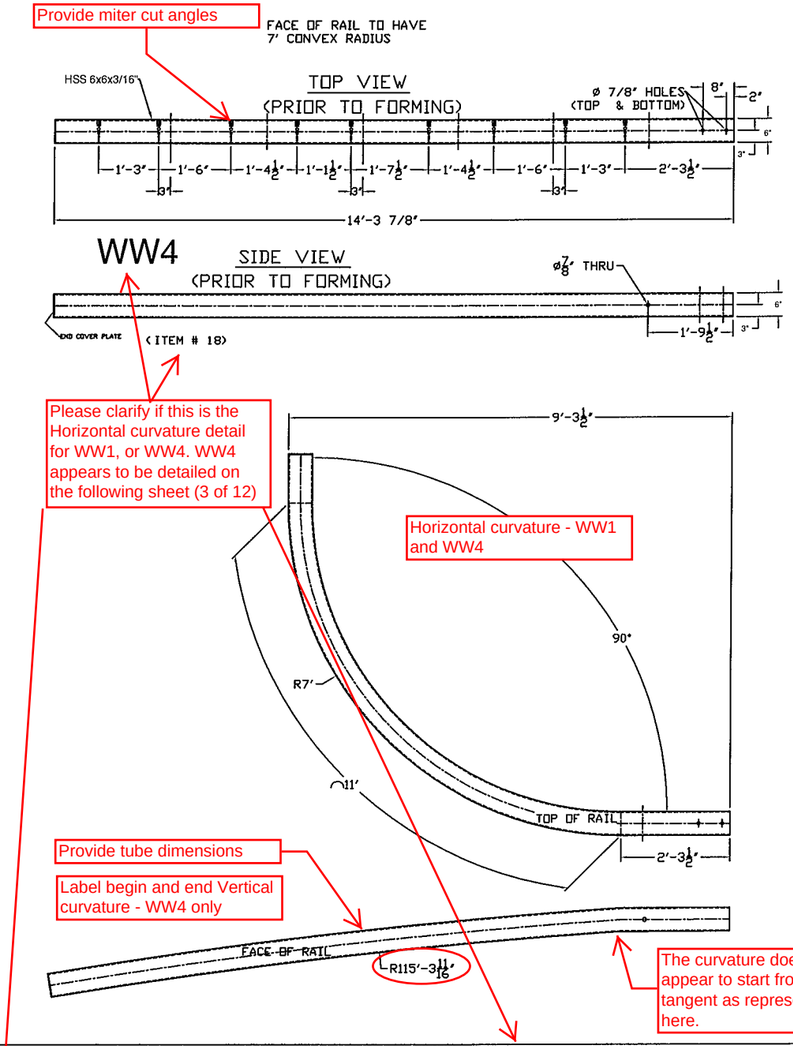


Please clarify if this is the Horizontal curvature detail for WW1, or WW4. WW4 appears to be detailed on the following sheet (3 of 12)

Horizontal curvature - WW1 and WW4

Provide tube dimensions

Label begin and end Vertical curvature - WW4 only

The curvature does not appear to start from a tangent as represented here.

BILL OF MATERIALS, WW1

| ITEM # | QTY. | COMPONENT # | DESCRIPTION | MATERIAL (ASTM) |
|---|---|---|---|---|
| 3 | 1 | 0013.57060 | 3' I-END POST W/SPD @ 3'-8" LG | ASTM A572 Gr. 50 |
| 4 | 4 | - | W6X9 POST @ 7' W/SPD & ø9/16" HOLES @ VARIOUS | ASTM A572 Gr. 50 |
| 5 | 3 | - | 3' I-POST, PUNCH 8" & VARIOUS", W/8X32" SPADE @ 7' | ASTM A572 Gr. 50 |
| 10 | 7 | 0054.00050 | REG BB SHELF ANGLES @ 4-1/2" | ASTM A709 Gr. 50 |
| 13 | 8 | 0054.00563 | 6X8" TRANS. TUBE B/O @ 6" LG | A500 Gr. B |
| 17 | 1 | - | 6X6" BB TOP TRANS @ 14'-11 1/8" LG W/ TURNDOWN & 7' CONVEX RADIUS | A500 Gr. B |
| 18 | 1 | - | 6X6" BB BTM TRANS @ 14'-2 5/16" LG W/ 7' CONVEX RADIUS | A500 Gr. B |
| 19 | 7 | 0080.03355 | 3/8" X 7 1/2" BOLT, NUT, & 2 FW | A307, A563, F436 |
| 20 | 7 | 0080.04100 | 1/2" x 1-1/2" BOLT, NUT, & FW | A307, A563, F436 |
| 21 | 16 | 0080.04120 | 1/2" x 1-1/2" BOLT, NUT, & 2 FW | A307, A563, F436 |
| 23 | 4 | 0080.06340 | 3/4" X 7-1/2" BOLT, NUT, 2 FW | A325, A563, F436 |
| 23 | 4 | | 3/4" LOCK WASHER | ASME B18.21.1 |
| 24 | 8 | 0080.06370 | 3/4" X 8" CARR BOLT, NUT, FW & LW | A307, A563, F436 |

900.620 SPECIAL PROVISION (GUARDRAIL
ITEM #: APPROACH SECTION TO CONCRETE BRIDGE RAIL)

SHEET 2 OF 12

STRUCTURAL STEEL TO COMPLY W/ ASTM A6

TOLERANCE UNLESS OTHERWISE NOTED:
FRACTIONS = ± 1/16"
ANGLES = ± 1/2°
DIAMETERS = ± 1/32"

SPECIAL PROVISION, GRAS - CONCRETE COMBINATION BR.
ROUTE NO. T.H. 3 (CLASS 2), RURAL COLLECTOR, BRIDGE # 11
TOWN OF CLARENDON, RUTAND COUNTY, VT.

| R E V | NO. | DATE | DESCRIPTION | BY |
|---|---|---|---|---|
| E | 1 | 3/10/16 | REVISED PER 2/23/16 MARK-UP | E.P. |

| R E V | NO. | DATE | DESCRIPTION | BY |
|---|---|---|---|---|
| | | | | |


ELDERLEE, INC.
OAKS CORNERS, NEW YORK 14518
email: dlong@elderlee.com / epeek@elderlee.com
Tel: 315-789-6670 Fax: 315-789-6615


CERTIFIED FABRICATOR
ORTHOGRAPHIC PROJECTION

| | | |
|---|---|---|
| DRAWN | E.P. | 01/29/16 |
| CHECKED | D.L. | . |
| APPROVED | M.V. | . |
| SCALE | SCHEMATIC | |
| DRAWING NO. | FRL - CLARENDON - T | |

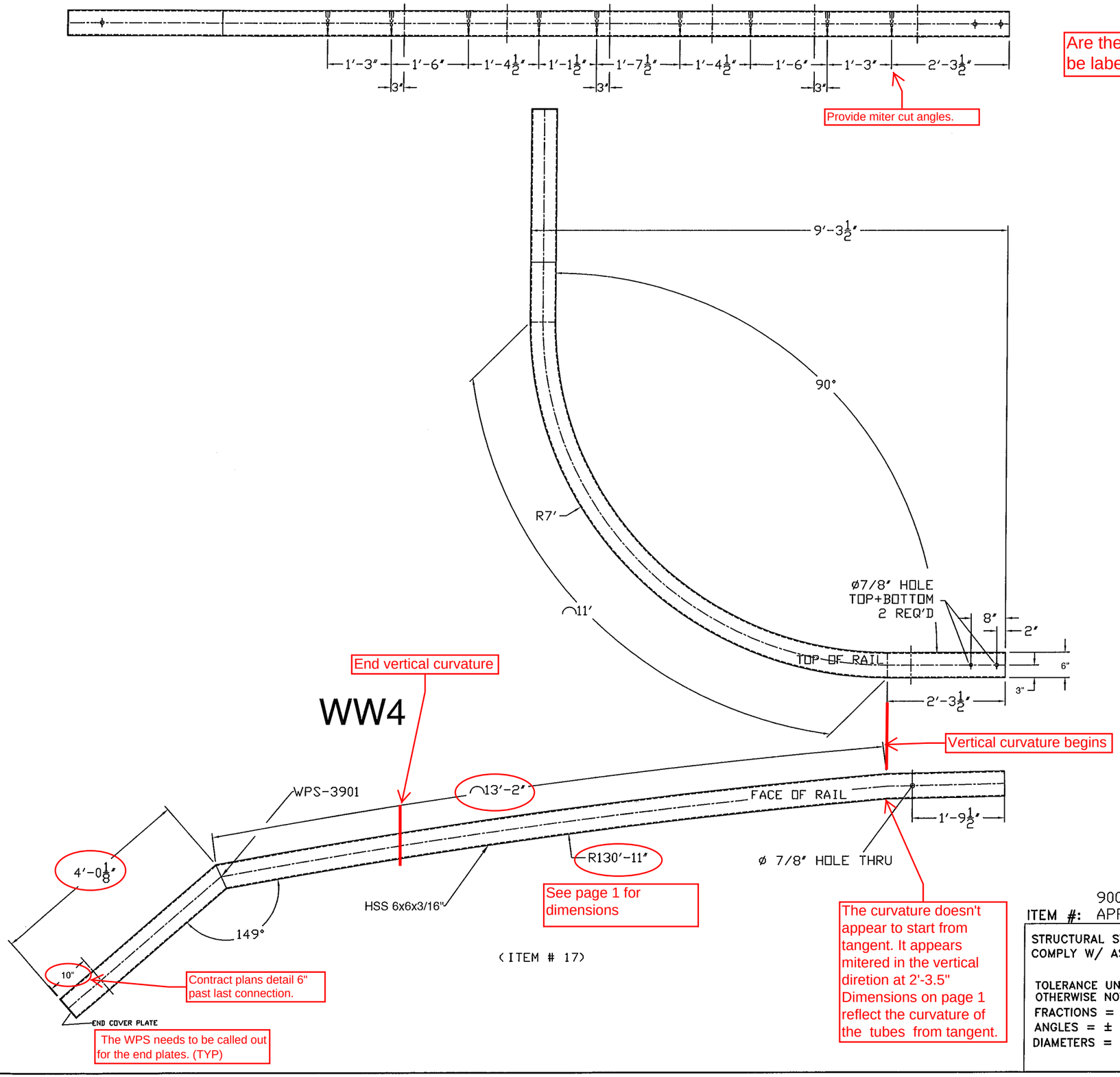


Are these pie cuts with welding? If so, this should be labeled and specify the WPS.

Vermont Agency of Transportation
RECEIVED
Clarendon BRO 1442(46) Approach Rail Submittal 3-10-16 3-21-2016.pdf
CK'D BY RF, SC OK'D BY G. Laroche
March 10, 2016
RESUBMIT Yes Rejected
BY K. Higgins DATE 03/22/2016

ITEM #: 900.620 SPECIAL PROVISION (GUARDRAIL APPROACH SECTION TO CONCRETE BRIDGE RAIL)

SHEET 3 OF 12

STRUCTURAL STEEL TO COMPLY W/ ASTM A6

TOLERANCE UNLESS OTHERWISE NOTED:
FRACTIONS = ± 1/16"
ANGLES = ± 1/2°
DIAMETERS = ± 1/32"

SPECIAL PROVISION, GRAS - CONCRETE COMBINATION BR.
ROUTE NO. T.H. 3 (CLASS 2), RURAL COLLECTOR, BRIDGE # 11
TOWN OF CLARENDON, RUTAND COUNTY, VT.

| REV | NO. | DATE | DESCRIPTION | BY | REV | NO. | DATE | DESCRIPTION | BY |
|---|---|---|---|---|---|---|---|---|---|
| | 1 | 3/10/16 | REVISED PER 2/23/16 MARK-UP | E.P. | | | | | |

ELDERLEE, INC.
OAKS CORNERS, NEW YORK 14518
email: dlong@elderlee.com / epeek@elderlee.com
Tel: 315-789-6670 Fax: 315-789-6615
AISC CERTIFIED FABRICATOR
ORTHOGRAPHIC PROJECTION

| | | |
|---|---|---|
| DRAWN | E.P. | 01/29/16 |
| CHECKED | D.L. | . |
| APPROVED | M.V. | . |
| SCALE | SCHEMATIC | |
| DRAWING NO. | FRL - CLARENDON - T | |

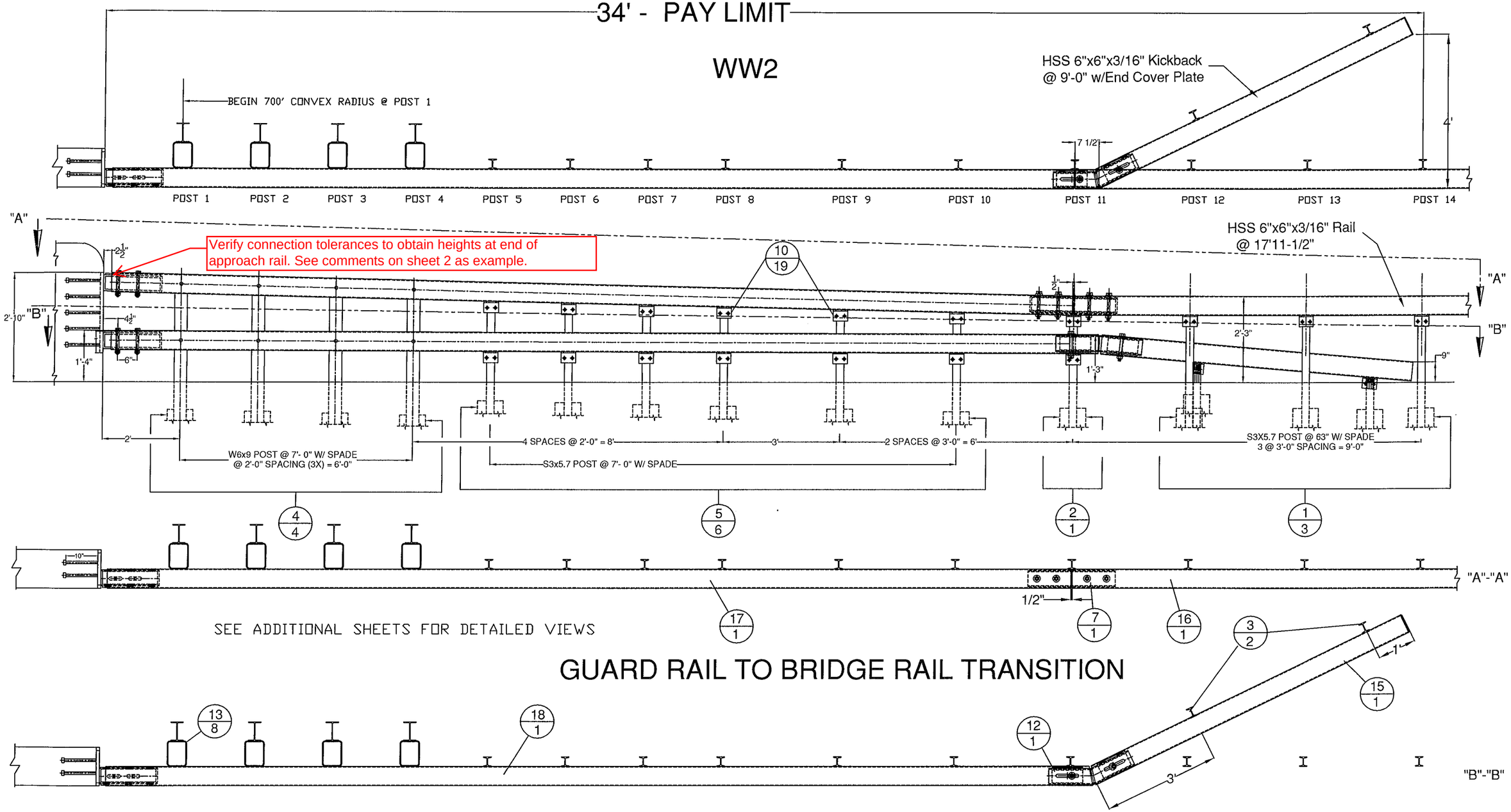


SEE ADDITIONAL SHEETS FOR DETAILED VIEWS

# GUARD RAIL TO BRIDGE RAIL TRANSITION

900.620 SPECIAL PROVISION (GUARDRAIL
ITEM #: APPROACH SECTION TO CONCRETE BRIDGE RAIL)

SHEET 4 OF 12

Vermont Agency of Transportation
RECEIVED
Clarendon BRO 1442(68) Approach Rail Submittal 3-10-16 3-21-2016.pdf

CK'D BY RF, SC OK'D BY G. Laroche

March 10, 2016

RESUBMIT Yes Rejected

BY K. Higgins DATE 03/22/2016

STRUCTURAL STEEL TO COMPLY W/ ASTM A6

TOLERANCE UNLESS OTHERWISE NOTED:
FRACTIONS = ± 1/16"
ANGLES = ± 1/2°
DIAMETERS = ± 1/32"

## SPECIAL PROVISION, GRAS - CONCRETE COMBINATION BR.

ROUTE NO. T.H. 3 (CLASS 2), RURAL COLLECTOR, BRIDGE # 11
TOWN OF CLARENDON, RUTAND COUNTY, VT.

| REV | NO. | DATE | DESCRIPTION | BY | REV | NO. | DATE | DESCRIPTION | BY |
|---|---|---|---|---|---|---|---|---|---|
| | 1 | 3/10/16 | REVISED PER 2/23/16 MARK-UP | E.P. | | | | | |


ELDERLEE, INC.
OAKS CORNERS, NEW YORK 14518
email: dlong@elderlee.com / epeek@elderlee.com
Tel: 315-789-6670 Fax: 315-789-6615


AISC CERTIFIED FABRICATOR

ORTHOGRAPHIC PROJECTION

| | | |
|---|---|---|
| DRAWN | E.P. | 01/29/16 |
| CHECKED | D.L. | . |
| APPROVED | M.V. | . |
| SCALE | SCHEMATIC | |
| DRAWING NO. | FRL - CLARENDON - T | |

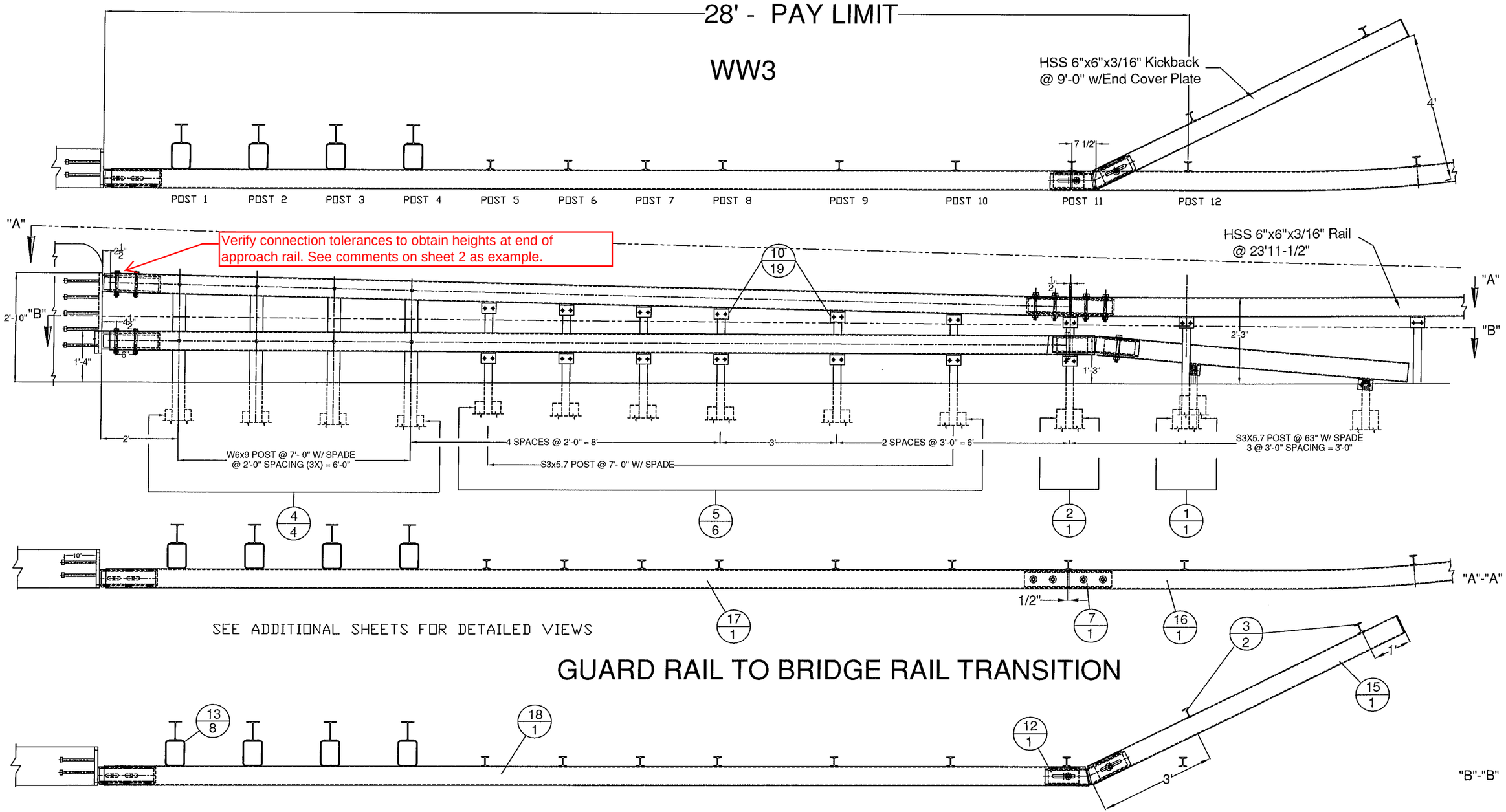


# GUARD RAIL TO BRIDGE RAIL TRANSITION

GENERAL NOTES:

1) ALL RAILING IS TO BE FABRICATED AND ERECTED ACCORDING TO SECTION 525 OF THE STANDARD SPECIFICATIONS.
2) BOLTS SHALL BE TORQUED SNUG TIGHT (APPROXIMATELY 100 FT-LB).
3) PROTRUSIONS CAUSED BY WELDING OR GALVANIZING ARE NOT PERMITTED ON THE ADJOINING SURFACES OF THE BOX BEAM RAILS, SPLICE TUBES AND FILL PLATES.
4) ANY BENDING OF RAIL SHALL BE DONE AT THE FABRICATION PLANT. RADII GREATER THAN 16' TO BE CURVED ON A TUBE BENDING MACHINE, RADII LESS THAN 16' TO BE "PIE CUT" AND WELDED. CURVED RAILING WILL HAVE AN 18" LENGTH ON EACH END STRAIGHT TO ACCOMADATE SPLICES. "PIE CUTS ARE LOCATED SO AS TO NOT CONFLICT WITH POST FASTENING HOLES. PIE CUTS WILL BE WELDED ACCORDING TO

Notes cut off

Vermont Agency of Transportation
RECEIVED
Clarendon BRO 1443(48) Approach Rail Submittal 3-10-16 3-21-2016.pdf

CK'D BY RF, SC OK'D BY G. Laroche
March 10, 2016
RESUBMIT Yes Rejected
BY K. Higgins DATE 03/22/2016

900.620 SPECIAL PROVISION (GUARDRAIL
ITEM #: APPROACH SECTION TO CONCRETE BRIDGE RAIL)

SHEET 5 OF 12

STRUCTURAL STEEL TO COMPLY W/ ASTM A6

TOLERANCE UNLESS OTHERWISE NOTED:
FRACTIONS = ± 1/16"
ANGLES = ± 1/2°
DIAMETERS = ± 1/32"

SPECIAL PROVISION, GRAS - CONCRETE COMBINATION BR.
ROUTE NO. T.H. 3 (CLASS 2), RURAL COLLECTOR, BRIDGE # 11
TOWN OF CLARENDON, RUTAND COUNTY, VT.

| REV | NO. | DATE | DESCRIPTION | BY |
|---|---|---|---|---|
| E | 1 | 3/10/16 | REVISED PER 2/23/16 MARK-UP | E.P. |
| V | | | | |

| REV | NO. | DATE | DESCRIPTION | BY |
|---|---|---|---|---|
| E | | | | |
| V | | | | |

ELDERLEE, INC.
OAKS CORNERS, NEW YORK 14518
email: dlong@elderlee.com / epeck@elderlee.com
Tel: 315-789-6670 Fax: 315-789-6615
AISC CERTIFIED FABRICATOR
ORTHOGRAPHIC PROJECTION

| | | |
|---|---|---|
| DRAWN | E.P. | 01/29/16 |
| CHECKED | D.L. | . |
| APPROVED | M.V. | . |
| SCALE | SCHEMATIC | |
| DRAWING NO. | FRL - CLARENDON - T | |

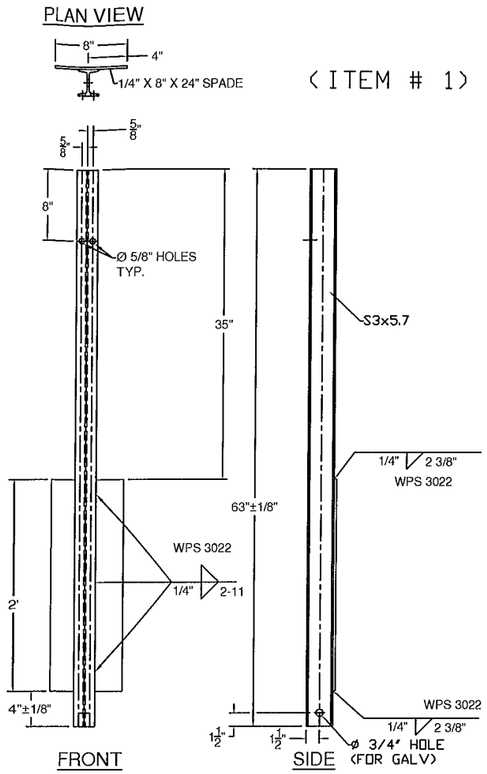


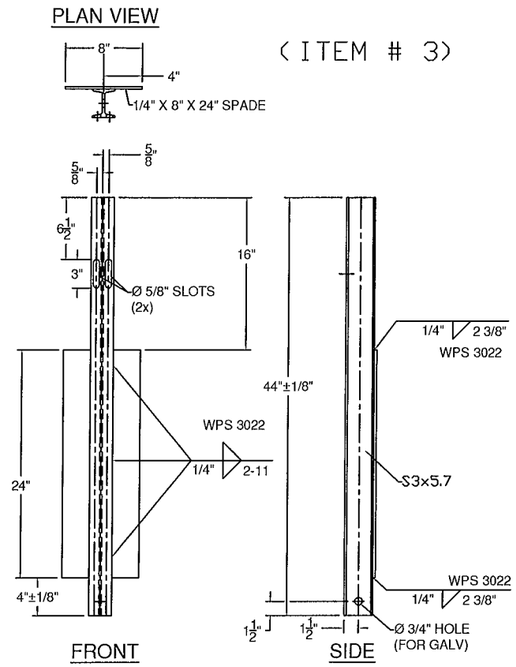


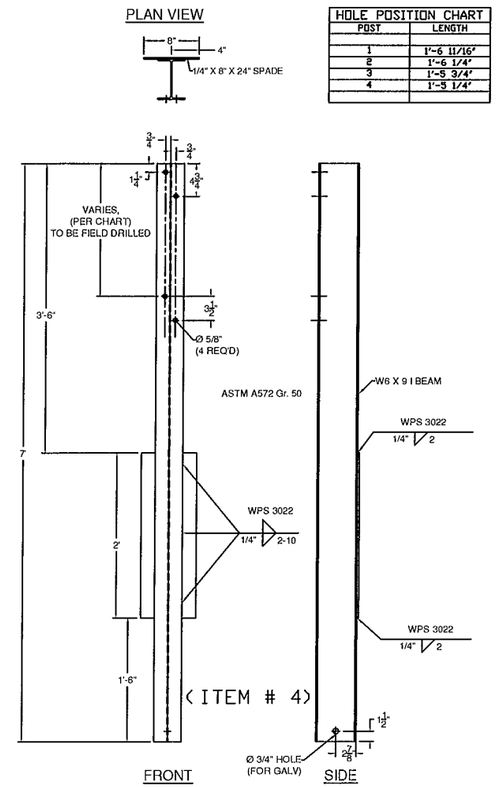


| HOLE POSITION CHART | |
|---|---|
| POST | LENGTH |
| 1 | 1'-6 11/16" |
| 2 | 1'-6 1/4" |
| 3 | 1'-5 3/4" |
| 4 | 1'-5 1/4" |

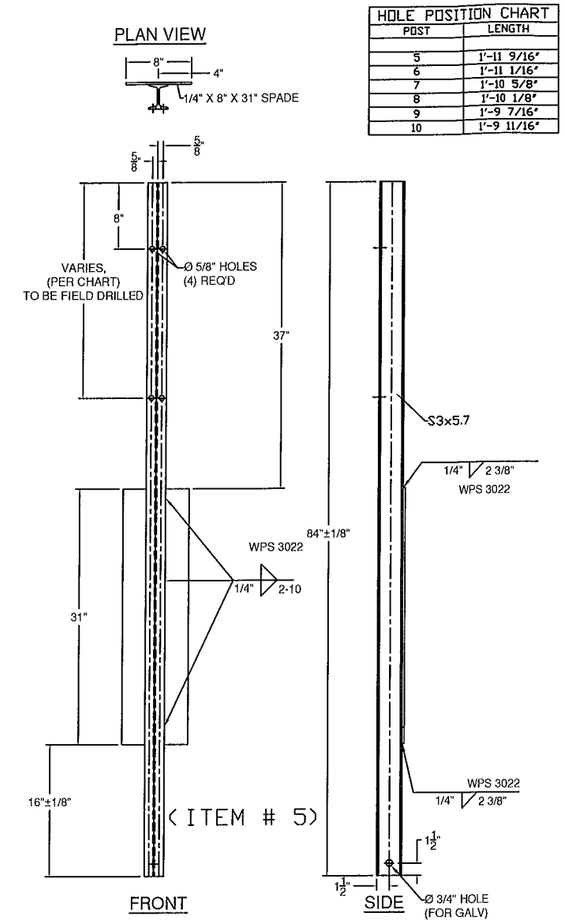


| HOLE POSITION CHART | |
|---|---|
| POST | LENGTH |
| 5 | 1'-11 9/16" |
| 6 | 1'-11 1/16" |
| 7 | 1'-10 5/8" |
| 8 | 1'-10 1/8" |
| 9 | 1'-9 7/16" |
| 10 | 1'-9 11/16" |

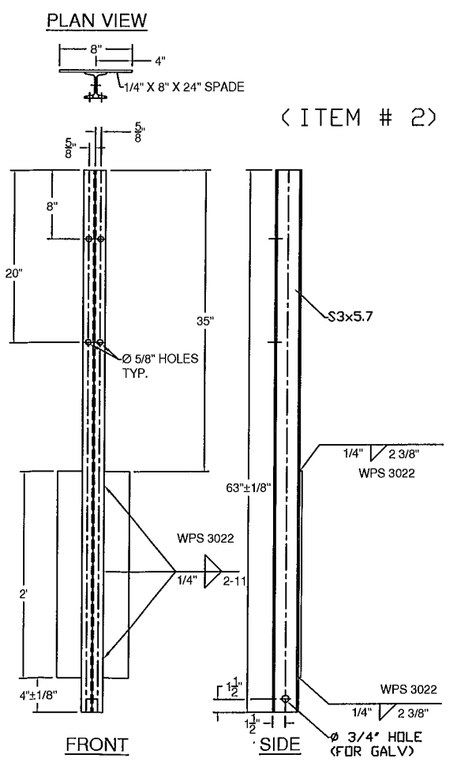


| BILL OF MATERIALS, WW2 | | | | |
|---|---|---|---|---|
| ITEM # | QTY. | COMPONENT # | DESCRIPTION | MATERIAL (ASTM) |
| 1 | 3 | 0013.57021 | 3" I-POST, PUNCH 8" W/SPD @ 63" LG | ASTM A572 Gr. 50 |
| 2 | 1 | 0013.57025 | 3" I-POST W/SPD @ 63", PUNCH 8", & 20" | ASTM A572 Gr. 50 |
| 3 | 2 | 0013.57060 | 3" I-END POST W/SPD @ 3'-8" LG | ASTM A572 Gr. 50 |
| 4 | 4 | - | W6X9 POST @ 7' W/SPD & Ø9/16" HOLES @ VARIOUS | ASTM A572 Gr. 50 |
| 5 | 6 | - | 3" I-POST, PUNCH 8" & VARIOUS", W/8X32" SPADE @ 7' | ASTM A572 Gr. 50 |
| 7 | 1 | 0033.00640 | HSS 5X5 BENT TUBE SPLICE @ 27" LG W/ 1/4" SHIMS | A500 Gr. B / A572 Gr 50 |
| 10 | 19 | 0054.00050 | REG BB SHELF ANGLES @ 4-1/2" | ASTM A709 Gr. 50 |
| 12 | 1 | 0054.00074 | HSS 5X5 DBL BEND TUBE SPL @ 26 3/4" LG - 25° ANGLE | A500 Gr. B / A572 Gr 50 |
| 13 | 8 | 0054.00563 | 6X8" TRANS. TUBE B/Ø @ 6" LG | A500 Gr. B |
| 15 | 1 | 0054.09000 | 6X6" BB @ 9'-0" KICKBACK, W/ CAP & 13° ANGLE | A500 Gr. B / A36 |
| 16 | 1 | - | 6X6" BB @ 17'-11 1/2", DRILL 3" CC (W/ 700" CONVEX RAD.) | A500 Gr. B |
| 17 | 1 | - | 6X6" BB TOP TRANS @ 24'-9 5/16" LG (W/ 700" CONVEX RAD.) | A500 Gr. B |
| 18 | 1 | - | 6X6" BB BTM TRANS @ 25'-5" LG (W/700" CONVEX RAD.) | A500 Gr. B |
| 19 | 19 | 0080.03355 | 3/8" X 7 1/2" BOLT, NUT, & 2 FW | A307, A563, F436 |
| 20 | 19 | 0080.04100 | 1/2" x 1-1/2" BOLT, NUT, & FW | A307, A563, F436 |
| 21 | 16 | 0080.04120 | 1/2" x 1-1/2" BOLT, NUT, & 2 FW | A307, A563, F436 |
| 23 | 10 | 0080.06340 | 3/4" X 7-1/2" BOLT, NUT, 2 FW | A325, A563, F436 |
| 23 | 8 | | 3/4" LOCK WASHER | ASME B18.21.1 |
| 24 | 8 | 0080.06370 | 3/4" X 8" CARR BOLT, NUT, FW & LW | A307, A563, F436 |

| BILL OF MATERIALS, WW3 | | | | |
|---|---|---|---|---|
| ITEM # | QTY. | COMPONENT # | DESCRIPTION | MATERIAL (ASTM) |
| 1 | 1 | 0013.57021 | 3" I-POST, PUNCH 8" W/SPD @ 63" LG | ASTM A572 Gr. 50 |
| 2 | 1 | 0013.57025 | 3" I-POST W/SPD @ 63", PUNCH 8", & 20" | ASTM A572 Gr. 50 |
| 3 | 2 | 0013.57060 | 3" I-END POST W/SPD @ 3'-8" LG | ASTM A572 Gr. 50 |
| 4 | 4 | - | W6X9 POST @ 7' W/SPD & Ø9/16" HOLES @ VARIOUS | ASTM A572 Gr. 50 |
| 5 | 6 | - | 3" I-POST, PUNCH 8" & VARIOUS", W/8X31" SPADE @ 7' | ASTM A572 Gr. 50 |
| 7 | 1 | 0033.00640 | HSS 5X5 BENT TUBE SPLICE @ 27" LG W/ 1/4" SHIMS | A500 Gr. B / A572 Gr 50 |
| 10 | 19 | 0054.00050 | REG BB SHELF ANGLES @ 4-1/2" | ASTM A709 Gr. 50 |
| 12 | 1 | 0054.00074 | HSS 5X5 DBL BEND TUBE SPL @ 26 3/4" LG - 27° ANGLE | A500 Gr. B / A572 Gr 50 |
| 13 | 8 | 0054.00563 | 6X8" TRANS. TUBE B/Ø @ 6" LG | A500 Gr. B |
| 15 | 1 | 0054.09000 | 6X6" BB @ 9'-0" KICKBACK, W/ CAP & 13° ANGLE | A500 Gr. B / A36 |
| 16 | 1 | 0054.18000 | 6X6" BB @ 23'-11 1/2", DRILL 3" CC | A500 Gr. B |
| 17 | 1 | - | 6X6" BB TOP TRANS @ 24'-9 5/16" LG | A500 Gr. B |
| 18 | 1 | - | 6X6" BB BTM TRANS @ 25'-5" LG | A500 Gr. B |
| 19 | 17 | 0080.03355 | 3/8" X 7 1/2" BOLT, NUT, & 2 FW | A307, A563, F436 |
| 20 | 17 | 0080.04100 | 1/2" x 1-1/2" BOLT, NUT, & FW | A307, A563, F436 |
| 21 | 16 | 0080.04120 | 1/2" x 1-1/2" BOLT, NUT, & 2 FW | A307, A563, F436 |
| 23 | 10 | 0080.06340 | 3/4" X 7-1/2" BOLT, NUT, 2 FW | A325, A563, F436 |
| 23 | 8 | | 3/4" LOCK WASHER | ASME B18.21.1 |
| 24 | 8 | 0080.06370 | 3/4" X 8" CARR BOLT, NUT, FW & LW | A307, A563, F436 |

| HARDWARE NOTES | |
|---|---|
| ITEM # | FUNCTION |
| 19 | BOLT RAIL TO SHELF ANGLE (ITEM #10) |
| 20 | BOLT SHELF ANGLE (ITEM # 10) TO POST |
| 21 | BOLT BLOCK-OUTS (ITEM # 13) TO HEAVY POST (ITEM # 4) |
| 23 | SPLICE TUBING (ITEM #'S 7 & 12), & (4) PER PARAPET WALL CONNECTION |
| 24 | BOLT RAIL (ITEMS #'S 17, & 18 TO BLOCK-OUTS (ITEM # 13) |

Vermont Agency of Transportation
RECEIVED
Clarendon BRO 14A(8) Approach Rail Submittal 3-10-16 3-22-2016.pdf

CK'D BY RF, SC OK'D BY G. Laroche

March 10, 2016

RESUBMIT Yes Rejected
BY K. Higgins DATE 03/22/2016

900.620 SPECIAL PROVISION (GUARDRAIL
ITEM #: APPROACH SECTION TO CONCRETE BRIDGE RAIL)

SHEET 6 OF 12

STRUCTURAL STEEL TO COMPLY W/ ASTM A6

TOLERANCE UNLESS OTHERWISE NOTED:
FRACTIONS = ± 1/16"
ANGLES = ± 1/2°
DIAMETERS = ± 1/32"

# SPECIAL PROVISION, GRAS - CONCRETE COMBINATION BR.

ROUTE NO. T.H. 3 (CLASS 2), RURAL COLLECTOR , BRIDGE # 11
TOWN OF CLARENDON, RUTAND COUNTY, VT.

| R E V | NO. | DATE | DESCRIPTION | BY | R E V | NO. | DATE | DESCRIPTION | BY |
|---|---|---|---|---|---|---|---|---|---|
| | 1 | 3/10/16 | REVISED PER 2/23/16 MARK-UP | E.P. | | | | | |

ELDERLEE, INC.
OAKS CORNERS, NEW YORK 14518
email: dlong@elderlee.com / epeek@elderlee.com
Tel: 315-789-6670 Fax: 315-789-6615

CERTIFIED FABRICATOR
ORTHOGRAPHIC PROJECTION

| | | |
|---|---|---|
| DRAWN | E.P. | 01/29/16 |
| CHECKED | D.L. | |
| APPROVED | M.V. | . |
| SCALE | SCHEMATIC | |
| DRAWING NO. | FRL - CLARENDON - T | |

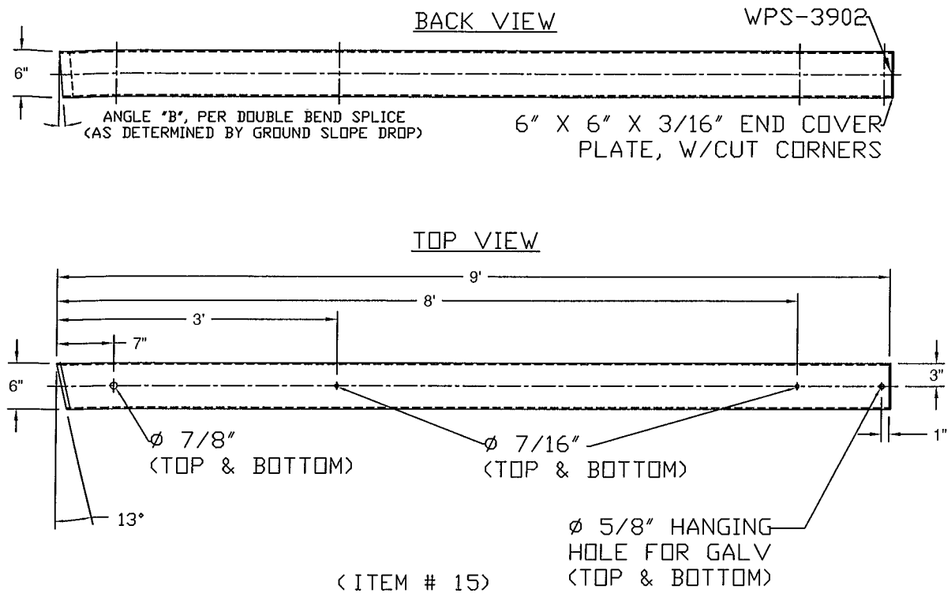


(ITEM # 15)

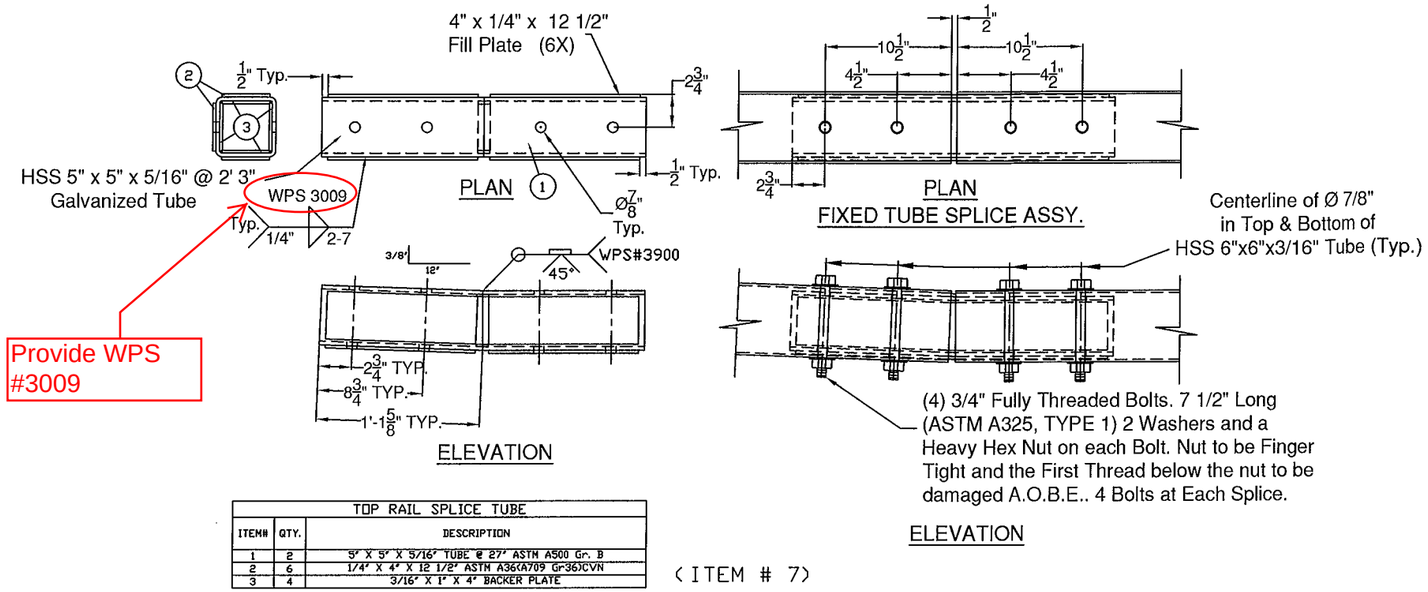


Provide WPS #3009

| TOP RAIL SPLICE TUBE | | |
|---|---|---|
| ITEM# | QTY. | DESCRIPTION |
| 1 | 2 | 5" X 5" X 5/16" TUBE @ 27" ASTM A500 Gr. B |
| 2 | 6 | 1/4" X 4" X 12 1/2" ASTM A36(A709 Gr36)CVN |
| 3 | 4 | 3/16" X 1" X 4" BACKER PLATE |

(ITEM # 7)

Provide WPS #3016

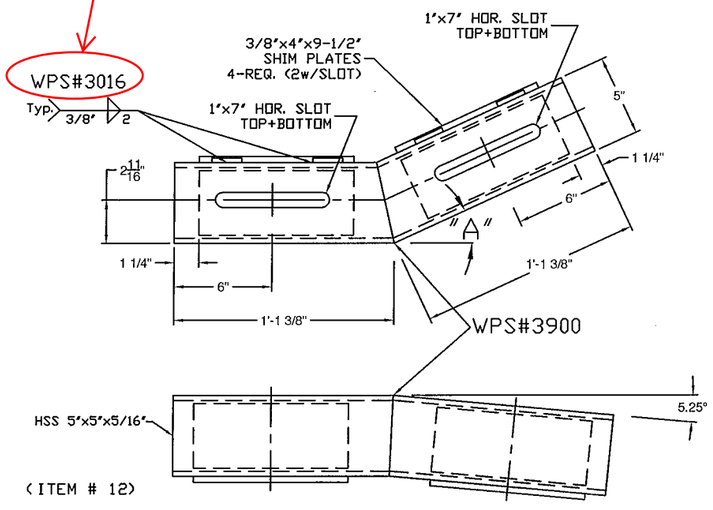


(ITEM # 12)

"A" - WW2 - 25°
WW3 - 27°

Does not fit up to post hole dimensions on page 1

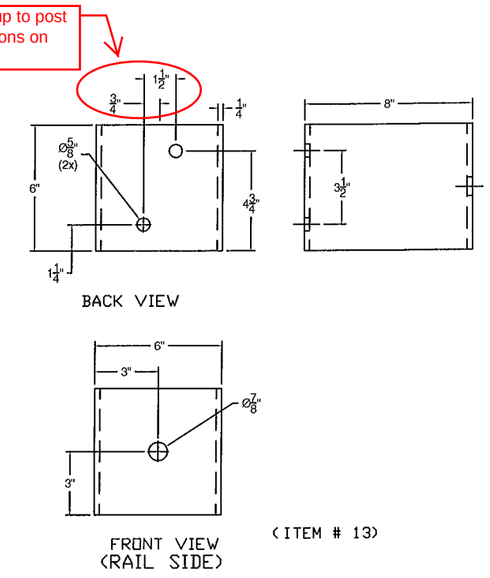


(ITEM # 13)

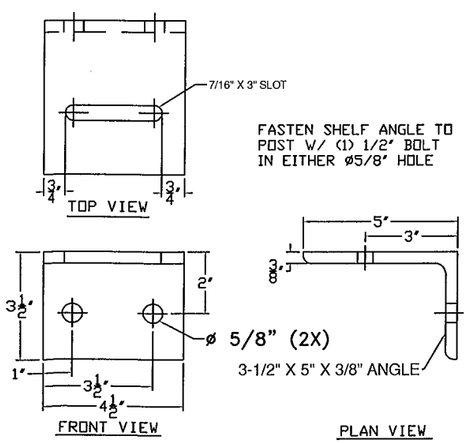


(ITEM # 10)

Vermont Agency of Transportation
RECEIVED
Clarendon BRO 1442(48) Approach Rail Submittal 3-10-16 3-21-2016.pdf

CK'D BY RF, SC OK'D BY G. Laroche

March 10, 2016

RESUBMIT Yes Rejected

BY K. Higgins DATE 03/22/2016

ITEM #: 900.620 SPECIAL PROVISION (GUARDRAIL APPROACH SECTION TO CONCRETE BRIDGE RAIL)

SHEET 7 OF 12

STRUCTURAL STEEL TO COMPLY W/ ASTM A6

TOLERANCE UNLESS OTHERWISE NOTED:
FRACTIONS = ± 1/16"
ANGLES = ± 1/2°
DIAMETERS = ± 1/32"

# SPECIAL PROVISION, GRAS - CONCRETE COMBINATION BR.

ROUTE NO. T.H. 3 (CLASS 2), RURAL COLLECTOR, BRIDGE # 11
TOWN OF CLARENDON, RUTAND COUNTY, VT.

| REV | NO. | DATE | DESCRIPTION | BY |
|---|---|---|---|---|
| | 1 | 3/10/16 | REVISED PER 2/23/16 MARK-UP | E.P. |

| REV | NO. | DATE | DESCRIPTION | BY |
|---|---|---|---|---|
| | | | | |

ELDERLEE, INC.
OAKS CORNERS, NEW YORK 14518
email: dlong@elderlee.com / epeek@elderlee.com
Tel: 315-789-6670 Fax: 315-789-6615

AISC CERTIFIED FABRICATOR
ORTHOGRAPHIC PROJECTION

| | | |
|---|---|---|
| DRAWN | E.P. | 01/29/16 |
| CHECKED | D.L. | |
| APPROVED | M.V. | |
| SCALE | SCHEMATIC | |
| DRAWING NO. | FRL - CLARENDON - T | |

Provide miter cut angles

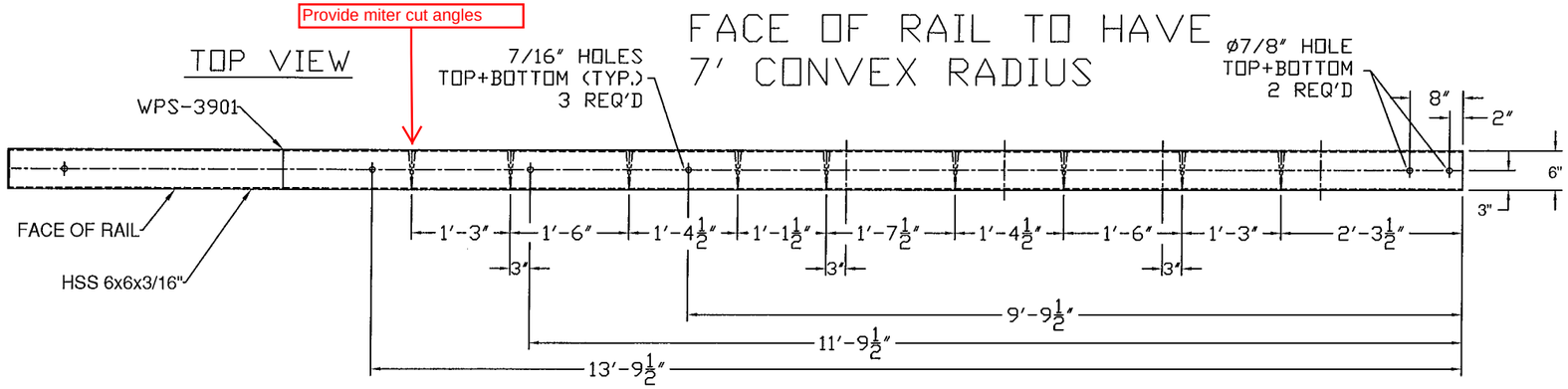


Are these pie cuts with welding? If so, this should be labeled and specify the WPS.

# WW1

Contract plans detail 6" past last connection. See the box beam detail sheet. Page 25 of 59 of the contract plans.

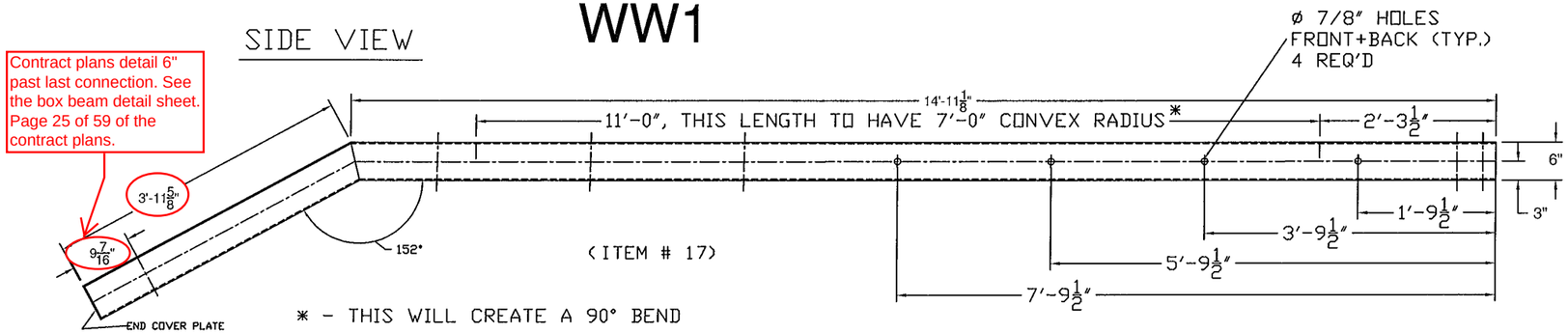


Provide miter cut angles

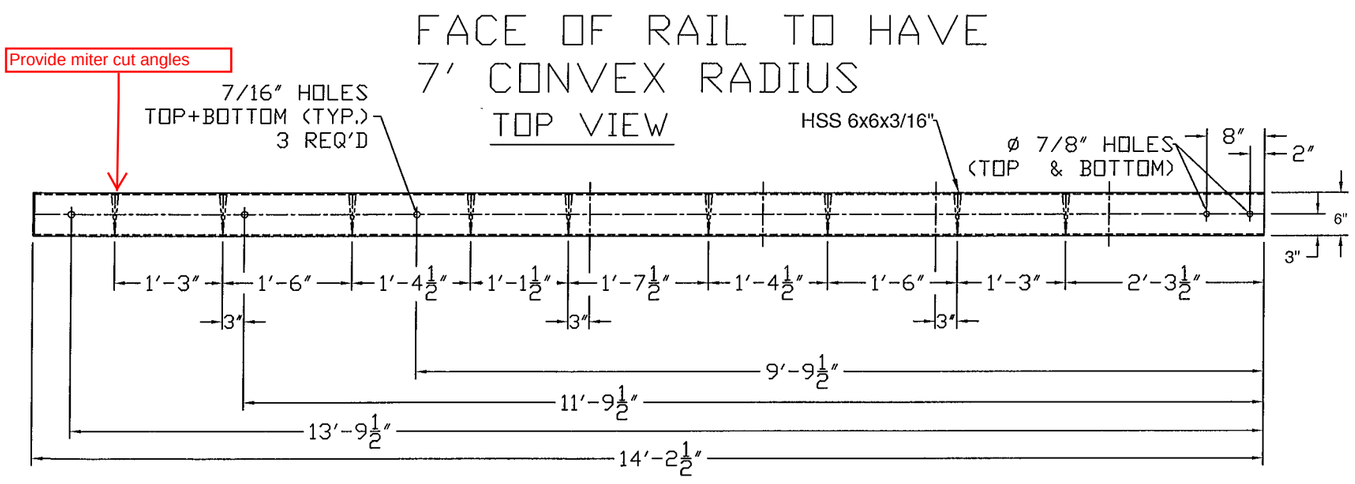


Are these pie cuts with welding? If so, this should be labeled and specify the WPS.

# WW1

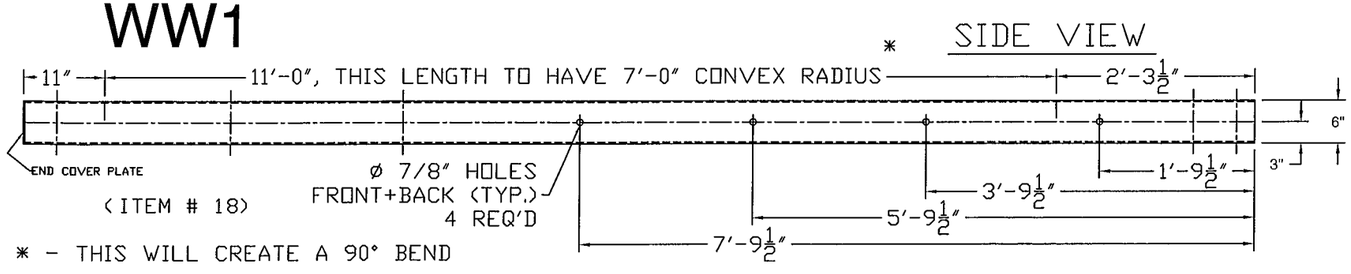


Vermont Agency of Transportation
RECEIVED
Clarendon BRO 1442(48) Approach Rail Submittal 3-10-16 3-21-2016.pdf

CK'D BY RF, SC OK'D BY G. Laroche

March 10, 2016

RESUBMIT Yes Rejected

BY K. Higgins DATE 03/22/2016

ITEM #: 900.620 SPECIAL PROVISION (GUARDRAIL APPROACH SECTION TO CONCRETE BRIDGE RAIL)

SHEET 8 OF 12

STRUCTURAL STEEL TO COMPLY W/ ASTM A6

TOLERANCE UNLESS OTHERWISE NOTED:
FRACTIONS = ± 1/16"
ANGLES = ± 1/2°
DIAMETERS = ± 1/32"

SPECIAL PROVISION, GRAS - CONCRETE COMBINATION BR.

ROUTE NO. T.H. 3 (CLASS 2), RURAL COLLECTOR, BRIDGE # 11
TOWN OF CLARENDON, RUTAND COUNTY, VT.

| REV | NO. | DATE | DESCRIPTION | BY | REV | NO. | DATE | DESCRIPTION | BY |
|---|---|---|---|---|---|---|---|---|---|
| | 1 | 3/10/16 | REVISED PER 2/23/16 MARK-UP | E.P. | | | | | |


ELDERLEE, INC.
OAKS CORNERS, NEW YORK 14518
email: dlong@elderlee.com / epeek@elderlee.com
Tel: 315-789-6670 Fax: 315-789-6615


AISC CERTIFIED FABRICATOR

ORTHOGRAPHIC PROJECTION

| | | |
|---|---|---|
| DRAWN | E.P. | 01/29/16 |
| CHECKED | D.L. | |
| APPROVED | M.V. | |
| SCALE | SCHEMATIC | |
| DRAWING NO. | FRL - CLARENDON - T | |

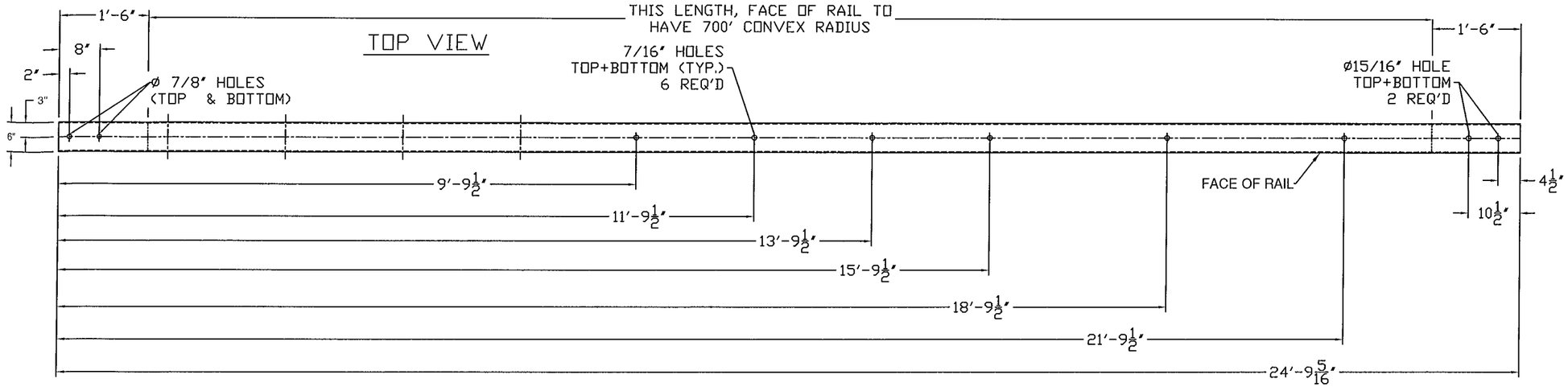


# WW2

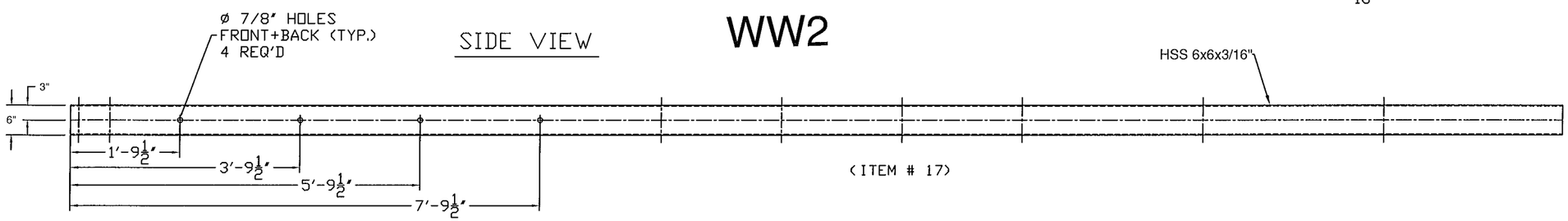


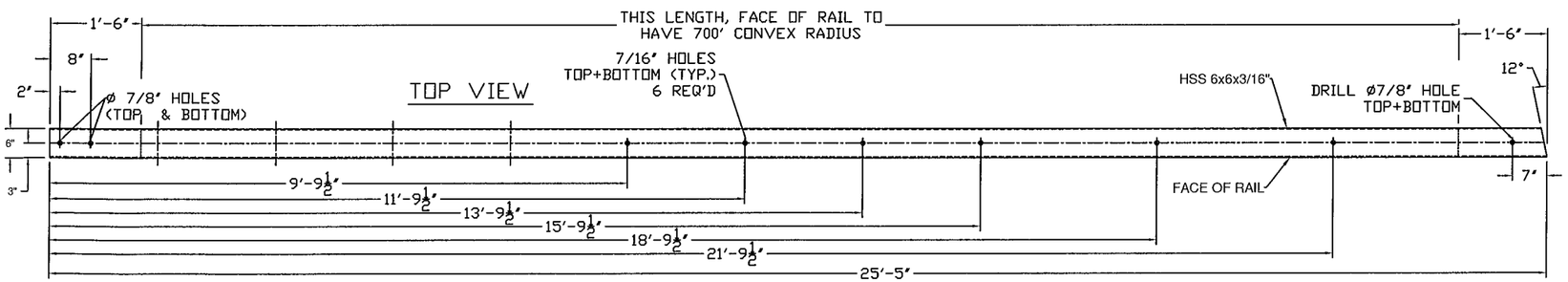


# WW 2

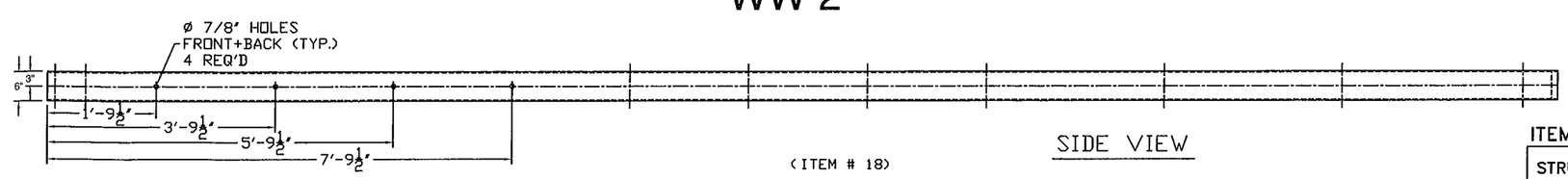


Vermont Agency of Transportation
RECEIVED
Clarendon BRO 1442(48) Approach Rail Submittal 3-10-16 3-21-2016.pdf

CK'D BY RF, SC OK'D BY G. Laroche

March 10, 2016

RESUBMIT Yes Rejected

BY K. Higgins DATE 03/22/2016

900.620 SPECIAL PROVISION (GUARDRAIL
ITEM #: APPROACH SECTION TO CONCRETE BRIDGE RAIL)

SHEET 9 OF 12

STRUCTURAL STEEL TO COMPLY W/ ASTM A6

TOLERANCE UNLESS OTHERWISE NOTED:
FRACTIONS = ± 1/16"
ANGLES = ± 1/2°
DIAMETERS = ± 1/32"

SPECIAL PROVISION, GRAS - CONCRETE COMBINATION BR.
ROUTE NO. T.H. 3 (CLASS 2), RURAL COLLECTOR, BRIDGE # 11
TOWN OF CLARENDON, RUTAND COUNTY, VT.

| REV | NO. | DATE | DESCRIPTION | BY | REV | NO. | DATE | DESCRIPTION | BY |
|---|---|---|---|---|---|---|---|---|---|
| | 1 | 3/10/16 | REVISED PER 2/23/16 MARK-UP | E.P. | | | | | |

ELDERLEE, INC.
OAKS CORNERS, NEW YORK 14518
email: dlong@elderlee.com / epeek@elderlee.com
Tel: 315-789-6670 Fax: 315-789-6615

AISC CERTIFIED FABRICATOR

ORTHOGRAPHIC PROJECTION

| | | |
|---|---|---|
| DRAWN | E.P. | 01/29/16 |
| CHECKED | D.L. | |
| APPROVED | M.V. | . |
| SCALE | SCHEMATIC | |
| DRAWING NO. | FRL - CLARENDON - T | |

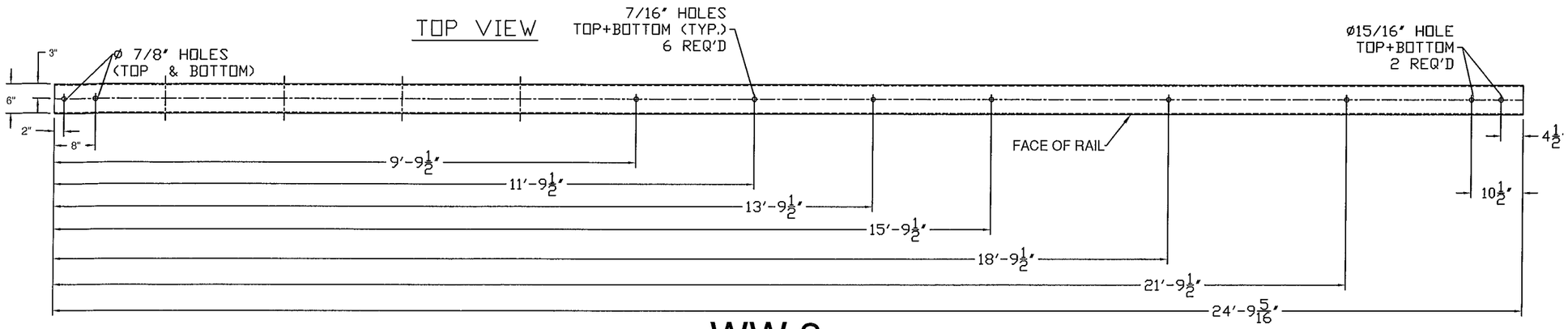


WW 3

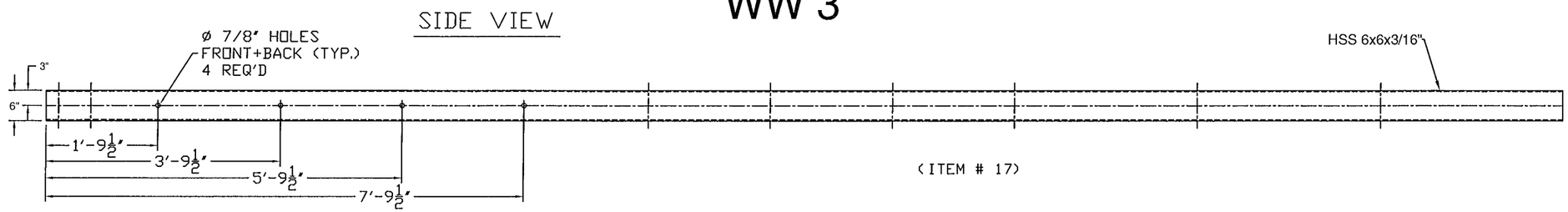


(ITEM # 17)

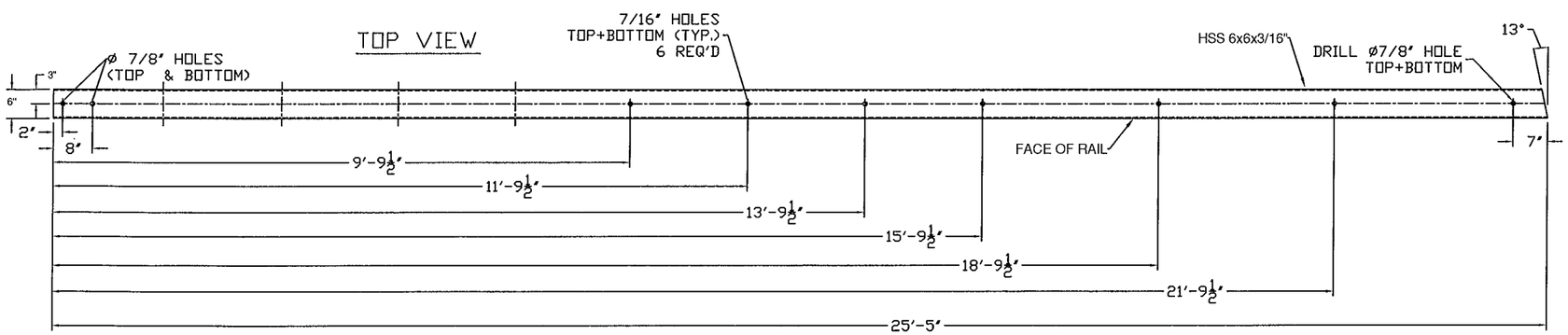


WW 3

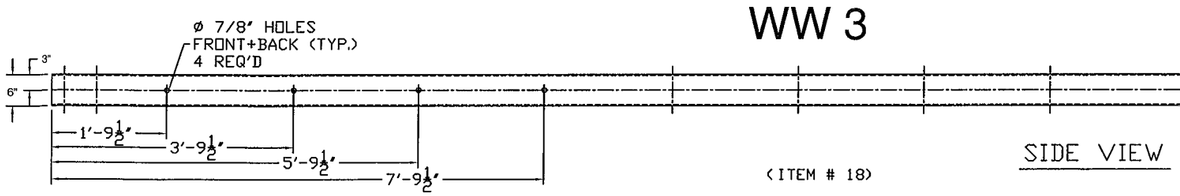


(ITEM # 18)

SIDE VIEW

Vermont Agency of Transportation
RECEIVED
Clarendon BRO 1442(48) Approach Rail Submitted 3-10-16 3-21-2016.pdf

CK'D BY RF, SC OK'D BY G. Laroche

March 10, 2016

RESUBMIT Yes Rejected

BY K. Higgins DATE 03/22/2016

900.620 SPECIAL PROVISION (GUARDRAIL
ITEM #: APPROACH SECTION TO CONCRETE BRIDGE RAIL)

SHEET 10 OF 12

STRUCTURAL STEEL TO COMPLY W/ ASTM A6

TOLERANCE UNLESS OTHERWISE NOTED:
FRACTIONS = ± 1/16"
ANGLES = ± 1/2°
DIAMETERS = ± 1/32"

SPECIAL PROVISION, GRAS - CONCRETE COMBINATION BR.
ROUTE NO. T.H. 3 (CLASS 2), RURAL COLLECTOR, BRIDGE # 11
TOWN OF CLARENDON, RUTAND COUNTY, VT.

| REV | NO. | DATE | DESCRIPTION | BY | REV | NO. | DATE | DESCRIPTION | BY |
|---|---|---|---|---|---|---|---|---|---|
| | 1 | 3/10/16 | REVISED PER 2/23/16 MARK-UP | E.P. | | | | | |

ELDERLEE, INC.
OAKS CORNERS, NEW YORK 14518
email: dlong@elderlee.com / epeek@elderlee.com
Tel: 315-789-6670 Fax: 315-789-6615

AISC CERTIFIED FABRICATOR

ORTHOGRAPHIC PROJECTION

| | | |
|---|---|---|
| DRAWN | E.P. | 01/29/16 |
| CHECKED | D.L. | |
| APPROVED | M.V. | . |
| SCALE | SCHEMATIC | |
| DRAWING NO. | FRL - CLARENDON - T | |

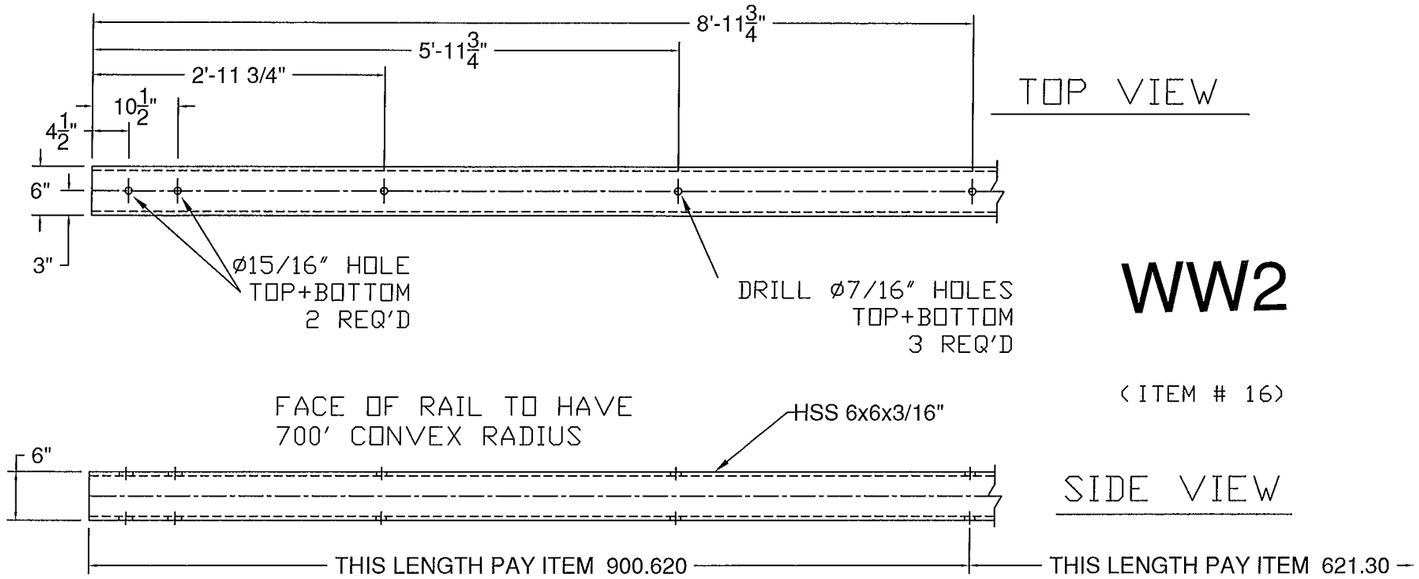


# WW2

(ITEM # 16)

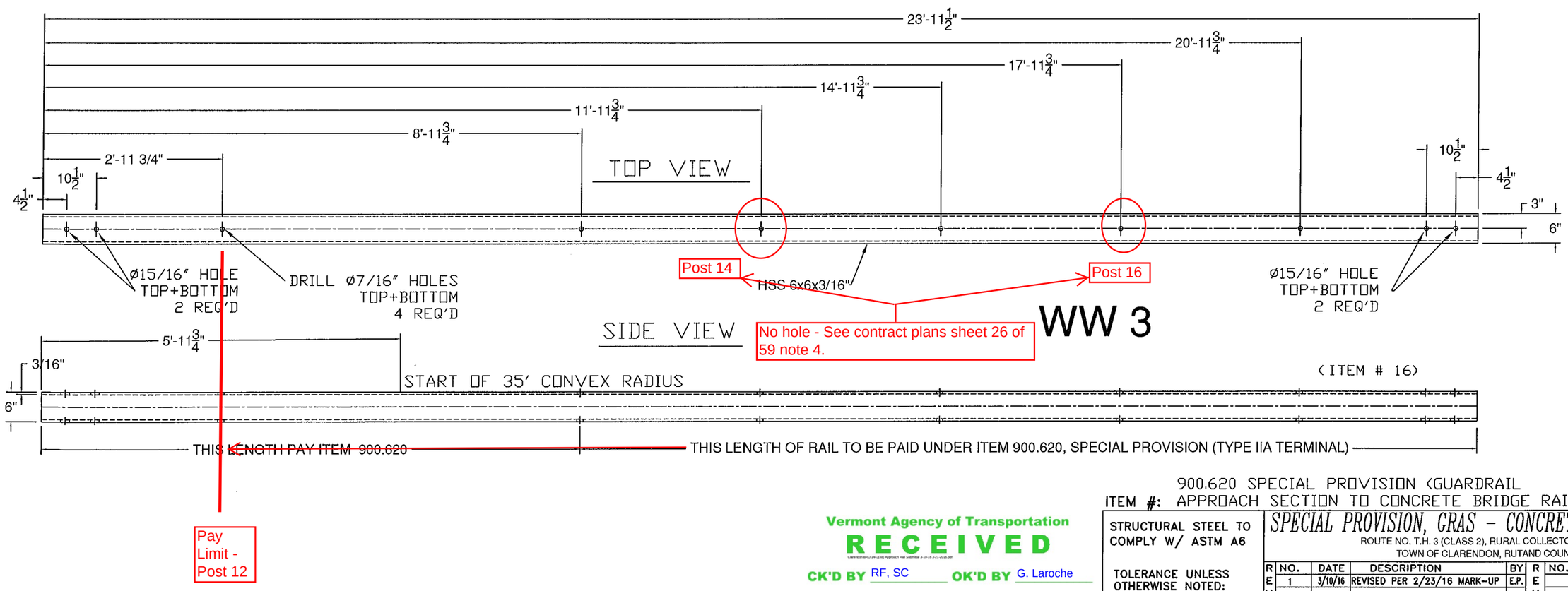


# WW 3

(ITEM # 16)

Vermont Agency of Transportation
RECEIVED
Clarendon BRO 1442(48) Approach Rail Submittal 3-10-16 3-21-2016.pdf

CK'D BY RF, SC OK'D BY G. Laroche

March 10, 2016

RESUBMIT Yes Rejected

BY K. Higgins DATE 03/22/2016

900.620 SPECIAL PROVISION (GUARDRAIL
ITEM #: APPROACH SECTION TO CONCRETE BRIDGE RAIL)

SHEET 11 OF 12

STRUCTURAL STEEL TO COMPLY W/ ASTM A6

TOLERANCE UNLESS OTHERWISE NOTED:
FRACTIONS = ± 1/16"
ANGLES = ± 1/2°
DIAMETERS = ± 1/32"

## SPECIAL PROVISION, GRAS - CONCRETE COMBINATION BR.

ROUTE NO. T.H. 3 (CLASS 2), RURAL COLLECTOR, BRIDGE # 11
TOWN OF CLARENDON, RUTAND COUNTY, VT.

| REV | NO. | DATE | DESCRIPTION | BY | REV | NO. | DATE | DESCRIPTION | BY |
|---|---|---|---|---|---|---|---|---|---|
| | 1 | 3/10/16 | REVISED PER 2/23/16 MARK-UP | E.P. | | | | | |


ELDERLEE, INC.
OAKS CORNERS, NEW YORK 14518
email: dlong@elderlee.com / epeek@elderlee.com
Tel: 315-789-6670 Fax: 315-789-6615


AISC CERTIFIED FABRICATOR

ORTHOGRAPHIC PROJECTION

| | | |
|---|---|---|
| DRAWN | E.P. | 01/29/16 |
| CHECKED | D.L. | |
| APPROVED | M.V. | |
| SCALE | SCHEMATIC | |
| DRAWING NO. | FRL - CLARENDON - T | |

# WW 3

(ITEM # 16)

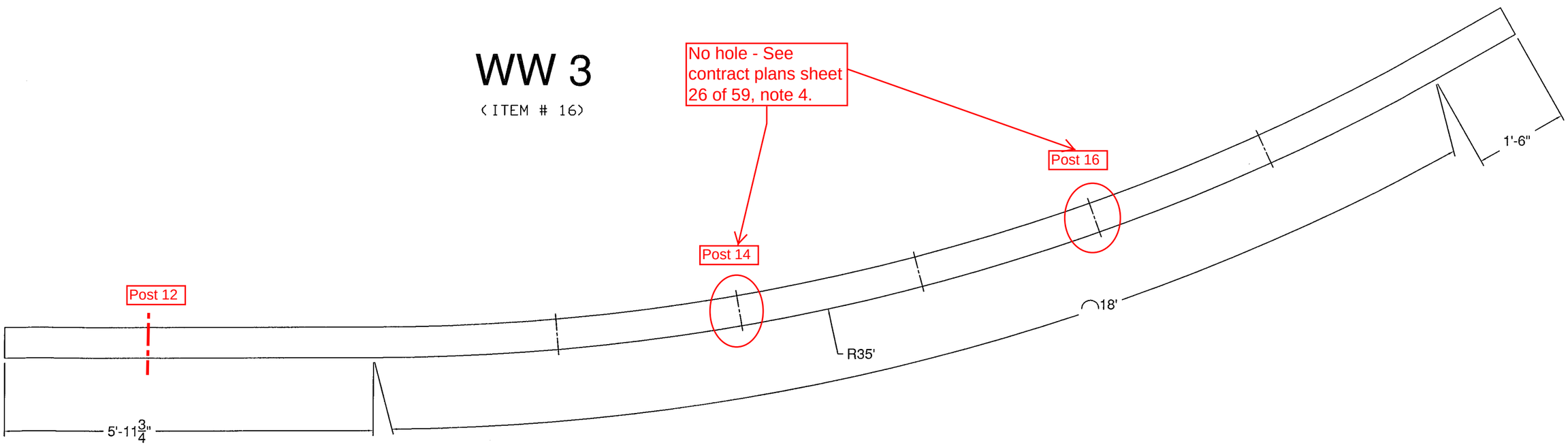


900.620 SPECIAL PROVISION (GUARDRAIL
ITEM #: APPROACH SECTION TO CONCRETE BRIDGE RAIL)

SHEET 12 OF 12

Vermont Agency of Transportation
RECEIVED
Clarendon BRO 1442(49) Approach Rail Submittal 3-10-16 3-21-2016.pdf

CK'D BY RF, SC OK'D BY G. Laroche

March 10, 2016

RESUBMIT Yes Rejected

BY K. Higgins DATE 03/22/2016

STRUCTURAL STEEL TO COMPLY W/ ASTM A6

TOLERANCE UNLESS OTHERWISE NOTED:
FRACTIONS = ± 1/16"
ANGLES = ± 1/2°
DIAMETERS = ± 1/32"

## SPECIAL PROVISION, GRAS - CONCRETE COMBINATION BR.

ROUTE NO. T.H. 3 (CLASS 2), RURAL COLLECTOR , BRIDGE # 11
TOWN OF CLARENDON, RUTAND COUNTY, VT.

| REV | NO. | DATE | DESCRIPTION | BY | REV | NO. | DATE | DESCRIPTION | BY |
|---|---|---|---|---|---|---|---|---|---|
| | 1 | 3/10/16 | REVISED PER 2/23/16 MARK-UP | E.P. | | | | | |


ELDERLEE, INC.
OAKS CORNERS, NEW YORK 14518
email: dlong@elderlee.com / epeek@elderlee.com
Tel: 315-789-6670 Fax: 315-789-6615


CERTIFIED FABRICATOR

ORTHOGRAPHIC PROJECTION

| | | |
|---|---|---|
| DRAWN | E.P. | 01/29/16 |
| CHECKED | D.L. | |
| APPROVED | M.V. | . |
| SCALE | SCHEMATIC | |
| DRAWING NO. | FRL - CLARENDON - T | |

Vermont Agency of Transportation
RECEIVED
Clarendon BRO 1443(48) Approach Rail Submittal 3-10-16 3-21-2016.pdf
CK'D BY RF, SC OK'D BY G. Laroche
March 10, 2016
RESUBMIT Yes Rejected
BY K. Higgins DATE 03/22/2016

WPS portion of this submittal is incomplete. Please provide WPS as referenced within the shop drawings.

## WELDING PROCEDURE SPECIFICATION

PQR ELDERLEE #3

| | |
|---|---|
| Material Specification | ASTM A500 TO A36 |
| Welding Process | FCAW-G |
| Manual or Machine | SEMAUTOMATIC |
| Position of Welding | FLAT/HORIZONTAL |
| Filler Metal Specification | A5.29 |
| Filler Metal Classification | E81T1-Ni1C-JH4 |
| Flux | N/A |
| Shielding Gas | CO 2 Dew Point -40DEG F Flow Rate 50CFH |
| Single or Multiple Pass | SINGLE |
| Single or Multiple Arc | SINGLE |
| Welding Current | DC |
| Polarity | REVERSE ELECTRODE POSITIVE |
| Welding Progression | STRINGER |
| Root Treatment | PER D1.5 |
| Preheat and Interpass Temperature | PER D1.5 |
| Postheat Temperature | NONE |
| Heat Input | Min Max |

### WELDING PROCEDURE

Not Legible. Looks like Machine finished inside tube? I don't think that's correct. Detail name doesn't seem to match D1.5 but I cant read it too well.

| Pass no. | Electrode size | Welding Current Amperes | Welding Current Volts | Travel speed |
|---|---|---|---|---|
| 1 | 1/16 | 310 | 25 | 11 |
| Variable | LIMITS | 341 TO 269 | 27 TO 23 | 12 TO 10 |

Should this be 279?

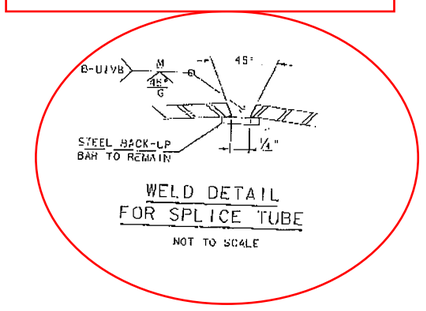


This procedure may vary due to fabrication sequence, fit-up, pass size, etc., within the limitation of variables given in Section 5.

Procedure No. 3900
Revision No.

Contractor Elderlee, Inc.
Authorized By RANDY SCOTT
Date 2/29/2016

Vermont Agency of Transportation
RECEIVED
CK'D BY RF, SC OK'D BY G. Laroche
March 10, 2016
RESUBMIT Yes Rejected
BY K. Higgins DATE 03/22/2016

## WELDING PROCEDURE SPECIFICATION

PQR ELDERLEE #3

| | |
|---|---|
| Material Specification | ASTM A500 TO A36 |
| Welding Process | FCAW-G |
| Manual or Machine | SEMAUTOMATIC |
| Position of Welding | FLAT/HORIZONTAL |
| Filler Metal Specification | A5.29 |
| Filler Metal Classification | E81T1-Ni1C-JH4 |
| Flux | N/A |
| Shielding Gas | CO 2 Dew Point -40DEG F Flow Rate 50CFH |
| Single or Multiple Pass | SINGLE |
| Single or Multiple Arc | SINGLE |
| Welding Current | DC |
| Polarity | REVERSE ELECTRODE POSITIVE |
| Welding Progression | STRINGER |
| Root Treatment | PER D1.5 |
| Preheat and Interpass Temperature | PER D1.5 |
| Postheat Temperature | NONE |
| Heat Input | Min Max |

### WELDING PROCEDURE

| Pass no. | Electrode size | Welding Current Amperes | Welding Current Volts | Travel speed | Joint detail |
|---|---|---|---|---|---|
| 1 | 1/16 | 310 | 25 | 11 | |
| Variable | LIMITS | 341 TO 269 | 27 TO 23 | 12 TO 10 | Not Legible. |

Should this be 279?

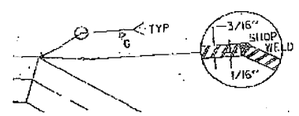


This procedure may vary due to fabrication sequence, fit-up, pass size, etc., within the limitation of variables given in Section 5.

Procedure No. 3901
Revision No.

Contractor Elderlee, Inc.
Authorized By RANDY SCOTT
Date 2/29/2016

Vermont Agency of Transportation
**RECEIVED**
Clarendon BRO 1442(68) Approach Rail Submittal 3-10-16 3-21-2016.pdf

CK'D BY RF, SC OK'D BY G. Laroche

March 10, 2016

RESUBMIT Yes **Rejected**

BY K. Higgins DATE 03/22/2016

# WELDING PROCEDURE SPECIFICATION

PQR ELDERLEE #3

| | |
|---|---|
| Material Specification | ASTM A500 TO A572 |
| Welding Process | FCAW-G |
| Manual or Machine | SEMAUTOMATIC |
| Position of Welding | FLAT/HORIZONTAL |
| Filler Metal Specification | A5.29 |
| Filler Metal Classification | E81T1-Ni1C-JH4 |
| Flux | N/A |
| Shielding Gas | CO 2 Dew Point -40DEG F Flow Rate 50CFH |
| Single or Multiple Pass | SINGLE |
| Single or Multiple Arc | SINGLE |
| Welding Current | DC |
| Polarity | REVERSE ELECTRODE POSITIVE |
| Welding Progression | STRINGER |
| Root Treatment | PER D1.5 |
| Preheat and Interpass Temperature | PER D1.5 |
| Postheat Temperature | NONE |
| Heat Input | Min Max |

## WELDING PROCEDURE

This is going to be a "U" groove weld??

| Pass no. | Electrode size | Welding Current Amperes | Welding Current Volts | Travel speed |
|---|---|---|---|---|
| 1 | 1/16 | 310 | 25 | 11 |
| Variable | LIMITS | 341 TO 269 | 27 TO 23 | 12 TO 10 |

Should this be 279?

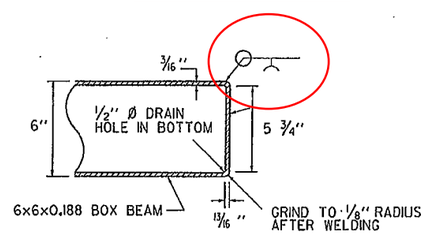


END COVER PLATE DETAIL

This procedure may vary due to fabrication sequence, fit-up, pass size, etc., within the limitation of variables given in Section 5.

Procedure No. 3902

Revision No.

Contractor Elderlee, Inc.

Authorized By RANDY SCOTT

Date 2/29/2016

Vermont Agency of Transportation
RECEIVED
Clarendon BRO 1442(46) Approach Rail Submittal 3-10-16 3-23-2016.pdf
CK'D BY RF, SC OK'D BY G. Laroche
March 10, 2016
RESUBMIT Yes Rejected
BY K. Higgins DATE 03/22/2016

## WELDING PROCEDURE SPECIFICATION

| | |
|---|---|
| Material Specification | A572 GR 50 |
| Welding Process | GMAW |
| Manual or Machine | SEMIAUTOMATIC/ROBOTIC |
| Position of Welding | FLAT/HORIZONTAL |
| Filler Metal Specification | A5.18 |
| Filler Metal Classification | L-56 LINCOLN |
| Flux | N/A |
| Shielding Gas | 90% ARGON /10% CO2 Dew Point -40DEG F Flow Rate 45CFH |
| Single or Multiple Pass | SINGLE |
| Single or Multiple Arc | SINGLE |
| Welding Current | DC |
| Polarity | REVERSE |
| Welding Progression | STRINGER |
| Root Treatment | PER D1.5 |
| Preheat and Interpass Temperature | PER D1.5 |
| Postheat Temperature | NONE |
| Heat Input | Min _____ Max _____ |

### WELDING PROCEDURE

| Pass no. | Electrode size | Welding Current Amperes | Welding Current Volts | Travel speed | Joint detail |
|---|---|---|---|---|---|
| | .045 | 190 | 22 | 19 | 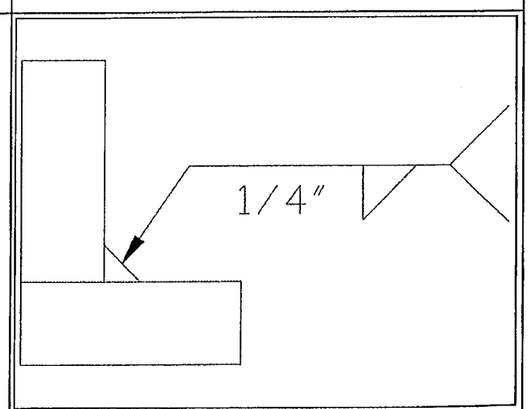 |
| Variable | LIMITS | 171 TO 209 | 20 TO 24 | 17 TO 21 | |



This procedure may vary due to fabrication sequence, fit-up, pass size, etc., within the limitation of variables given in Section 5.

Procedure No. 3022
Revision No. _____

Contractor Elderlee, Inc.
Authorized By RANDY SCOTT
Date 3/2/2016

Vermont Agency of Transportation
RECEIVED
CK'D BY RF, SC OK'D BY G. Laroche
March 10, 2016
RESUBMIT Yes Rejected
BY K. Higgins DATE 03/22/2016

## WELDING PROCEDURE SPECIFICATION

PQR ELDERLEE #3

| | |
|---|---|
| Material Specification | A500 TO A36 |
| Welding Process | FCAW-G |
| Manual or Machine | SEMAUTOMATIC |
| Position of Welding | FLAT/HORIZONTAL |
| Filler Metal Specification | A5.29 |
| Filler Metal Classification | E81T1-Ni1C-JH4 |
| Flux | N/A |
| Shielding Gas | CO 2 Dew Point -40DEG F Flow Rate 50CFH |
| Single or Multiple Pass | SINGLE |
| Single or Multiple Arc | SINGLE |
| Welding Current | DC |
| Polarity | REVERSE |
| Welding Progression | STRINGER |
| Root Treatment | CLEAN PER D1.5 |
| Preheat and Interpass Temperature | PER D1.5 |
| Postheat Temperature | NONE |
| Heat Input | Min Max |

### WELDING PROCEDURE

| Pass no. | Electrode size | Welding Current Amperes | Welding Current Volts | Travel speed | Joint detail |
|---|---|---|---|---|---|
| | 1/16 | 310 | 25 | 11 | |
| Variable | LIMITS | 341 TO 269 | 27 TO 23 | 12 TO 10 | 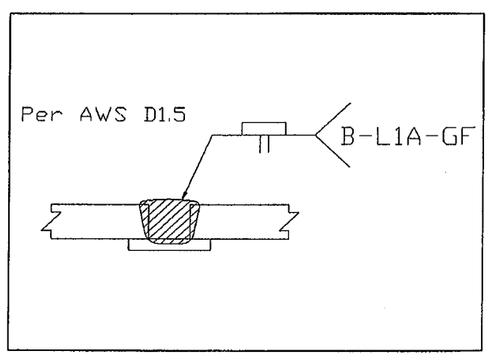 |



Should this be 279?

This procedure may vary due to fabrication sequence, fit-up, pass size, etc., within the limitation of variables given in Section 5.

Procedure No. 3026
Revision No.

Contractor Elderlee, Inc.
Authorized By RANDY SCOTT
Date 3/24/2014