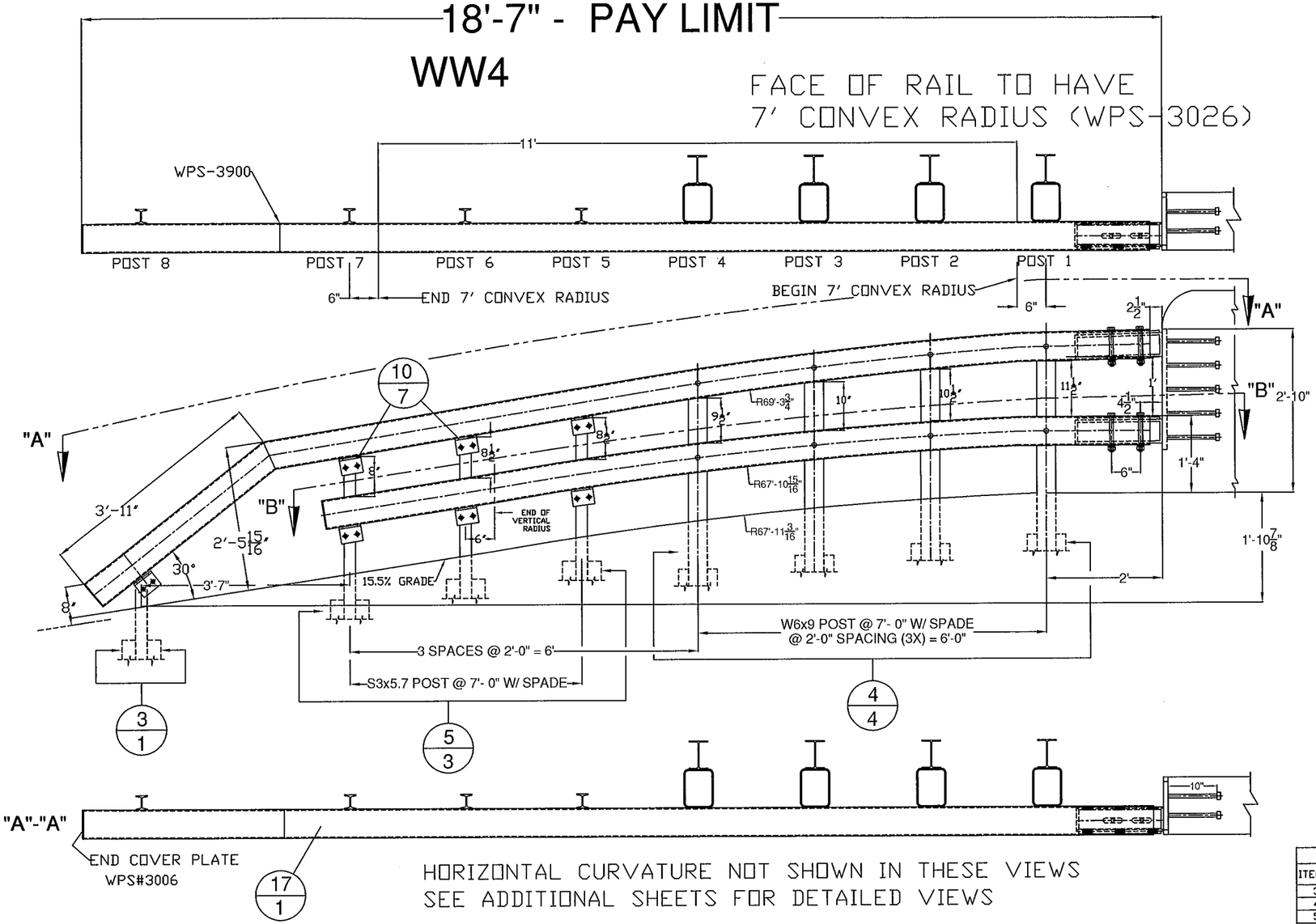

GUARD RAIL TO BRIDGE RAIL TRANSITION

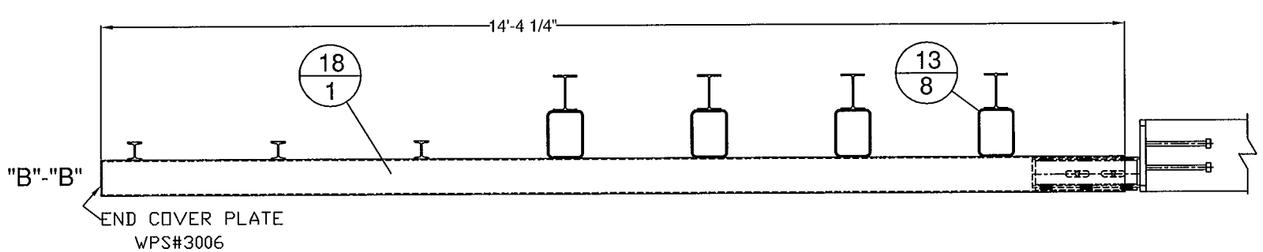

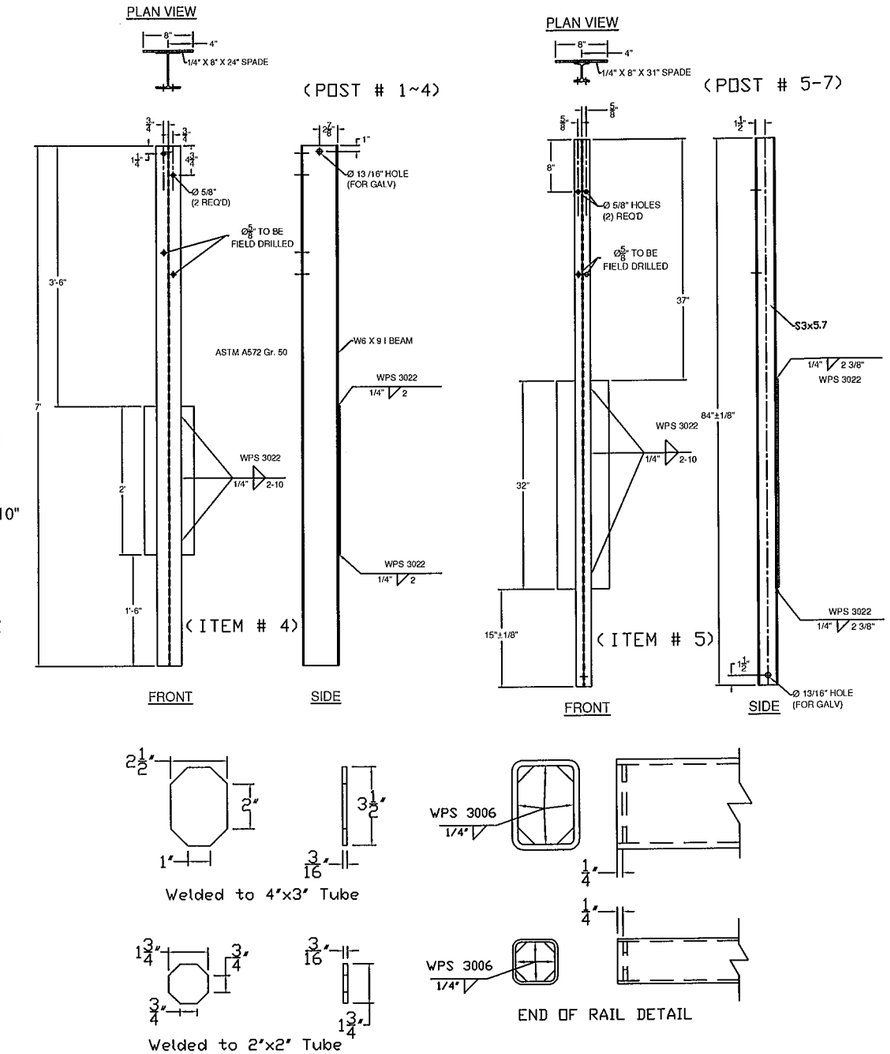

BILL OF MATERIALS, WW4

ITEM #	QTY.	COMPONENT #	DESCRIPTION	MATERIAL (ASTM)
3	1	0013.57060	3' I-END POST W/SPD @ 3'-8' LG	ASTM A572 Gr. 50
4	4	-	W6X9 POST @ 7' W/SPD & ø9/16" HOLE (SPECIAL)	ASTM A572 Gr. 50
5	3	-	3' I-POST, PUNCH 8", W/8X32" SPADE @ 7' (SPECIAL)	ASTM A572 Gr. 50
10	7	0054.00050	REG BB SHELF ANGLES @ 4-1/2"	ASTM A709 Gr. 50
13	8	0054.00563	6X8" TRANS. TUBE B/O @ 6" LG	A500 Gr. B
17	1	-	6X6" BB TOP TRANS @ 19'-4" LG W/ TURNDOWN & 7' CONVEX RADIUS	A500 Gr. B
18	1	-	6X6" BB BTM TRANS @ 14'-4 1/4" LG W/ 7' CONVEX RADIUS & VERT. RAD	A500 Gr. B
19	7	0080.03355	3/8" X 7 1/2" BOLT, NUT, & 2 FW	A307, A563, F436
20	7	0080.04100	1/2" x 1-1/2" BOLT, NUT, & FW	A307, A563, F436
21	16	0080.04120	1/2" x 1-1/2" BOLT, NUT, & 2 FW	A307, A563, F436
23	4	0080.06340	3/4" X 7-1/2" BOLT, NUT, 2 FW	A325, A563, F436
23	4		3/4" LOCK WASHER	ASME B18.21.1
24	8	0080.06370	3/4" X 8" CARR BOLT, NUT, FW & LW	A307, A563, F436

900.620 SPECIAL PROVISION (GUARDRAIL
ITEM #: APPROACH SECTION TO CONCRETE BRIDGE RAIL)

SHEET 1 OF 12

STRUCTURAL STEEL TO COMPLY W/ ASTM A6

TOLERANCE UNLESS OTHERWISE NOTED:
FRACTIONS = ± 1/16"
ANGLES = ± 1/2°
DIAMETERS = ± 1/32"

SPECIAL PROVISION, GRAS - CONCRETE COMBINATION BR.
ROUTE NO. T.H. 3 (CLASS 2), RURAL COLLECTOR, BRIDGE # 11
TOWN OF CLARENDON, RUTAND COUNTY, VT.

R	NO.	DATE	DESCRIPTION	BY	R	NO.	DATE	DESCRIPTION	BY
E	1	3/10/16	REVISED PER 2/23/16 MARK-UP	E.P.	E				
V	2	4/8/16	REVISED PER 3/22/16 MARK-UP	E.P.	V				

ELDERLEE, INC.
OAKS CORNERS, NEW YORK 14518
email: dlong@elderlee.com / epeek@elderlee.com
Tel: 315-789-6670 Fax: 315-789-6615

AISC CERTIFIED FABRICATOR
ORTHOGRAPHIC PROJECTION

DRAWN	E.P.	01/29/16
CHECKED	D.L.	.
APPROVED	M.V.	.
SCALE	SCHEMATIC	
DRAWING NO.	FRL - CLARENDON - T	

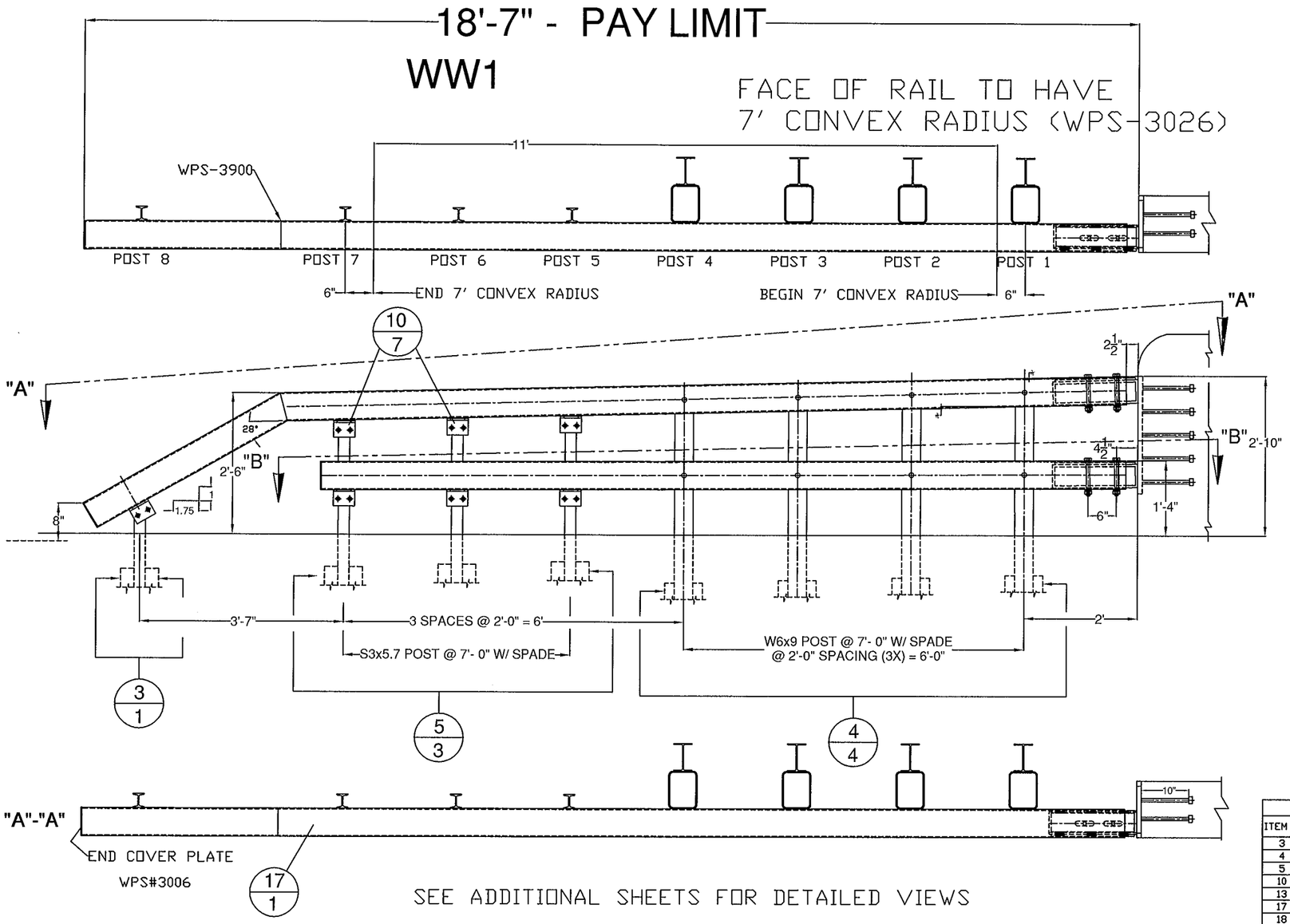

SEE ADDITIONAL SHEETS FOR DETAILED VIEWS

GUARD RAIL TO BRIDGE RAIL TRANSITION

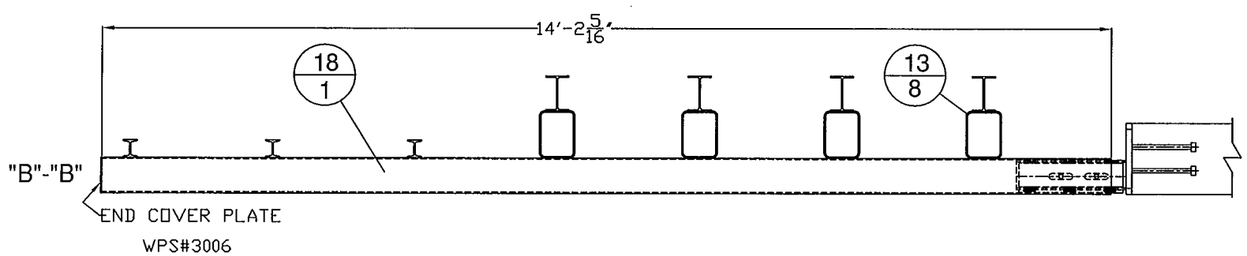

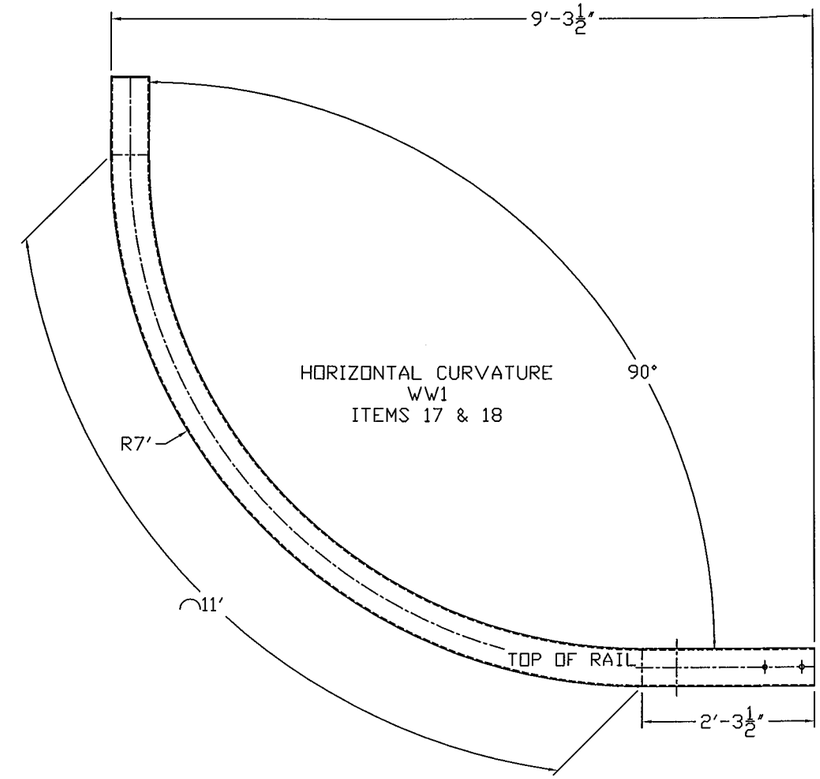

BILL OF MATERIALS, WW1				
ITEM #	QTY.	COMPONENT #	DESCRIPTION	MATERIAL (ASTM)
3	1	0013.57060	3' I-END POST W/SPD @ 3'-8' LG	ASTM A572 Gr. 50
4	4	-	W6X9 POST @ 7' W/SPD & ø9/16' HOLES @ VARIOUS	ASTM A572 Gr. 50
5	3	-	3' I-POST, PUNCH 8' & VARIOUS', W/8X32' SPADE @ 7'	ASTM A572 Gr. 50
10	7	0054.00050	REG BB SHELF ANGLES @ 4-1/2'	ASTM A709 Gr. 50
13	8	0054.00563	6X8' TRANS. TUBE B/O @ 6' LG	A500 Gr. B
17	1	-	6X6' BB TOP TRANS @ 14'-11 1/8' LG W/ TURNDOWN & 7' CONVEX RADIUS	A500 Gr. B
18	1	-	6X6' BB BTM TRANS @ 14'-2 5/16' LG W/ 7' CONVEX RADIUS	A500 Gr. B
19	7	0080.03355	3/8' X 7 1/2' BOLT, NUT, & 2 FW	A307, A563, F436
20	7	0080.04100	1/2' x 1-1/2' BOLT, NUT, & FW	A307, A563, F436
21	16	0080.04120	1/2' x 1-1/2' BOLT, NUT, & 2 FW	A307, A563, F436
23	4	0080.06340	3/4' X 7-1/2' BOLT, NUT, 2 FW	A325, A563, F436
23	4		3/4' LOCK WASHER	ASME B18.21.1
24	8	0080.06370	3/4' X 8' CARR BOLT, NUT, FW & LW	A307, A563, F436

900.620 SPECIAL PROVISION (GUARDRAIL
ITEM #: APPROACH SECTION TO CONCRETE BRIDGE RAIL)

SHEET 2 OF 12

STRUCTURAL STEEL TO COMPLY W/ ASTM A6

TOLERANCE UNLESS OTHERWISE NOTED:
FRACTIONS = ± 1/16"
ANGLES = ± 1/2°
DIAMETERS = ± 1/32"

SPECIAL PROVISION, GRAS - CONCRETE COMBINATION BR.

ROUTE NO. T.H. 3 (CLASS 2), RURAL COLLECTOR , BRIDGE # 11
TOWN OF CLARENDON, RUTAND COUNTY, VT.

REV	NO.	DATE	DESCRIPTION	BY	REV	NO.	DATE	DESCRIPTION	BY
	1	3/10/16	REVISED PER 2/23/16 MARK-UP	E.P.					
	2	4/8/16	REVISED PER 3/22/16 MARK-UP	E.P.					

ELDERLEE, INC.
OAKS CORNERS, NEW YORK 14518
email: dlong@elderlee.com / epeek@elderlee.com
Tel: 315-789-6670 Fax: 315-789-6615

AISC CERTIFIED FABRICATOR

ORTHOGRAPHIC PROJECTION

DRAWN	E.P.	01/29/16
CHECKED	D.L.	.
APPROVED	M.V.	.
SCALE	SCHEMATIC	
DRAWING NO.	FRL - CLARENDON - T	

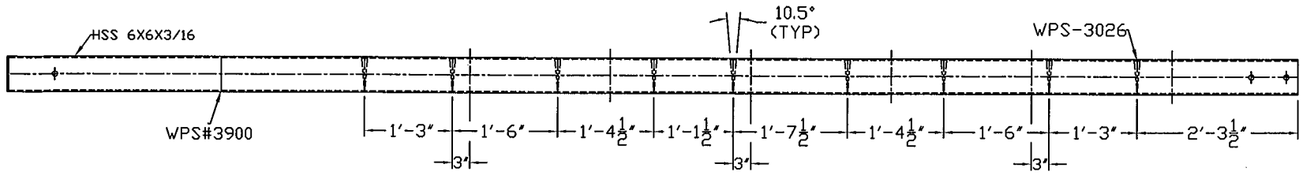

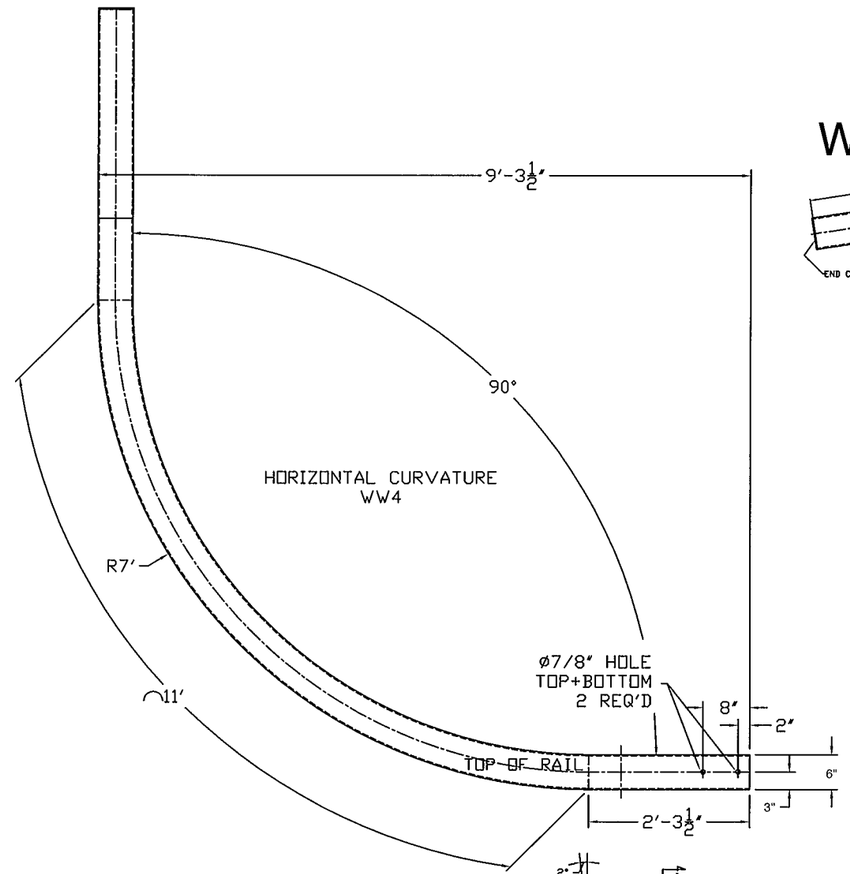

WW4

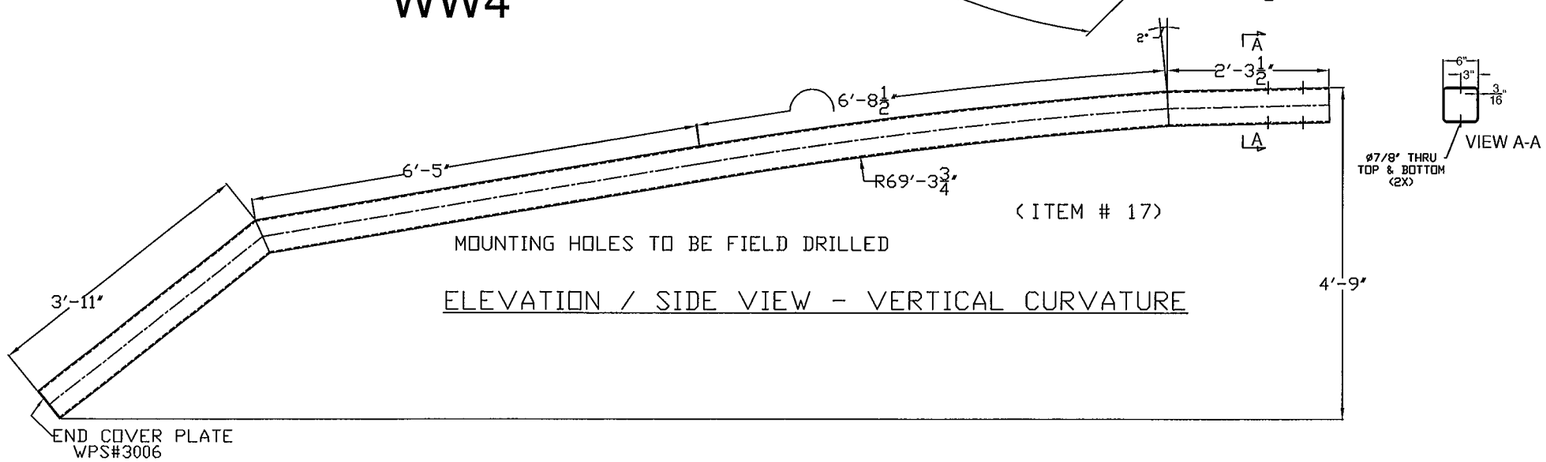

ELEVATION / SIDE VIEW - VERTICAL CURVATURE

WW4

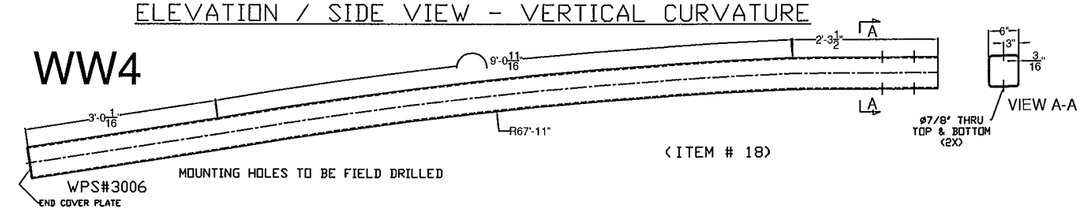

900.620 SPECIAL PROVISION (GUARDRAIL
ITEM #: APPROACH SECTION TO CONCRETE BRIDGE RAIL)

SHEET 3 OF 12

STRUCTURAL STEEL TO COMPLY W/ ASTM A6

TOLERANCE UNLESS OTHERWISE NOTED:
FRACTIONS = ± 1/16"
ANGLES = ± 1/2°
DIAMETERS = ± 1/32"

SPECIAL PROVISION, GRAS - CONCRETE COMBINATION BR.

ROUTE NO. T.H. 3 (CLASS 2), RURAL COLLECTOR, BRIDGE # 11
TOWN OF CLARENDON, RUTAND COUNTY, VT.

R	NO.	DATE	DESCRIPTION	BY	R	NO.	DATE	DESCRIPTION	BY
E	1	3/10/16	REVISED PER 2/23/16 MARK-UP	E.P.	E				
V	2	4/8/16	REVISED PER 3/22/16 MARK-UP	E.P.	V				

ELDERLEE, INC.
OAKS CORNERS, NEW YORK 14518
email: dlong@elderlee.com / epeck@elderlee.com
Tel: 315-789-6670 Fax: 315-789-6615

AISC CERTIFIED FABRICATOR

ORTHOGRAPHIC PROJECTION

DRAWN	E.P.	01/29/16
CHECKED	D.L.	.
APPROVED	M.V.	.
SCALE	SCHEMATIC	
DRAWING NO.	FRL - CLARENDON - T	

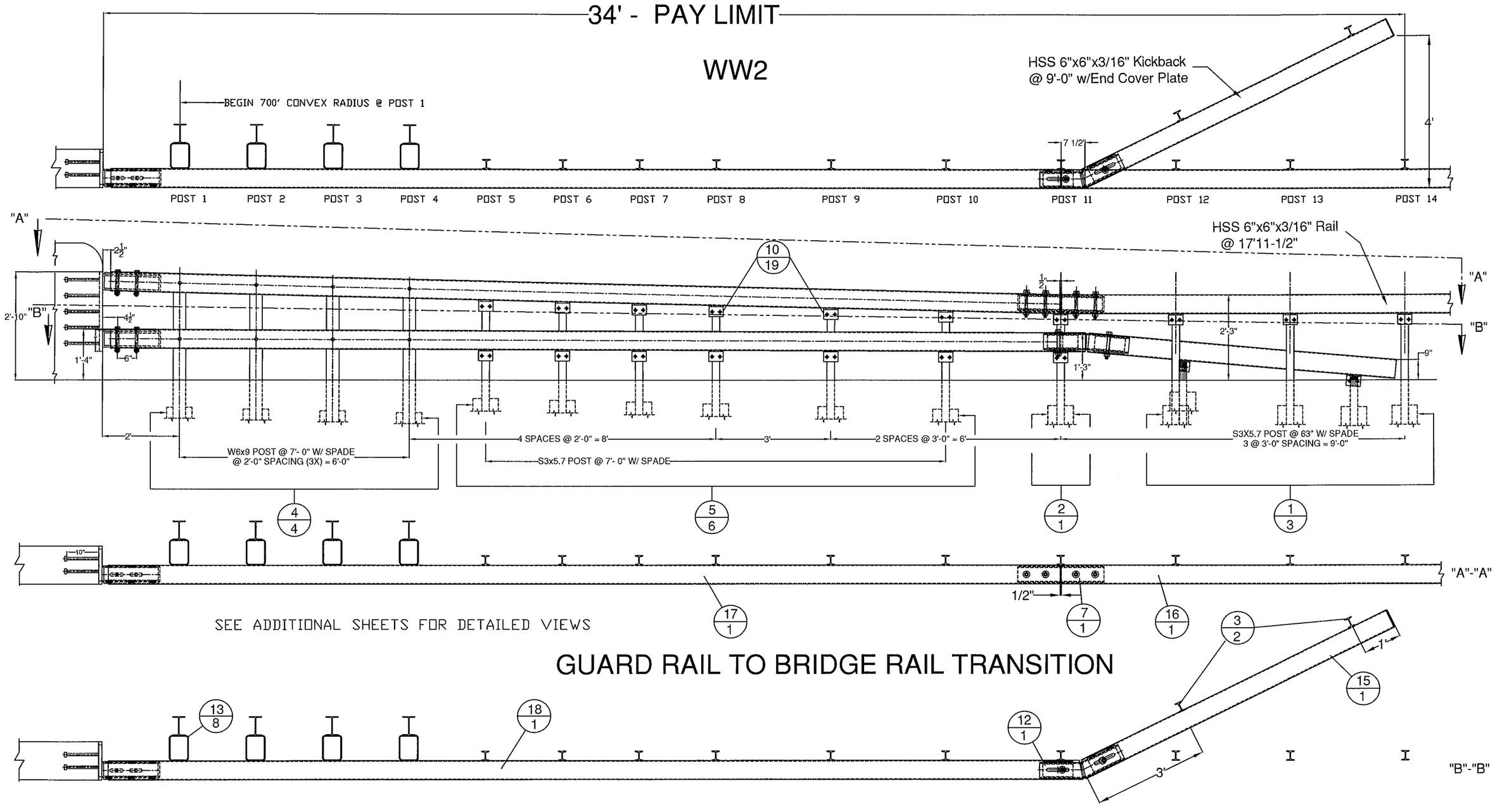

SEE ADDITIONAL SHEETS FOR DETAILED VIEWS

GUARD RAIL TO BRIDGE RAIL TRANSITION

900.620 SPECIAL PROVISION (GUARDRAIL
ITEM #: APPROACH SECTION TO CONCRETE BRIDGE RAIL)

SHEET 4 OF 12

STRUCTURAL STEEL TO COMPLY W/ ASTM A6

TOLERANCE UNLESS OTHERWISE NOTED:
FRACTIONS = ± 1/16"
ANGLES = ± 1/2°
DIAMETERS = ± 1/32"

SPECIAL PROVISION, GRAS - CONCRETE COMBINATION BR.

ROUTE NO. T.H. 3 (CLASS 2), RURAL COLLECTOR, BRIDGE # 11
TOWN OF CLARENDON, RUTAND COUNTY, VT.

R	NO.	DATE	DESCRIPTION	BY
E	1	3/10/16	REVISED PER 2/23/16 MARK-UP	E.P.
V	2	4/8/16	REVISED PER 3/22/16 MARK-UP	E.P.

R	NO.	DATE	DESCRIPTION	BY
E				
V				

ELDERLEE, INC.
OAKS CORNERS, NEW YORK 14518
email: dlong@elderlee.com / epeek@elderlee.com
Tel: 315-789-6670 Fax: 315-789-6615

AISC CERTIFIED FABRICATOR

ORTHOGRAPHIC PROJECTION

DRAWN	E.P.	01/29/16
CHECKED	D.L.	.
APPROVED	M.V.	.
SCALE	SCHEMATIC	
DRAWING NO.	FRL - CLARENDON - T	

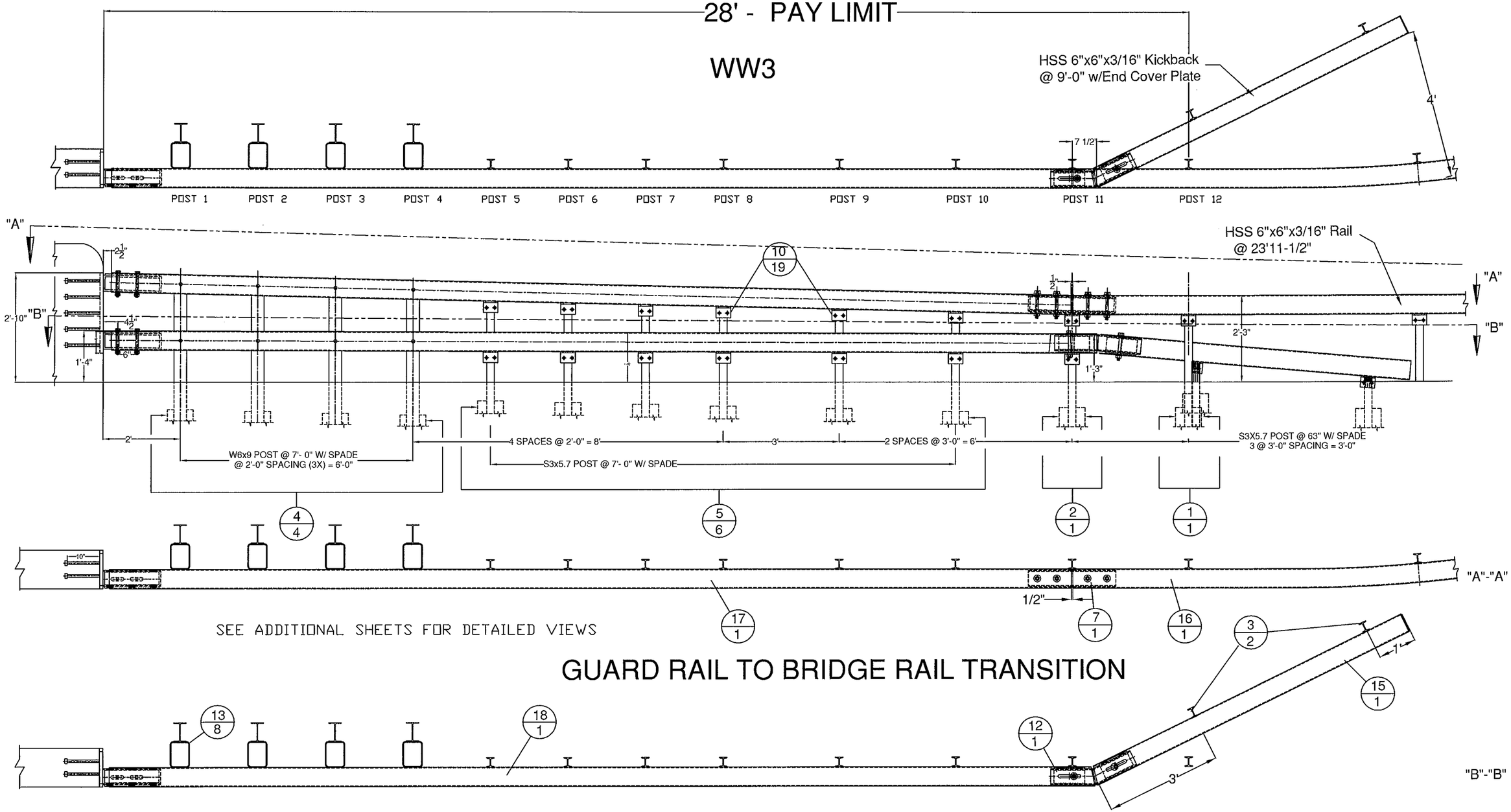

GUARD RAIL TO BRIDGE RAIL TRANSITION

GENERAL NOTES:

1) ALL RAILING IS TO BE FABRICATED AND ERECTED ACCORDING TO SECTION 525 OF THE STANDARD SPECIFICATIONS.
2) BOLTS SHALL BE TORQUED SNUG TIGHT (APPROXIMATELY 100 FT-LB).
3) PROTRUSIONS CAUSED BY WELDING OR GALVANIZING ARE NOT PERMITTED ON THE ADJOINING SURFACES OF THE BOX BEAM RAILS, SPLICE TUBES AND FILL PLATES.
4) ANY BENDING OF RAIL SHALL BE DONE AT THE FABRICATION PLANT. RADII GREATER THAN 16' TO BE CURVED ON A TUBE BENDING MACHINE, RADII LESS THAN 16' TO BE "PIE CUT" AND WELDED. CURVED RAILING WILL HAVE AN 18" LENGTH ON EACH END STRAIGHT TO ACCOMADATE SPLICES. "PIE CUTS ARE LOCATED SO AS TO NOT CONFLICT WITH POST FASTENING HOLES. PIE CUTS WILL BE WELDED ACCORDING TO PROCEDURE WPS-3026.

900.620 SPECIAL PROVISION (GUARDRAIL
ITEM #: APPROACH SECTION TO CONCRETE BRIDGE RAIL)

SHEET 5 OF 12

STRUCTURAL STEEL TO COMPLY W/ ASTM A6

TOLERANCE UNLESS OTHERWISE NOTED:
FRACTIONS = ± 1/16"
ANGLES = ± 1/2°
DIAMETERS = ± 1/32"

SPECIAL PROVISION, GRAS - CONCRETE COMBINATION BR.

ROUTE NO. T.H. 3 (CLASS 2), RURAL COLLECTOR, BRIDGE # 11
TOWN OF CLARENDON, RUTAND COUNTY, VT.

R	NO.	DATE	DESCRIPTION	BY
E	1	3/10/16	REVISED PER 2/23/16 MARK-UP	E.P.
V	2	4/8/16	REVISED PER 3/22/16 MARK-UP	E.P.

R	NO.	DATE	DESCRIPTION	BY
E				
V				

ELDERLEE, INC.
OAKS CORNERS, NEW YORK 14518
email: dlong@elderlee.com / epeek@elderlee.com
Tel: 315-789-6670 Fax: 315-789-6615

AISC CERTIFIED FABRICATOR

ORTHOGRAPHIC PROJECTION

DRAWN	E.P.	01/29/16
CHECKED	D.L.	.
APPROVED	M.V.	.
SCALE	SCHEMATIC	
DRAWING NO.	FRL - CLARENDON - T	

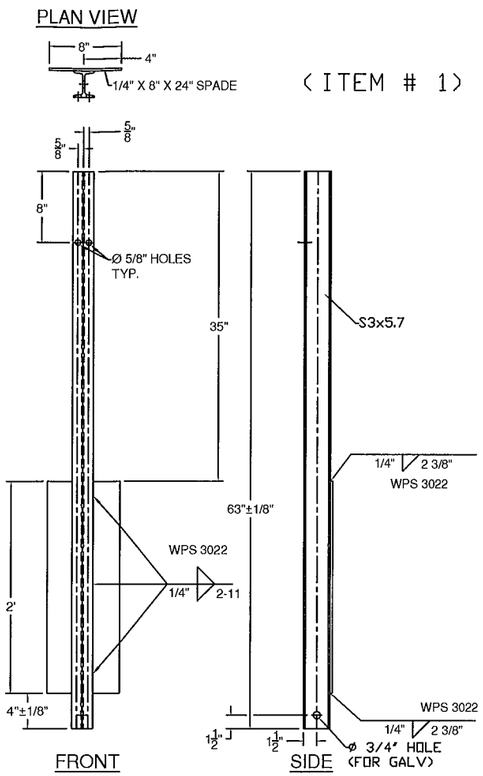

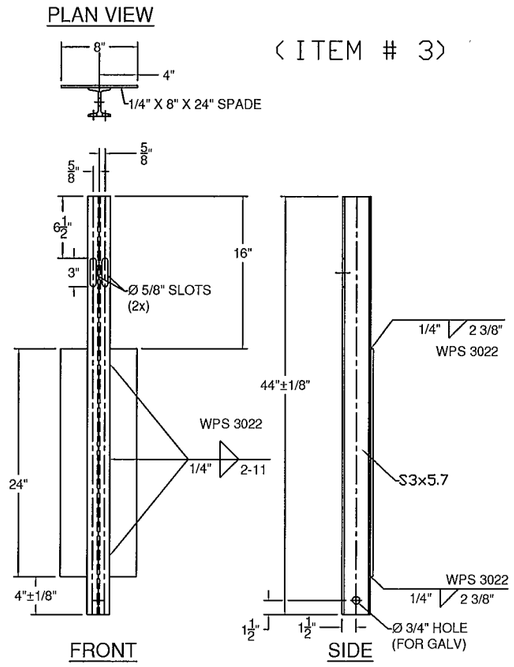

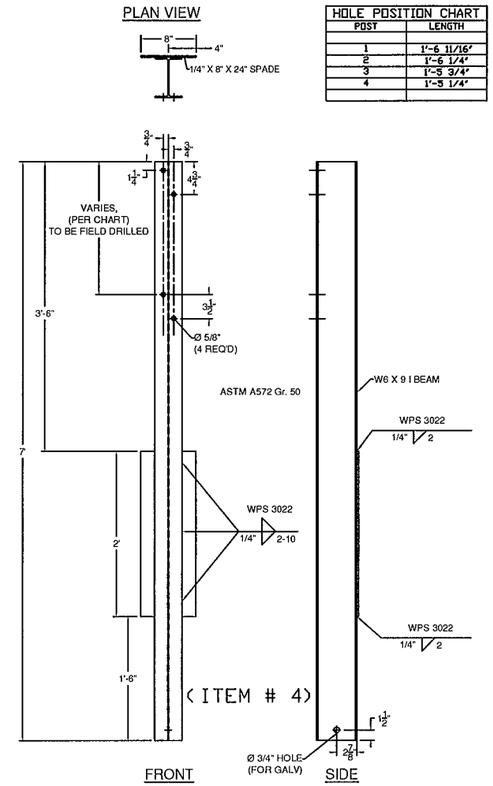

HOLE POSITION CHART	
POST	LENGTH
1	1'-6 11/16"
2	1'-6 1/4"
3	1'-5 3/4"
4	1'-5 1/4"

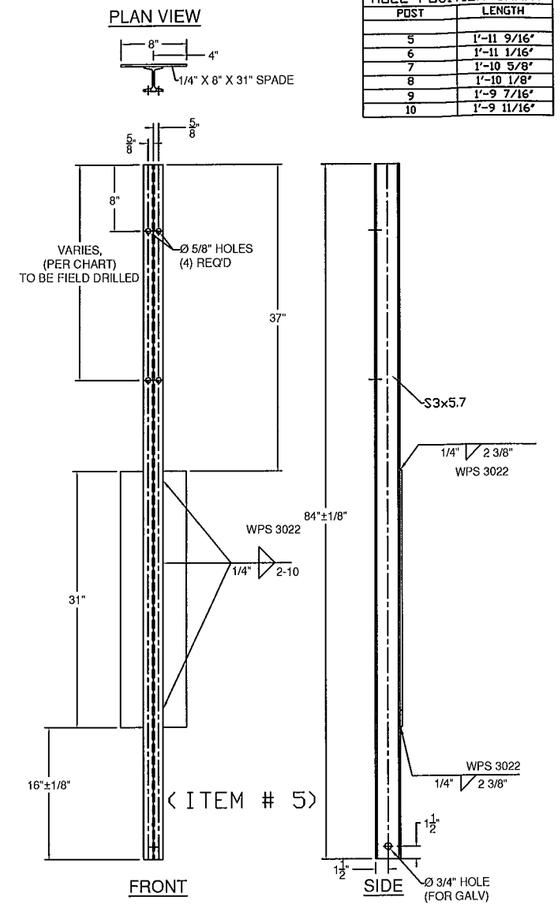

HOLE POSITION CHART	
POST	LENGTH
5	1'-11 9/16"
6	1'-11 1/16"
7	1'-10 5/8"
8	1'-10 1/8"
9	1'-9 7/16"
10	1'-9 11/16"

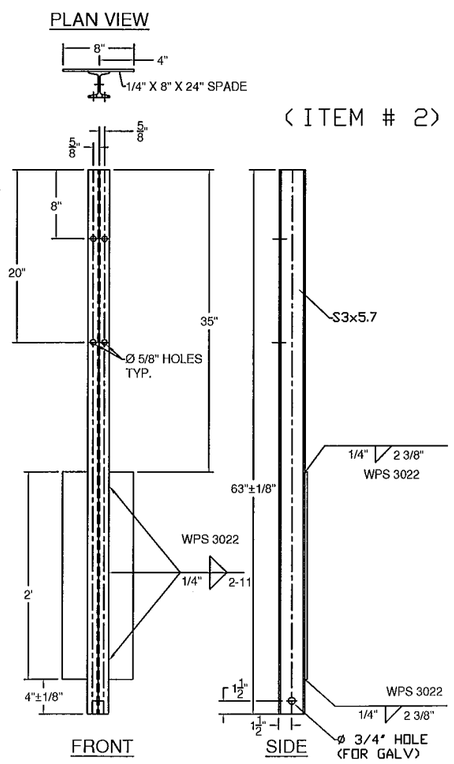

BILL OF MATERIALS, WW2				
ITEM #	QTY.	COMPONENT #	DESCRIPTION	MATERIAL (ASTM)
1	3	0013.57021	3" I-POST, PUNCH 8" W/SPD @ 63" LG	ASTM A572 Gr. 50
2	1	0013.57025	3" I-POST W/SPD @ 63", PUNCH 8", & 20"	ASTM A572 Gr. 50
3	2	0013.57060	3" I-END POST W/SPD @ 3'-8" LG	ASTM A572 Gr. 50
4	4	-	W6X9 POST @ 7' W/SPD & Ø9/16" HOLES @ VARIOUS	ASTM A572 Gr. 50
5	6	-	3" I-POST, PUNCH 8" & VARIOUS", W/8X32" SPADE @ 7'	ASTM A572 Gr. 50
7	1	0033.00640	HSS 5X5 BENT TUBE SPLICE @ 27" LG W/ 1/4" SHIMS	A500 Gr. B / A572 Gr 50
10	19	0054.00050	REG BB SHELF ANGLES @ 4-1/2"	ASTM A709 Gr. 50
12	1	0054.00074	HSS 5X5 DBL BEND TUBE SPL @ 26 3/4" LG - 25° ANGLE	A500 Gr. B / A572 Gr 50
13	8	0054.00563	6X8" TRANS. TUBE B/O @ 6" LG	A500 Gr. B
15	1	0054.09000	6X6" BB @ 9'-0" KICKBACK, W/ CAP & 13° ANGLE	A500 Gr. B / A36
16	1	-	6X6" BB @ 17'-11 1/2", DRILL 3" CC (W/ 700" CONVEX RAD.)	A500 Gr. B
17	1	-	6X6" BB TOP TRANS @ 24'-9 5/16" LG (W/ 700" CONVEX RAD.)	A500 Gr. B
18	1	-	6X6" BB BTM TRANS @ 25'-5" LG (W/700" CONVEX RAD.)	A500 Gr. B
19	19	0080.03355	3/8" X 7 1/2" BOLT, NUT, & 2 FW	A307, A563, F436
20	19	0080.04100	1/2" x 1-1/2" BOLT, NUT, & FW	A307, A563, F436
21	16	0080.04120	1/2" x 1-1/2" BOLT, NUT, & 2 FW	A307, A563, F436
23	10	0080.06340	3/4" X 7-1/2" BOLT, NUT, 2 FW	A325, A563, F436
23	8		3/4" LOCK WASHER	ASME B18.21.1
24	8	0080.06370	3/4" X 8" CARR BOLT, NUT, FW & LW	A307, A563, F436

BILL OF MATERIALS, WW3				
ITEM #	QTY.	COMPONENT #	DESCRIPTION	MATERIAL (ASTM)
1	1	0013.57021	3" I-POST, PUNCH 8" W/SPD @ 63" LG	ASTM A572 Gr. 50
2	1	0013.57025	3" I-POST W/SPD @ 63", PUNCH 8", & 20"	ASTM A572 Gr. 50
3	2	0013.57060	3" I-END POST W/SPD @ 3'-8" LG	ASTM A572 Gr. 50
4	4	-	W6X9 POST @ 7' W/SPD & Ø9/16" HOLES @ VARIOUS	ASTM A572 Gr. 50
5	6	-	3" I-POST, PUNCH 8" & VARIOUS", W/8X31" SPADE @ 7'	ASTM A572 Gr. 50
7	1	0033.00640	HSS 5X5 BENT TUBE SPLICE @ 27" LG W/ 1/4" SHIMS	A500 Gr. B / A572 Gr 50
10	19	0054.00050	REG BB SHELF ANGLES @ 4-1/2"	ASTM A709 Gr. 50
12	1	0054.00074	HSS 5X5 DBL BEND TUBE SPL @ 26 3/4" LG - 27° ANGLE	A500 Gr. B / A572 Gr 50
13	8	0054.00563	6X8" TRANS. TUBE B/O @ 6" LG	A500 Gr. B
15	1	0054.09000	6X6" BB @ 9'-0" KICKBACK, W/ CAP & 13° ANGLE	A500 Gr. B / A36
16	1	0054.18000	6X6" BB @ 23'-11 1/2", DRILL 3" CC	A500 Gr. B
17	1	-	6X6" BB TOP TRANS @ 24'-9 5/16" LG	A500 Gr. B
18	1	-	6X6" BB BTM TRANS @ 25'-5" LG	A500 Gr. B
19	17	0080.03355	3/8" X 7 1/2" BOLT, NUT, & 2 FW	A307, A563, F436
20	17	0080.04100	1/2" x 1-1/2" BOLT, NUT, & FW	A307, A563, F436
21	16	0080.04120	1/2" x 1-1/2" BOLT, NUT, & 2 FW	A307, A563, F436
23	10	0080.06340	3/4" X 7-1/2" BOLT, NUT, 2 FW	A325, A563, F436
23	8		3/4" LOCK WASHER	ASME B18.21.1
24	8	0080.06370	3/4" X 8" CARR BOLT, NUT, FW & LW	A307, A563, F436

HARDWARE NOTES	
ITEM #	FUNCTION
19	BOLT RAIL TO SHELF ANGLE (ITEM #10)
20	BOLT SHELF ANGLE (ITEM # 10) TO POST
21	BOLT BLOCK-OUTS (ITEM # 13) TO HEAVY POST (ITEM # 4)
23	SPLICE TUBING (ITEM #'S 7 & 12), & (4) PER PARAPET WALL CONNECTION
24	BOLT RAIL (ITEMS #'S 17, & 18 TO BLOCK-OUTS (ITEM # 13)

900.620 SPECIAL PROVISION (GUARDRAIL
ITEM #: APPROACH SECTION TO CONCRETE BRIDGE RAIL)

SHEET 6 OF 12

STRUCTURAL STEEL TO COMPLY W/ ASTM A6

TOLERANCE UNLESS OTHERWISE NOTED:
FRACTIONS = ± 1/16"
ANGLES = ± 1/2°
DIAMETERS = ± 1/32"

SPECIAL PROVISION, GRAS - CONCRETE COMBINATION BR.

ROUTE NO. T.H. 3 (CLASS 2), RURAL COLLECTOR, BRIDGE # 11
TOWN OF CLARENDON, RUTAND COUNTY, VT.

R	NO.	DATE	DESCRIPTION	BY	R	NO.	DATE	DESCRIPTION	BY
E	1	3/10/16	REVISED PER 2/23/16 MARK-UP	E.P.	E				
V	2	4/8/16	REVISED PER 3/22/16 MARK-UP	E.P.	V				

ELDERLEE, INC.
OAKS CORNERS, NEW YORK 14518
email:dlong@elderlee.com / epeek@elderlee.com
Tel:315-789-6670 Fax:315-789-6615

CERTIFIED FABRICATOR
ORTHOGRAPHIC PROJECTION

DRAWN	E.P.	01/29/16
CHECKED	D.L.	
APPROVED	M.V.	
SCALE	SCHEMATIC	
DRAWING NO.	FRL - CLARENDON - T	

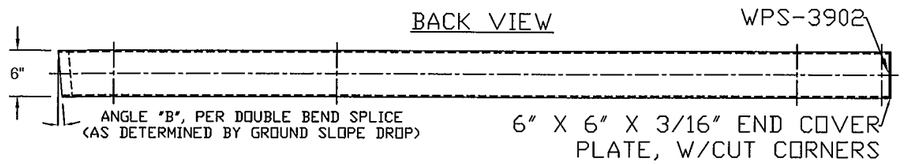

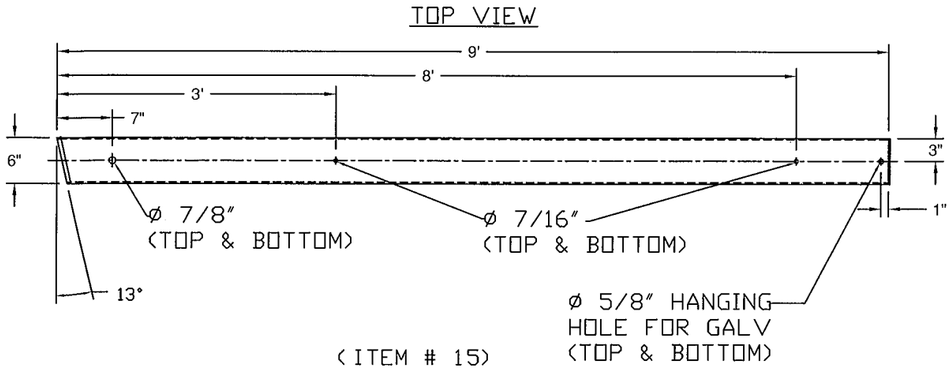

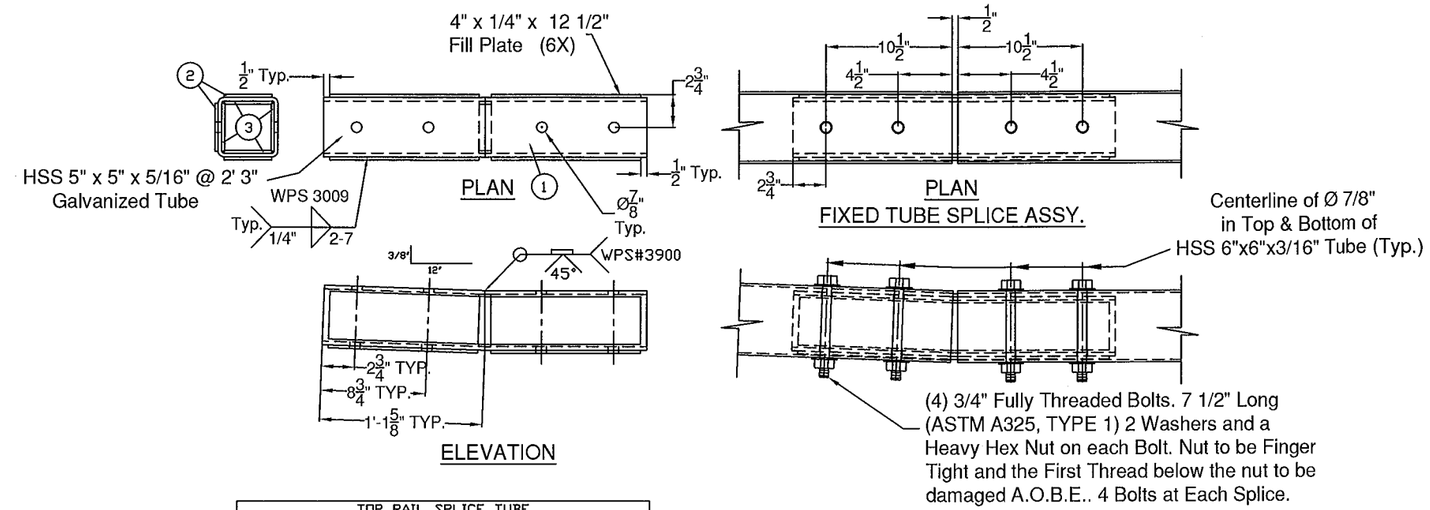

TOP RAIL SPLICE TUBE		
ITEM#	QTY.	DESCRIPTION
1	2	5" X 5" X 5/16" TUBE @ 27" ASTM A500 Gr. B
2	6	1/4" X 4" X 12 1/2" ASTM A36(A709 Gr36)CVN
3	4	3/16" X 1" X 4" BACKER PLATE

(ITEM # 7)

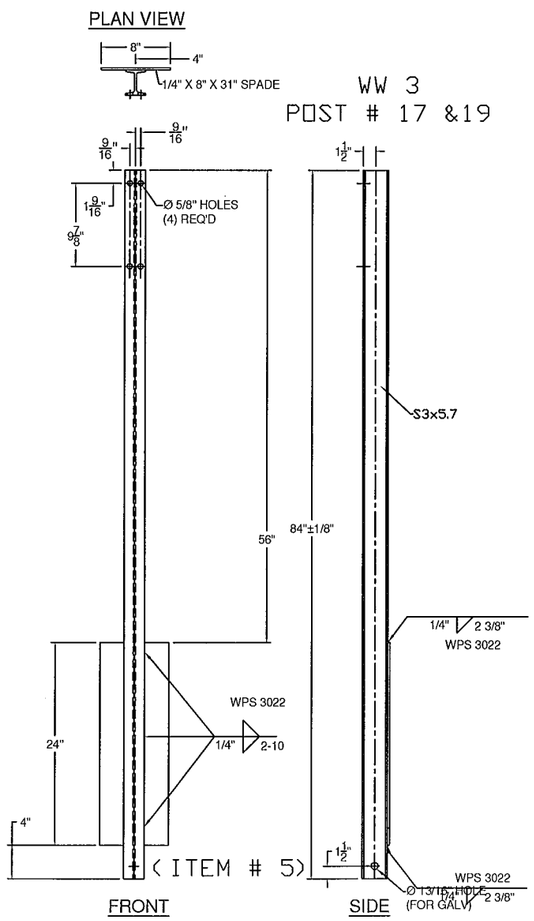

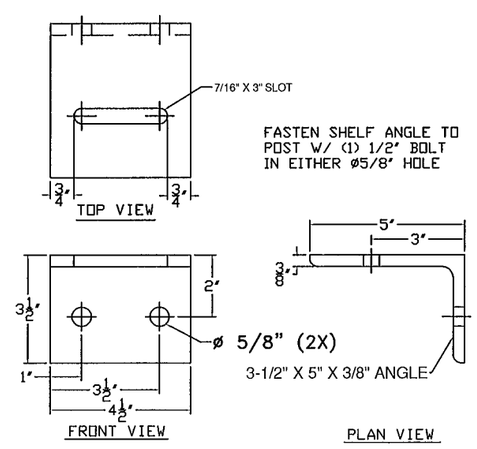

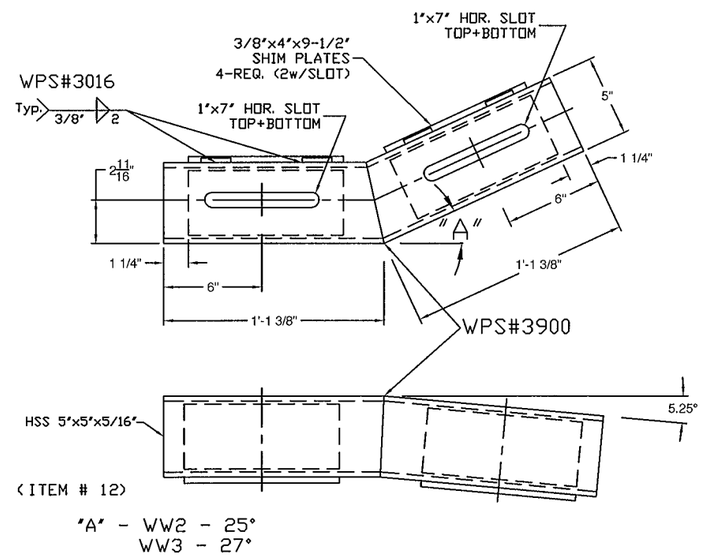

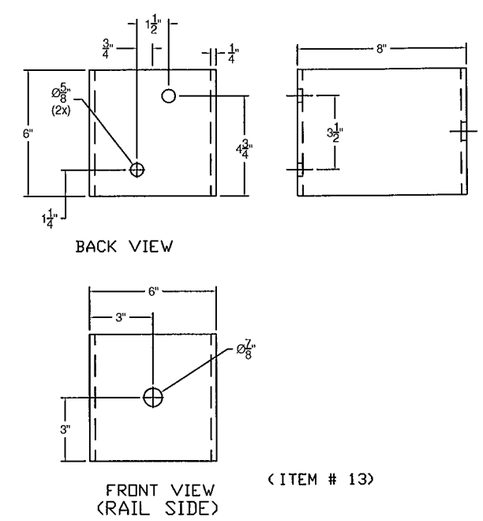

900.620 SPECIAL PROVISION (GUARDRAIL
ITEM #: APPROACH SECTION TO CONCRETE BRIDGE RAIL)

SHEET 7 OF 12

STRUCTURAL STEEL TO COMPLY W/ ASTM A6

TOLERANCE UNLESS OTHERWISE NOTED:
FRACTIONS = ± 1/16"
ANGLES = ± 1/2°
DIAMETERS = ± 1/32"

SPECIAL PROVISION, GRAS - CONCRETE COMBINATION BR.

ROUTE NO. T.H. 3 (CLASS 2), RURAL COLLECTOR, BRIDGE # 11
TOWN OF CLARENDON, RUTAND COUNTY, VT.

R	NO.	DATE	DESCRIPTION	BY	R	NO.	DATE	DESCRIPTION	BY
E	1	3/10/16	REVISED PER 2/23/16 MARK-UP	E.P.	E				
V	2	4/8/16	REVISED PER 3/22/16 MARK-UP	E.P.	V				

ELDERLEE, INC.
OAKS CORNERS, NEW YORK 14518
email: dlong@elderlee.com / epeek@elderlee.com
Tel: 315-789-6670 Fax: 315-789-6615

AISC CERTIFIED FABRICATOR

ORTHOGRAPHIC PROJECTION

DRAWN	E.P.	01/29/16
CHECKED	D.L.	
APPROVED	M.V.	
SCALE	SCHEMATIC	
DRAWING NO.	FRL - CLARENDON - T	

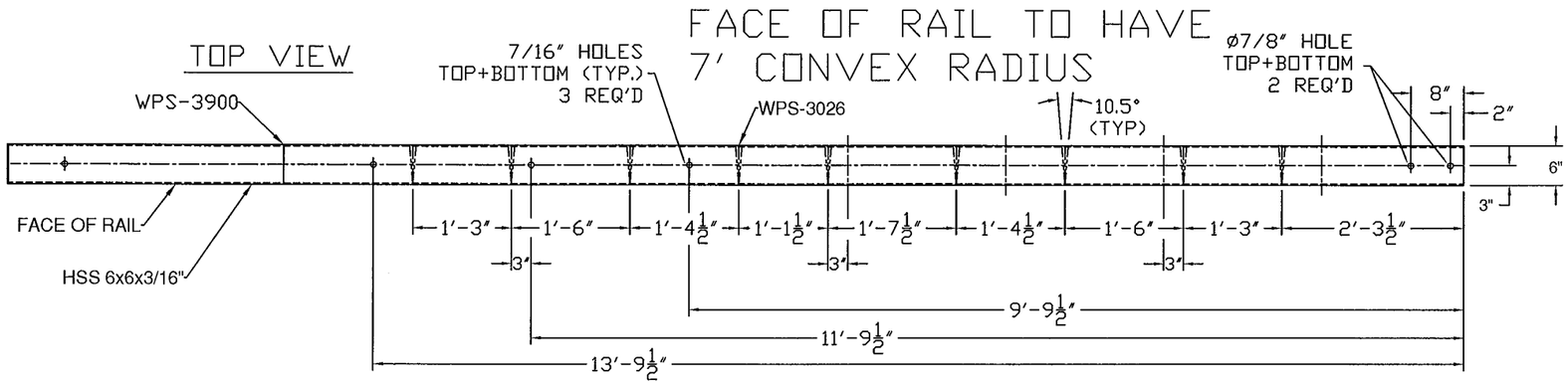

WW1

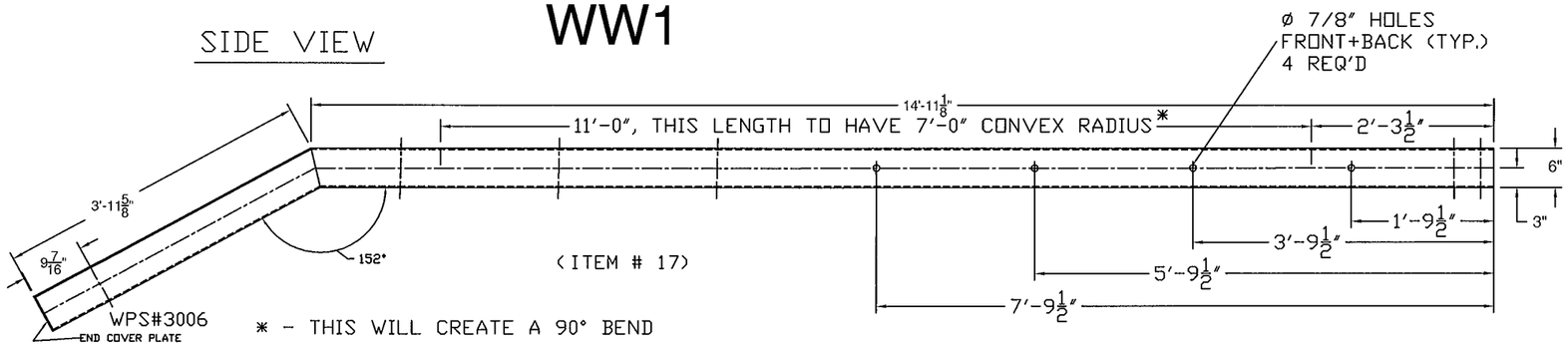

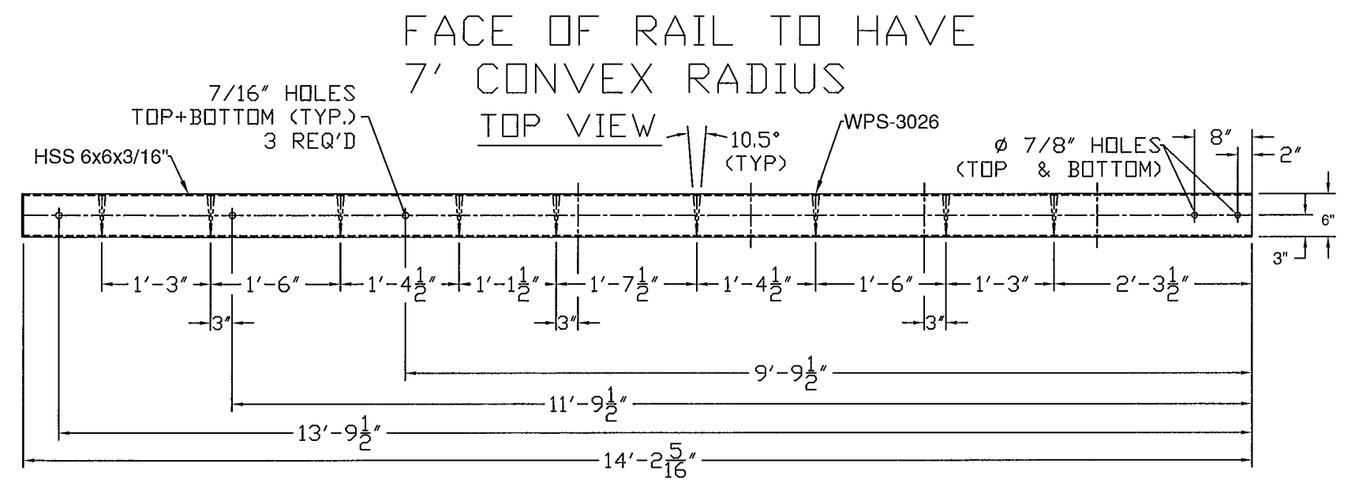

WW1

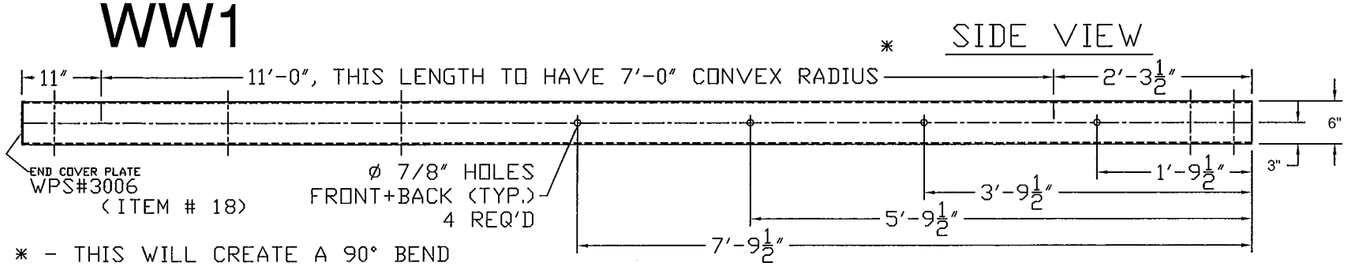

900.620 SPECIAL PROVISION (GUARDRAIL
ITEM #: APPROACH SECTION TO CONCRETE BRIDGE RAIL)

SHEET 8 OF 12

STRUCTURAL STEEL TO COMPLY W/ ASTM A6

TOLERANCE UNLESS OTHERWISE NOTED:
FRACTIONS = ± 1/16"
ANGLES = ± 1/2°
DIAMETERS = ± 1/32"

SPECIAL PROVISION, GRAS - CONCRETE COMBINATION BR.

ROUTE NO. T.H. 3 (CLASS 2), RURAL COLLECTOR, BRIDGE # 11
TOWN OF CLARENDON, RUTAND COUNTY, VT.

R	NO.	DATE	DESCRIPTION	BY
E	1	3/10/16	REVISED PER 2/23/16 MARK-UP	E.P.
V	2	4/8/16	REVISED PER 3/22/16 MARK-UP	E.P.

R	NO.	DATE	DESCRIPTION	BY
E				
V				

ELDERLEE, INC.
OAKS CORNERS, NEW YORK 14518
email: dlong@elderlee.com / epsek@elderlee.com
Tel: 315-789-6670 Fax: 315-789-6615

AISC CERTIFIED FABRICATOR
ORTHOGRAPHIC PROJECTION

DRAWN	E.P.	01/29/16
CHECKED	D.L.	
APPROVED	M.V.	
SCALE	SCHEMATIC	
DRAWING NO.	FRL - CLARENDON - T	

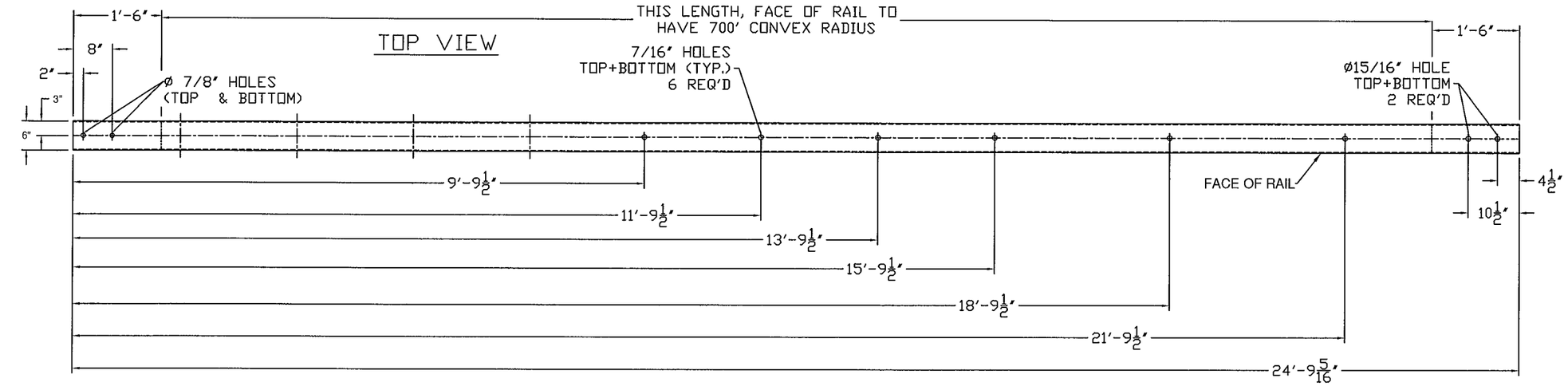

WW2

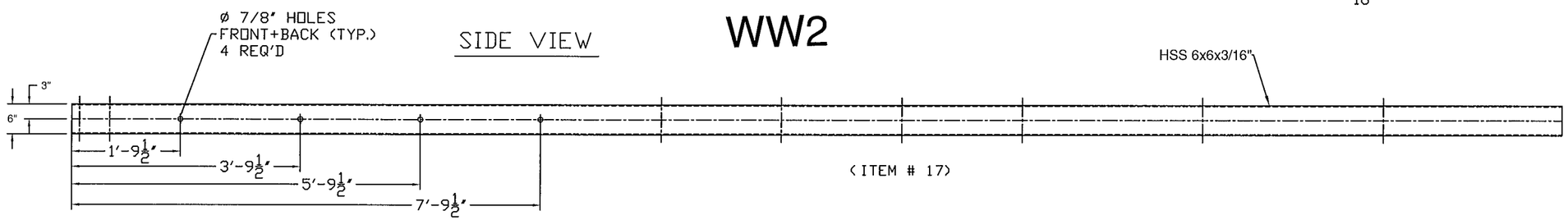

(ITEM # 17)

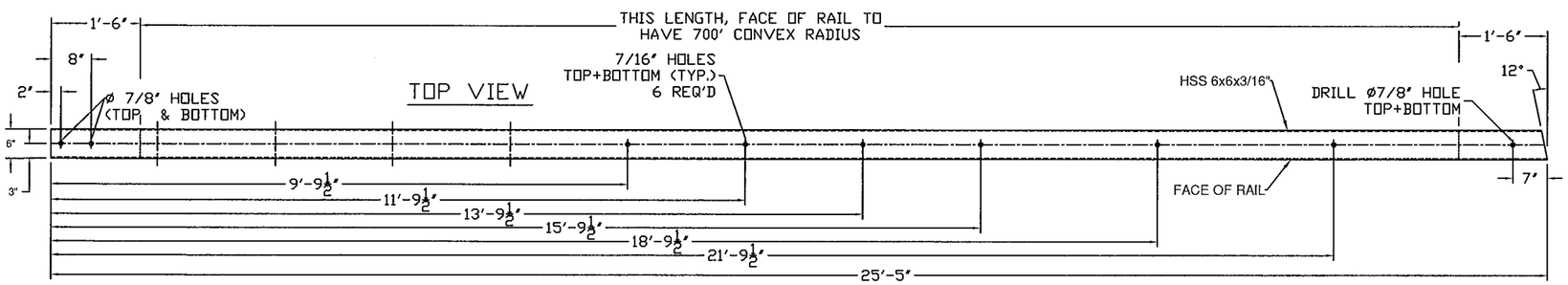

WW 2

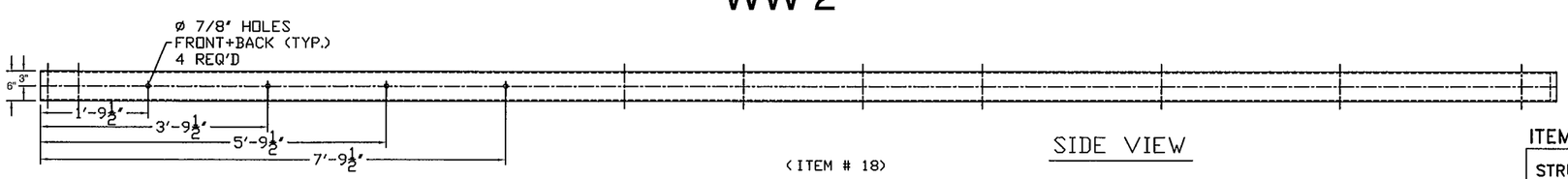

(ITEM # 18)

SIDE VIEW

ITEM #: 900.620 SPECIAL PROVISION (GUARDRAIL APPROACH SECTION TO CONCRETE BRIDGE RAIL)

SHEET 9 OF 12

STRUCTURAL STEEL TO COMPLY W/ ASTM A6

TOLERANCE UNLESS OTHERWISE NOTED:
FRACTIONS = ± 1/16"
ANGLES = ± 1/2°
DIAMETERS = ± 1/32"

SPECIAL PROVISION, GRAS - CONCRETE COMBINATION BR.

ROUTE NO. T.H. 3 (CLASS 2), RURAL COLLECTOR, BRIDGE # 11
TOWN OF CLARENDON, RUTAND COUNTY, VT.

REV	NO.	DATE	DESCRIPTION	BY
	1	3/10/16	REVISED PER 2/23/16 MARK-UP	E.P.
	2	4/8/16	REVISED PER 3/22/16 MARK-UP	E.P.

REV	NO.	DATE	DESCRIPTION	BY

ELDERLEE, INC.
OAKS CORNERS, NEW YORK 14518
email: dlong@elderlee.com / epeek@elderlee.com
Tel: 315-789-6670 Fax: 315-789-6615

AISC CERTIFIED FABRICATOR

ORTHOGRAPHIC PROJECTION

DRAWN	E.P.	01/29/16
CHECKED	D.L.	
APPROVED	M.V.	
SCALE	SCHEMATIC	
DRAWING NO.	FRL - CLARENDON - T	

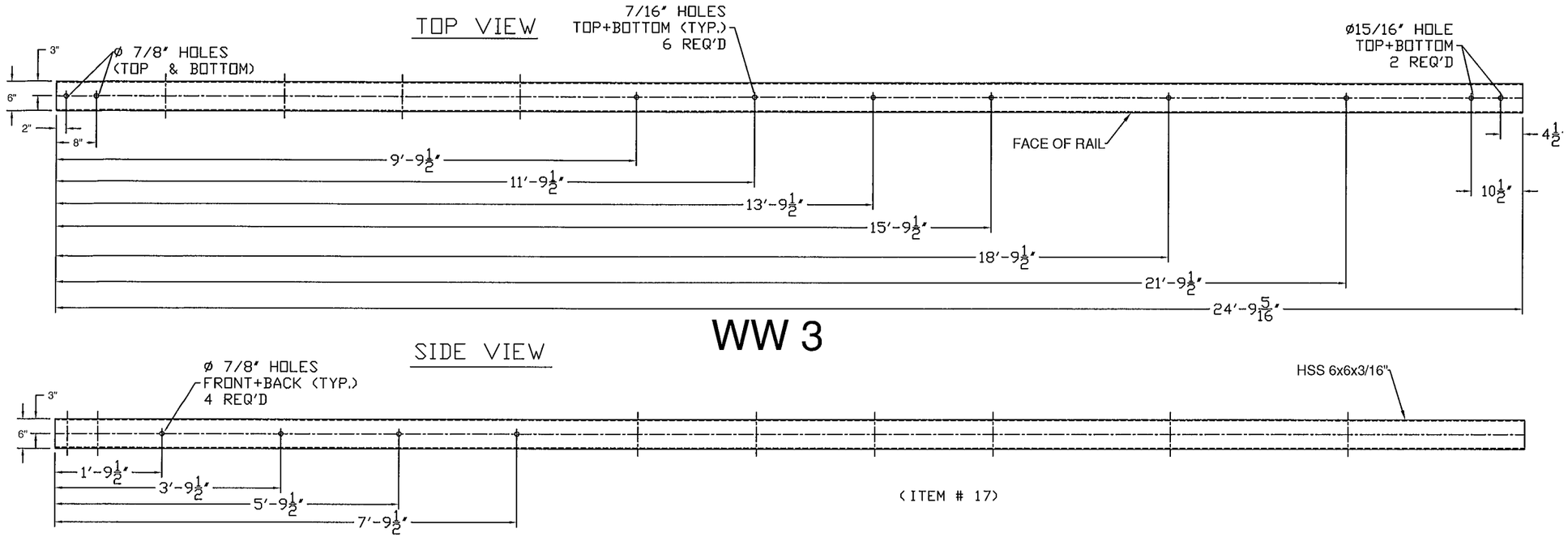

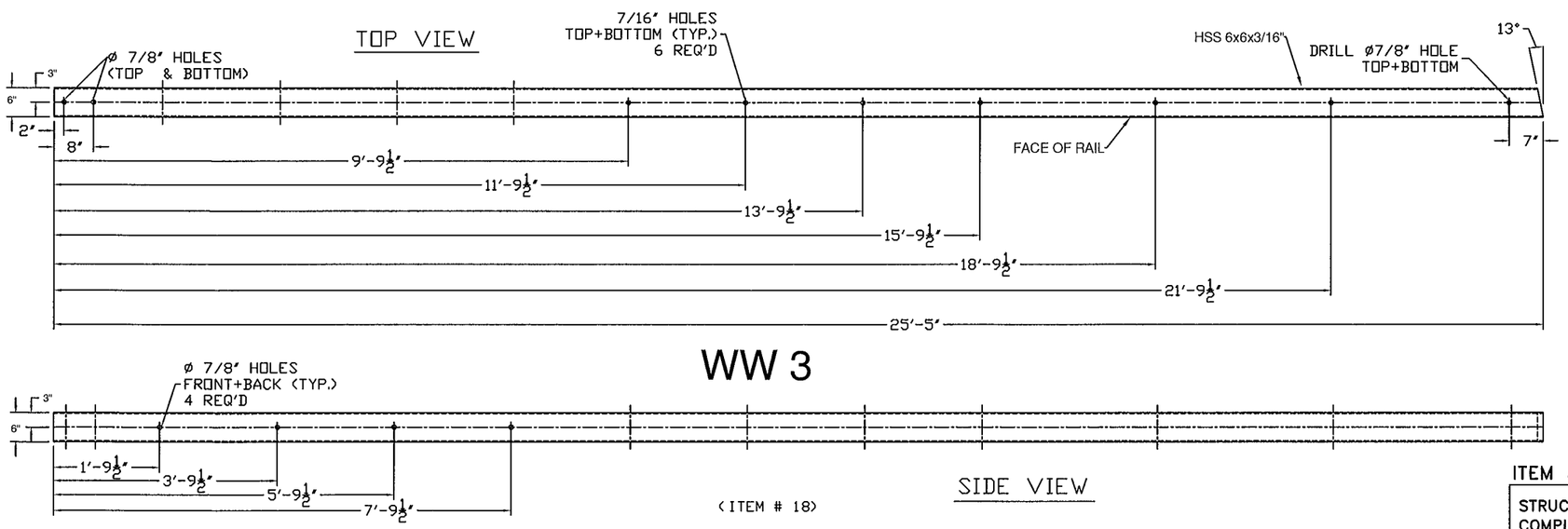

ITEM #: 900.620 SPECIAL PROVISION (GUARDRAIL APPROACH SECTION TO CONCRETE BRIDGE RAIL)

SHEET 10 OF 12

STRUCTURAL STEEL TO COMPLY W/ ASTM A6

TOLERANCE UNLESS OTHERWISE NOTED:
FRACTIONS = ± 1/16"
ANGLES = ± 1/2°
DIAMETERS = ± 1/32"

SPECIAL PROVISION, GRAS - CONCRETE COMBINATION BR.

ROUTE NO. T.H. 3 (CLASS 2), RURAL COLLECTOR, BRIDGE # 11
TOWN OF CLARENDON, RUTAND COUNTY, VT.

R	NO.	DATE	DESCRIPTION	BY
E	1	3/10/16	REVISED PER 2/23/16 MARK-UP	E.P.
V	2	4/8/16	REVISED PER 3/22/16 MARK-UP	E.P.

R	NO.	DATE	DESCRIPTION	BY
E				
V				

ELDERLEE, INC.
OAKS CORNERS, NEW YORK 14518
email: dlong@elderlee.com / epeek@elderlee.com
Tel: 315-789-6670 Fax: 315-789-6615

AISC CERTIFIED FABRICATOR

ORTHOGRAPHIC PROJECTION

DRAWN	E.P.	01/29/16
CHECKED	D.L.	
APPROVED	M.V.	
SCALE	SCHEMATIC	
DRAWING NO.	FRL - CLARENDON - T	

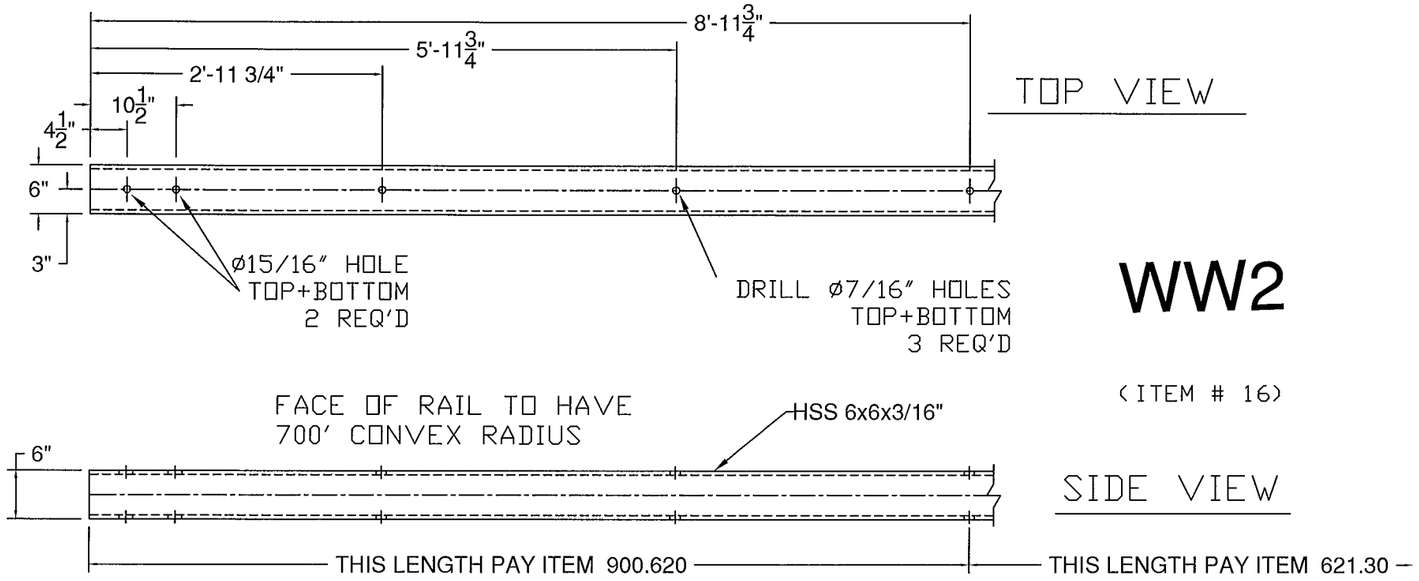

WW2

(ITEM # 16)

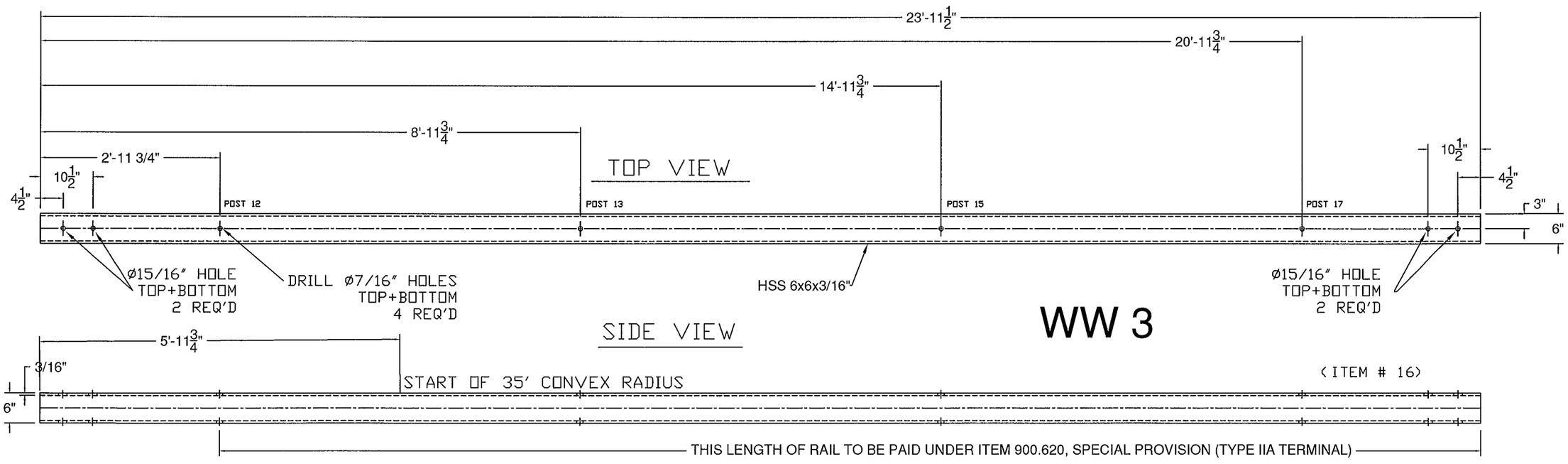

WW 3

(ITEM # 16)

900.620 SPECIAL PROVISION (GUARDRAIL
ITEM #: APPROACH SECTION TO CONCRETE BRIDGE RAIL)

SHEET 11 OF 12

STRUCTURAL STEEL TO COMPLY W/ ASTM A6

TOLERANCE UNLESS OTHERWISE NOTED:
FRACTIONS = ± 1/16"
ANGLES = ± 1/2°
DIAMETERS = ± 1/32"

SPECIAL PROVISION, GRAS - CONCRETE COMBINATION BR.

ROUTE NO. T.H. 3 (CLASS 2), RURAL COLLECTOR, BRIDGE # 11
TOWN OF CLARENDON, RUTAND COUNTY, VT.

R	NO.	DATE	DESCRIPTION	BY	R	NO.	DATE	DESCRIPTION	BY
E	1	3/10/16	REVISED PER 2/23/16 MARK-UP	E.P.	E				
V	2	4/8/16	REVISED PER 3/22/16 MARK-UP	E.P.	V				

ELDERLEE, INC.
OAKS CORNERS, NEW YORK 14518
email: dlong@elderlee.com / epeek@elderlee.com
Tel: 315-789-6670 Fax: 315-789-6615

AISC CERTIFIED FABRICATOR

ORTHOGRAPHIC PROJECTION

DRAWN	E.P.	01/29/16
CHECKED	D.L.	
APPROVED	M.V.	
SCALE	SCHEMATIC	
DRAWING NO.	FRL - CLARENDON - T	

WW 3

(ITEM # 16)

PLAN VIEW

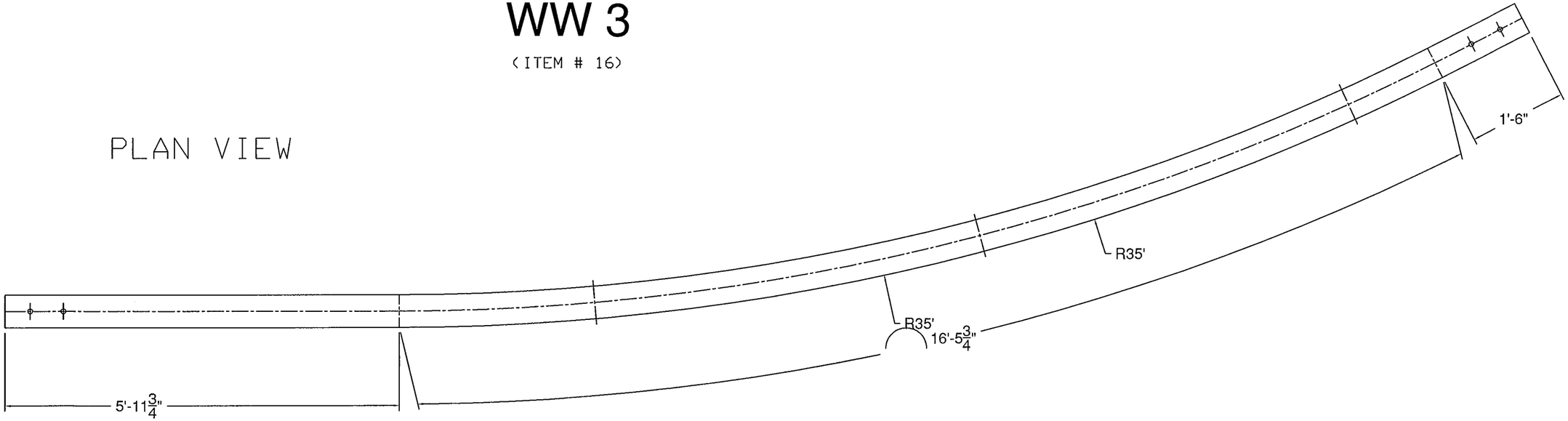

900.620 SPECIAL PROVISION (GUARDRAIL
ITEM #: APPROACH SECTION TO CONCRETE BRIDGE RAIL)

SHEET 12 OF 12

STRUCTURAL STEEL TO COMPLY W/ ASTM A6

TOLERANCE UNLESS OTHERWISE NOTED:
FRACTIONS = ± 1/16"
ANGLES = ± 1/2°
DIAMETERS = ± 1/32"

SPECIAL PROVISION, GRAS - CONCRETE COMBINATION BR.

ROUTE NO. T.H. 3 (CLASS 2), RURAL COLLECTOR , BRIDGE # 11
TOWN OF CLARENDON, RUTAND COUNTY, VT.

REV	NO.	DATE	DESCRIPTION	BY	REV	NO.	DATE	DESCRIPTION	BY
	1	3/10/16	REVISED PER 2/23/16 MARK-UP	E.P.					
	2	4/8/16	REVISED PER 3/22/16 MARK-UP	E.P.					

ELDERLEE, INC.
OAKS CORNERS, NEW YORK 14518
email: dlong@elderlee.com / epeek@elderlee.com
Tel: 315-789-6670 Fax: 315-789-6615

AISC CERTIFIED FABRICATOR

ORTHOGRAPHIC PROJECTION

DRAWN	E.P.	01/29/16
CHECKED	D.L.	
APPROVED	M.V.	
SCALE	SCHEMATIC	
DRAWING NO.	FRL - CLARENDON - T	