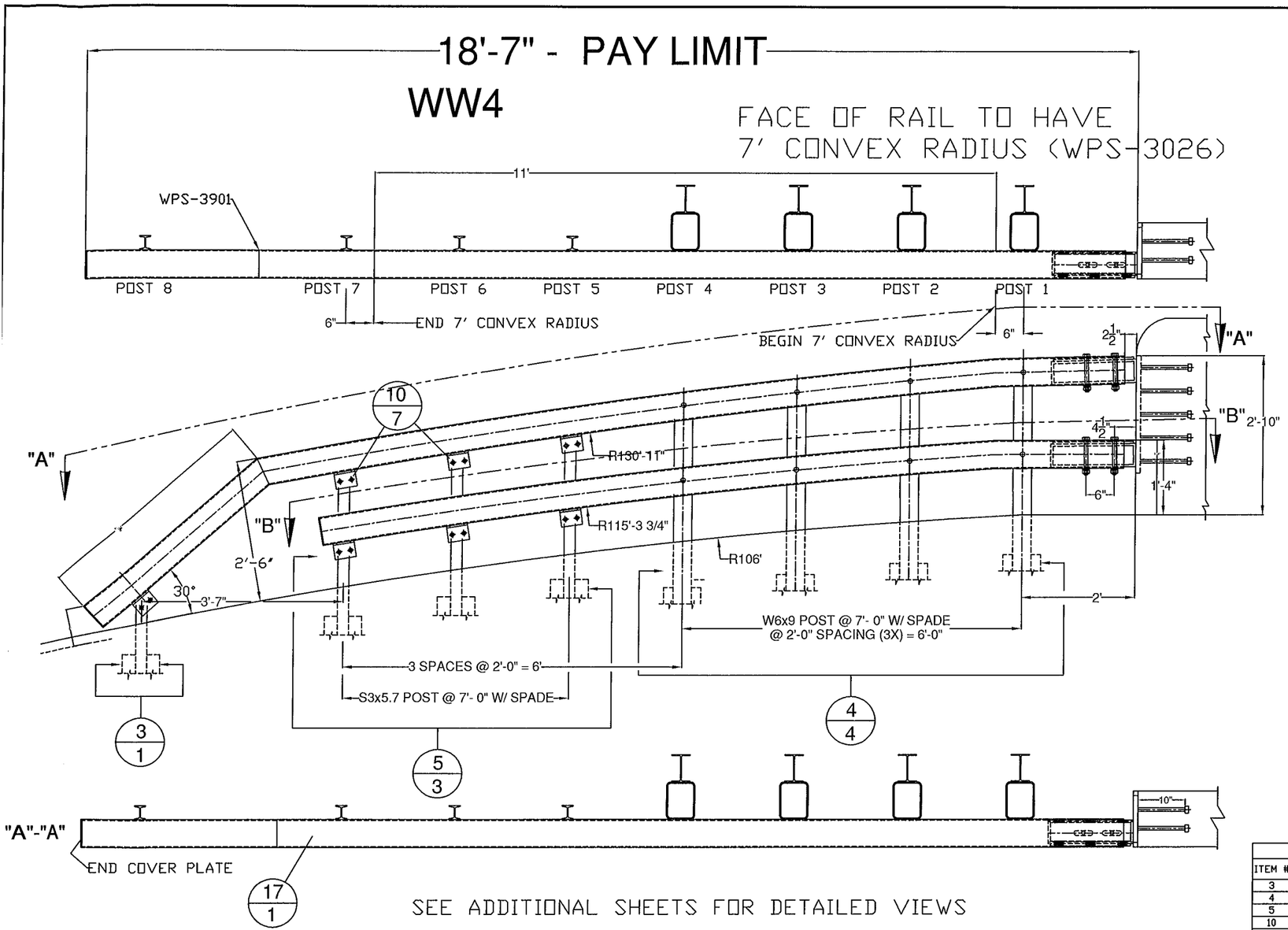

SEE ADDITIONAL SHEETS FOR DETAILED VIEWS

GUARD RAIL TO BRIDGE RAIL TRANSITION

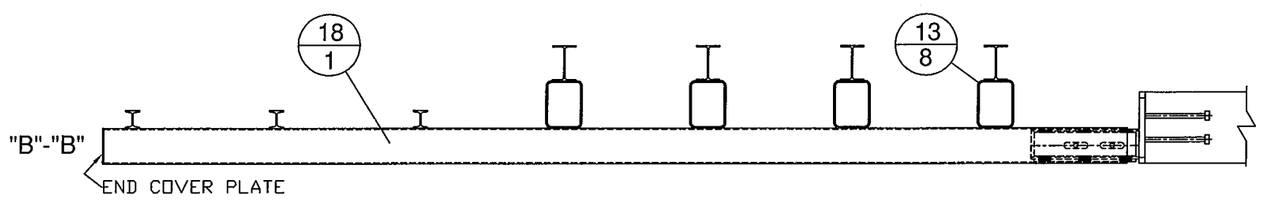

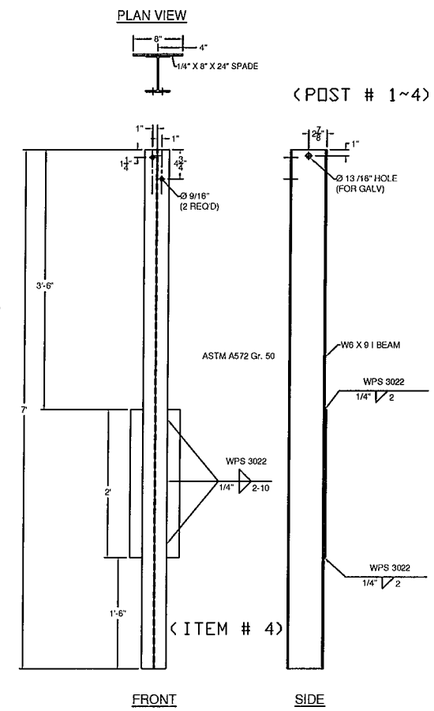

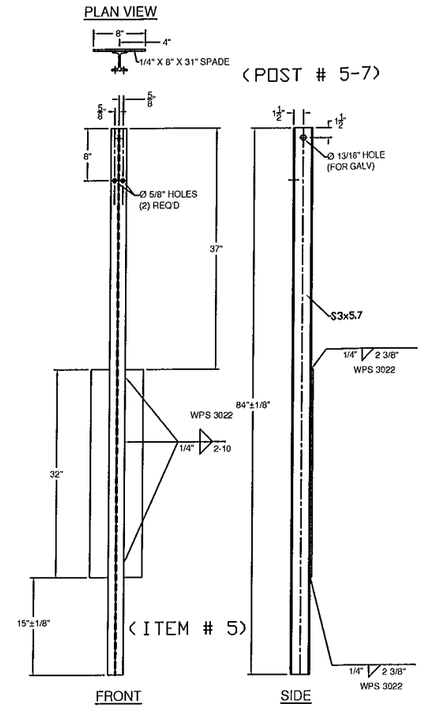

BILL OF MATERIALS, WW4				
ITEM #	QTY.	COMPONENT #	DESCRIPTION	MATERIAL (ASTM)
3	1	0013.57060	3' I-END POST W/SPD @ 3'-8' LG	ASTM A572 Gr. 50
4	4	-	W6X9 POST @ 7' W/SPD & ø9/16' HOLE (SPECIAL)	ASTM A572 Gr. 50
5	3	-	3' I-POST, PUNCH 8', W/8X32' SPADE @ 7' (SPECIAL)	ASTM A572 Gr. 50
10	7	0054.00050	REG BB SHELF ANGLES @ 4-1/2'	ASTM A709 Gr. 50
13	8	0054.00563	6X8' TRANS. TUBE B/O @ 6' LG	A500 Gr. B
17	1	-	6X6' BB TOP TRANS @ 15'-5 1/2' LG W/ TURNDOWN & 7' CONVEX RADIUS	A500 Gr. B
18	1	-	6X6' BB BTM TRANS @ 14'-3 7/8' LG W/ 7' CONVEX RADIUS	A500 Gr. B
19	7	0080.03355	3/8' X 7 1/2' BOLT, NUT, & 2 FW	A307, A563, F436
20	7	0080.04100	1/2' x 1-1/2' BOLT, NUT, & FW	A307, A563, F436
21	16	0080.04120	1/2' x 1-1/2' BOLT, NUT, & 2 FW	A307, A563, F436
23	4	0080.06340	3/4' X 7-1/2' BOLT, NUT, 2 FW	A325, A563, F436
23	4		3/4' LOCK WASHER	ASME B18.21.1
24	8	0080.06370	3/4' X 8' CARR BOLT, NUT, FW & LW	A307, A563, F436

900.620 SPECIAL PROVISION (GUARDRAIL
ITEM #: APPROACH SECTION TO CONCRETE BRIDGE RAIL)

SHEET 1 OF 12

STRUCTURAL STEEL TO COMPLY W/ ASTM A6

TOLERANCE UNLESS OTHERWISE NOTED:
FRACTIONS = ± 1/16"
ANGLES = ± 1/2°
DIAMETERS = ± 1/32"

SPECIAL PROVISION, GRAS - CONCRETE COMBINATION BR.

ROUTE NO. T.H. 3 (CLASS 2), RURAL COLLECTOR , BRIDGE # 11
TOWN OF CLARENDON, RUTAND COUNTY, VT.

REV	NO.	DATE	DESCRIPTION	BY	REV	NO.	DATE	DESCRIPTION	BY
	1	3/10/16	REVISED PER 2/23/16 MARK-UP	E.P.					

ELDERLEE, INC.
OAKS CORNERS, NEW YORK 14518
email: dlong@elderlee.com / epeek@elderlee.com
Tel: 315-789-6670 Fax: 315-789-6615

AISC CERTIFIED FABRICATOR
ORTHOGRAPHIC PROJECTION

DRAWN	E.P.	01/29/16
CHECKED	D.L.	.
APPROVED	M.V.	.
SCALE	SCHEMATIC	
DRAWING NO.	FRL - CLARENDON - T	

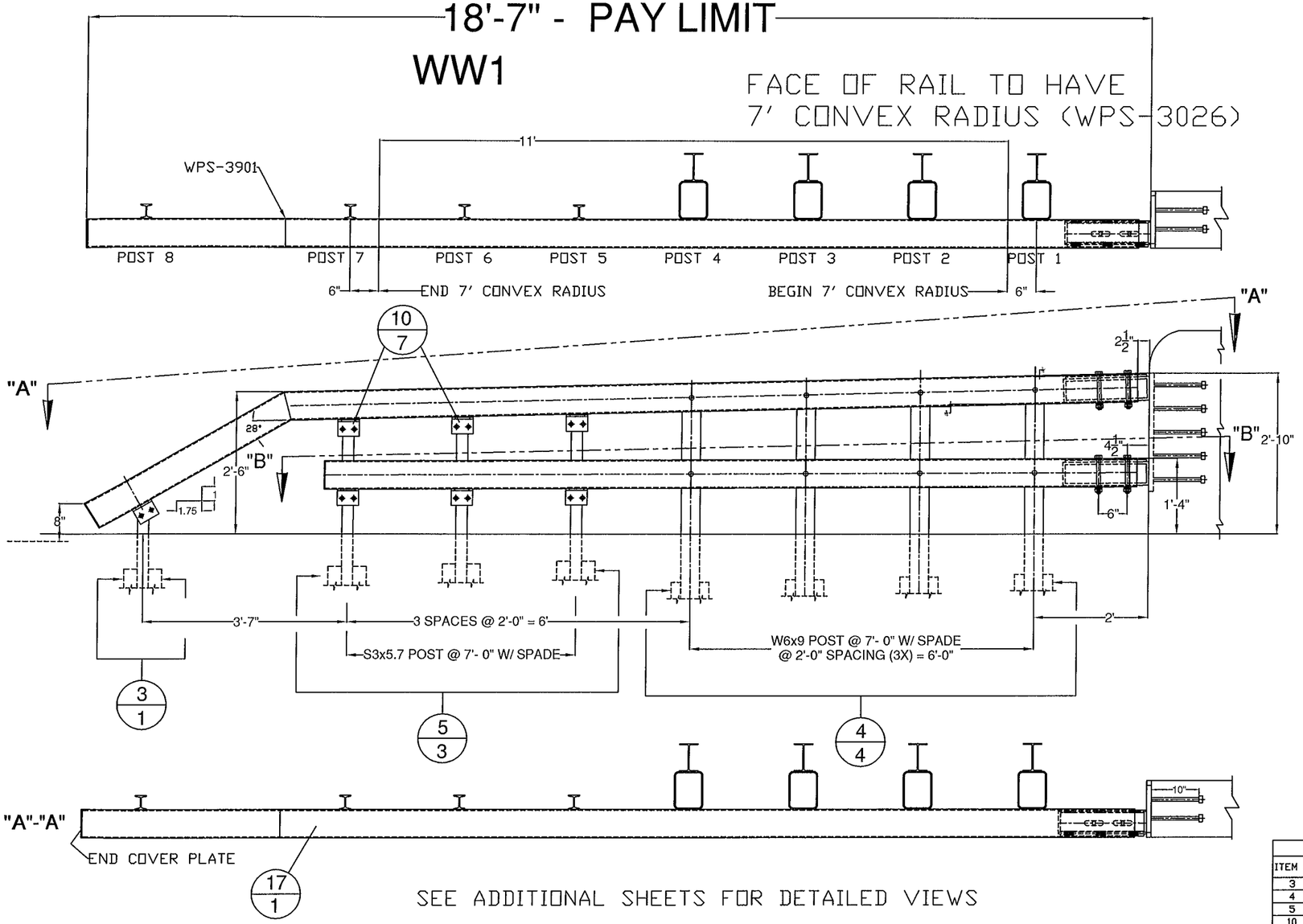

SEE ADDITIONAL SHEETS FOR DETAILED VIEWS

GUARD RAIL TO BRIDGE RAIL TRANSITION

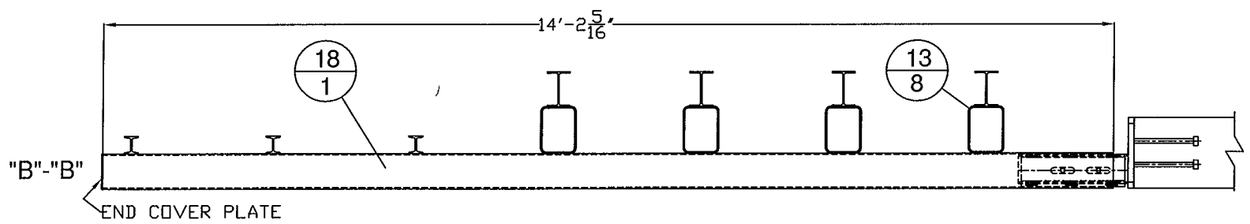

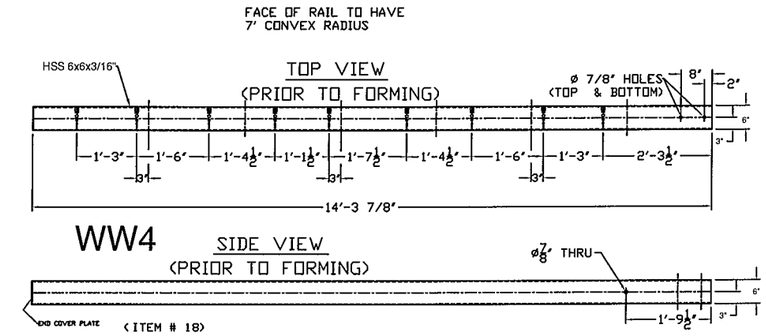

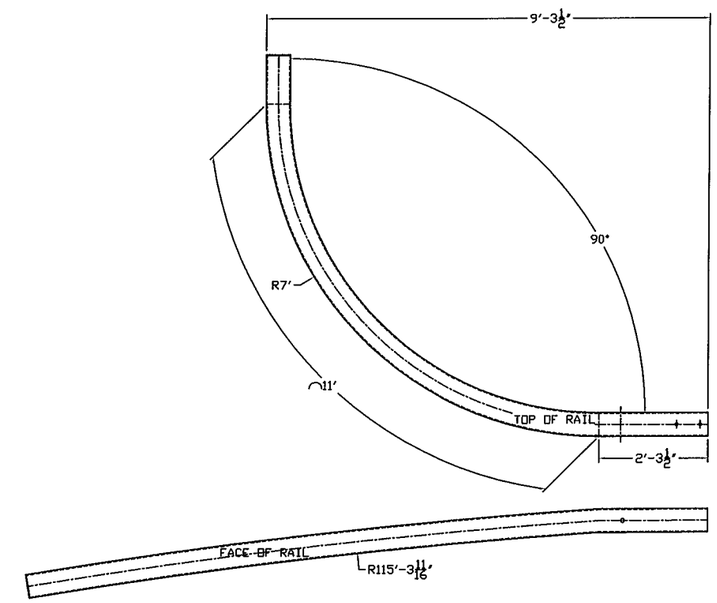

BILL OF MATERIALS, WW1

ITEM #	QTY.	COMPONENT #	DESCRIPTION	MATERIAL (ASTM)
3	1	0013.57060	3' I-END POST W/SPD @ 3'-8" LG	ASTM A572 Gr. 50
4	4	-	W6X9 POST @ 7' W/SPD & ø9/16" HOLES @ VARIOUS	ASTM A572 Gr. 50
5	3	-	3' I-POST, PUNCH 8" & VARIOUS', W/8X32" SPADE @ 7'	ASTM A572 Gr. 50
10	7	0054.00050	REG BB SHELF ANGLES @ 4-1/2"	ASTM A709 Gr. 50
13	8	0054.00563	6X8" TRANS. TUBE B/D @ 6" LG	A500 Gr. B
17	1	-	6X6" BB TOP TRANS @ 14'-11 1/8" LG W/ TURNDOWN & 7' CONVEX RADIUS	A500 Gr. B
18	1	-	6X6" BB BTM TRANS @ 14'-2 5/16" LG W/ 7' CONVEX RADIUS	A500 Gr. B
19	7	0080.03355	3/8" X 7 1/2" BOLT, NUT, & 2 FW	A307, A563, F436
20	7	0080.04100	1/2" x 1-1/2" BOLT, NUT, & FW	A307, A563, F436
21	16	0080.04120	1/2" x 1-1/2" BOLT, NUT, & 2 FW	A307, A563, F436
23	4	0080.06340	3/4" X 7-1/2" BOLT, NUT, 2 FW	A325, A563, F436
23	4		3/4" LOCK WASHER	ASME B18.21.1
24	8	0080.06370	3/4" X 8" CARR BOLT, NUT, FW & LW	A307, A563, F436

900.620 SPECIAL PROVISION (GUARDRAIL
ITEM #: APPROACH SECTION TO CONCRETE BRIDGE RAIL)

SHEET 2 OF 12

STRUCTURAL STEEL TO COMPLY W/ ASTM A6

TOLERANCE UNLESS OTHERWISE NOTED:
FRACTIONS = ± 1/16"
ANGLES = ± 1/2°
DIAMETERS = ± 1/32"

SPECIAL PROVISION, GRAS - CONCRETE COMBINATION BR.

ROUTE NO. T.H. 3 (CLASS 2), RURAL COLLECTOR, BRIDGE # 11
TOWN OF CLARENDON, RUTAND COUNTY, VT.

R E V	NO.	DATE	DESCRIPTION	BY	R E V	NO.	DATE	DESCRIPTION	BY
	1	3/10/16	REVISED PER 2/23/16 MARK-UP	E.P.					

ELDERLEE, INC.
OAKS CORNERS, NEW YORK 14518
email: dlong@elderlee.com / epeek@elderlee.com
Tel: 315-789-6670 Fax: 315-789-6615

CERTIFIED FABRICATOR
ORTHOGRAPHIC PROJECTION

DRAWN	E.P.	01/29/16
CHECKED	D.L.	.
APPROVED	M.V.	.
SCALE	SCHEMATIC	
DRAWING NO.	FRL - CLARENDON - T	

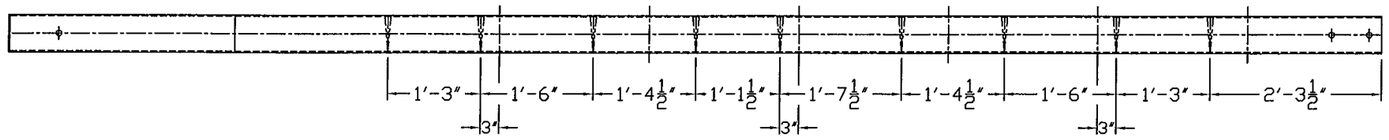

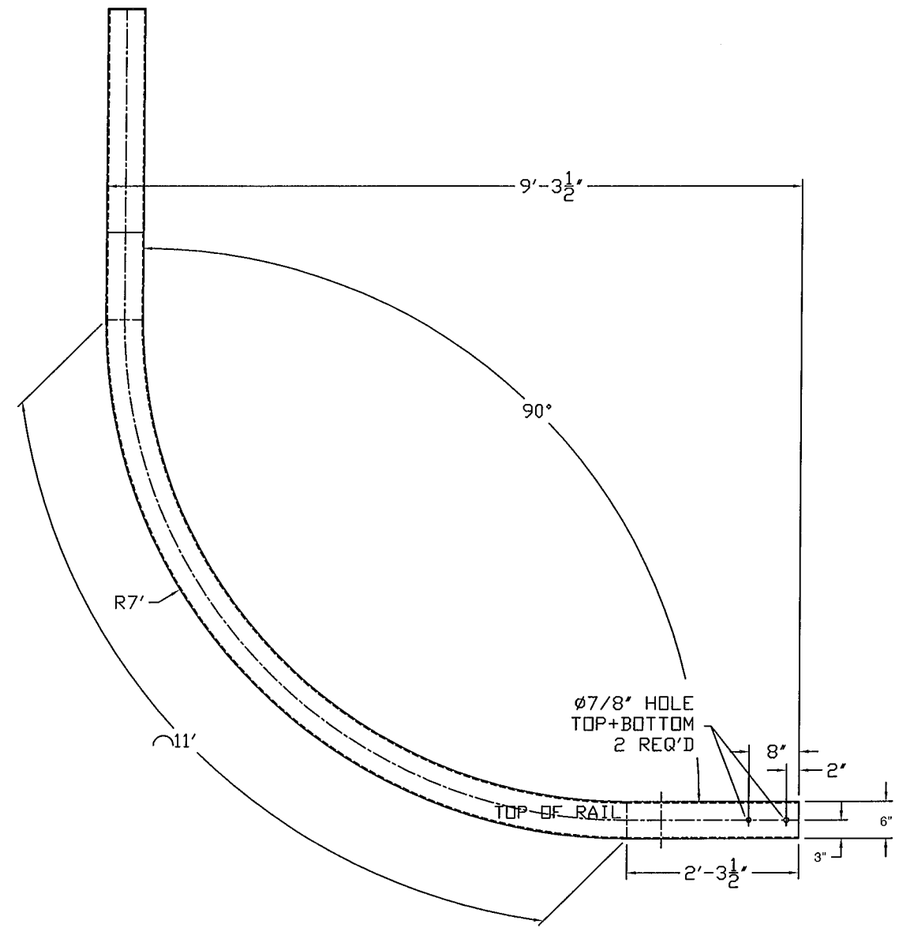

WW4

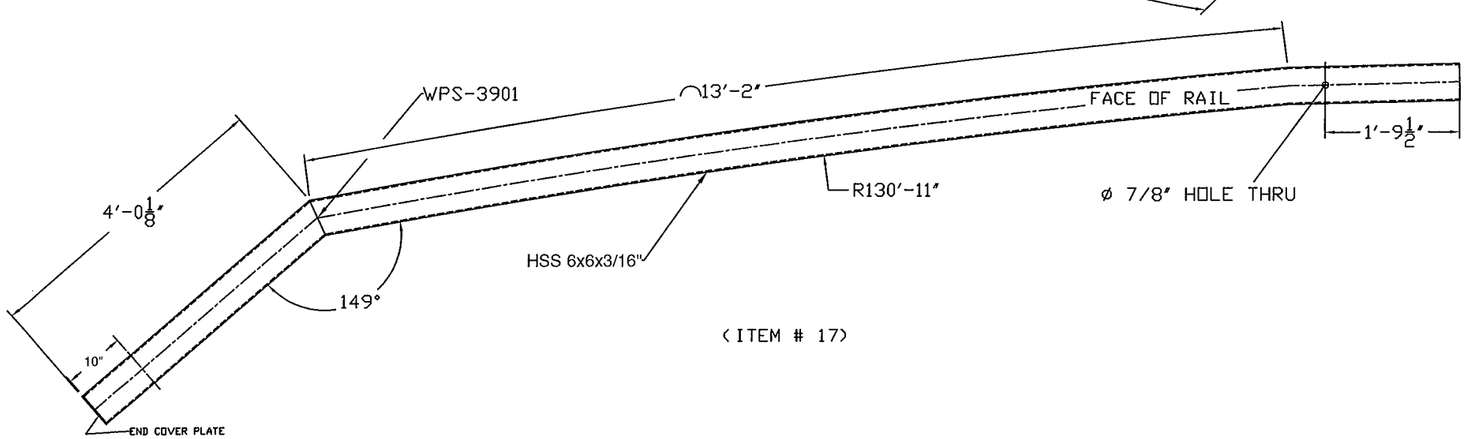

(ITEM # 17)

900.620 SPECIAL PROVISION (GUARDRAIL
ITEM #: APPROACH SECTION TO CONCRETE BRIDGE RAIL)

SHEET 3 OF 12

STRUCTURAL STEEL TO COMPLY W/ ASTM A6

TOLERANCE UNLESS OTHERWISE NOTED:
FRACTIONS = ± 1/16"
ANGLES = ± 1/2°
DIAMETERS = ± 1/32"

SPECIAL PROVISION, GRAS - CONCRETE COMBINATION BR.

ROUTE NO. T.H. 3 (CLASS 2), RURAL COLLECTOR, BRIDGE # 11
TOWN OF CLARENDON, RUTAND COUNTY, VT.

REV	NO.	DATE	DESCRIPTION	BY	REV	NO.	DATE	DESCRIPTION	BY
	1	3/10/16	REVISED PER 2/23/16 MARK-UP	E.P.					

ELDERLEE, INC.
OAKS CORNERS, NEW YORK 14518
email: dlong@elderlee.com / epeek@elderlee.com
Tel: 315-789-6670 Fax: 315-789-6615

CERTIFIED FABRICATOR
ORTHOGRAPHIC PROJECTION

DRAWN	E.P.	01/29/16
CHECKED	D.L.	.
APPROVED	M.V.	.
SCALE	SCHEMATIC	
DRAWING NO.	FRL - CLARENDON - T	

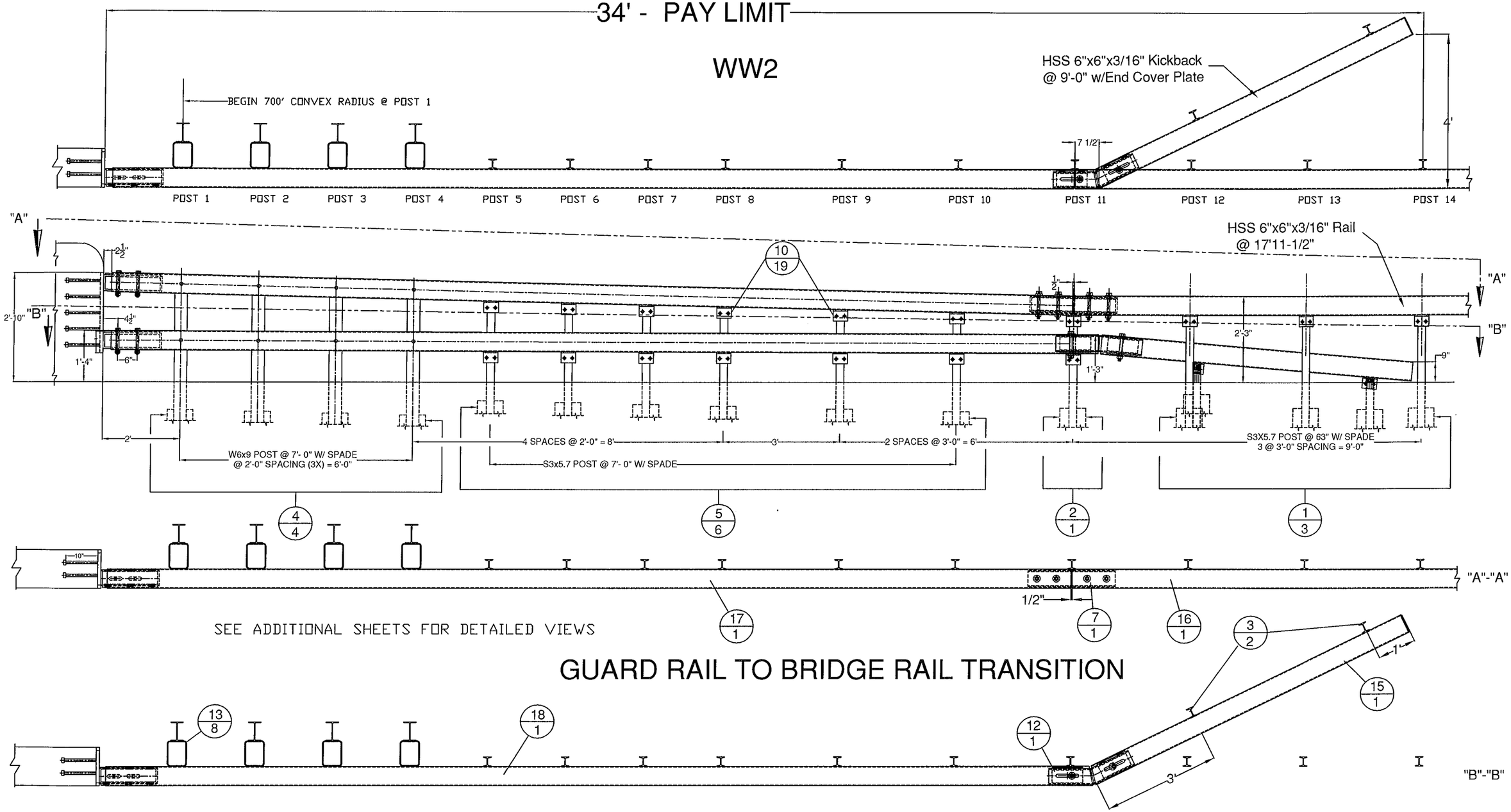

900.620 SPECIAL PROVISION (GUARDRAIL
ITEM #: APPROACH SECTION TO CONCRETE BRIDGE RAIL)

SHEET 4 OF 12

STRUCTURAL STEEL TO COMPLY W/ ASTM A6

TOLERANCE UNLESS OTHERWISE NOTED:
FRACTIONS = ± 1/16"
ANGLES = ± 1/2°
DIAMETERS = ± 1/32"

SPECIAL PROVISION, GRAS - CONCRETE COMBINATION BR.

ROUTE NO. T.H. 3 (CLASS 2), RURAL COLLECTOR, BRIDGE # 11
TOWN OF CLARENDON, RUTAND COUNTY, VT.

R E V	NO.	DATE	DESCRIPTION	BY	R E V	NO.	DATE	DESCRIPTION	BY
	1	3/10/16	REVISED PER 2/23/16 MARK-UP	E.P.					

ELDERLEE, INC.
OAKS CORNERS, NEW YORK 14518
email: dlong@elderlee.com / epeek@elderlee.com
Tel: 315-789-6670 Fax: 315-789-6615

AISC CERTIFIED FABRICATOR

ORTHOGRAPHIC PROJECTION

DRAWN	E.P.	01/29/16
CHECKED	D.L.	.
APPROVED	M.V.	.
SCALE	SCHEMATIC	
DRAWING NO.	FRL - CLARENDON - T	

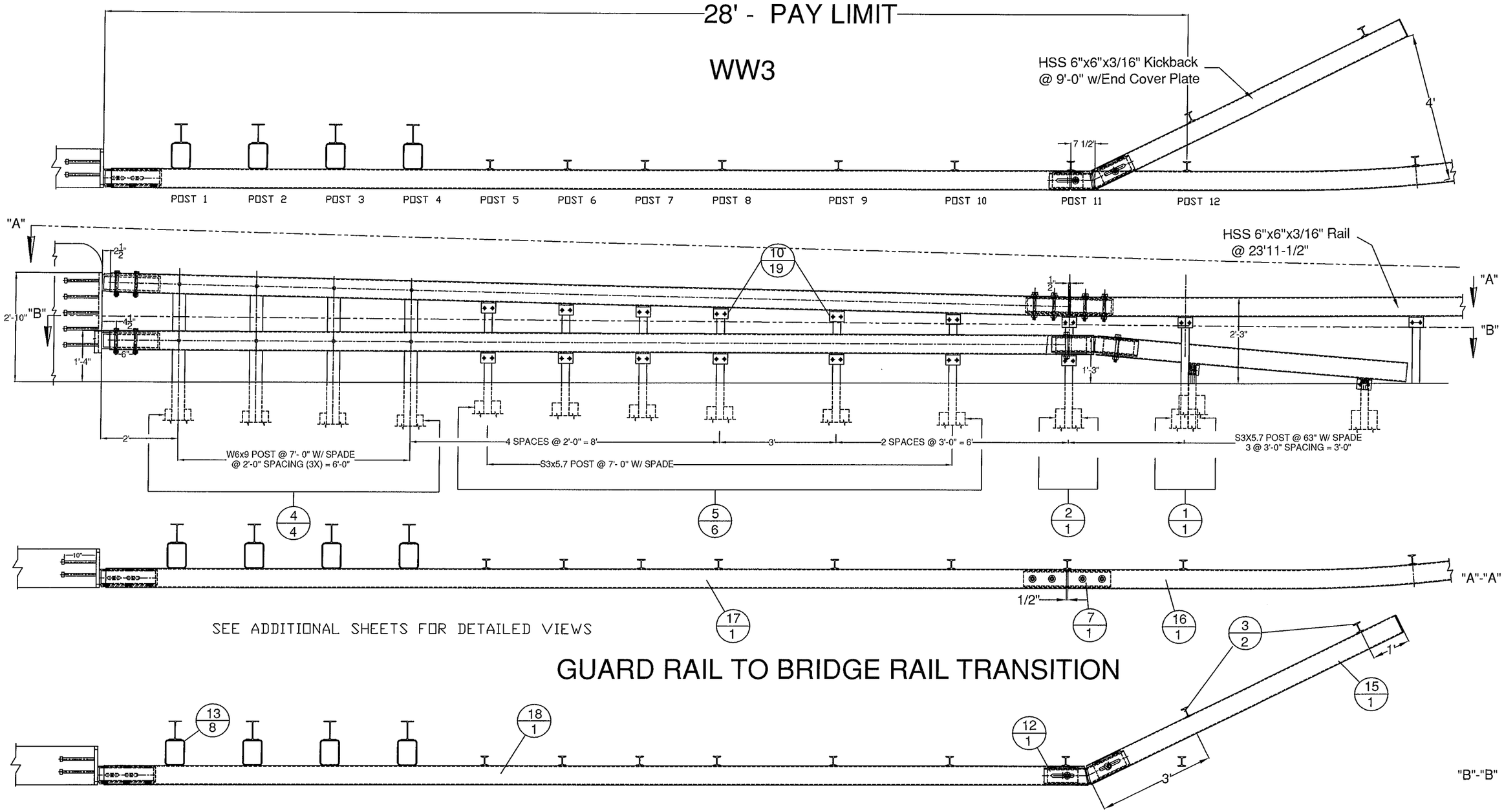

SEE ADDITIONAL SHEETS FOR DETAILED VIEWS

GUARD RAIL TO BRIDGE RAIL TRANSITION

GENERAL NOTES:

1) ALL RAILING IS TO BE FABRICATED AND ERECTED ACCORDING TO SECTION 525 OF THE STANDARD SPECIFICATIONS.
2) BOLTS SHALL BE TORQUED SNUG TIGHT (APPROXIMATELY 100 FT-LB).
3) PROTRUSIONS CAUSED BY WELDING OR GALVANIZING ARE NOT PERMITTED ON THE ADJOINING SURFACES OF THE BOX BEAM RAILS, SPLICE TUBES AND FILL PLATES.
4) ANY BENDING OF RAIL SHALL BE DONE AT THE FABRICATION PLANT. RADII GREATER THAN 16' TO BE CURVED ON A TUBE BENDING MACHINE, RADII LESS THAN 16' TO BE "PIE CUT" AND WELDED. CURVED RAILING WILL HAVE AN 18" LENGTH ON EACH END STRAIGHT TO ACCOMADATE SPLICES. "PIE CUTS ARE LOCATED SO AS TO NOT CONFLICT WITH POST FASTENING HOLES. PIE CUTS WILL BE WELDED ACCORDING TO

900.620 SPECIAL PROVISION (GUARDRAIL
ITEM #: APPROACH SECTION TO CONCRETE BRIDGE RAIL)

SHEET 5 OF 12

STRUCTURAL STEEL TO COMPLY W/ ASTM A6

TOLERANCE UNLESS OTHERWISE NOTED:
FRACTIONS = ± 1/16"
ANGLES = ± 1/2°
DIAMETERS = ± 1/32"

SPECIAL PROVISION, GRAS - CONCRETE COMBINATION BR.
ROUTE NO. T.H. 3 (CLASS 2), RURAL COLLECTOR, BRIDGE # 11
TOWN OF CLARENDON, RUTAND COUNTY, VT.

REV	NO.	DATE	DESCRIPTION	BY
E	1	3/10/16	REVISED PER 2/23/16 MARK-UP	E.P.
V				

REV	NO.	DATE	DESCRIPTION	BY
E				
V				

ELDERLEE, INC.
OAKS CORNERS, NEW YORK 14518
email: dlong@elderlee.com / epeck@elderlee.com
Tel: 315-789-6670 Fax: 315-789-6615

AISC CERTIFIED FABRICATOR

ORTHOGRAPHIC PROJECTION

DRAWN	E.P.	01/29/16
CHECKED	D.L.	.
APPROVED	M.V.	.
SCALE	SCHEMATIC	
DRAWING NO.	FRL - CLARENDON - T	

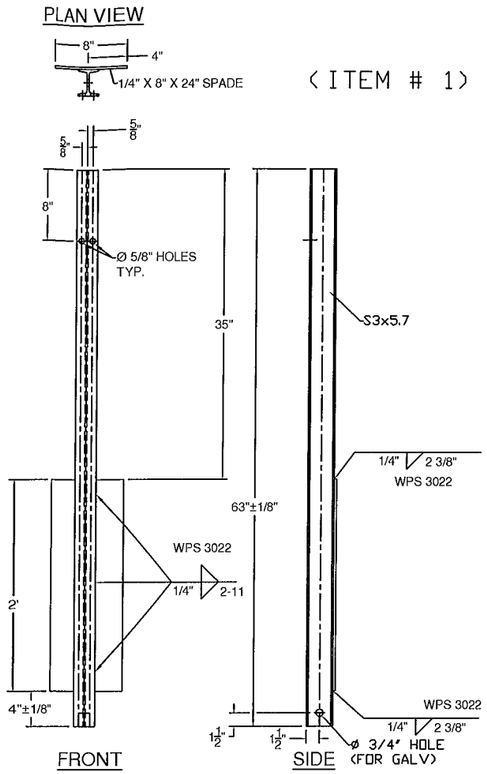

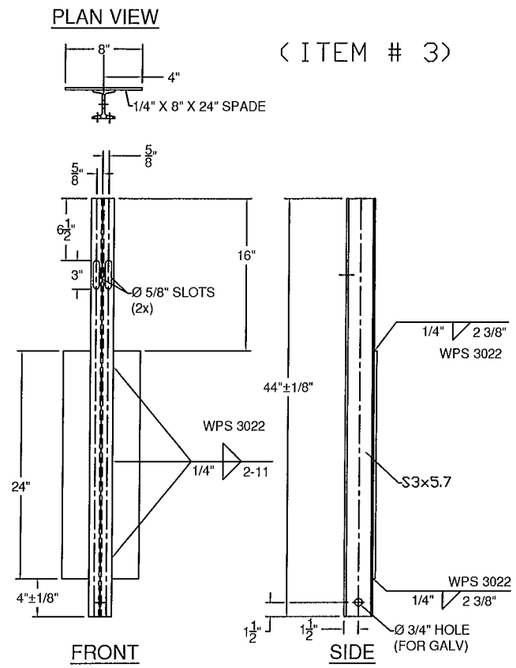

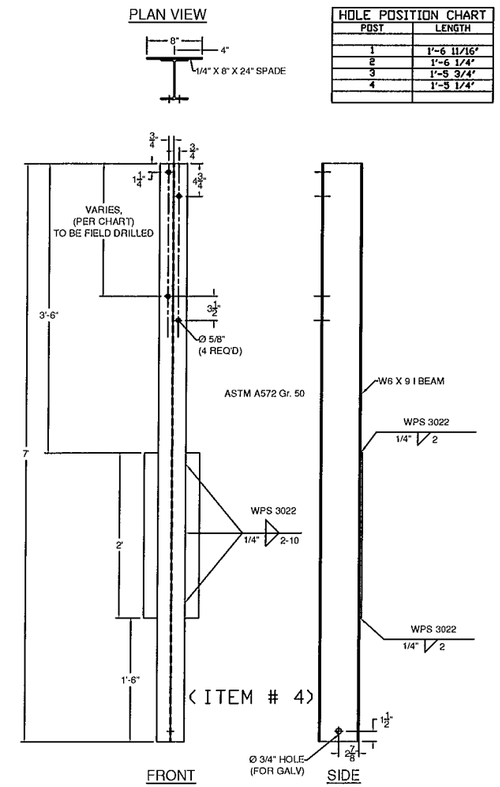

HOLE POSITION CHART	
POST	LENGTH
1	1'-6 11/16"
2	1'-6 1/4"
3	1'-5 3/4"
4	1'-5 1/4"

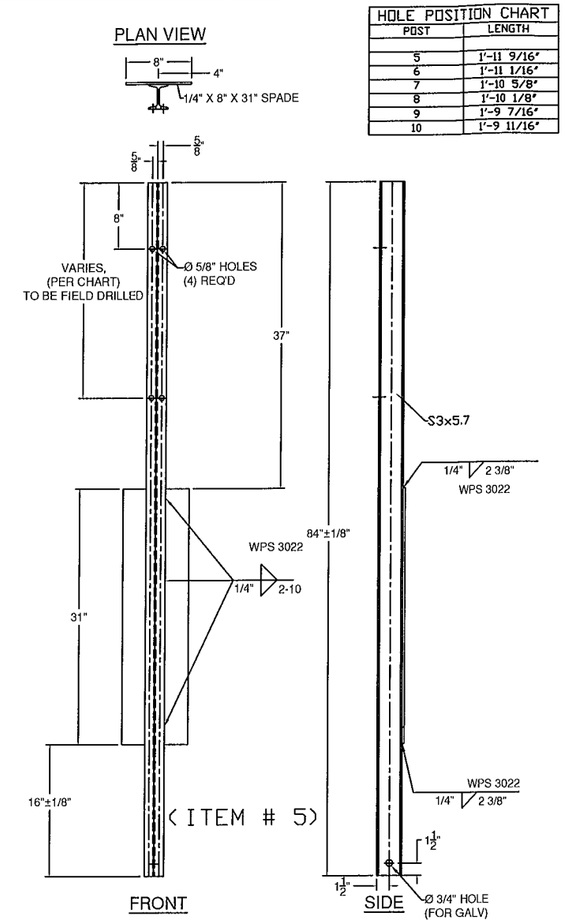

HOLE POSITION CHART	
POST	LENGTH
5	1'-11 9/16"
6	1'-11 1/16"
7	1'-10 5/8"
8	1'-10 1/8"
9	1'-9 7/16"
10	1'-9 11/16"

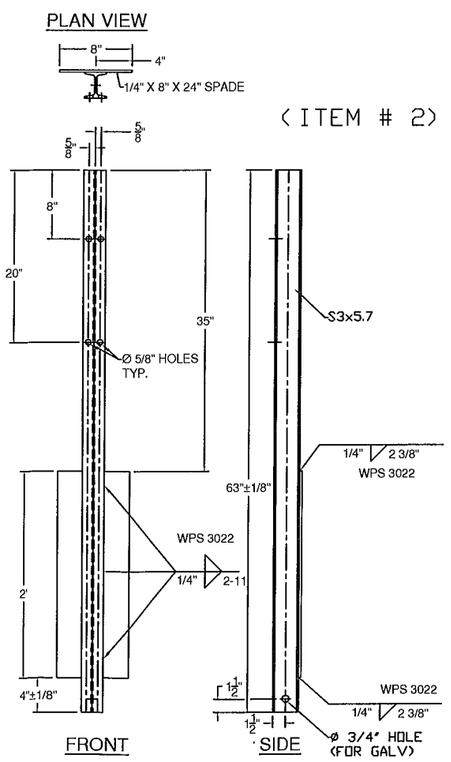

BILL OF MATERIALS, WW2

ITEM #	QTY.	COMPONENT #	DESCRIPTION	MATERIAL (ASTM)
1	3	0013.57021	3" I-POST, PUNCH 8" W/SPD @ 63" LG	ASTM A572 Gr. 50
2	1	0013.57025	3" I-POST W/SPD @ 63", PUNCH 8", & 20"	ASTM A572 Gr. 50
3	2	0013.57060	3" I-END POST W/SPD @ 3'-8" LG	ASTM A572 Gr. 50
4	4	-	W6X9 POST @ 7' W/SPD & Ø9/16" HOLES @ VARIOUS	ASTM A572 Gr. 50
5	6	-	3" I-POST, PUNCH 8" & VARIOUS", W/8X32" SPADE @ 7'	ASTM A572 Gr. 50
7	1	0033.00640	HSS 5X5 BENT TUBE SPLICE @ 27" LG W/ 1/4" SHIMS	A500 Gr. B / A572 Gr 50
10	19	0054.00050	REG BB SHELF ANGLES @ 4-1/2"	ASTM A709 Gr. 50
12	1	0054.00074	HSS 5X5 DBL BEND TUBE SPL @ 26 3/4" LG - 25° ANGLE	A500 Gr. B / A572 Gr 50
13	8	0054.00563	6X8" TRANS. TUBE B/Ø @ 6" LG	A500 Gr. B
15	1	0054.09000	6X6" BB @ 9'-0" KICKBACK, W/ CAP & 13° ANGLE	A500 Gr. B / A36
16	1	-	6X6" BB @ 17'-11 1/2", DRILL 3" CC (W/ 700" CONVEX RAD.)	A500 Gr. B
17	1	-	6X6" BB TOP TRANS @ 24'-9 5/16" LG (W/ 700" CONVEX RAD.)	A500 Gr. B
18	1	-	6X6" BB BTM TRANS @ 25'-5" LG (W/700" CONVEX RAD.)	A500 Gr. B
19	19	0080.03355	3/8" X 7 1/2" BOLT, NUT, & 2 FW	A307, A563, F436
20	19	0080.04100	1/2" x 1-1/2" BOLT, NUT, & FW	A307, A563, F436
21	16	0080.04120	1/2" x 1-1/2" BOLT, NUT, & 2 FW	A307, A563, F436
23	10	0080.06340	3/4" X 7-1/2" BOLT, NUT, 2 FW	A325, A563, F436
23	8		3/4" LOCK WASHER	ASME B18.21.1
24	8	0080.06370	3/4" X 8" CARR BOLT, NUT, FW & LW	A307, A563, F436

BILL OF MATERIALS, WW3

ITEM #	QTY.	COMPONENT #	DESCRIPTION	MATERIAL (ASTM)
1	1	0013.57021	3" I-POST, PUNCH 8" W/SPD @ 63" LG	ASTM A572 Gr. 50
2	1	0013.57025	3" I-POST W/SPD @ 63", PUNCH 8", & 20"	ASTM A572 Gr. 50
3	2	0013.57060	3" I-END POST W/SPD @ 3'-8" LG	ASTM A572 Gr. 50
4	4	-	W6X9 POST @ 7' W/SPD & Ø9/16" HOLES @ VARIOUS	ASTM A572 Gr. 50
5	6	-	3" I-POST, PUNCH 8" & VARIOUS", W/8X31" SPADE @ 7'	ASTM A572 Gr. 50
7	1	0033.00640	HSS 5X5 BENT TUBE SPLICE @ 27" LG W/ 1/4" SHIMS	A500 Gr. B / A572 Gr 50
10	19	0054.00050	REG BB SHELF ANGLES @ 4-1/2"	ASTM A709 Gr. 50
12	1	0054.00074	HSS 5X5 DBL BEND TUBE SPL @ 26 3/4" LG - 27° ANGLE	A500 Gr. B / A572 Gr 50
13	8	0054.00563	6X8" TRANS. TUBE B/Ø @ 6" LG	A500 Gr. B
15	1	0054.09000	6X6" BB @ 9'-0" KICKBACK, W/ CAP & 13° ANGLE	A500 Gr. B / A36
16	1	0054.18000	6X6" BB @ 23'-11 1/2", DRILL 3" CC	A500 Gr. B
17	1	-	6X6" BB TOP TRANS @ 24'-9 5/16" LG	A500 Gr. B
18	1	-	6X6" BB BTM TRANS @ 25'-5" LG	A500 Gr. B
19	17	0080.03355	3/8" X 7 1/2" BOLT, NUT, & 2 FW	A307, A563, F436
20	17	0080.04100	1/2" x 1-1/2" BOLT, NUT, & FW	A307, A563, F436
21	16	0080.04120	1/2" x 1-1/2" BOLT, NUT, & 2 FW	A307, A563, F436
23	10	0080.06340	3/4" X 7-1/2" BOLT, NUT, 2 FW	A325, A563, F436
23	8		3/4" LOCK WASHER	ASME B18.21.1
24	8	0080.06370	3/4" X 8" CARR BOLT, NUT, FW & LW	A307, A563, F436

HARDWARE NOTES

ITEM #	FUNCTION
19	BOLT RAIL TO SHELF ANGLE (ITEM #10)
20	BOLT SHELF ANGLE (ITEM # 10) TO POST
21	BOLT BLOCK-OUTS (ITEM # 13) TO HEAVY POST (ITEM # 4)
23	SPLICE TUBING (ITEM #'S 7 & 12), & (4) PER PARAPET WALL CONNECTION
24	BOLT RAIL (ITEMS #'S 17, & 18 TO BLOCK-OUTS (ITEM # 13)

900.620 SPECIAL PROVISION (GUARDRAIL
ITEM #: APPROACH SECTION TO CONCRETE BRIDGE RAIL)

SHEET 6 OF 12

STRUCTURAL STEEL TO COMPLY W/ ASTM A6

TOLERANCE UNLESS OTHERWISE NOTED:
FRACTIONS = ± 1/16"
ANGLES = ± 1/2°
DIAMETERS = ± 1/32"

SPECIAL PROVISION, GRAS - CONCRETE COMBINATION BR.

ROUTE NO. T.H. 3 (CLASS 2), RURAL COLLECTOR , BRIDGE # 11
TOWN OF CLARENDON, RUTAND COUNTY, VT.

R E V	NO.	DATE	DESCRIPTION	BY	R E V	NO.	DATE	DESCRIPTION	BY
	1	3/10/16	REVISED PER 2/23/16 MARK-UP	E.P.					

ELDERLEE, INC.
OAKS CORNERS, NEW YORK 14518
email: dlong@elderlee.com / epeek@elderlee.com
Tel: 315-789-6670 Fax: 315-789-6615

CERTIFIED FABRICATOR
ORTHOGRAPHIC PROJECTION

DRAWN	E.P.	01/29/16
CHECKED	D.L.	
APPROVED	M.V.	.
SCALE	SCHEMATIC	
DRAWING NO.	FRL - CLARENDON - T	

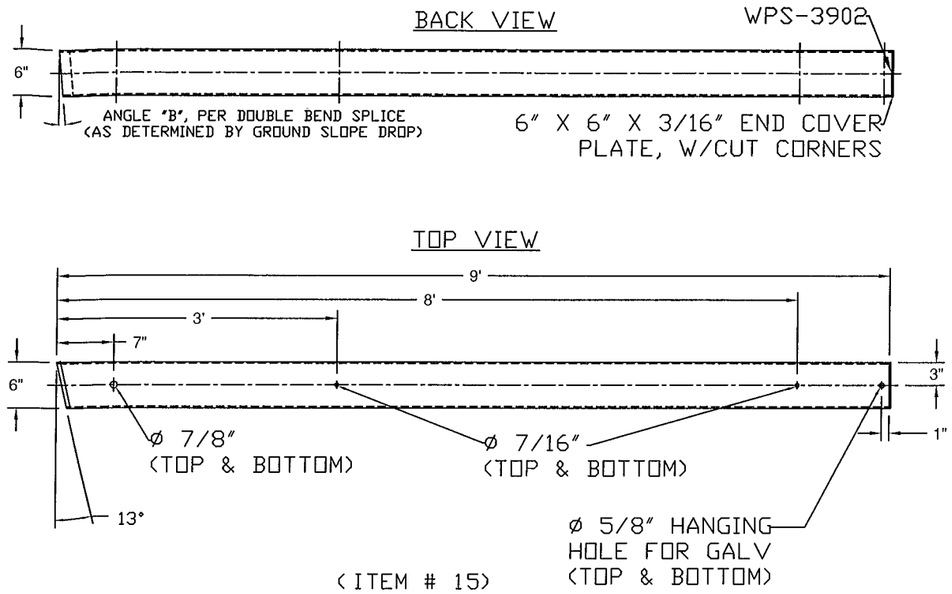

(ITEM # 15)

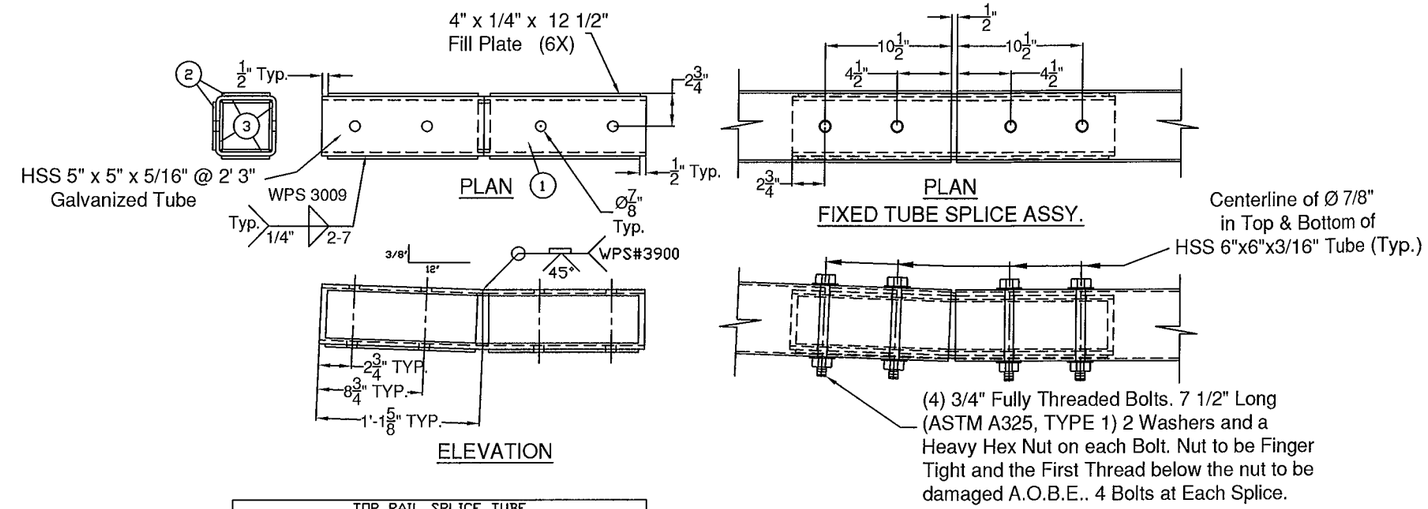

TOP RAIL SPLICE TUBE		
ITEM#	QTY.	DESCRIPTION
1	2	5" X 5" X 5/16" TUBE @ 27' ASTM A500 Gr. B
2	6	1/4" X 4" X 12 1/2" ASTM A36(A709 Gr36)CVN
3	4	3/16" X 1" X 4" BACKER PLATE

(ITEM # 7)

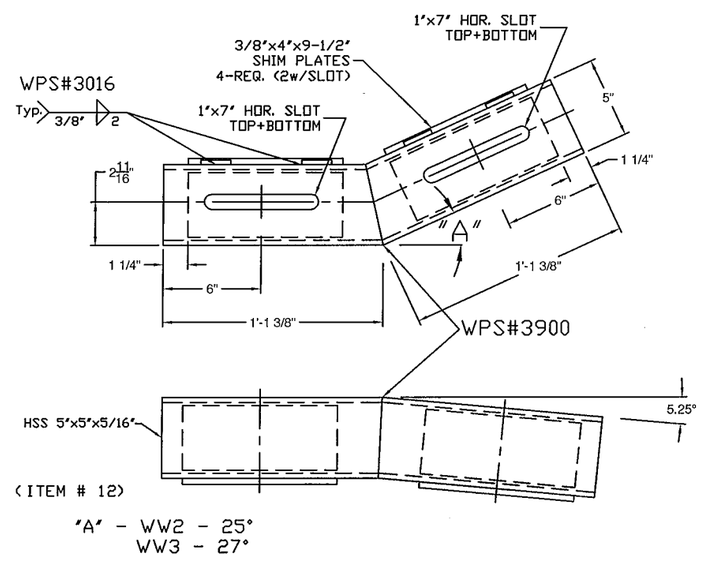

(ITEM # 12)

"A" - WW2 - 25°
WW3 - 27°

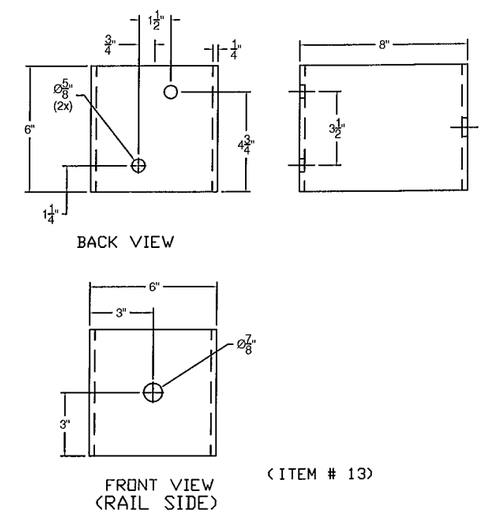

(ITEM # 13)

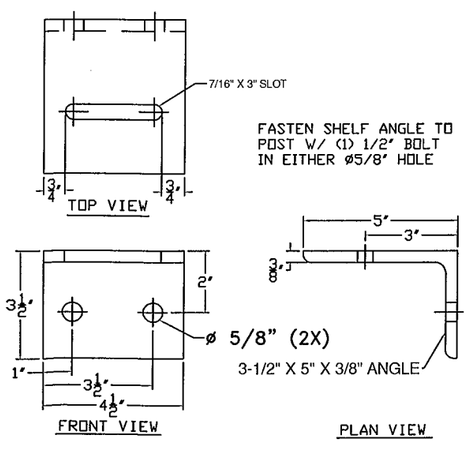

(ITEM # 10)

900.620 SPECIAL PROVISION (GUARDRAIL
ITEM #: APPROACH SECTION TO CONCRETE BRIDGE RAIL)

SHEET 7 OF 12

STRUCTURAL STEEL TO COMPLY W/ ASTM A6

TOLERANCE UNLESS OTHERWISE NOTED:
FRACTIONS = ± 1/16"
ANGLES = ± 1/2°
DIAMETERS = ± 1/32"

SPECIAL PROVISION, GRAS - CONCRETE COMBINATION BR.

ROUTE NO. T.H. 3 (CLASS 2), RURAL COLLECTOR, BRIDGE # 11
TOWN OF CLARENDON, RUTAND COUNTY, VT.

REV	NO.	DATE	DESCRIPTION	BY	REV	NO.	DATE	DESCRIPTION	BY
	1	3/10/16	REVISED PER 2/23/16 MARK-UP	E.P.					

ELDERLEE, INC.
OAKS CORNERS, NEW YORK 14518
email: dlong@elderlee.com / epeek@elderlee.com
Tel: 315-789-6670 Fax: 315-789-6615

AISC CERTIFIED FABRICATOR

ORTHOGRAPHIC PROJECTION

DRAWN	E.P.	01/29/16
CHECKED	D.L.	
APPROVED	M.V.	
SCALE	SCHEMATIC	
DRAWING NO.	FRL - CLARENDON - T	

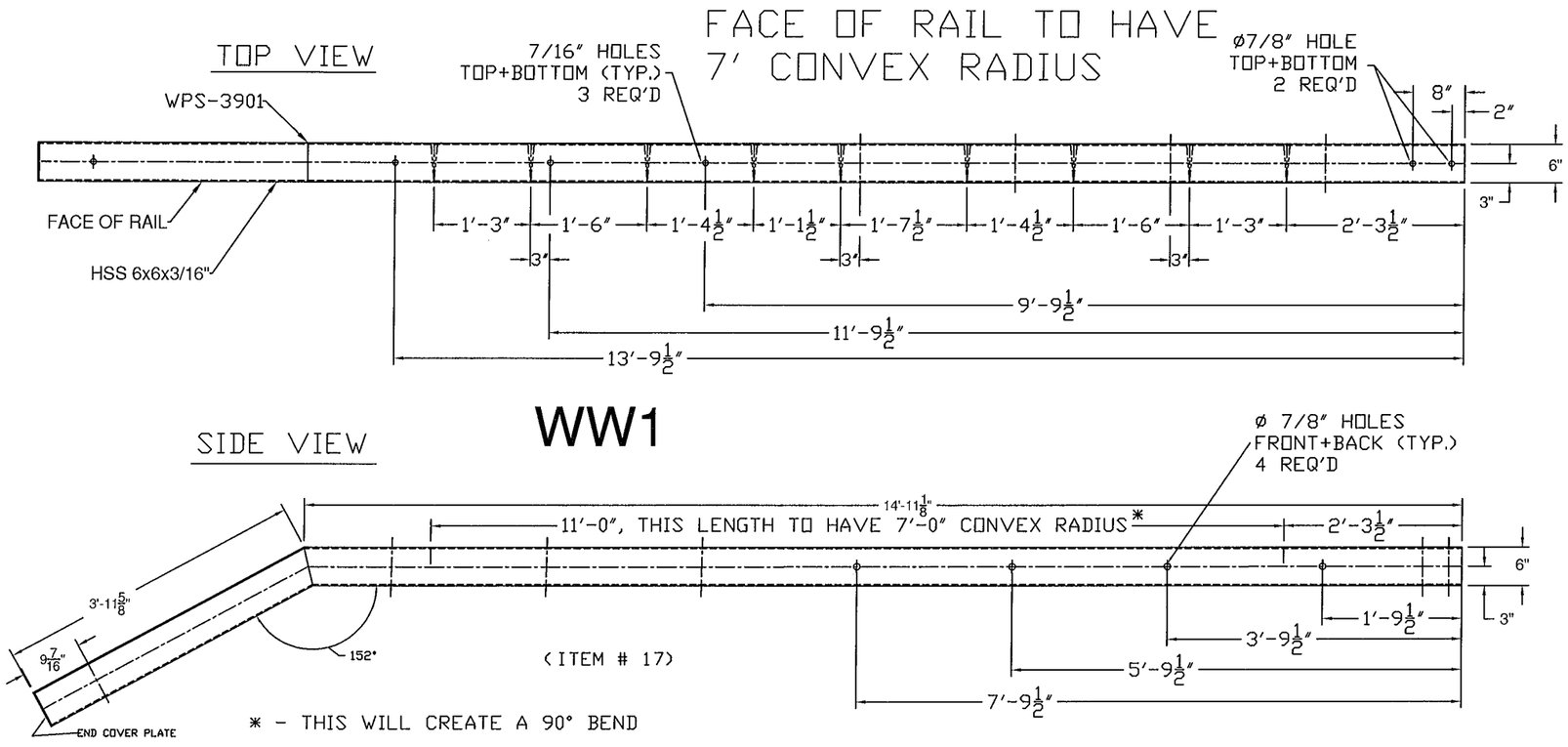

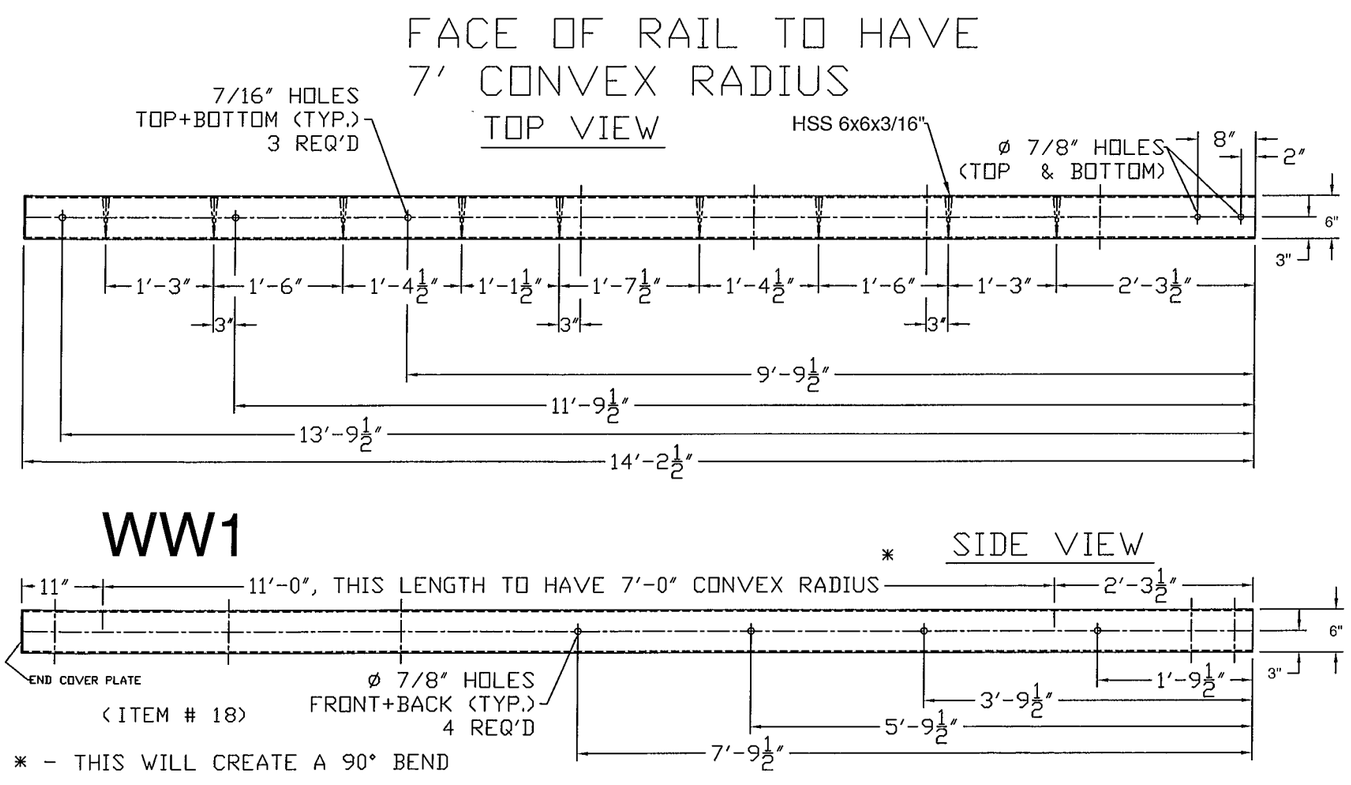

900.620 SPECIAL PROVISION (GUARDRAIL
ITEM #: APPROACH SECTION TO CONCRETE BRIDGE RAIL)

SHEET 8 OF 12

STRUCTURAL STEEL TO COMPLY W/ ASTM A6

TOLERANCE UNLESS OTHERWISE NOTED:
FRACTIONS = ± 1/16"
ANGLES = ± 1/2°
DIAMETERS = ± 1/32"

SPECIAL PROVISION, GRAS - CONCRETE COMBINATION BR.

ROUTE NO. T.H. 3 (CLASS 2), RURAL COLLECTOR, BRIDGE # 11
TOWN OF CLARENDON, RUTAND COUNTY, VT.

REV	NO.	DATE	DESCRIPTION	BY	REV	NO.	DATE	DESCRIPTION	BY
	1	3/10/16	REVISED PER 2/23/16 MARK-UP	E.P.					

ELDERLEE, INC.
OAKS CORNERS, NEW YORK 14518
email: dlong@elderlee.com / epeek@elderlee.com
Tel: 315-789-6670 Fax: 315-789-6615

AISC CERTIFIED FABRICATOR

ORTHOGRAPHIC PROJECTION

DRAWN	E.P.	01/29/16
CHECKED	D.L.	
APPROVED	M.V.	
SCALE	SCHEMATIC	
DRAWING NO.	FRL - CLARENDON - T	

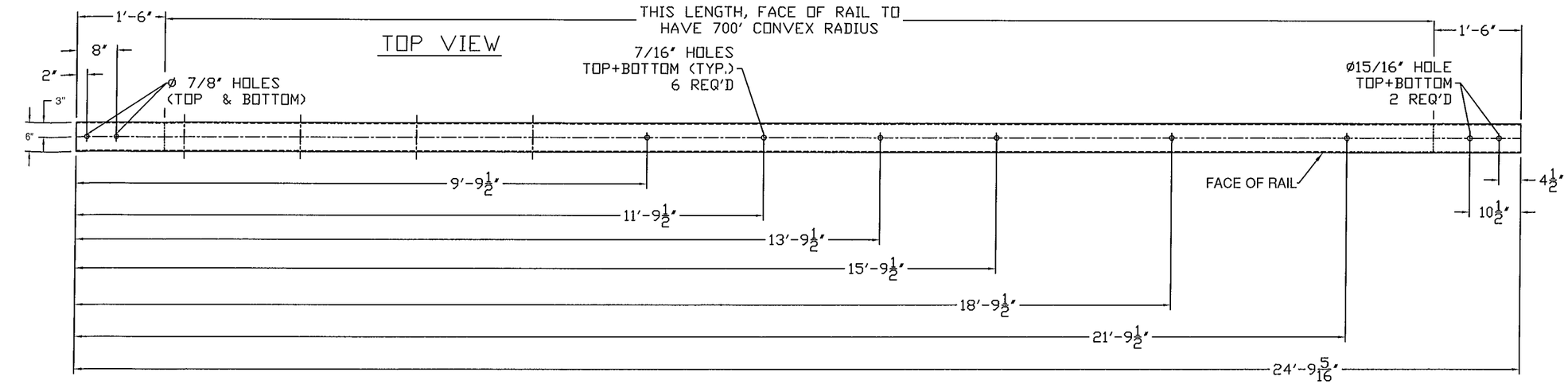

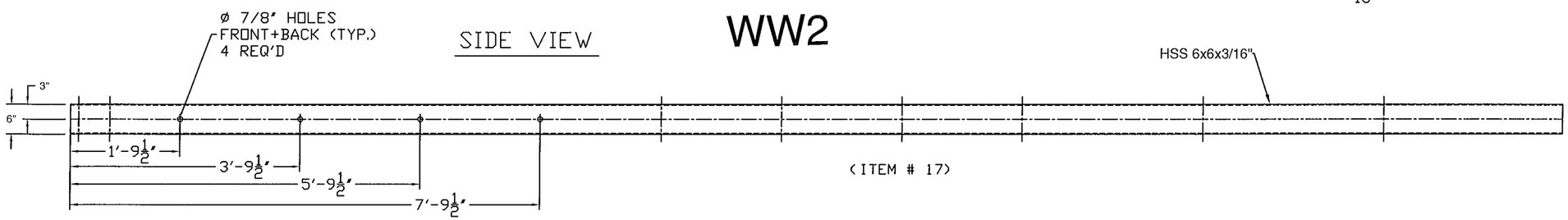

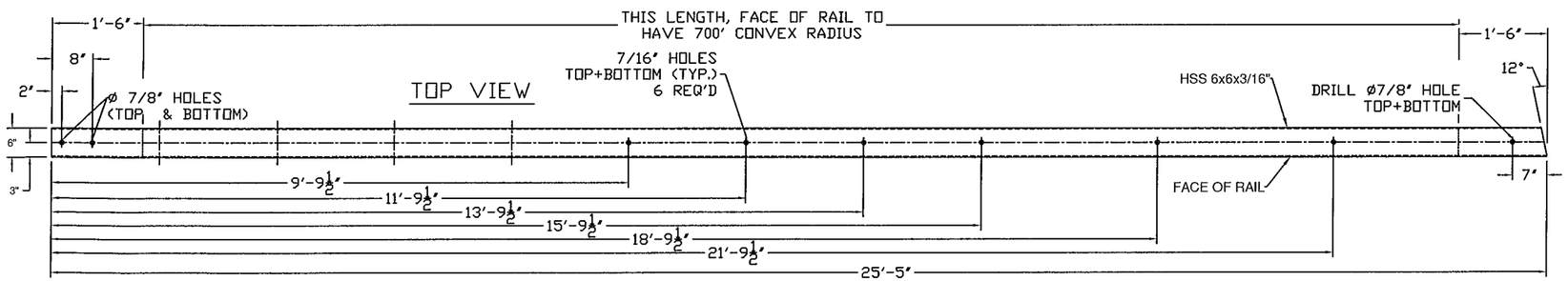

WW 2

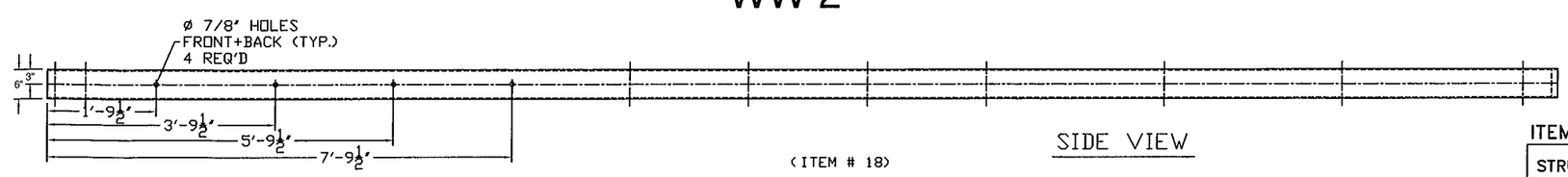

ITEM #: 900.620 SPECIAL PROVISION (GUARDRAIL APPROACH SECTION TO CONCRETE BRIDGE RAIL)

SHEET 9 OF 12

STRUCTURAL STEEL TO COMPLY W/ ASTM A6

TOLERANCE UNLESS OTHERWISE NOTED:
FRACTIONS = ± 1/16"
ANGLES = ± 1/2°
DIAMETERS = ± 1/32"

SPECIAL PROVISION, GRAS - CONCRETE COMBINATION BR.

ROUTE NO. T.H. 3 (CLASS 2), RURAL COLLECTOR, BRIDGE # 11
TOWN OF CLARENDON, RUTAND COUNTY, VT.

REV	NO.	DATE	DESCRIPTION	BY
	1	3/10/16	REVISED PER 2/23/16 MARK-UP	E.P.

REV	NO.	DATE	DESCRIPTION	BY

ELDERLEE, INC.
OAKS CORNERS, NEW YORK 14518
email: dlong@elderlee.com / epeek@elderlee.com
Tel: 315-789-6670 Fax: 315-789-6615

AISC CERTIFIED FABRICATOR

ORTHOGRAPHIC PROJECTION

DRAWN	E.P.	01/29/16
CHECKED	D.L.	
APPROVED	M.V.	
SCALE	SCHEMATIC	
DRAWING NO.	FRL - CLARENDON - T	

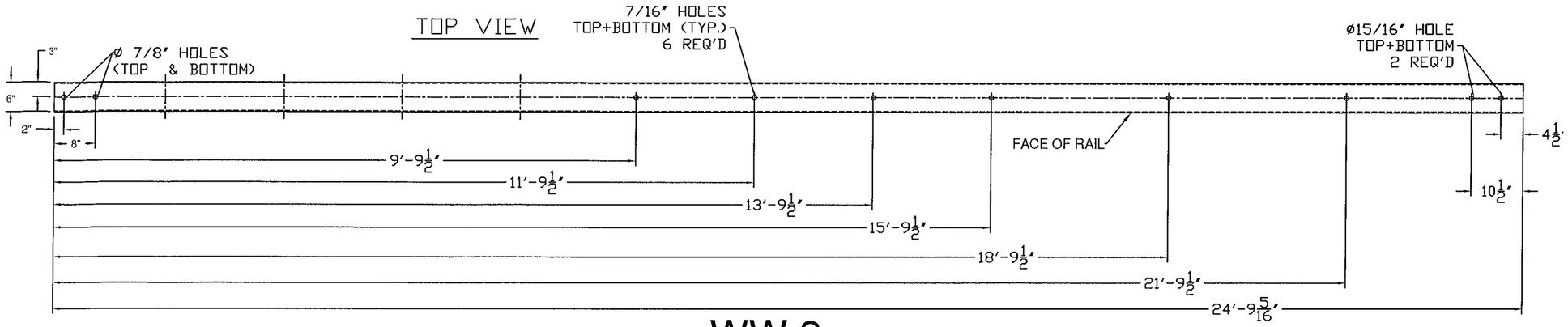

WW 3

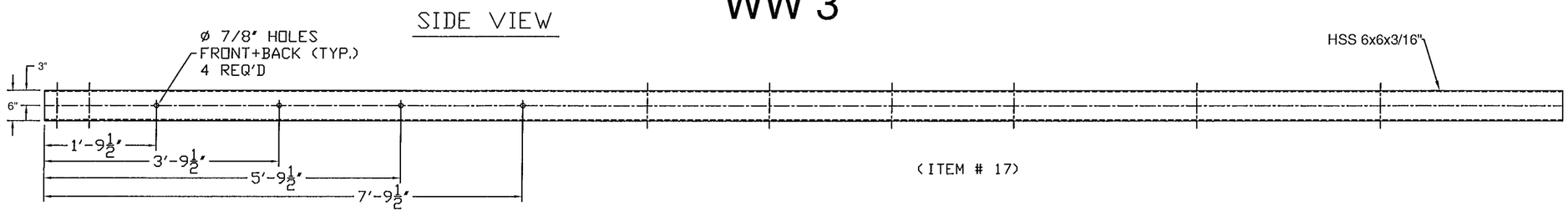

(ITEM # 17)

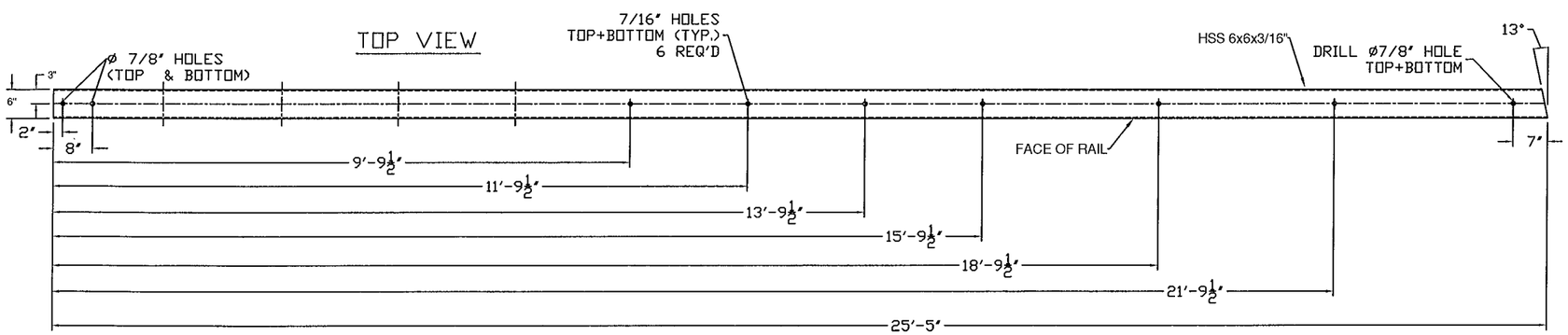

WW 3

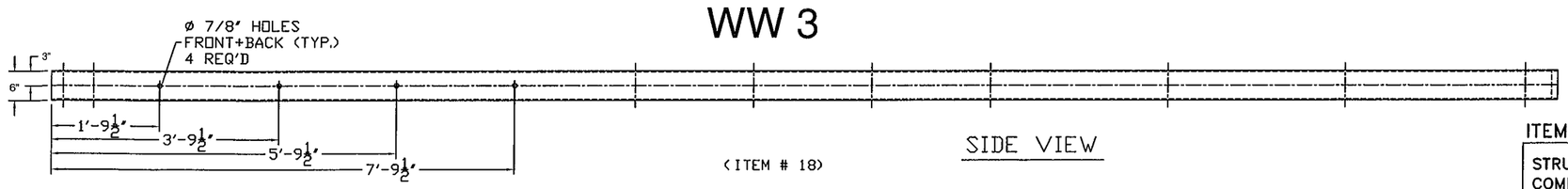

(ITEM # 18)

SIDE VIEW

900.620 SPECIAL PROVISION (GUARDRAIL
ITEM #: APPROACH SECTION TO CONCRETE BRIDGE RAIL)

SHEET 10 OF 12

STRUCTURAL STEEL TO COMPLY W/ ASTM A6

TOLERANCE UNLESS OTHERWISE NOTED:
FRACTIONS = ± 1/16"
ANGLES = ± 1/2°
DIAMETERS = ± 1/32"

SPECIAL PROVISION, GRAS - CONCRETE COMBINATION BR.

ROUTE NO. T.H. 3 (CLASS 2), RURAL COLLECTOR, BRIDGE # 11
TOWN OF CLARENDON, RUTAND COUNTY, VT.

REV	NO.	DATE	DESCRIPTION	BY	REV	NO.	DATE	DESCRIPTION	BY
	1	3/10/16	REVISED PER 2/23/16 MARK-UP	E.P.					

ELDERLEE, INC.
OAKS CORNERS, NEW YORK 14518
email: dlong@elderlee.com / epeek@elderlee.com
Tel: 315-789-6670 Fax: 315-789-6615

AISC CERTIFIED FABRICATOR

ORTHOGRAPHIC PROJECTION

DRAWN	E.P.	01/29/16
CHECKED	D.L.	
APPROVED	M.V.	.
SCALE	SCHEMATIC	
DRAWING NO.	FRL - CLARENDON - T	

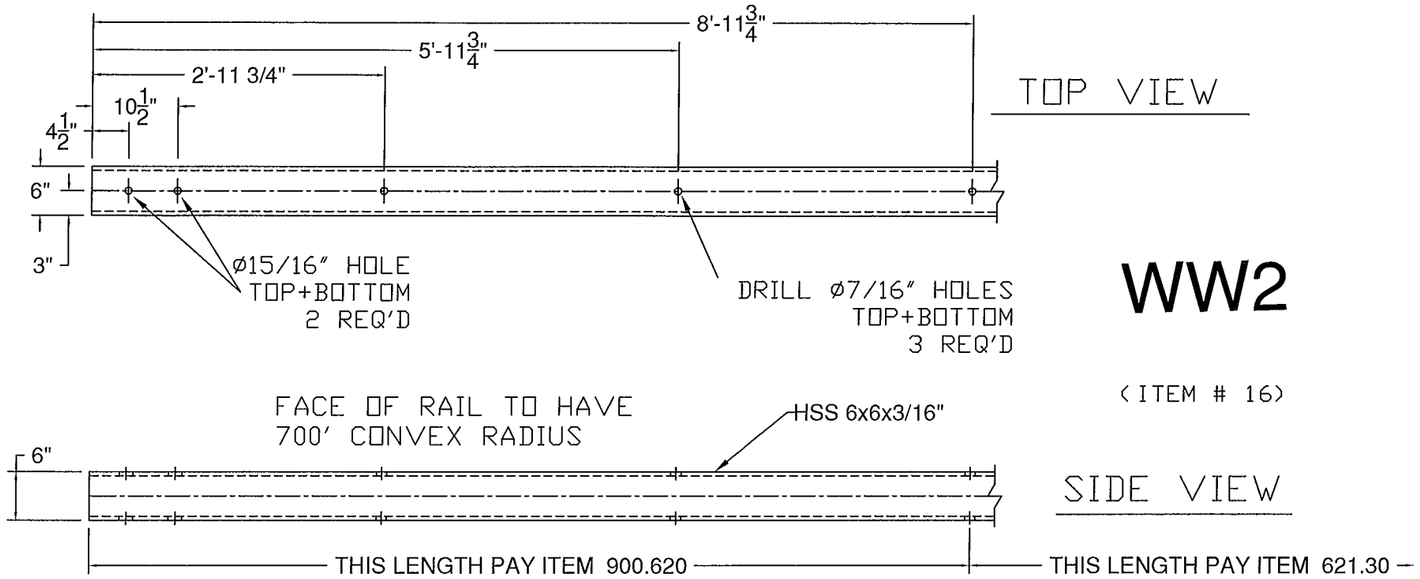

WW2

(ITEM # 16)

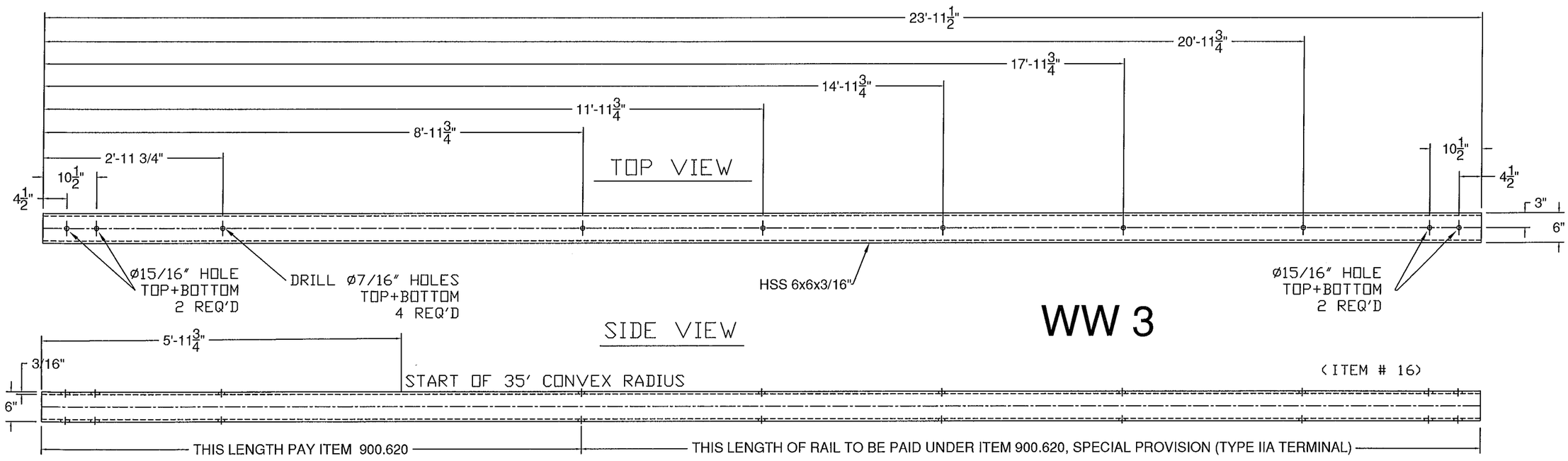

WW 3

(ITEM # 16)

900.620 SPECIAL PROVISION (GUARDRAIL
ITEM #: APPROACH SECTION TO CONCRETE BRIDGE RAIL)

SHEET 11 OF 12

STRUCTURAL STEEL TO COMPLY W/ ASTM A6

TOLERANCE UNLESS OTHERWISE NOTED:
FRACTIONS = ± 1/16"
ANGLES = ± 1/2°
DIAMETERS = ± 1/32"

SPECIAL PROVISION, GRAS - CONCRETE COMBINATION BR.

ROUTE NO. T.H. 3 (CLASS 2), RURAL COLLECTOR, BRIDGE # 11
TOWN OF CLARENDON, RUTAND COUNTY, VT.

REV	NO.	DATE	DESCRIPTION	BY
	1	3/10/16	REVISED PER 2/23/16 MARK-UP	E.P.

REV	NO.	DATE	DESCRIPTION	BY

ELDERLEE, INC.
OAKS CORNERS, NEW YORK 14518
email: dlong@elderlee.com / epeek@elderlee.com
Tel: 315-789-6670 Fax: 315-789-6615

AISC CERTIFIED FABRICATOR

ORTHOGRAPHIC PROJECTION

DRAWN	E.P.	01/29/16
CHECKED	D.L.	
APPROVED	M.V.	
SCALE	SCHEMATIC	
DRAWING NO.	FRL - CLARENDON - T	

WW 3

(ITEM # 16)

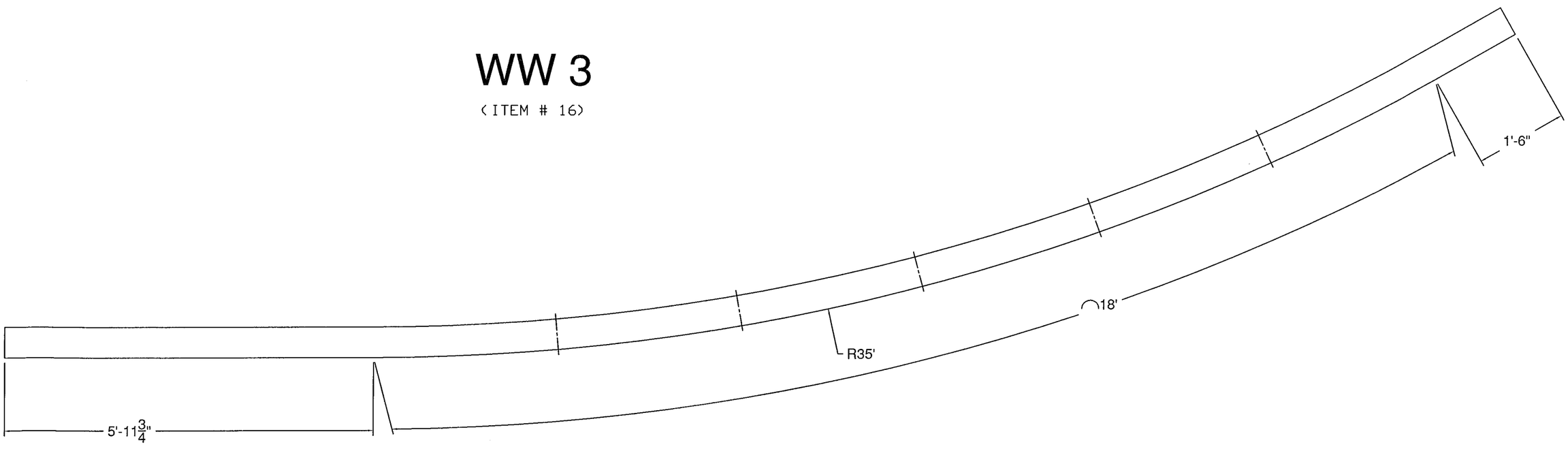

900.620 SPECIAL PROVISION (GUARDRAIL
ITEM #: APPROACH SECTION TO CONCRETE BRIDGE RAIL)

SHEET 12 OF 12

STRUCTURAL STEEL TO COMPLY W/ ASTM A6

TOLERANCE UNLESS OTHERWISE NOTED:
FRACTIONS = ± 1/16"
ANGLES = ± 1/2°
DIAMETERS = ± 1/32"

SPECIAL PROVISION, GRAS - CONCRETE COMBINATION BR.

ROUTE NO. T.H. 3 (CLASS 2), RURAL COLLECTOR, BRIDGE # 11
TOWN OF CLARENDON, RUTAND COUNTY, VT.

REV	NO.	DATE	DESCRIPTION	BY
	1	3/10/16	REVISED PER 2/23/16 MARK-UP	E.P.

REV	NO.	DATE	DESCRIPTION	BY

ELDERLEE, INC.
OAKS CORNERS, NEW YORK 14518
email: dlong@elderlee.com / epeek@elderlee.com
Tel: 315-789-6670 Fax: 315-789-6615

CERTIFIED FABRICATOR

ORTHOGRAPHIC PROJECTION

DRAWN	E.P.	01/29/16
CHECKED	D.L.	
APPROVED	M.V.	
SCALE	SCHEMATIC	
DRAWING NO.	FRL - CLARENDON - T	

WELDING PROCEDURE SPECIFICATION

PQR ELDERLEE #3

Material Specification	ASTM A500 TO A36
Welding Process	FCAW-G
Manual or Machine	SEMAUTOMATIC
Position of Welding	FLAT/HORIZONTAL
Filler Metal Specification	A5.29
Filler Metal Classification	E81T1-Ni1C-JH4
Flux	N/A
Shielding Gas	CO 2 Dew Point -40DEG F Flow Rate 50CFH
Single or Multiple Pass	SINGLE
Single or Multiple Arc	SINGLE
Welding Current	DC
Polarity	REVERSE ELECTRODE POSITIVE
Welding Progression	STRINGER
Root Treatment	PER D1.5
Preheat and Interpass Temperature	PER D1.5
Postheat Temperature	NONE
Heat Input	Min Max

WELDING PROCEDURE

Pass no.	Electrode size	Welding Current		Travel speed	Joint detail
		Amperes	Volts		
1	1/16	310	25	11	
Variable	LIMITS	341 TO 269	27 TO 23	12 TO 10	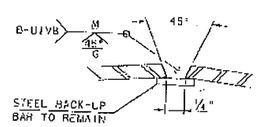 WELD DETAIL FOR SPLICE TUBE NOT TO SCALE

This procedure may vary due to fabrication sequence, fit-up, pass size, etc., within the limitation of variables given in Section 5.

Procedure No. 3900

Revision No.

Contractor Elderlee, Inc.

Authorized By RANDY SCOTT

Date 2/29/2016

WELDING PROCEDURE SPECIFICATION

PQR ELDERLEE #3

Material Specification	ASTM A500 TO A36
Welding Process	FCAW-G
Manual or Machine	SEMAUTOMATIC
Position of Welding	FLAT/HORIZONTAL
Filler Metal Specification	A5.29
Filler Metal Classification	E81T1-Ni1C-JH4
Flux	N/A
Shielding Gas	CO 2 Dew Point -40DEG F Flow Rate 50CFH
Single or Multiple Pass	SINGLE
Single or Multiple Arc	SINGLE
Welding Current	DC
Polarity	REVERSE ELECTRODE POSITIVE
Welding Progression	STRINGER
Root Treatment	PER D1.5
Preheat and Interpass Temperature	PER D1.5
Postheat Temperature	NONE
Heat Input	Min _____ Max _____

WELDING PROCEDURE

Pass no.	Electrode size	Welding Current Amperes	Welding Current Volts	Travel speed	Joint detail
1	1/16	310	25	11	
Variable	LIMITS	341 TO 269	27 TO 23	12 TO 10	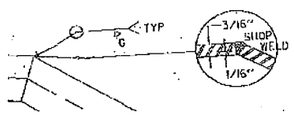

This procedure may vary due to fabrication sequence, fit-up, pass size, etc., within the limitation of variables given in Section 5.

Procedure No. 3901

Revision No. _____

Contractor Elderlee, Inc.

Authorized By RANDY SCOTT

Date 2/29/2016

WELDING PROCEDURE SPECIFICATION

PQR ELDERLEE #3

Material Specification	ASTM A500 TO A572
Welding Process	FCAW-G
Manual or Machine	SEMAUTOMATIC
Position of Welding	FLAT/HORIZONTAL
Filler Metal Specification	A5.29
Filler Metal Classification	E81T1-Ni1C-JH4
Flux	N/A
Shielding Gas	CO 2 Dew Point -40DEG F Flow Rate 50CFH
Single or Multiple Pass	SINGLE
Single or Multiple Arc	SINGLE
Welding Current	DC
Polarity	REVERSE ELECTRODE POSITIVE
Welding Progression	STRINGER
Root Treatment	PER D1.5
Preheat and Interpass Temperature	PER D1.5
Postheat Temperature	NONE
Heat Input	Min _____ Max _____

WELDING PROCEDURE

Pass no.	Electrode size	Welding Current Amperes	Welding Current Volts	Travel speed	Joint detail
1	1/16	310	25	11	
Variable	LIMITS	341 TO 269	27 TO 23	12 TO 10	

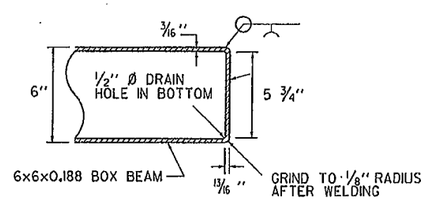

END COVER PLATE DETAIL

This procedure may vary due to fabrication sequence, fit-up, pass size, etc., within the limitation of variables given in Section 5.

Procedure No. 3902

Revision No. _____

Contractor Elderlee, Inc.

Authorized By RANDY SCOTT

Date 2/29/2016

WELDING PROCEDURE SPECIFICATION

Material Specification	A572 GR 50
Welding Process	GMAW
Manual or Machine	SEMIAUTOMATIC/ROBOTIC
Position of Welding	FLAT/HORIZONTAL
Filler Metal Specification	A5.18
Filler Metal Classification	L-56 LINCOLN
Flux	N/A
Shielding Gas	90% ARGON /10% CO2 Dew Point -40DEG F Flow Rate 45CFH
Single or Multiple Pass	SINGLE
Single or Multiple Arc	SINGLE
Welding Current	DC
Polarity	REVERSE
Welding Progression	STRINGER
Root Treatment	PER D1.5
Preheat and Interpass Temperature	PER D1.5
Postheat Temperature	NONE
Heat Input	Min _____ Max _____

WELDING PROCEDURE

Pass no.	Electrode size	Welding Current Amperes	Welding Current Volts	Travel speed	Joint detail
	.045	190	22	19	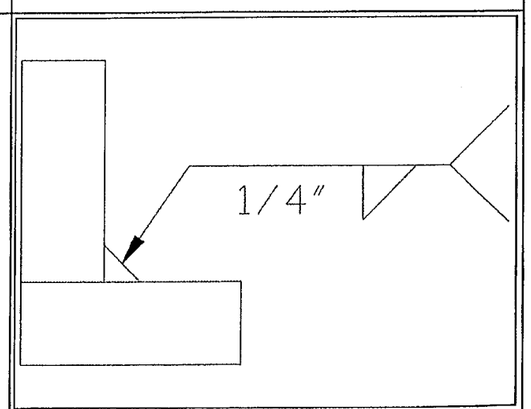
Variable	LIMITS	171 TO 209	20 TO 24	17 TO 21	

This procedure may vary due to fabrication sequence, fit-up, pass size, etc., within the limitation of variables given in Section 5.

Procedure No. 3022

Revision No. _____

Contractor Elderlee, Inc.

Authorized By RANDY SCOTT

Date 3/2/2016

WELDING PROCEDURE SPECIFICATION

PQR ELDERLEE #3

Material Specification	A500 TO A36
Welding Process	FCAW-G
Manual or Machine	SEMAUTOMATIC
Position of Welding	FLAT/HORIZONTAL
Filler Metal Specification	A5.29
Filler Metal Classification	E81T1-Ni1C-JH4
Flux	N/A
Shielding Gas	CO 2 Dew Point -40DEG F Flow Rate 50CFH
Single or Multiple Pass	SINGLE
Single or Multiple Arc	SINGLE
Welding Current	DC
Polarity	REVERSE
Welding Progression	STRINGER
Root Treatment	CLEAN PER D1.5
Preheat and Interpass Temperature	PER D1.5
Postheat Temperature	NONE
Heat Input	Min _____ Max _____

WELDING PROCEDURE

Pass no.	Electrode size	Welding Current Amperes	Welding Current Volts	Travel speed	Joint detail
	1/16	310	25	11	
Variable	LIMITS	341 TO 269	27 TO 23	12 TO 10	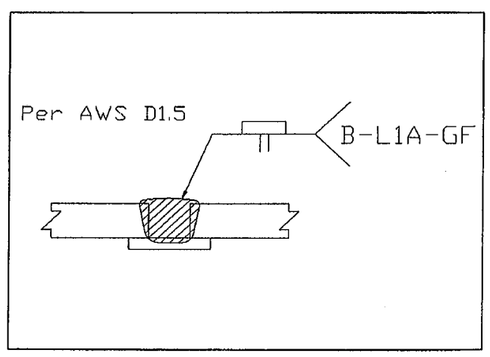

This procedure may vary due to fabrication sequence, fit-up, pass size, etc., within the limitation of variables given in Section 5.

Procedure No. 3026

Revision No. _____

Contractor Elderlee, Inc.

Authorized By RANDY SCOTT

Date 3/24/2014