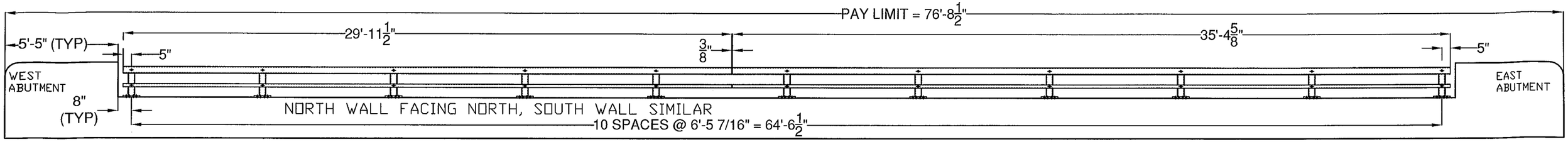

HARDWARE NOTES	
ITEM #	FUNCTION
13	BOLT BOTTOM RAIL TO POST (ITEM #1)
14	BOLT TOP RAIL TO POST (ITEM #1)
15	BOLT BOTTOM SPLICE BARS (ITEM #6) TO BOTTOM RAIL
16	BOLT TOP SPLICE BARS (ITEM #7) TO TOP RAIL

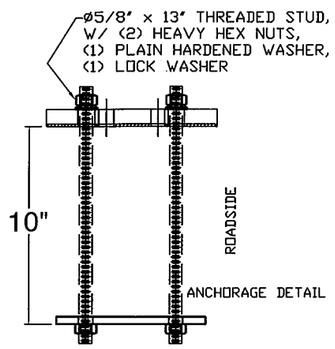

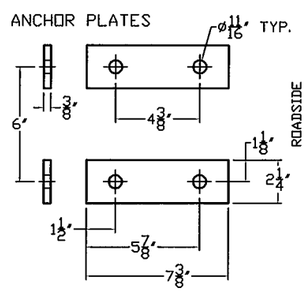

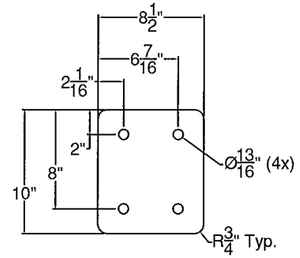

1/8" Elastomeric Pad

BILL OF MATERIAL				
ITEM #	QTY	PART #	DESCRIPTION	ASTM DESIGNATION
1	22	0033.90017	TWO RAIL POST & BASE PLATE ASSEMBLY	A572 Gr. 50, A500 Gr. B
2	2	TBD	4" X 3" X 1/4" RAIL @ 29'-11 1/2" W/ END PLATES	A500 Gr. B / A572 Gr. 50
3	2	TBD	4" X 3" X 1/4" RAIL @ 35'-4 5/8" W/ END PLATES	A500 Gr. B / A572 Gr. 50
4	2	TBD	2" X 2" X 1/8" RAIL @ 29'-11 1/2" W/ END PLATES	A500 Gr. B / A572 Gr. 50
5	2	TBD	2" X 2" X 1/8" RAIL @ 35'-4 5/8" W/ END PLATES	A500 Gr. B / A572 Gr. 50
6	2	0033.90069	1-1/2" X 1-1/2" FIX. SPL BAR @ 2' 4"	A572 Gr. 50
7	2	0033.90071	2-1/4" X 3-1/4" FIX. SPL. BAR @ 2' 4"	A572 Gr. 50
8	44	0033.00295	3/8" X 2 1/4" X 7 3/8" ANCHOR PLATES	A36
9	90*	0042.05813	ø 5/8" X 13" ANCHOR STUDS	A449
10	178*	0080.15901	ø 5/8" HEAVY HEX NUTS	A563
11	88	0080.15911	ø 5/8" FLAT WASHERS	F436
12	88	0080.15920	ø 5/8" LOCK WASHERS	ASME B18.21
13	22	0080.05565	ø 5/8" X 7 1/2" SLOTTED, ROUND HEAD BOLT, NUT, F.W., & L.W.	A449, A563, F436, & ASME B18.21
14	22	0080.06410	ø 3/4" X 8 1/2" SLOTTED, ROUND HEAD BOLT, NUT, F.W., & L.W.	A449, A563, F436, & ASME B18.21
15	8	0080.05275	ø 5/8" X 3" HEX BOLT, NUT, F.W., & L.W.	A325, A563, F436, & ASME B18.21
16	8	0080.07330	ø 7/8" X 5 1/2" HEX BOLT, NUT, F.W., & L.W.	A325, A563, F436, & ASME B18.21
17	22	0033.00053	1/8" ELASTOMERIC PAD	D2240
18	2	0054.900015	APPROACH, END WALL CONNECTORS	PER BOM
19	2	0054.900016	TRAILING, END WALL CONNECTORS	PER BOM
20	6		DELINEATORS (SUPPLIED BY F.R. LaFAYETTE)	ALUMINUM

*-2 EXTRA FOR VOAT TESTING

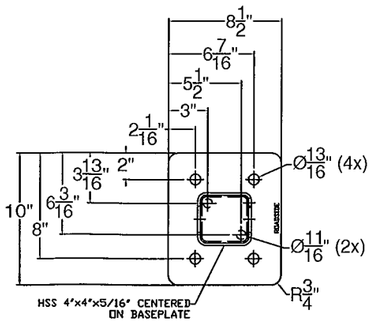

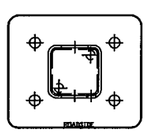

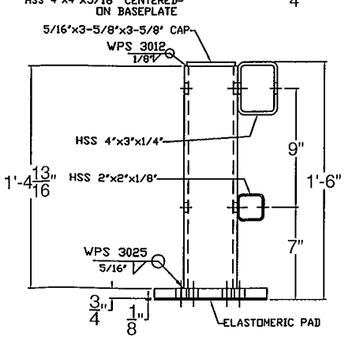

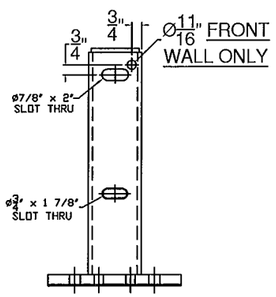

NOTES:

1. ALL WORK AND MATERIALS SHALL CONFORM TO SECTION 525.
2. PRIOR TO GALVANIZING THE ASSEMBLED POST, GRIND ALL EDGES TO A MINIMUM RADIUS OF 1/16".
3. ALL POSTS SHALL BE SET NORMAL TO GRADE.
4. SECTIONS OF RAIL TUBE SHALL BE ATTACHED TO A MINIMUM OF TWO BRIDGE POSTS AND PREFERABLY TO AT LEAST 4 POSTS.
5. HOLES IN RAILS FOR TUBE ATTACHMENT, WILL BE SHOP-DRILLED AND MAY BE FIELD DRILLED. HOLES SHALL BE COATED WITH AN APPROVED ZINC-RICH PAINT PRIOR TO INSTALLATION.
6. BOLTS SHALL BE TORQUED SNUG TIGHT (APPROXIMATELY 100 FT-LB).
7. RAIL TUBES SHALL BE ATTACHED USING FULL DIAMETER BODY ASTM A449 (TYPE I) ROUND HEAD BOLTS INSERTED THROUGH THE FACE OF THE TUBE.
8. SEE STANDARD DRAWING G-I FOR DETAILS OF DELINEATORS. A DELINEATOR SHALL BE INSTALLED AT 30 FOOT SPACING OR THE NEAREST POST. WHITE IS TO BE INSTALLED ON THE DRIVER'S RIGHT. FOR ONE WAY BRIDGES, YELLOW IS TO BE INSTALLED ON THE DRIVER'S LEFT. PAYMENT FOR DELINEATORS SHALL BE INCIDENTAL TO OTHER ITEMS.
9. AESTHETIC TREATMENT TYPE SHALL BE APPLIED AS SPECIFIED IN THE CONTRACT PLANS. IF NONE IS SPECIFIED IT SHALL NOT BE USED. AESTHETIC TREATMENT DETAILED ON THIS SHEET MAY ALSO BE APPLIED ON THE FASCIA SIDE OF THE RAIL, IF SPECIFIED IN THE CONTRACT PLANS.
10. BRIDGE RAILING SHALL HAVE A RUBBED FINISH IN ACCORDANCE WITH SECTION 501.
11. HOLES FOR MOUNTING DELINEATORS TO BE FIELD DRILLED. HOLES SHALL BE COATED WITH AN APPROVED ZINC-RICH PAINT PRIOR TO INSTALLATION.

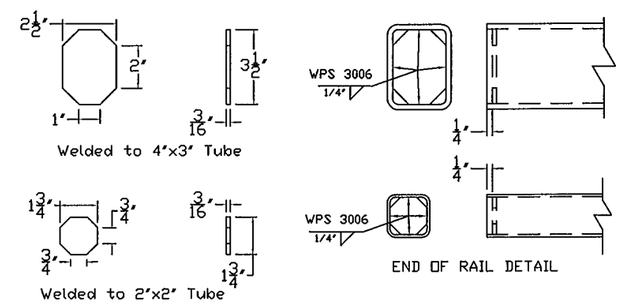

ITEM #: 525.45

SHEET 1 OF 3

STRUCTURAL STEEL TO COMPLY W/ ASTM A6

TOLERANCE UNLESS OTHERWISE NOTED:
FRACTIONS = ± 1/16"
ANGLES = ± 1/2°
DIAMETERS = ± 1/32"

ORTHOGRAPHIC PROJECTION

BRIDGE RAIL DETAILS SHEET

ROUTE NO. T.H. 3 (CLASS 2), RURAL COLLECTOR , BRIDGE # 11
TOWN OF CLARENDON, RUTAND COUNTY, VT.

R	NO.	DATE	DESCRIPTION	BY
E	1	2/11/16	REVISE PER 2/8/16 MARK-UP	E.P.
V	2	3/31/16	REVISE END WALL CONNECTORS (TIP DOWN)	E.P.

R	NO.	DATE	DESCRIPTION	BY
E				
V				

ELDERLEE, INC.
OAKS CORNERS, NEW YORK 14518
E-Mail: dlong@elderlee.com / epeek@elderlee.com
Tel: 315-789-6670 Fax: 315-789-6615

AISC CERTIFIED FABRICATOR

DRAWN	E.P.	1/20/16
CHECKED	D.L.	1/20/16
APPROVED	.	.
SCALE	SCHEMATIC	
DRAWING NO.	FRL - CLARENDON (48)	

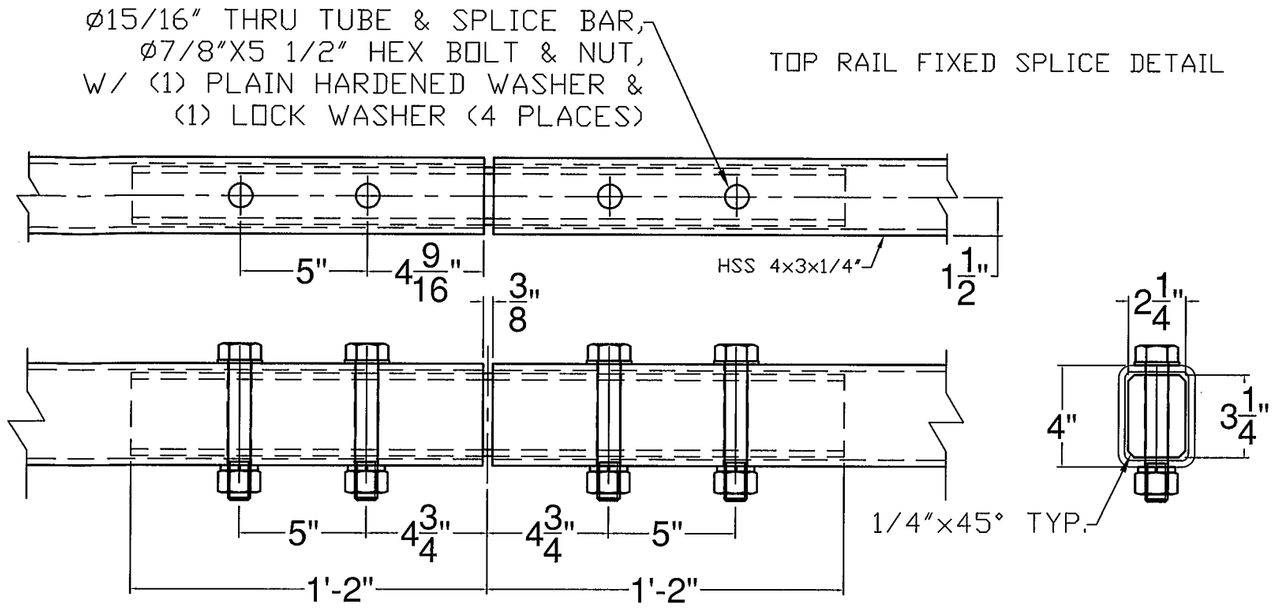

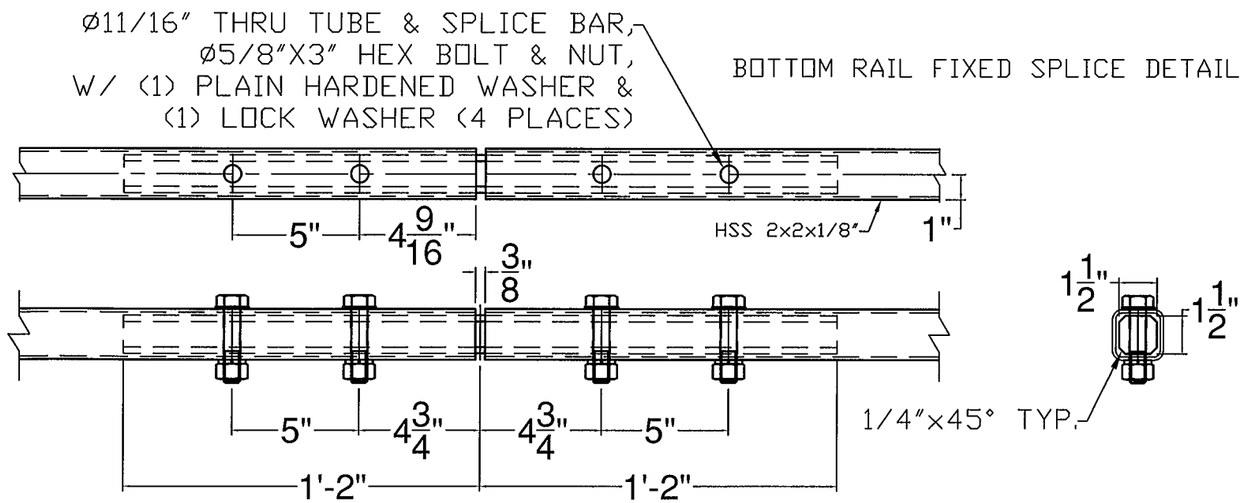

ITEM #: 525.45

SHEET 2 OF 3

STRUCTURAL STEEL TO COMPLY W/ ASTM A6

TOLERANCE UNLESS OTHERWISE NOTED:
FRACTIONS = ± 1/16"
ANGLES = ± 1/2°
DIAMETERS = ± 1/32"

ORTHOGRAPHIC PROJECTION

BRIDGE RAIL DETAILS SHEET

ROUTE NO. T.H. 3 (CLASS 2), RURAL COLLECTOR , BRIDGE # 11
TOWN OF CLARENDON, RUTAND COUNTY, VT.

R	NO.	DATE	DESCRIPTION	BY	R	NO.	DATE	DESCRIPTION	BY
E	1	2/11/16	REVISE PER 2/8/16 MARK-UP	E.P.	E				
V	2	3/31/16	REVISE END WALL CONNECTORS (TIP DOWN)	E.P.	V				

ELDERLEE, INC.
OAKS CORNERS, NEW YORK 14518
E-Mail: dlong@elderlee.com / epeek@elderlee.com
Tel: 315-789-6670 Fax: 315-789-6615

AISC CERTIFIED FABRICATOR

DRAWN	E.P.	1/20/16
CHECKED	D.L.	1/20/16
APPROVED	.	.
SCALE	SCHEMATIC	
DRAWING NO.	FRL - CLARENDON (48)	

BILL OF MATERIALS			
ITEM #	QTY	DESCRIPTION	ASTM #
1	1	DBL TUBE WALL PLATE - 1" X 12" x 25"	ASTM A572 Gr. 50
2	10	Ø3/4" X 10" STUD	TO BE PURCHASED
3	2	5" X 5" X 5/16" TUBE W/ SLOTS @ 18"	ASTM A500 Gr. B
4	2	SHIM PL 1/2" X 4" X 17" W/ SLOTS	ASTM A709 Gr. 36 CVN
5	2	SHIM PL 1/2" X 4" X 17" (W/O SLOTS)	ASTM A709 Gr. 36 CVN

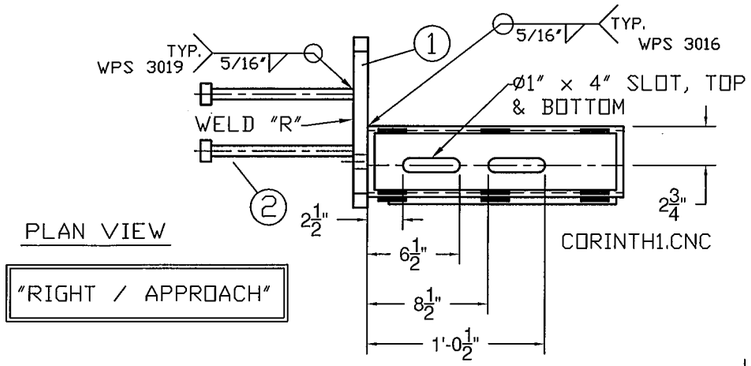

PROTRUSIONS CAUSED BY WELDING OR GALVANIZING ARE NOT PERMITTED ON THE SPLICE TUBES AND FILL PLATES

FR LAFAYETTE
CLAREDON (48)
P/N: 0054.900015
QTY: 2

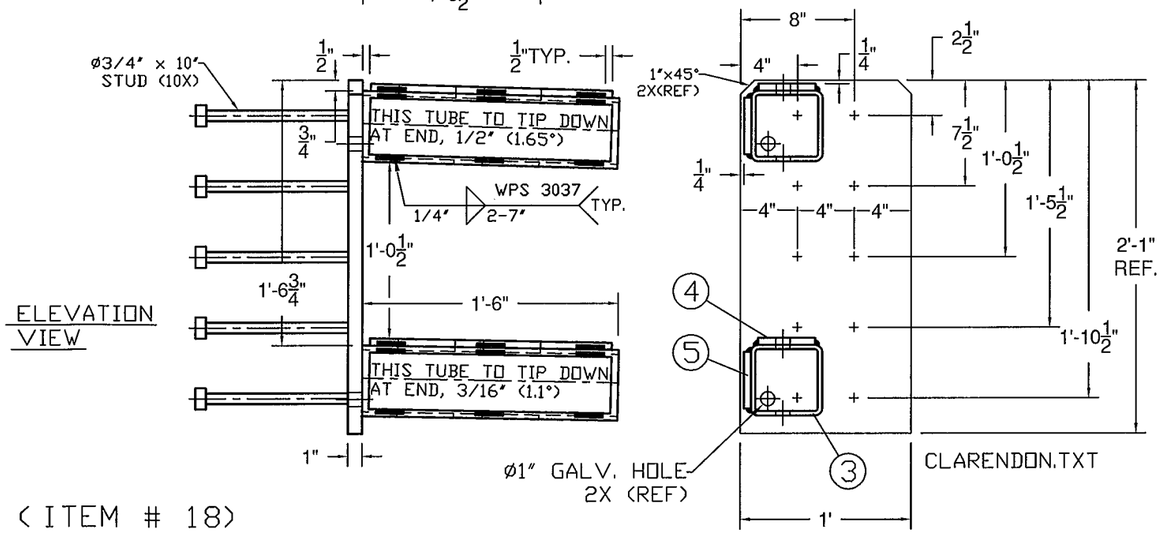

(ITEM # 18)

BILL OF MATERIALS			
ITEM #	QTY	DESCRIPTION	ASTM #
1	1	DBL TUBE WALL PLATE - 1" X 12" x 25"	ASTM A572 Gr. 50
2	10	Ø3/4" X 10" STUD	TO BE PURCHASED
3	2	5" X 5" X 5/16" TUBE W/ SLOTS @ 18"	ASTM A500 Gr. B
4	2	SHIM PL 1/2" X 4" X 17" W/ SLOTS	ASTM A709 Gr. 36 CVN
5	2	SHIM PL 1/2" X 4" X 17" (W/O SLOTS)	ASTM A709 Gr. 36 CVN

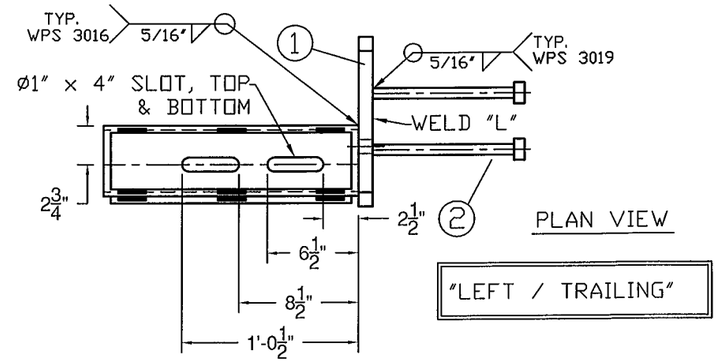

PROTRUSIONS CAUSED BY WELDING OR GALVANIZING ARE NOT PERMITTED ON THE SPLICE TUBES AND FILL PLATES

FR LAFAYETTE
CLAREDON (48)
P/N: 0054.900016
QTY: 2

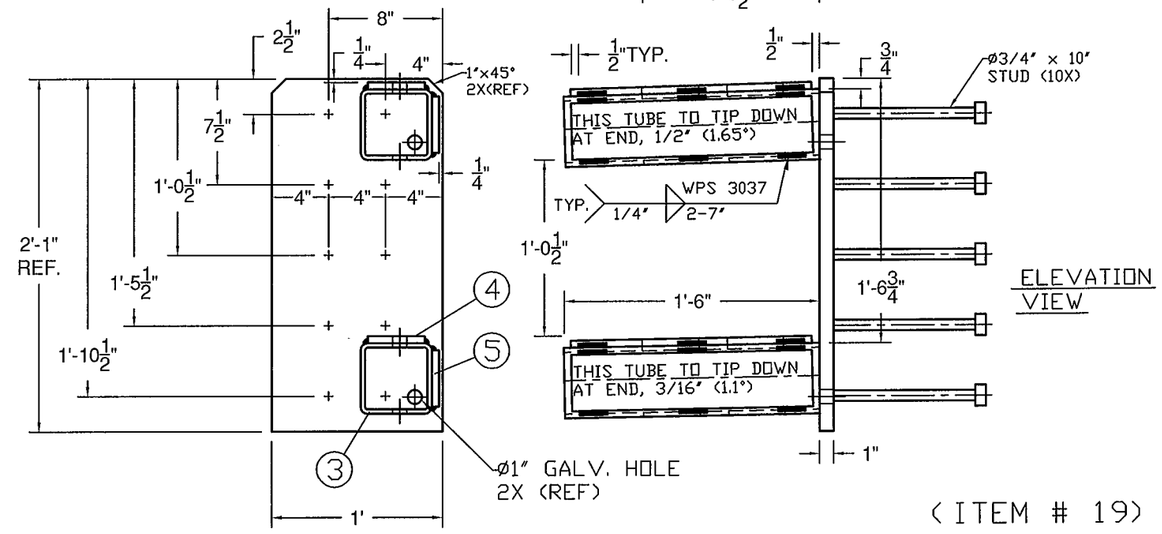

(ITEM # 19)

ITEM #: 525.45

SHEET 3 OF 3

STRUCTURAL STEEL TO COMPLY W/ ASTM A6

TOLERANCE UNLESS OTHERWISE NOTED:
FRACTIONS = ± 1/16"
ANGLES = ± 1/2°
DIAMETERS = ± 1/32"

ORTHOGRAPHIC PROJECTION

BRIDGE RAIL DETAILS SHEET

ROUTE NO. T.H. 3 (CLASS 2), RURAL COLLECTOR, BRIDGE # 11
TOWN OF CLARENDON, RUTAND COUNTY, VT.

REVISIONS	NO.	DATE	DESCRIPTION	BY	REVISIONS	NO.	DATE	DESCRIPTION	BY
	1	2/11/16	REVISE PER 2/8/16 MARK-UP	E.P.					
	2	3/31/16	REVISE END WALL CONNECTORS (TIP DOWN)	E.P.					

ELDERLEE, INC.
OAKS CORNERS, NEW YORK 14518
E-Mail: dlong@elderlee.com / epeek@elderlee.com
Tel: 315-789-6670 Fax: 315-789-6615

AISC CERTIFIED FABRICATOR

DRAWN	E.P.	1/20/16
CHECKED	D.L.	1/20/16
APPROVED	.	.
SCALE	SCHEMATIC	
DRAWING NO.	FRL - CLARENDON (48)	

WELDING PROCEDURE SPECIFICATION

PQR ELDERLEE #3

Material Specification	A572 GR. 50 /A500 GR. B
Welding Process	FCAW-G
Manual or Machine	SEMAUTOMATIC
Position of Welding	FLAT / HORIZONTAL
Filler Metal Specification	A5.29
Filler Metal Classification	E81T1-Ni1C-JH4
Flux	N/A
Shielding Gas	CO 2 Dew Point -40DEG F Flow Rate 50CFH
Single or Multiple Pass	SINGLE
Single or Multiple Arc	SINGLE
Welding Current	DC
Polarity	REVERSE ELECTRODE POSITIVE
Welding Progression	STRINGER
Root Treatment	PER D1.5
Preheat and Interpass Temperature	PER D1.5
Postheat Temperature	NONE
Heat Input	Min Max

WELDING PROCEDURE

Pass no.	Electrode size	Welding Current		Travel speed	Joint detail
		Amperes	Volts		
1	1/16	310	25	11	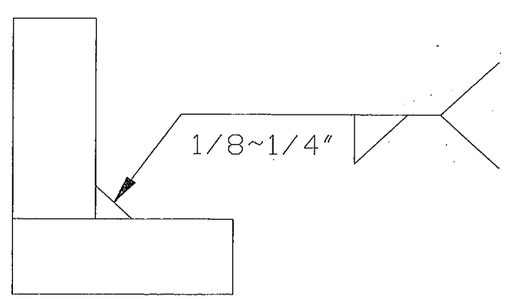
Variable	LIMITS	341 TO 279	27 TO 23	12 TO 10	

This procedure may vary due to fabrication sequence, fit-up, pass size, etc., within the limitation of variables given in Section 5.

Procedure No. 3006

Revision No.

Contractor Elderlee, Inc.

Authorized By RANDY SCOTT

Date 3/31/2016

Form III-2

WELDING PROCEDURE SPECIFICATION

PQR ELDERLEE #3

Material Specification	A572 GR. 50/ A500 GR. B
Welding Process	FCAW-G
Manual or Machine	SEMAUTOMATIC
Position of Welding	FLAT/HORIZONTAL
Filler Metal Specification	A5.29
Filler Metal Classification	E81T1-Ni1C-JH4
Flux	N/A
Shielding Gas	CO 2 Dew Point -40DEG F FLOW RATE 50 CFH
Single or Multiple Pass	SINGLE
Single or Multiple Arc	SINGLE
Welding Current	DC
Polarity	REVERSE ELECTRODE POSITIVE
Welding Progression	STRINGER
Root Treatment	PER D1.5
Preheat and Interpass Temperature	PER. D1.5
Postheat Temperature	NONE
Heat Input	Min Max

Vermont Agency of Transportation
RECEIVED
CK'D BY OK'D BY RF
February 11, 2016
RESUBMIT NO Approved
BY KH DATE 02/16/2016

WELDING PROCEDURE

Pass no.	Electrode size	Welding Current Amperes	Welding Current Volts	Travel speed	Joint detail
1	1/16	310	25	11	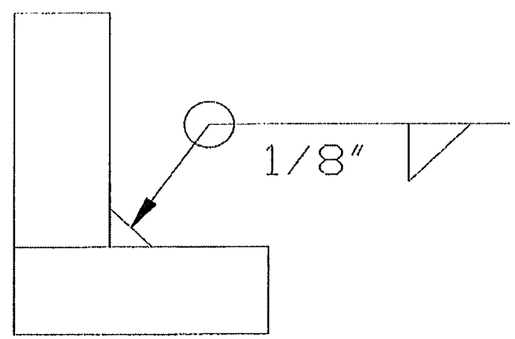
Variable 1	LIMITS	341 TO 269	27 TO 23	12 TO 10	

This procedure may vary due to fabrication sequence, fit-up, pass size, etc., within the limitation of variables given in Section 5.

Procedure No. 3012
Revision No.

Contractor Elderlee, Inc.
Authorized By RANDY SCOTT
Date 2/11/2016

WELDING PROCEDURE SPECIFICATION

PQR ELDERLEE #3

Material Specification	ASTM A572 GR. 50 / ASTM A500 GR. B
Welding Process	FCAW-G
Manual or Machine	SEMAUTOMATIC
Position of Welding	FLAT/HORIZONTAL
Filler Metal Specification	A5.29
Filler Metal Classification	E81T1-Ni1C-JH4
Flux	N/A
Shielding Gas	CO 2 Dew Point -40DEG F Flow Rate 50CFH
Single or Multiple Pass	SINGLE
Single or Multiple Arc	SINGLE
Welding Current	DC
Polarity	REVERSE
Welding Progression	STRINGER
Root Treatment	PER D1.5
Preheat and Interpass Temperature	PER D1.5
Postheat Temperature	NONE
Heat Input	Min _____ Max _____

Vermont Agency of Transportation
RECEIVED
CK'D BY _____ OK'D BY RF
February 11, 2016
RESUBMIT NO Approved
BY KH DATE 02/16/2016

WELDING PROCEDURE

Pass no.	Electrode size	Welding Current Amperes	Welding Current Volts	Travel speed	Joint detail
1	1/16	310	25	11	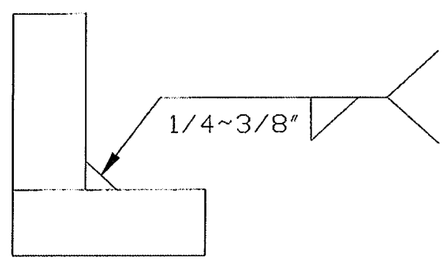
Variable	LIMITS	341 TO 269	27 TO 23	12 TO 10	

This procedure may vary due to fabrication sequence, fit-up, pass size, etc., within the limitation of variables given in Section 5.

Procedure No. 3016

Revision No. _____

Contractor Elderlee, Inc.

Authorized By RANDY SCOTT

Date 2/11/2016

WELDING PROCEDURE SPECIFICATION

PQR ELDERLEE #3

Material Specification	ASTM A572 GR. 50 /ASTM A108
Welding Process	FCAW-G
Manual or Machine	SEMAUTOMATIC
Position of Welding	FLAT/HORIZONTAL
Filler Metal Specification	A5.29
Filler Metal Classification	E81T1-Ni1C-JH4
Flux	N/A
Shielding Gas	CO 2 Dew Point -40DEG F Flow Rate 50CFH
Single or Multiple Pass	SINGLE
Single or Multiple Arc	SINGLE
Welding Current	DC
Polarity	REVERSE ELECTRODE POSITIVE
Welding Progression	STRINGER
Root Treatment	CLEAN PER D1.5
Preheat and Interpass Temperature	PER D1.5
Postheat Temperature	NONE
Heat Input	Min _____ Max _____

Vermont Agency of Transportation
RECEIVED
CK'D BY ____ OK'D BY RF
February 11, 2016
RESUBMIT NO Approved
BY KH DATE 02/16/2016

WELDING PROCEDURE

Pass no.	Electrode size	Welding Current Amperes	Welding Current Volts	Travel speed	Joint detail
1	1/16	310	25	11	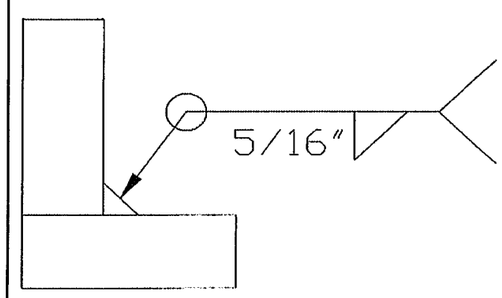
Variable	LIMITS	341 TO 269	27 TO 23	12 TO 10	

This procedure may vary due to fabrication sequence, fit-up, pass size, etc., within the limitation of variables given in Section 5.

Procedure No. 3019

Revision No. _____

Contractor Elderlee, Inc.

Authorized By RANDY SCOTT

Date 2/11/2016

WELDING PROCEDURE SPECIFICATION

PQR ELDERLEE #3

Material Specification	A572 GR. 50 / A500 GR. B
Welding Process	FCAW-G
Manual or Machine	SEMAUTOMATIC
Position of Welding	FLAT/HORIZONTAL
Filler Metal Specification	A5.29
Filler Metal Classification	E81T1-Ni1C-JH4
Flux	N/A
Shielding Gas	CO 2 Dew Point -40DEG F Flow Rate 50CFH
Single or Multiple Pass	SINGLE
Single or Multiple Arc	SINGLE
Welding Current	DC ELECTRODE POSITIVE
Polarity	REVERSE
Welding Progression	STRINGER
Root Treatment	PER D1.5
Preheat and Interpass Temperature	PER D1.5
Postheat Temperature	NONE
Heat Input	Min _____ Max _____

Vermont Agency of Transportation
RECEIVED
CK'D BY _____ OK'D BY RF
February 11, 2016
RESUBMIT NO Approved
BY KH DATE 02/16/2016

WELDING PROCEDURE

Pass no.	Electrode size	Welding Current Amperes	Welding Current Volts	Travel speed	Joint detail
1	1/16	310	25	11	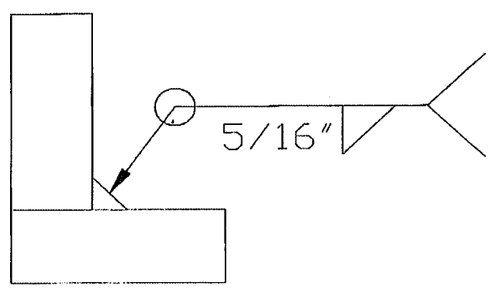
Variable	LIMITS	341 TO 269	27 TO 23	12 TO 10	

This procedure may vary due to fabrication sequence, fit-up, pass size, etc., within the limitation of variables given in Section 5.

Procedure No. 3025

Revision No. _____

Contractor Elderlee, Inc.

Authorized By RANDY SCOTT

Date 2/11/2016

WELDING PROCEDURE SPECIFICATION

PQR ELDERLEE #3

Material Specification	ASTM A500 GR. B / ASTM A709 GR. 36 CVN
Welding Process	FCAW-G
Manual or Machine	SEMAUTOMATIC
Position of Welding	FLAT/HORIZONTAL
Filler Metal Specification	A5.29
Filler Metal Classification	E81T1-Ni1C-JH4
Flux	N/A
Shielding Gas	CO 2 Dew Point -40DEG F Flow Rate 50CFH
Single or Multiple Pass	SINGLE
Single or Multiple Arc	SINGLE
Welding Current	DC
Polarity	REVERSE ELECTRODE POSITIVE
Welding Progression	STRINGER
Root Treatment	PER D1.5
Preheat and Interpass Temperature	PER D1.5
Postheat Temperature	NONE
Heat Input	Min _____ Max _____

Vermont Agency of Transportation
RECEIVED
CK'D BY ____ OK'D BY RF
February 11, 2016
RESUBMIT NO Approved
BY KH DATE 02/16/2016

WELDING PROCEDURE

Pass no.	Electrode size	Welding Current Amperes	Welding Current Volts	Travel speed	Joint detail
1	1/16	310	25	11	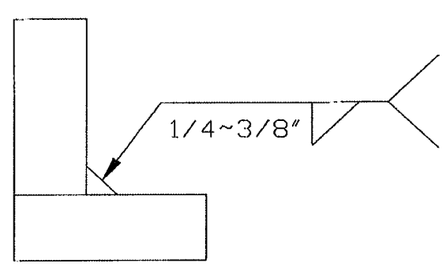
Variable	LIMITS	341 TO 269	27 TO 23	12 TO 10	

This procedure may vary due to fabrication sequence, fit-up, pass size, etc., within the limitation of variables given in Section 5.

Procedure No. 3037

Revision No. _____

Contractor Elderlee, Inc.

Authorized By RANDY SCOTT

Date 12/1/2014