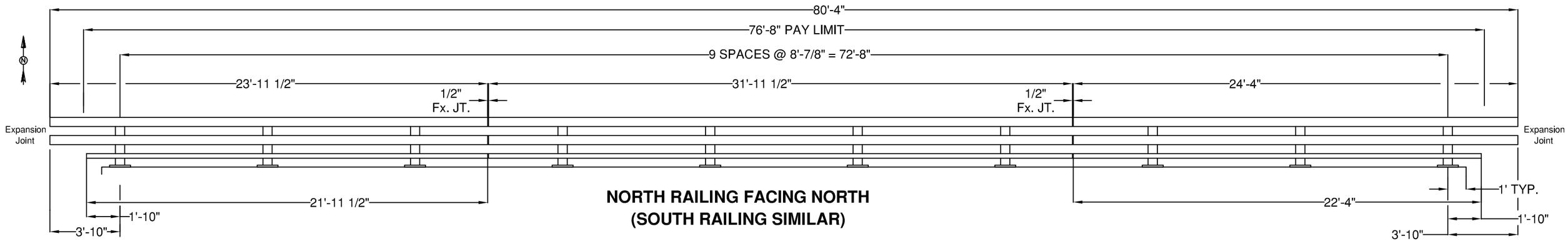

NORTH RAILING FACING NORTH
(SOUTH RAILING SIMILAR)

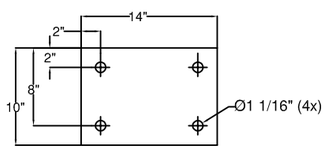

1/8" FABRIC PAD

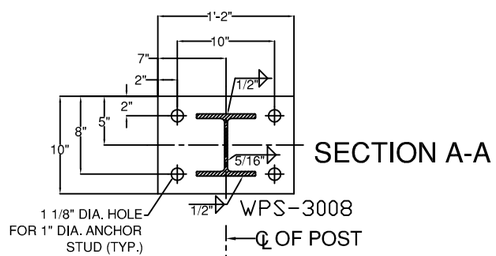

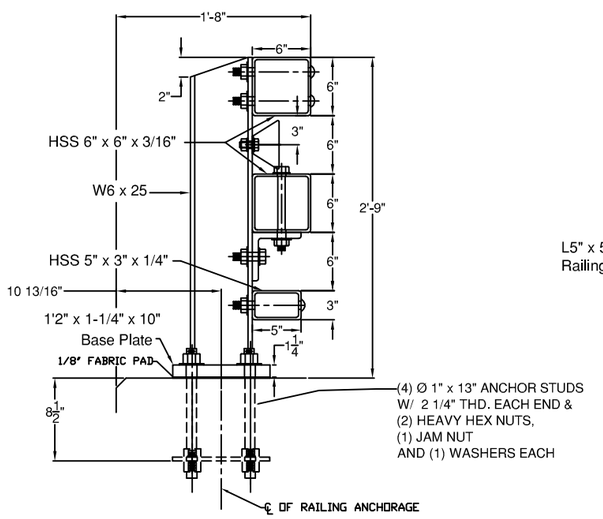

SECTION

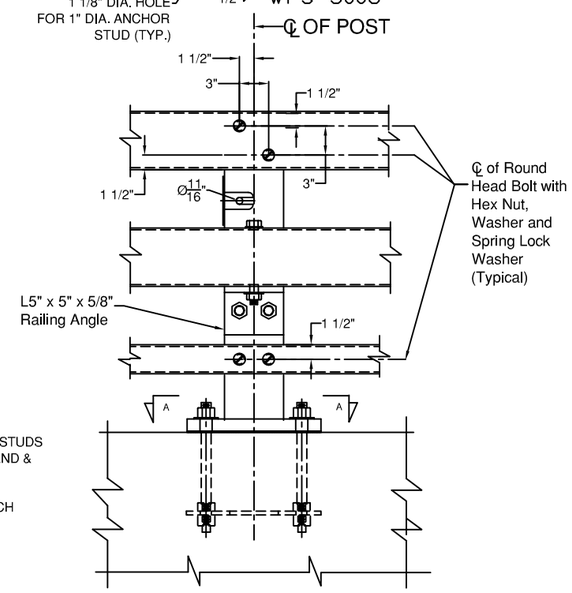

ELEVATION

STEEL BRIDGE RAILING

Vermont Agency of Transportation
RECEIVED
FR LaFayette-BRIGHTON Submittal 2-14-2013.pdf

CK'D BY R. Klinefelter OK'D BY J. Salvatori

February 14, 2013

RESUBMIT _____ Approved X

BY K. Higgins DATE 02/19/13

BILL OF MATERIAL		
QTY	DESCRIPTION	ASTM DESIGNATION
20	W6x25, THREE RAIL POST @ 2'-9" OA ON 1 1/4x10x1'-2" B.P.	A572 Gr. 50
2	HSS 3" X 5" X 1/4" RAIL @ 21'-11 1/2"	A500 Gr. B
2	HSS 3" X 5" X 1/4" RAIL @ 31'-11 1/2"	A500 Gr. B
2	HSS 3" X 5" X 1/4" RAIL @ 22'-4"	A500 Gr. B
4	HSS 6" X 6" X 3/16" RAIL @ 23'-11 1/2"	A500 Gr. B
4	HSS 6" X 6" X 3/16" RAIL @ 31'-11 1/2"	A500 Gr. B
4	HSS 6" X 6" X 3/16" RAIL @ 24'-4"	A500 Gr. B
4	2-1/8" X 4-1/4" FIX. SPLICE BAR @ 2'-3"	A572 Gr. 50
8	HSS 5" X 5" X 5/16" FIX. SPLICE TUBE @ 2'-3"	A500 Gr. B, A572 Gr. 50
20	3/8" X 10" X 14" ANCHOR PLATES (END POST)	A572 Gr. 50
20	1/8" X 10" X 14" FABRIC PAD	AASHTO M251
80	Ø 1" X 13" ANCHOR STUDS, W/ 2 1/4" THD. EACH END	A449 Gr. 1, CLASS 8.8
160	Ø 1" HEAVY HEX NUTS & FLAT WASHERS	A563 & F436
80	Ø 1" HEX JAM NUTS	A563
80	Ø 7/8" X 8" ROUND HEAD BOLT, NUT, SQ. WASHER, L.W.	A449, A563, F436, ASME B18.21.1
20	Ø 3/4" X 8" HEX BOLT, NUT, (2) F.W., & L.W.	A325, A563, F436, & ASME B18.21.1
40	Ø 3/4" X 2-3/4" HEX BOLT, NUT, (2) F.W., & L.W.	A325, A563, F436, & ASME B18.21.1
32	Ø 3/4" X 7-1/2" HEX BOLT, NUT, & (2) F.W.	A325, A563, & F436
16	Ø 3/4" X 4-1/2" HEX BOLT, NUT, & (2) F.W.	A325, A563, & F436
20	Ø 5/8" X 1-1/2" HEX BOLT, NUT, & (2) F.W.	A325, A563, & F436
20	L5" X 5" X 5/8" RAILING ANGLE @ 6'	A572 Gr. 50
TBD	DELINEATORS	(SUPPLIED BY F.R. LAFAYETTE)

GENERAL NOTES:

1) ALL RAILING IS TO BE FABRICATED AND ERECTED ACCORDING TO SECTION 525 OF THE STANDARD SPECIFICATIONS.
2) PRIOR TO GALVANIZING THE ASSEMBLED POST, GRIND ALL EDGES TO A MINIMUM RADIUS OF 1/16".
3) BOLTS SHALL BE TORQUED SNUG TIGHT (APPROXIMATELY 100 FT-LB).
4) RAIL TUBE EXPANSION JOINTS SHALL BE PROVIDED IN ANY RAIL BAY SPANNING THE END OF AN INTEGRAL ABUTMENT BRIDGE AND AT ALL SUPER STRUCTURE EXPANSION JOINTS. EXPANSION JOINT WIDTH SHALL BE 4"@ 68°F AND WILL BE ADJUSTED IN THE FIELD BY THE ENGINEER FOR OTHER TEMPERATURES.
5) RETROREFLECTIVE MATERIAL SHALL MEET THE REQUIREMENTS OF SUBSECTION 750.08 AND SHALL BE A .063" ALUMINUM BACKING WHITE OR YELLOW REFLECTOR. WHITE IS TO BE INSTALLED ON THE DRIVERS RIGHT. FOR ONE WAY BRIDGES , YELLOW IS TO BE INSTALLED ON THE DRIVERS LEFT.
6) PROTRUSIONS CAUSED BY WELDING OR GALVANIZING ARE NOT PERMITTED ON THE ADJOINING SURFACES OF THE BOX BEAM RAILS, SPLICE TUBES AND FILL PLATES.
7) THE MINIMUM DISTANCE FROM THE POST TO AN EXPANSION JOINT SHALL BE DETERMINED BY THE MINIMUM EDGE DISTANCE OF 5" FROM ANY ANCHOR STUD TO THE END OF THE SLAB, OR THE EXPANSION JOINT RECESS POUR, IF ONE IS USED.
8) ALL POST SHALL BE SET NORMAL TO GRADE. THE MAXIMUM CENTER TO CENTER SPACING OF BRIDGE RAIL POST IS 8' 3".
9) ANY BENDING OF RAIL SHALL BE DONE AT THE FABRICATION PLANT ACCORDING TO A PROCEDURE PROVIDED BY THE FABRICATOR.
10) STD. SPLICE HOLES ONLY IN BRIDGE RAIL TUBES. REST TO BE DRILLED BY CUSTOMER. FIELD DRILLED HOLES TO BE COATED WITH AN APPROVED ZINC-RICH PAINT PRIOR TO INSTALLATION.
11) THIS RAILING MEETS THE REQUIREMENTS FOR A TL-4 SERVICE LEVEL.

RAIL BENDING PROCEDURE:
RADII GREATER THAN 16' TO BE CURVED ON A TUBE BENDING MACHINE, RADII LESS THAN 16' TO BE 'PIE CUT' AND WELDED.

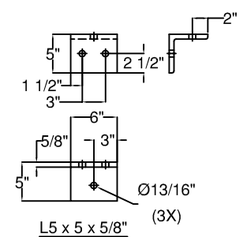

L5 x 5 x 5/8" RAILING ANGLE

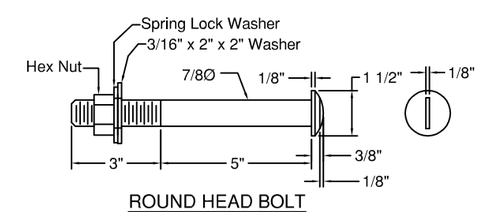

ROUND HEAD BOLT

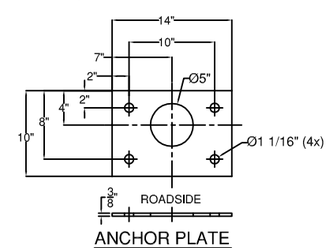

ANCHOR PLATE

ITEM #: 525.335

F.R. LAFAYETTE, P.O. 27399

SHEET 1 OF 2

APPROVED BY:

BRIDGE RAIL DETAILS SHEET

PROJECT: BRIGHTON, PROJECT # ER STP 034-3(25), MINOR ARTERIAL, BRIDGE # 84
TOWN OF BRIGHTON, ESSEX COUNTY, VT.

R	NO.	DATE	DESCRIPTION	BY	R	NO.	DATE	DESCRIPTION	BY
E	1	12/26/12	REVISED PER 12/26/12 EMAIL	E.P.	E	3	1/30/13	HOLE IN BP TO 1 1/8" PER K.M.H. 1/28/13	E.P.
V	2	1/9/13	REVISED PER 1/9/13 EMAIL	E.P.	V				

ELDERLEE, INC.
OAKS CORNERS, NEW YORK 14518
E-Mail: dlong@elderlee.com
Tel: 315-789-6670 Fax: 315-789-6615

AISC CERTIFIED FABRICATOR

DRAWN	E.P.	12/03/12
CHECKED	D.L.	12/03/12
APPROVED	.	.
SCALE	SCHEMATIC	
DRAWING NO.	F.R. LAFAYETTE BRIGHTON	

SPLICE BAR - FIXED

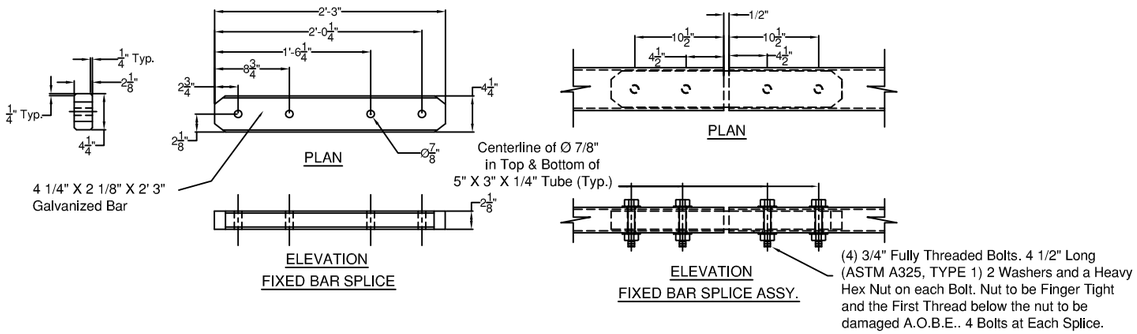

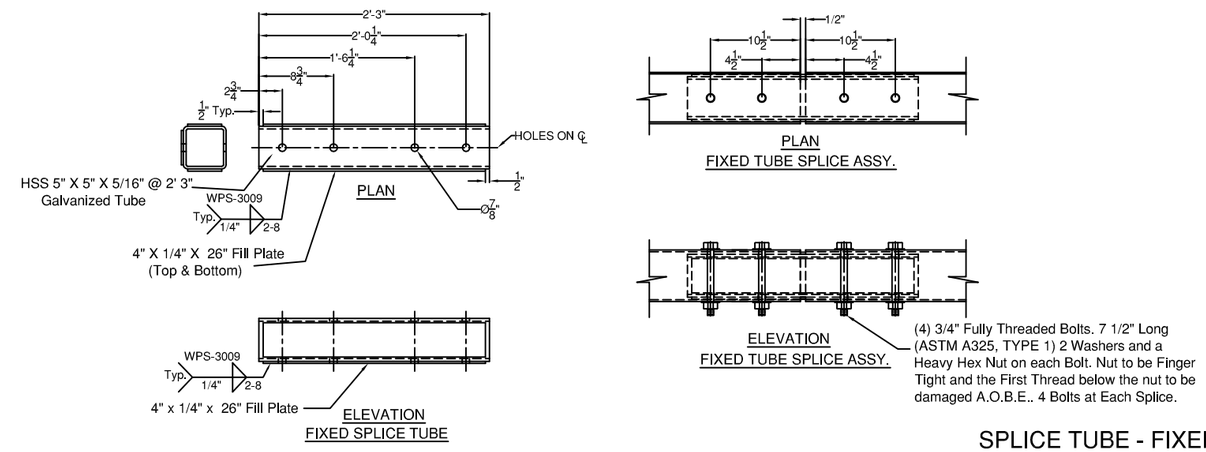

SPLICE TUBE - FIXED

BRIDGE POST DETAIL

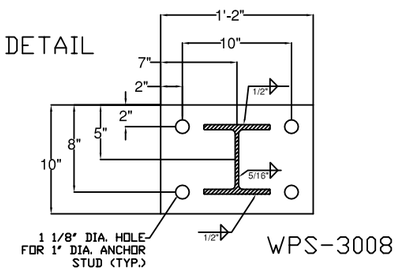

WPS-3008

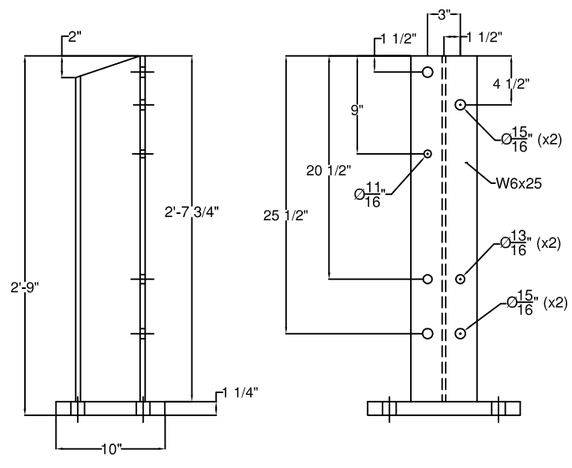

ITEM #: 525.335

F.R. LAFAYETTE, P.O. 27399

SHEET 2 OF 2

Vermont Agency of Transportation

RECEIVED

FR LaFayette-BRIGHTON Submittal 2-14-2013.pdf

CK'D BY R. Klinefelter OK'D BY J. Salvatori

February 14, 2013

RESUBMIT _____ Approved X

BY K. Higgins DATE 02/19/13

BRIDGE RAIL DETAILS SHEET

PROJECT: BRIGHTON, PROJECT # ER STP 034-3(25), MINOR ARTERIAL, BRIDGE # 84

TOWN OF BRIGHTON, ESSEX COUNTY, VT.

R	NO.	DATE	DESCRIPTION	BY	R	NO.	DATE	DESCRIPTION	BY
E	1	12/26/12	REVISED PER 12/26/12 EMAIL	E.P.	E	3	1/30/13	HOLE IN BP TO 1 1/8" PER K.M.H. 1/28/13	E.P.
V	2	1/9/13	REVISED PER 1/9/13 EMAIL	E.P.	V				

ELDERLEE, INC.
OAKS CORNERS, NEW YORK 14518
E-Mail: dlong@elderlee.com
Tel: 315-789-6670 Fax: 315-789-6615

AISC CERTIFIED FABRICATOR

DRAWN	E.P.	12/03/12
CHECKED	D.L.	12/03/12
APPROVED	.	.
SCALE	SCHEMATIC	
DRAWING NO.	F.R. LAFAYETTE BRIGHTON	

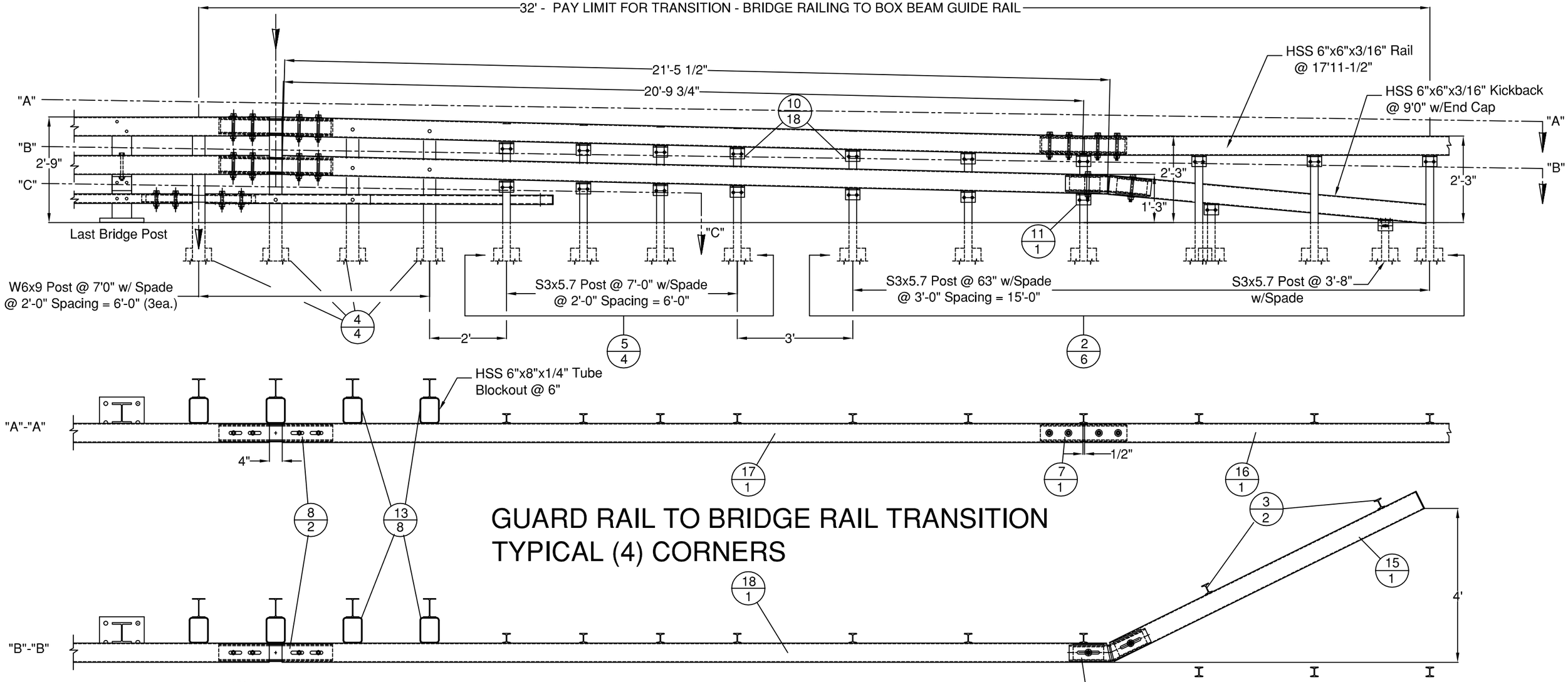

GUARD RAIL TO BRIDGE RAIL TRANSITION
TYPICAL (4) CORNERS

BILL OF MATERIALS, EACH OF (4) CORNERS			
ITEM #	QTY.	DESCRIPTION	MATERIAL (ASTM)
2	6	3" I-POST, PUNCH 8", & 20" W/SPD @ 63" LG	A572 Gr. 50
3	2	3" I-END POST W/SPD @ 3'-8" LG	A572 Gr. 50
4	4	W6X9 POST @ 7' W/SPD & 5/8" HOLES	A572 Gr. 50
5	4	3" I-POST, PUNCH 8" & 20", W/8X32" SPADE @7'	A572 Gr. 50
6	1	HSS 3X5" BTM TRANS RAIL W/5'-0" KB, EXP END	A500 Gr. B
7	1	HSS 5X5 TUBE SPLICE @27" LG W/ 1/4" SHIMS	A500 Gr. B / A572 Gr 50
8	2	HSS 5x5 EXP TUBE SPLICE @ 36" LG W/ 1/4" SHIMS	A500 Gr. B / A572 Gr 50
9	1	BR EXP BAR SPLICE 2-1/8" X 4-1/4" @ 36" LG	A572 Gr. 50
10	18	REG BB SHELF ANGLES @ 4-1/2"	A572 Gr. 50
11	1	DWY BB SHELF ANGLES @ 4-1/2"	A572 Gr. 50
12	1	HSS 5X5 DBL BEND TUBE SPL @ 28" LG	A500 Gr. B / A572 Gr 50
13	8	HSS 6X8" TRANS. TUBE B/O @ 6" LG	A500 Gr. B
14	3	HSS 6X8" TRANS. TUBE B/O @ 3" LG	A500 Gr. B
15	1	HSS 6X6" BB @ 9'-0" KICKBACK, W/ CAP	A500 Gr. B / A36
16	0.5	HSS 6X6" BB @ 17'-11 1/2", DRILL 3" CC	A500 Gr. B
17	1	HSS 6X6" BB TOP TRANS @ 20'-9 3/4" LG W/EXP END	A500 Gr. B
18	1	HSS 6X6" BB BTM TRANS @ 21'-5 1/2" LG W/EXP END	A500 Gr. B
19	18	3/8" X 7 1/2" BOLT, NUT, & 2 FW	A307, A563, F436
20	19	1/2" x 1-1/2" BOLT, NUT, & FW	A307, A563, F436
21	22	1/2" x 1-1/2" BOLT, NUT, 2 FW & LW	A307, A563, F436
22	4	3/4" X 4-1/2" BOLT, NUT, 2 FW	A325, A563, F436
23	12	3/4" X 7-1/2" BOLT, NUT, 2 FW	A325, A563, F436
24	6	3/4" X 8" CARR BOLT, NUT, FW & LW	A307, A563, F436
25	2	3/4" X 8" BOLT, NUT, 2 FW, & LW	A325, A563, F436

7/8" BOLT

HARDWARE NOTES	
ITEM #	FUNCTION
19	BOLT RAIL TO SHELF ANGLE (ITEM #10)
20	BOLT SHELF ANGLE (ITEM #'S 10 & 11) TO POST
21	BOLT BLOCK-OUTS (ITEM #'S 13 & 14) TO HEAVY POST
22	(4) PER SPLICE BAR (ITEM #9)
23	(4) PER SPLICE TUBING (ITEM #'S 7 & 8)
24	BOLT RAIL (ITEMS #'S 6,17, & 18 TO BLOCK-OUTS (ITEM #'S 13 & 14) [WHERE FASTENED]
25	BOLT DOUBLE BEND SPLICE TUBE (ITEM #12) TO RAIL (ITEM #18) & KICKBACK (ITEM #15) & ITEM #11)

Vermont Agency of Transportation
RECEIVED
FR LaFayette-BRIGHTON Submittal 2-14-2013.pdf
CK'D BY R. Klinefelter OK'D BY J. Salvatori
February 14, 2013
RESUBMIT Approved AS NOTED
BY K. Higgins DATE 02/19/13

ITEM #: 525.335

F.R. LAFAYETTE, P.O. 27399

SHEET 1 OF 4

APPROVED BY:

GUARD RAIL TO BRIDGE RAIL TRANSITION DETAILS SHEET

PROJECT: BRIGHTON, PROJECT # ER STP 034-3(25), MINOR ARTERIAL, BRIDGE # 84
TOWN OF BRIGHTON, ESSEX COUNTY, VT.

R	NO.	DATE	DESCRIPTION	BY	R	NO.	DATE	DESCRIPTION	BY
E	1	12/26/12	REVISED PER 12/26/12 EMAIL	E.P.	E				
V	2	1/9/13	REVISED PER 1/9/13 EMAIL	E.P.	V				

ELDERLEE, INC.
OAKS CORNERS, NEW YORK 14518
E-Mail: dlong@elderlee.com
Tel: 315-789-6670 Fax: 315-789-6615

AISC CERTIFIED FABRICATOR

DRAWN	E.P.	12/03/12
CHECKED	D.L.	12/03/12
APPROVED	.	.
SCALE	SCHEMATIC	
DRAWING NO.	F.R. LAFAYETTE BRIGHTON	

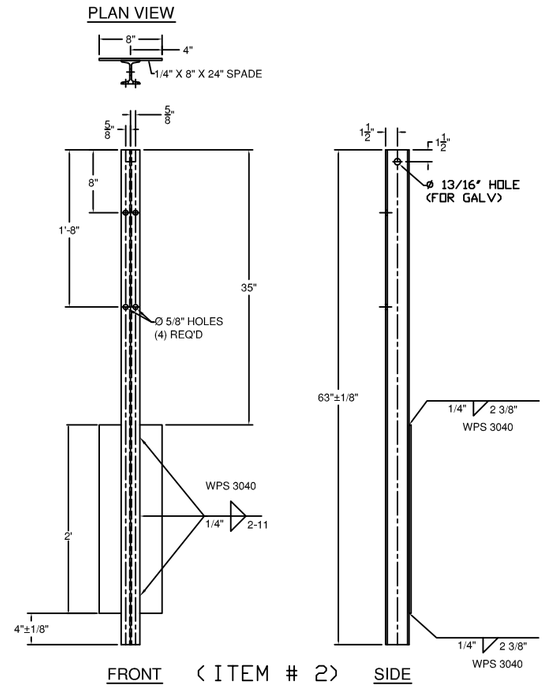

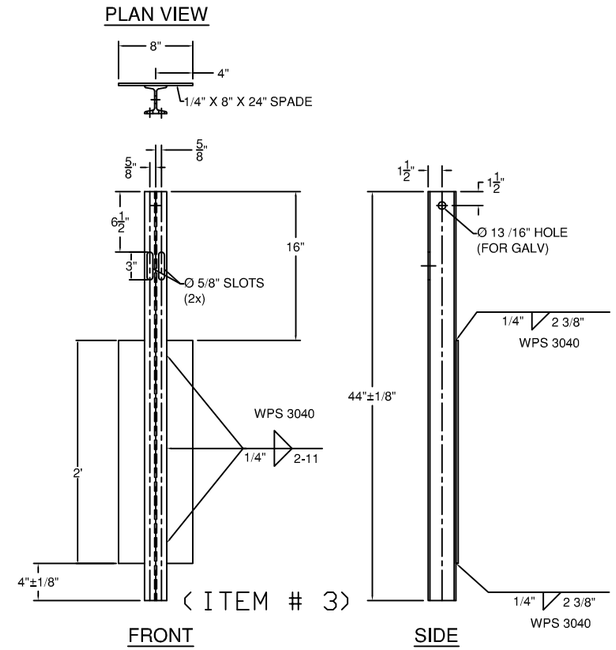

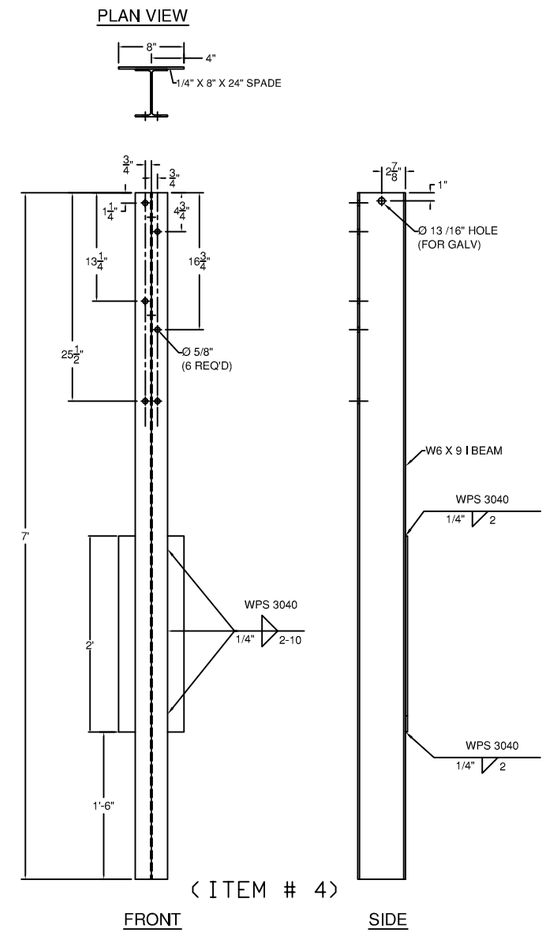

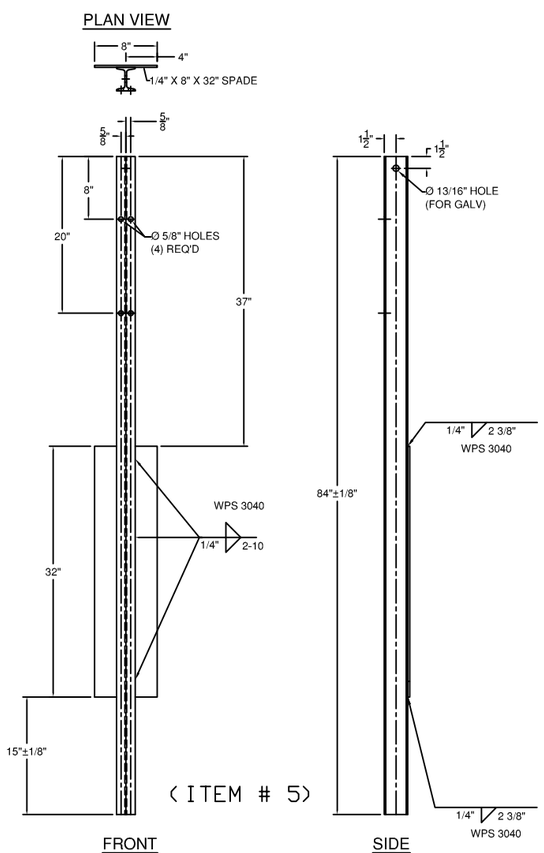

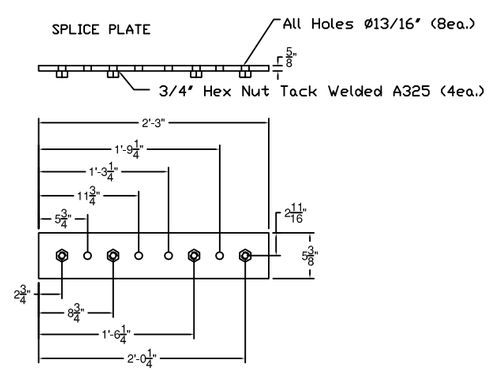

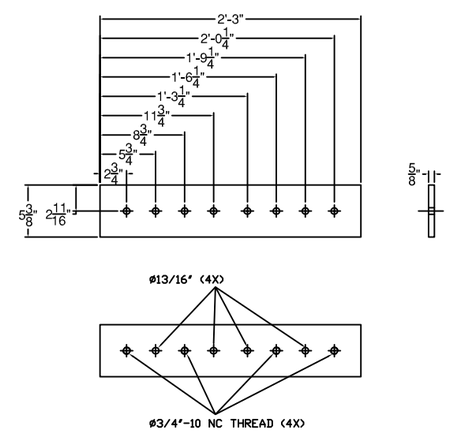

ALTERNATE SPLICE PLATE

ITEM #: 525.335

F.R. LAFAYETTE, P.O. 27399

SHEET 2 OF 4

Vermont Agency of Transportation
RECEIVED
F:\F.Lafayette-BRIGHTON Submittal 2-14-2013.pdf

CK'D BY R. Klinefelter OK'D BY J. Salvatori

February 14, 2013

RESUBMIT _____ Approved X

BY K. Higgins DATE 02/19/13

GUARD RAIL TO BRIDGE RAIL TRANSITION DETAILS SHEET

PROJECT: BRIGHTON, PROJECT # ER STP 034-3(25), MINOR ARTERIAL, BRIDGE # 84

TOWN OF BRIGHTON, ESSEX COUNTY, VT.

R	NO.	DATE	DESCRIPTION	BY	R	NO.	DATE	DESCRIPTION	BY
E	1	12/26/12	REVISED PER 12/26/12 EMAIL	E.P.	E				
V	2	1/9/13	REVISED PER 1/9/13 EMAIL	E.P.	V				

ELDERLEE, INC.
OAKS CORNERS, NEW YORK 14518
E-Mail: dlong@elderlee.com
Tel: 315-789-6670 Fax: 315-789-6615

AISC CERTIFIED FABRICATOR

DRAWN	E.P.	12/03/12
CHECKED	D.L.	12/03/12
APPROVED	.	.
SCALE	SCHEMATIC	
DRAWING NO.	F.R. LAFAYETTE BRIGHTON	

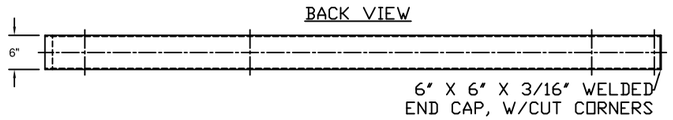

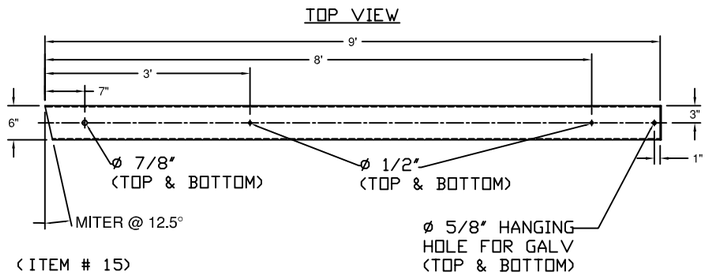

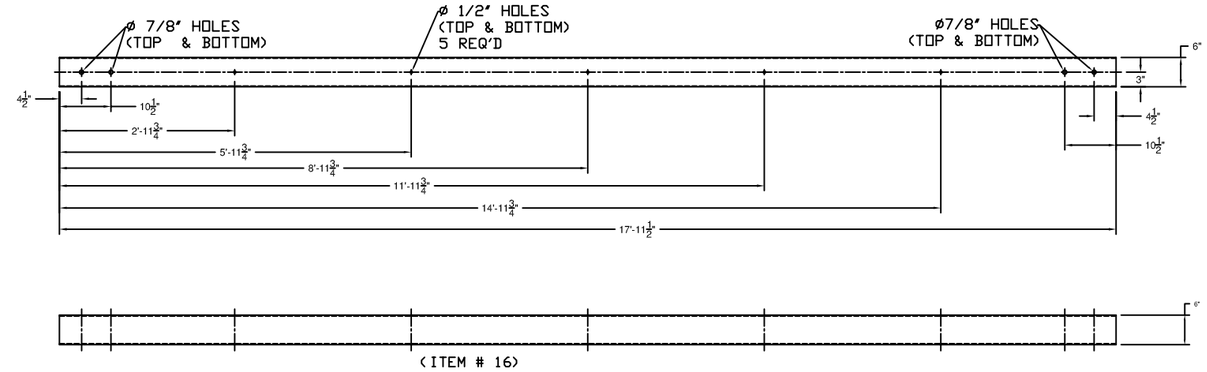

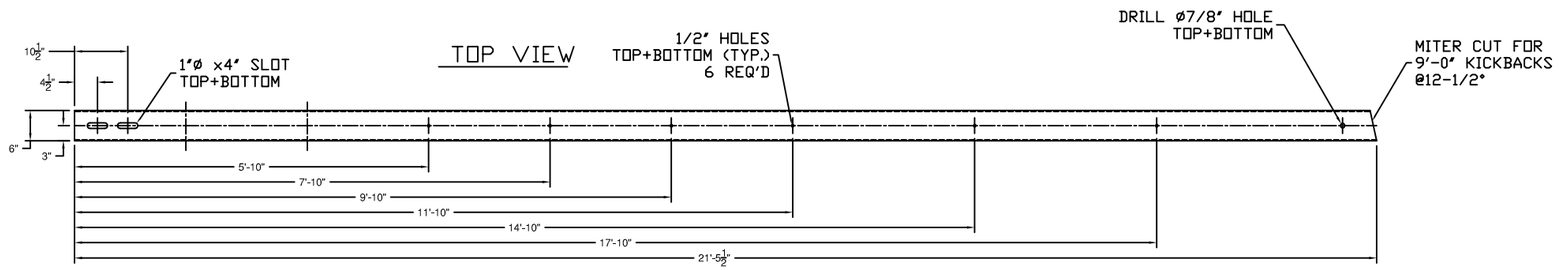

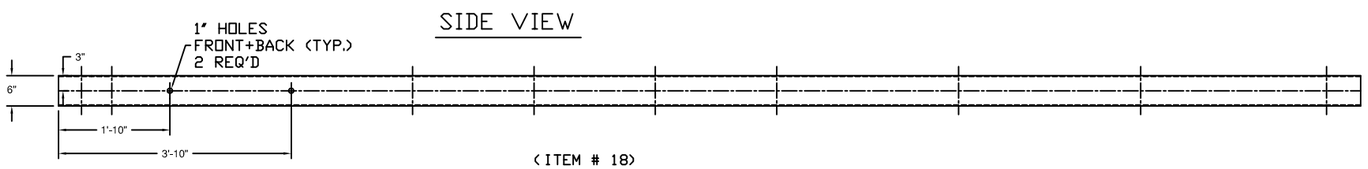

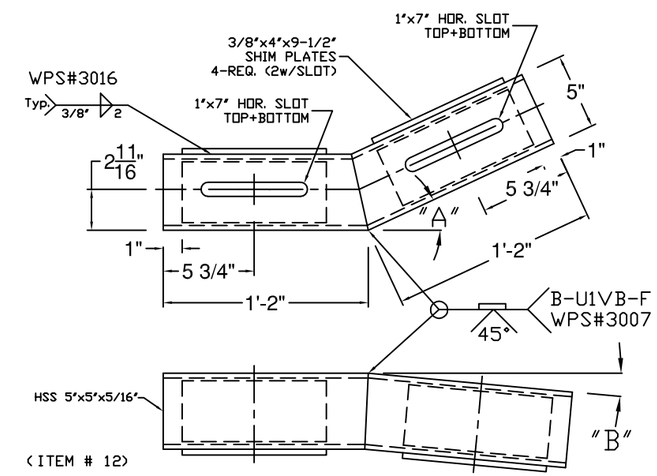

"A" - SEE PLAN FOR TURN BACK DISTANCE, SET ANGLE ACCORDINGLY.
"B" - TURN DOWN ANGLE SET BY THE 9" MEASURMENT AT THE END OF THE BOX BEAM.

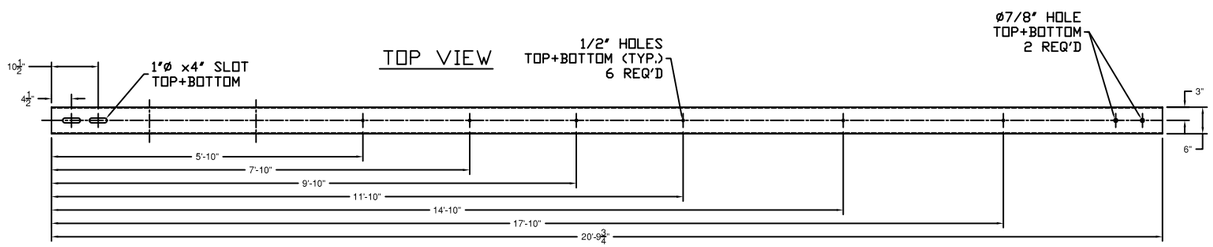

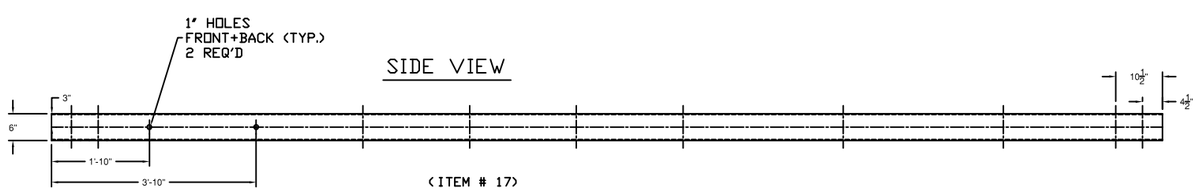

GENERAL NOTES:

1) ALL RAILING IS TO BE FABRICATED AND ERECTED ACCORDING TO SECTION 525 OF THE STANDARD SPECIFICATIONS.
2) BOLTS SHALL BE TORQUED SNUG TIGHT (APPROXIMATELY 100 FT-LB).
3) PROTRUSIONS CAUSED BY WELDING OR GALVANIZING ARE NOT PERMITTED ON THE ADJOINING SURFACES OF THE BOX BEAM RAILS, SPLICE TUBES AND FILL PLATES.
4) BOX BEAM TUBE AND STEEL POST MATERIALS, DIMENSION SIZES AND NOTES SHALL BE THE SAME AS THOSE OF THE BRIDGE RAIL, UNLESS OTHERWISE NOTED.

ITEM #: 525.335

F.R. LAFAYETTE, P.O. 27399

SHEET 3 OF 4

APPROVED BY:

Vermont Agency of Transportation
RECEIVED
CK'D BY R. Klinefelter OK'D BY J. Salvatori
February 14, 2013
RESUBMIT Approved X
BY K. Higgins DATE 02/19/13

GUARD RAIL TO BRIDGE RAIL TRANSITION DETAILS SHEET

PROJECT: BRIGHTON, PROJECT # ER STP 034-3(25), MINOR ARTERIAL, BRIDGE # 84
TOWN OF BRIGHTON, ESSEX COUNTY, VT.

R	NO.	DATE	DESCRIPTION	BY	R	NO.	DATE	DESCRIPTION	BY
E	1	12/26/12	REVISED PER 12/26/12 EMAIL	E.P.	E				
V	2	1/9/13	REVISED PER 1/9/13 EMAIL	E.P.	V				

ELDERLEE, INC.
OAKS CORNERS, NEW YORK 14518
E-Mail: dlong@elderlee.com
Tel: 315-789-6670 Fax: 315-789-6615

AISC CERTIFIED FABRICATOR

DRAWN	E.P.	12/03/12
CHECKED	D.L.	12/03/12
APPROVED	.	.
SCALE	SCHEMATIC	
DRAWING NO.	F.R. LAFAYETTE BRIGHTON	

SPLICE BAR - EXPANSION

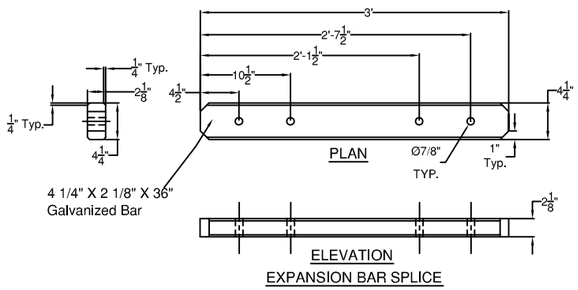

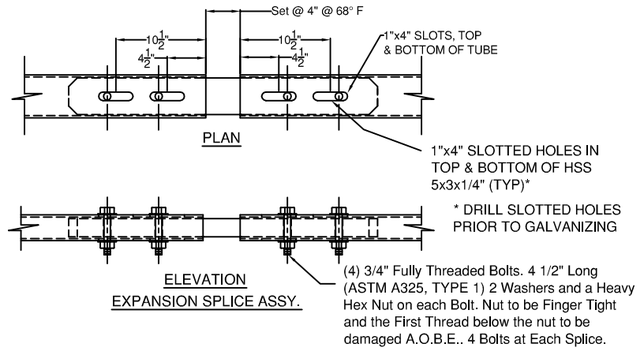

(ITEM # 9)

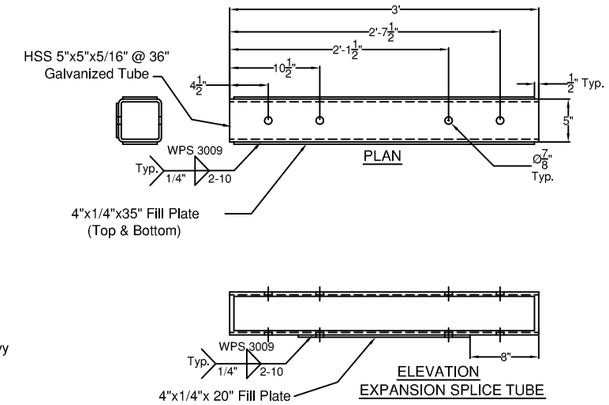

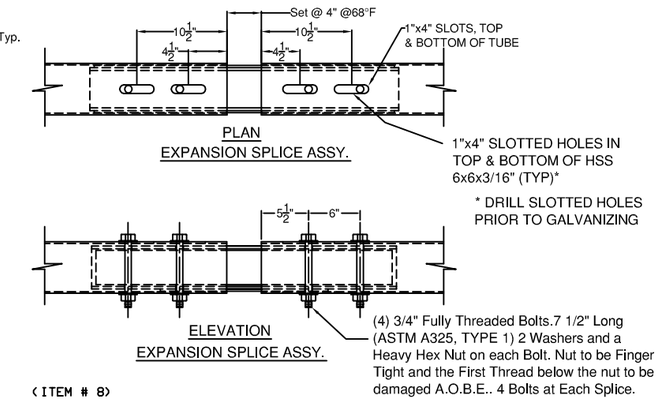

SPLICE TUBE - EXPANSION

(ITEM # 8)

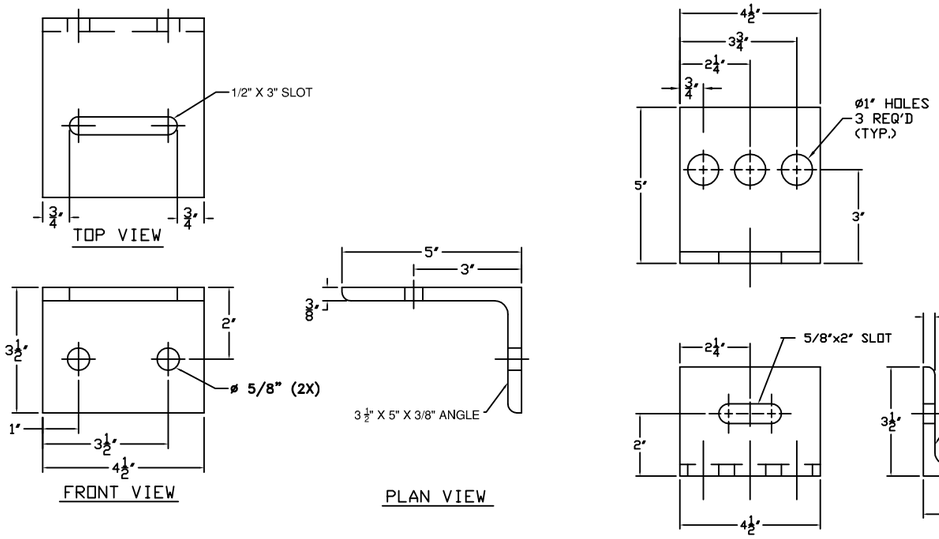

(ITEM # 10)

(ITEM # 11)

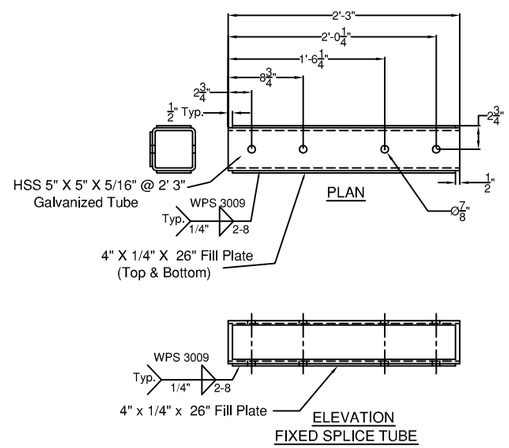

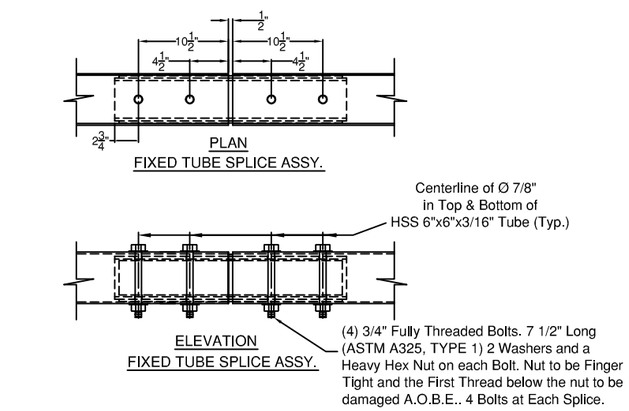

(ITEM # 7)

SPLICE TUBE - FIXED

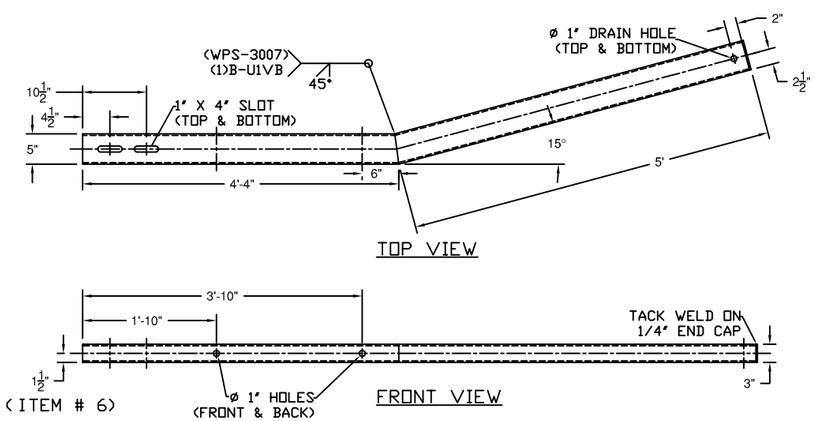

(ITEM # 6)

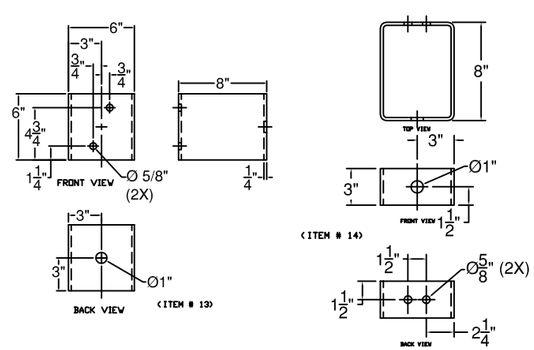

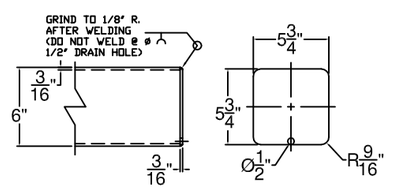

END COVER PLATE DETAIL

ITEM #: 525.335

F.R. LAFAYETTE, P.O. 27399

SHEET 4 OF 4

Vermont Agency of Transportation
RECEIVED
File Lafayette-BRIGHTON Submittal 2-14-2013.pdf

CK'D BY R. Klinefelter OK'D BY J. Salvatori

February 14, 2013

RESUBMIT _____ Approved X

BY K. Higgins DATE 02/19/13

GUARD RAIL TO BRIDGE RAIL TRANSITION DETAILS SHEET

PROJECT: BRIGHTON, PROJECT # ER STP 034-3(25), MINOR ARTERIAL, BRIDGE # 84

TOWN OF BRIGHTON, ESSEX COUNTY, VT.

R	NO.	DATE	DESCRIPTION	BY	R	NO.	DATE	DESCRIPTION	BY
E	1	12/26/12	REVISED PER 12/26/12 EMAIL	E.P.	E				
V	2	1/9/13	REVISED PER 1/9/13 EMAIL	E.P.	V				

ELDERLEE, INC.
OAKS CORNERS, NEW YORK 14518
E-Mail: dlong@elderlee.com
Tel: 315-789-6670 Fax: 315-789-6615

AISC CERTIFIED FABRICATOR

DRAWN	E.P.	12/03/12
CHECKED	D.L.	12/03/12
APPROVED	.	.
SCALE	SCHEMATIC	
DRAWING NO.	F.R. LAFAYETTE BRIGHTON	