casella CONSTRUCTION INC.
SITE DEVELOPMENT, EXCAVATION, DEMOLITION
WATER AND SEWER SYSTEMS
AGGREGATE OPERATIONS

Solid Waste Management
Landfill Sitework and Closures
8 U.S. ROUTE 4 EAST, MENDON, VERMONT 05701 802/773-0052
FAX 802/747-7992

Submittal

To: State of Vermont Agency of Transportation
Southwest Regional Construction Office
61 Valley View
Mendon, VT 05701

Date: March 12, 2015
Project: Shrewsbury STP 1443 (44)

Contract: Shrewsbury STP 1443 (44)

Attention: Carolyn Carlson

From: Jeff Chase

Copies	Submittal Number	Specification Section	Description
Electronic	1.2	540.10	Precast Concrete Structure - Resubmittal

Contractors Review and Comments

Reviewed By: Jeff Chase

Comments: Re-Submittal contains plans and calculations for the 12' X 8' Rigid Frame, Footings, Wingwalls, and Headwalls. Also included in resubmittal are the lifter capacity checks.

Engineers Review Stamp and Comments

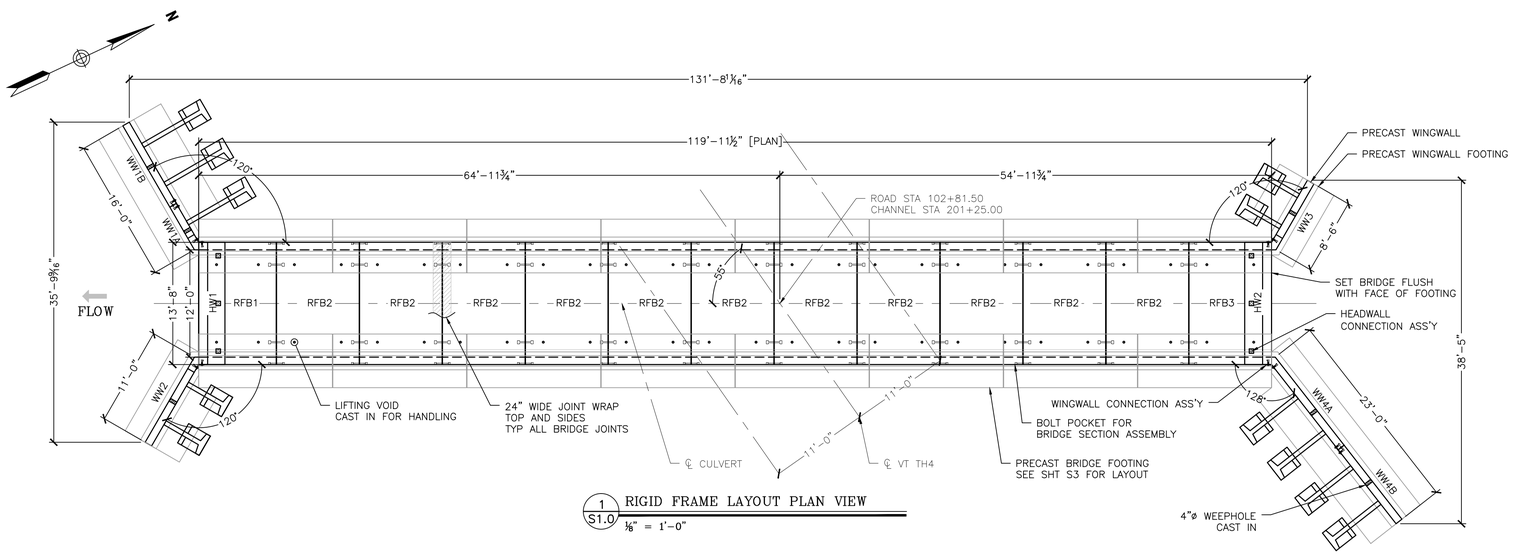

1 S1.0 RIGID FRAME LAYOUT PLAN VIEW
⅛" = 1'–0"

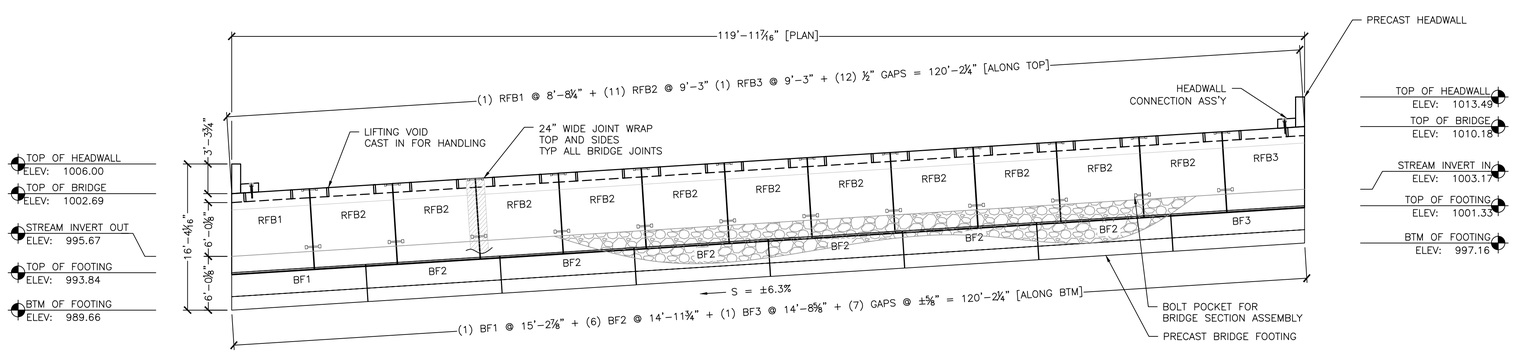

2 S1.0 RIGID FRAME PROFILE VIEW
⅛" = 1'–0"

NOTE:
WINGWALLS NOT SHOWN IN THIS VIEW FOR CLARITY

BILL OF MATERIALS

QTY	DESCRIPTION	IN STOCK
	ITEMS CAST-IN	
114	5-TON UTILITY ANCHORS	
4	RL-4 8TON TECH ANCHORS	
28	1-8NC 6X6 DOUBLE WINGWALL ANCHORS	
6	4" PVC X 10"L SLEEVES	
6	6" X 6" X 4" POCKET	
6	3" PVC X 8" LONG	
6	MB CX-51 COIL THREAD INSERT	
	ITEMS FOR PRE-SHIPMENT PREPARATION	
600LF	1" NEOPRENE (25LF/ROLL)	
2 GAL	RED ADHESIVE (250 SF/GAL)	
	ITEMS TO SHIP TO THE JOB	
380LF	ROYSTON AHT104 24" WIDE JOINT WRAP (50LF/ROLL)	
4 GAL	ROYBOND 740 ADHESIVE PRIMER (2 ROLLS/GAL)	
4	180DEG 1/2" X 10" X 14" GALV BRACKET	
6	120DEG 1/2" X 10" X 14" GALV BRACKET	
3	128DEG 1" X 10" X 14" GALV BRACKET	
64	1" X 5" GALV ROD WITH PLATE WASHER AND NUT	
6	1" X 13.5" GALV COIL ROD WITH HD NUT AND PLATE WASHER	
18	#6 X 16"L DOWEL	
78	7/8" X 18" GALV ROD W/ 2 NUTS & 4 WASHERS	
204	1/4" SHIMS	

GENERAL NOTES:

1. THE PLANS ARE INTENDED TO BE DRAWN TO SCALE. HOWEVER, IF A CRITICAL DIMENSION IS NOT PROVIDED, MICHIE CORPORATION SHOULD BE CONTACTED FOR VERIFICATION.

2. IF ANY OF THE WORK TO BE DONE AS SHOWN ON THE DRAWINGS DOES NOT CORRESPOND WITH THE EXISTING FIELD CONDITIONS, CONTACT THE ENGINEER PRIOR TO PROCEEDING WITH THE WORK IN QUESTION.

3. FIELD–VERIFY ALL ELEVATIONS PRIOR TO THE START OF CONSTRUCTION. IF THERE ARE ANY DISCREPANCIES, CONSULT THE ENGINEER PRIOR TO PROCEEDING WITH THE WORK IN QUESTION.

4. MAINTAIN MINIMUM 60 DEGREE SLING ANGLE WHEN HANDLING PRECAST COMPONENTS.

5. PRECAST COMPONENTS SHALL REACH A MINIMUM COMPRESSIVE STRENGTH OF 3,000 PSI PRIOR TO STRIPPING, AND THE MINIMUM DESIGN COMPRESSIVE STRENGTH PRIOR TO SHIPPING, UNLESS OTHERWISE DIRECTED BY THE ENGINEER.

6. ALL JOINTS AND VOIDS SHALL BE FILLED WITH NON–SHRINK GROUT. VERTICAL SURFACE VOIDS MAY BE FILLED WITH FOAM SEALANT.

7. SHOP DRAWINGS WERE DEVELOPED USING THE FOLLOWING RESOURCES FOR THE CONTRACT:
- "PROPOSED IMPROVEMENT BRIDGE PROJECT, TOWN OF SHREWSBURY, COUNT OF RUTLAND, TH4, BR 37, VTAOT PROJECT # STP 1443 (44)." SHEETS 1–36 OF 36 BY VTAOT, DATED 5–22–14

8. IF THERE IS ADDITIONAL INFORMATION PERTINENT TO THE FABRICATION AND INSTALLATION OF THESE UNITS THAT IS NOT CONTAINED WITHIN THE RESOURCES LISTED ABOVE IT SHALL BEBROUGHT TO THE ATTENTION OF MICHIE CORPORATION. FAILURE TO MAKE SUCH ADDITIONAL INFORMATION AVAILABLE SHALL RELIEVE MICHIE CORPORATION OF ALL LIABILITIES ARISING FROM ERRORS OR OMISSIONS RELATED TO THE OMITTED INFORMATION.

THREE SIDED RIGID FRAME NOTES:

1. THREE SIDED RIGID FRAME SECTIONS ARE DESIGNED IN ACCORDANCE WITH
- AASHTO "LRFD BRIDGE DESIGN SPECIFICATIONS", 6TH EDITION.
- VTRANS 2011 "STANDARD SPECIFICATIONS FOR CONSTRUCTION".

2. THE FOLLOWING CRITERIA WAS USED FOR DESIGN:
- LIVE LOAD: AASHTO HL–93
- EARTH COVER: 14–16 FEET
- BACKFILL SOIL UNIT WEIGHT: 140 PCF
- MINIMUM LATERAL EARTH PRESSURE: 35 PSF
- MAXIMUM LATERAL EARTH PRESSURE: 70 PSF
- CONCRETE STRENGTH: 5,000 PSI
- STEEL YIELD STRENGTH: 60,000 PSI

3. RIGID FRAME CONCRETE SHALL BE SELF–CONSOLIDATING CONFORMING TO ASTM C260 WITH A MINIMUM 28–DAY COMPRESSIVE STRENGTH OF 5,000 PSI, MICHIE MIX DESIGN 1953CAS. AGGREGATE SHALL CONFORM TO ASTM C–33 WITH A MAXIMUM DIAMETER OF 3/4". CEMENT SHALL CONFORM TO ASTM C150.

4. REINFORCING SHALL BE GRADE 60 DEFORMED BLACK BARS CONFORMING TO ASTM A–615. ALL BARS SHALL BE BENT COLD.

5. ALL EXPOSED EDGES EXCEPT WHERE NOTED SHALL BE CHAMFERED 1".

6. ALL EXPOSED EDGES OF CONCRETE SHALL BE COATED WITH A VTRANS APPROVED WATER REPELLANT, SHOP APPLIED.

7. EACH SECTION SHALL BE PROVIDED WITH BOLT POCKETS FOR ATTACHMENT TO ADJACENT SECTIONS. 7/8" DIA. GALV. THREADED ROD, WASHERS AND NUTS SHALL BE PROVIDED FOR ASSEMBLY IN THE FIELD. CLOSED–CELL NEOPRENE JOINT SEALANT SHALL BE USED IN ALL JOINTS.

8. 2FT WIDE ROYSTON JOINT WRAP WITH ADHESIVE PROVIDED BY MICHIE CORP, INSTALLED BY OTHERS, CENTER ON JOINT AFTER GROUTING. INSTALL PER VTRANS SPECIFICATIONS.

HEADWALL NOTES:

1. HEADWALL CONCRETE SHALL BE SELF–CONSOLIDATING CONFORMING TO ASTM C260 WITH A MINIMUM 28–DAY COMPRESSIVE STRENGTH OF 5,000 PSI, MICHIE MIX DESIGN 1953CAS. AGGREGATE SHALL CONFORM TO ASTM C–33 WITH A MAXIMUM DIAMETER OF 3/4". CEMENT SHALL CONFORM TO ASTM C150.

2. REINFORCING SHALL BE GRADE 60 DEFORMED BLACK BARS CONFORMING TO ASTM A–615. ALL BARS SHALL BE BENT COLD.

3. ALL EXPOSED EDGES EXCEPT WHERE NOTED SHALL BE CHAMFERED 1".

4. ALL EXPOSED EDGES OF CONCRETE SHALL BE COATED WITH A VTRANS APPROVED WATER REPELLANT, SHOP APPLIED.

PRECAST CONCRETE FOOTING NOTES:

1. FOOTING SECTIONS ARE DESIGNED IN ACCORDANCE WITH
- AASHTO "LRFD BRIDGE DESIGN SPECIFICATIONS", 6TH EDITION.
- VTRANS 2011 "STANDARD SPECIFICATIONS FOR CONSTRUCTION".

2. THE FOLLOWING CRITERIA WAS USED FOR DESIGN:
- BACKFILL SOIL UNIT WEIGHT: 140 PCF
- BACKFILL SOIL FRICTION ANGLE: 34 DEG
- CONCRETE STRENGTH: 5,000 PSI
- STEEL YIELD STRENGTH: 60,000 PSI
- FACTORED BEARING RESISTANCE: VARIES BY EFFECTIVE WIDTH, PER NOTE 3 SHEET 6.

3. FOOTING CONCRETE SHALL BE SELF–CONSOLIDATING CONFORMING TO ASTM C260 WITH A MINIMUM 28–DAY COMPRESSIVE STRENGTH OF 5,000 PSI, MICHIE MIX DESIGN 1953CAS. AGGREGATE SHALL CONFORM TO ASTM C–33 WITH A MAXIMUM DIAMETER OF 3/4". CEMENT SHALL CONFORM TO ASTM C150.

4. UNLESS NOTED OTHERWISE, REINFORCING SHALL BE GRADE 60 DEFORMED BLACK BARS CONFORMING TO ASTM A–615. ALL BARS SHALL BE BENT COLD.

5. ALL EXPOSED EDGES EXCEPT WHERE NOTED SHALL BE CHAMFERED 1".

6. EACH FOOTING SECTION SHALL BE PROVIDED WITH BOLT POCKETS FOR ATTACHMENT TO ADJACENT SECTIONS. 7/8" DIA. GALV. THREADED ROD, WASHERS AND NUTS SHALL BE PROVIDED FOR ASSEMBLY IN THE FIELD. CLOSED–CELL NEOPRENE JOINT SEALANT SHALL BE USED IN ALL JOINTS. FILL KEY WAY WITH NON–SHRINK GROUT PRIOR TO ERECTION OF BRIDGE UNITS. FILL TROUGH WITH NON–SHRINK GROUT AFTER SETTING BRIDGE UNITS.

WING WALL NOTES:

1. SECTIONS ARE DESIGNED IN ACCORDANCE WITH
- AASHTO "LRFD BRIDGE DESIGN SPECIFICATIONS", 6TH EDITION
- VTRANS 2011 "STANDARD SPECIFICATIONS FOR CONSTRUCTION".

2. THE FOLLOWING SOIL PROPERTIES WERE USED IN THE DESIGN:

	SOIL WEIGHT [PCF]	FRICTION ANGLE [DEG]
• RETAINED SOIL	140	34
• FOUNDATION SOIL	130	36

- LIVE LOAD SURCHARGE = NONE
- BACKSLOPE ANGLE: VARIES, SEE DESIGN
  FACTORED BEARING RESISTANCE = 10.0 KSF (STRENGTH LIMIT STATE) PER NOTE 3 SHEET 6.

3. CONCRETE SHALL BE SELF–CONSOLIDATING CONFORMING TO ASTM C260 WITH A MINIMUM 28–DAY COMPRESSIVE STRENGTH OF 5,000 PSI, MICHIE MIX DESIGN 1953CAS. AGGREGATE SHALL CONFORM TO ASTM C–33 WITH A MAXIMUM DIAMETER OF 3/4". CEMENT SHALL CONFORM TO ASTM C150.

4. REINFORCING SHALL BE GRADE 60 DEFORMED BLACK BARS CONFORMING TO ASTM A–615. ALL BARS SHALL BE BENT COLD.

5. ALL EXPOSED EDGES EXCEPT WHERE NOTED SHALL BE CHAMFERED 1".

6. ALL EXPOSED EDGES OF CONCRETE SHALL BE COATED WITH A VTRANS APPROVED WATER REPELLANT, SHOP APPLIED.

SHEET LIST

S1.0 – LAYOUT VIEWS
S2.0 – END ELEVATIONS AND CONNECTION DETAILS
S3.0 – FOOTING LAYOUT AND BRIDGE FOOTING DETAILS
S4.0 – WINGWALL FOOTING DETAILS
S5.0 – RIGID FRAME AND CURBWALL DETAILS
S6.0 – WINGWALLS WW1 AND WW2 DETAILS
S7.0 – WINGWALLS WW3 AND WW4 DETAILS
S8.0 – ANCHOR DETAILS

No.	Date	Revision	By
1	2/26/2015	Revised per EOR	PJL

MICHIE CORPORATION
173 BUXTON INDUSTRIAL DRIVE - PO BOX 870
HENNIKER, NH 03242
PHONE: 603-428-3218
FAX: 603-428-7426
WWW.MICHIECORP.COM

TH4 over Branch of Mill River - VTAOT STP 1443 (44)
BR No 37 - Shrewsbury, VT

12'-0" x 8'-0" Rigid Frame Bridge
Layout Views

Scale: AS SHOWN
Checked by: CFP
Drawn by: PJL
Designed by: PJL
Project No. 5576
Date: 12/24/2014

Prepared for:
Casella Construction
8 US4 East
Mendon VT 05701

DWG NO.
S1.0

L:\PROJECTS\CASELLA CONSTRUCTION\SHREWSBURY, VT - VTAOT STP 1443 (44)\WINGWALL\BR 1268 (CASELLA 2014).DWG, 7/10/2014 4:31 PM

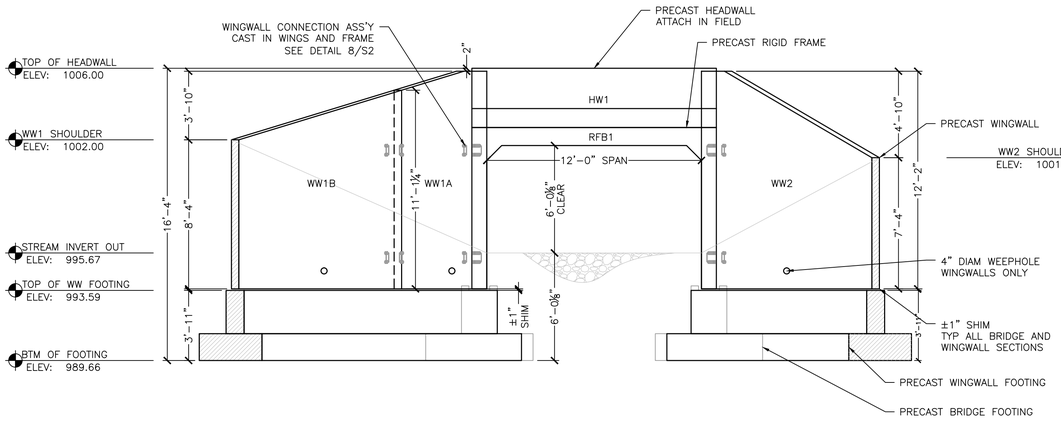

1 S2.0 OUTLET END ELEVATION
¼" = 1'-0"

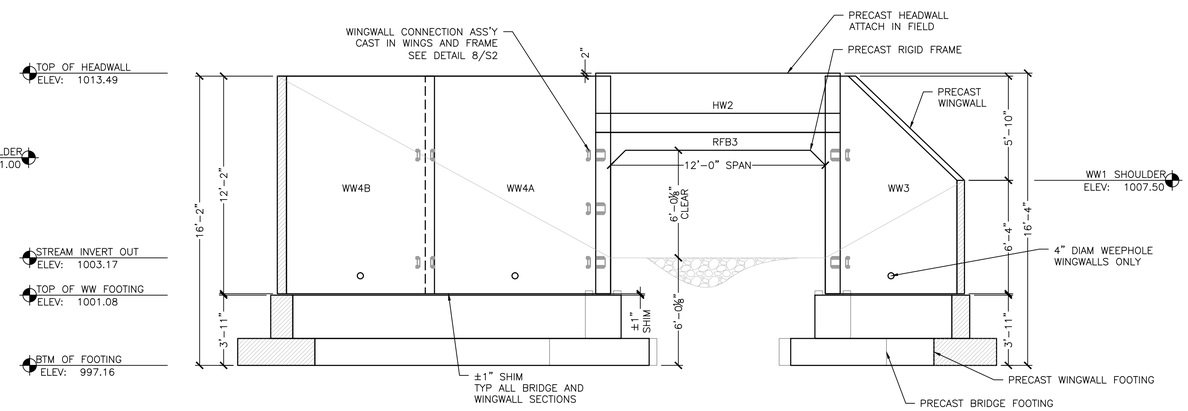

2 S2.0 INLET END ELEVATION
¼" = 1'-0"

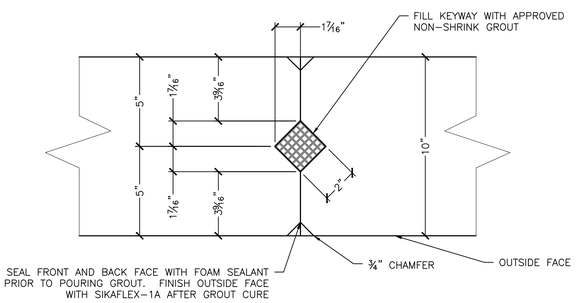

3 S2.0 WINGWALL VERTICAL KEYWAY DETAIL
3" = 1'-0"

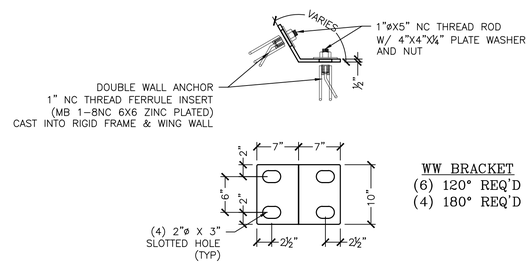

5A S2.0 ½" WINGWALL BRACKET DETAIL
1" = 1'-0"

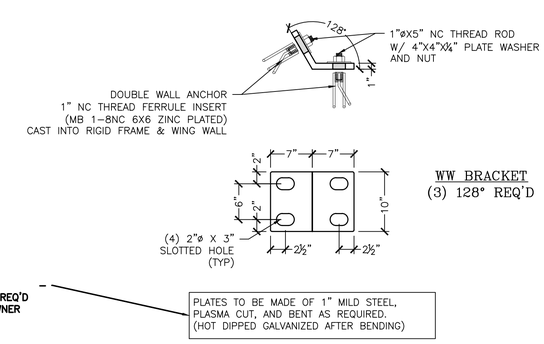

5B S2.0 1" WINGWALL BRACKET DETAIL
1" = 1'-0"

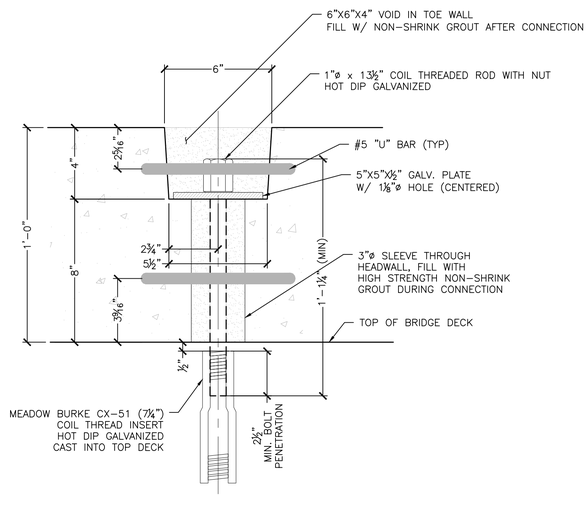

4 S2.0 HEADWALL ANCHORAGE DETAIL
3" = 1'-0"

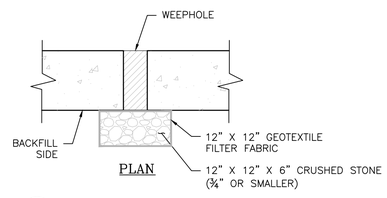

6 S2.0 WEEPHOLE BACKFILL DETAIL
1" = 1'-0"

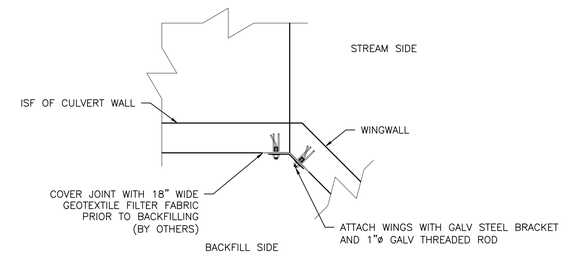

8 S2.0 BRIDGE TO WW JOINT DETAIL
½" = 1'-0"

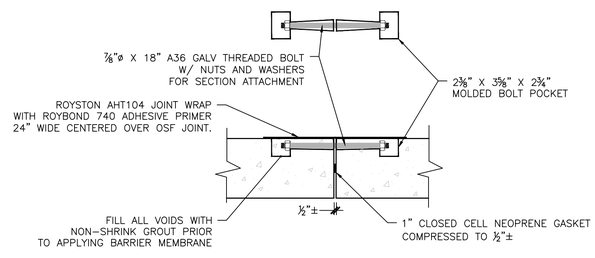

7 S2.0 RIGID FRAME JOINT DETAIL
1" = 1'-0"

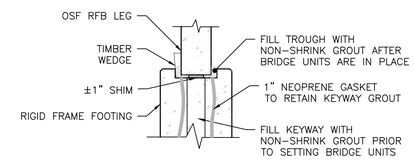

9 S2.0 UNIT SETTING DETAILS
½" = 1'-0"

No.	Date	Revision	By
1	2/26/2015	Revised per EOR	PJL

MICHIE CORPORATION
173 BUXTON INDUSTRIAL DRIVE, PO BOX 870
HENNIKER, NH 03242
PHONE: 603-428-3218
FAX: 603-428-7426
WWW.MICHIECORP.COM

TH4 over Branch of Mill River - VTAOT STP 1443 (44)
BR No 37 - Shrewsbury, VT

12'-0" x 8'-0" Rigid Frame Bridge
End Elevations and Connection Details

Project No. 5576 | Scale: AS SHOWN
Date: 12/24/2014 | Designed by: PJL | Drawn by: PJL | Checked by: CFP

Prepared for:
Casella Construction
8 US4 East
Mendon VT 05701

DWG NO.
S2.0

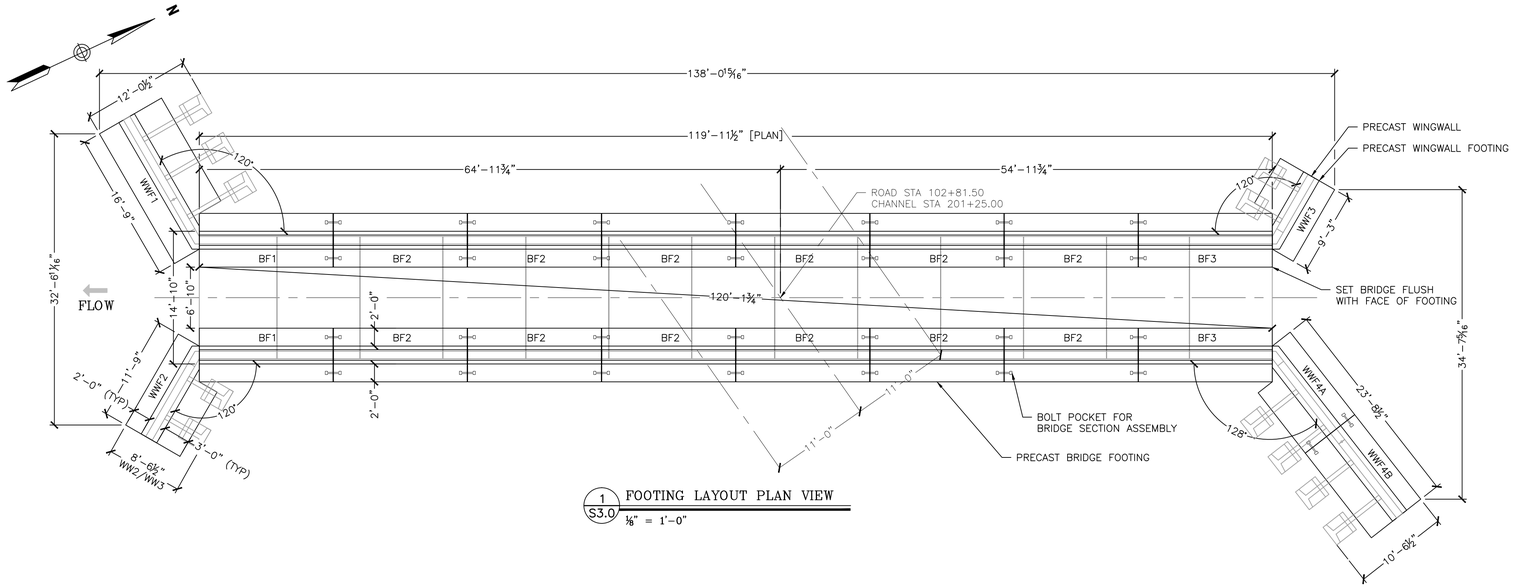

1 S3.0 FOOTING LAYOUT PLAN VIEW
⅛" = 1'-0"

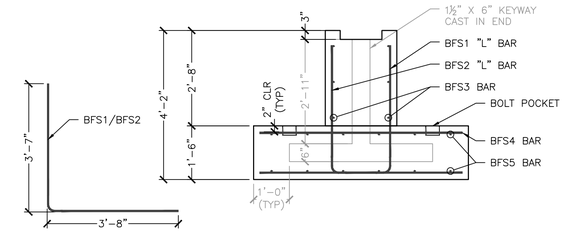

8 S3.0 BRIDGE FOOTING REINFORCING SECTION
½" = 1'-0"

BRIDGE FOOTING REINFORCING SCHEDULE

ITEM	MARK	SIZE	BEND	SPACING	QTY	LENGTH
BF1	BFS1	#5	L	10"	19	7'-1½"
	BFS2	#5	L	10"	19	7'-1½"
	BFS3	#4	STR	12"	6	14'-10" LP
	BFS4	#5	STR	10"	19	5'-8"
	BFS5	#4	STR	12"	12	14'-11" LP
BF2	BFS1	#5	L	10"	19	7'-1½"
	BFS2	#5	L	10"	19	7'-1½"
	BFS3	#4	STR	12"	6	14'-8"
	BFS4	#5	STR	10"	19	5'-8"
	BFS5	#4	STR	12"	12	14'-8"
BF3	BFS1	#5	L	10"	18	7'-1½"
	BFS2	#5	L	10"	18	7'-1½"
	BFS3	#4	STR	12"	6	14'-7¾" LP
	BFS4	#5	STR	10"	18	5'-8"
	BFS5	#4	STR	12"	12	14'-5¾" LP

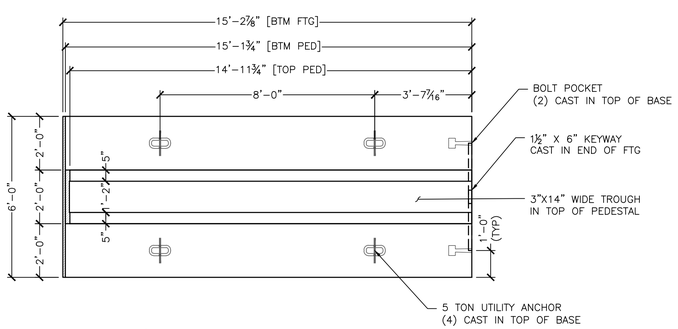

2 S3.0 BRIDGE FOOTING BF1 PLAN VIEW
⅜" = 1'-0"

BF1 - 2 REQ'D
ITEM #282400
BASE: 5.06CY
PEDESTAL: 2.82CY
TOTAL WT: 33,100#

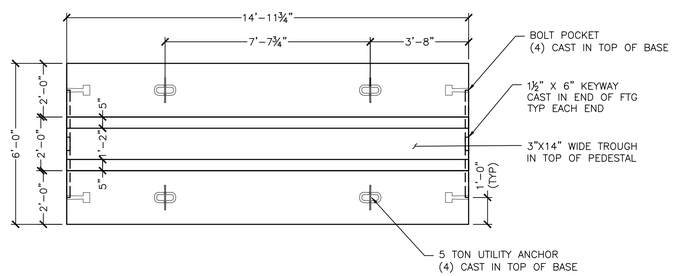

4 S3.0 BRIDGE FOOTING BF2 PLAN VIEW
⅜" = 1'-0"

BF2 - 12 REQ'D
ITEM #282400
BASE: 4.99CY
PEDESTAL: 2.80CY
TOTAL WT: 32,710#

NOTE:
BUILDER MAY INSTALL ADDITIONAL
LIFTERS FOR HANDLING

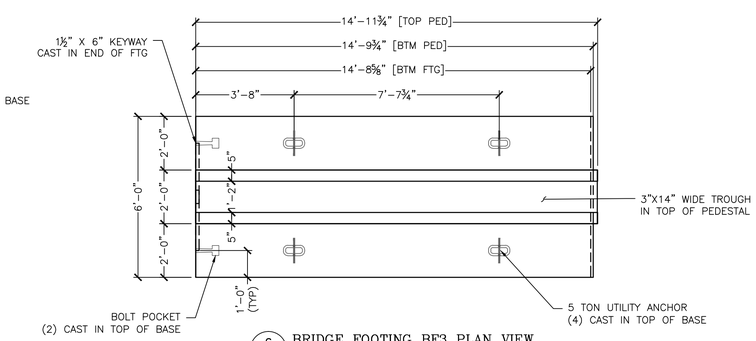

6 S3.0 BRIDGE FOOTING BF3 PLAN VIEW
⅜" = 1'-0"

BF3 - 2 REQ'D
ITEM #282400
BASE: 4.92CY
PEDESTAL: 2.78CY
TOTAL WT: 32,340#

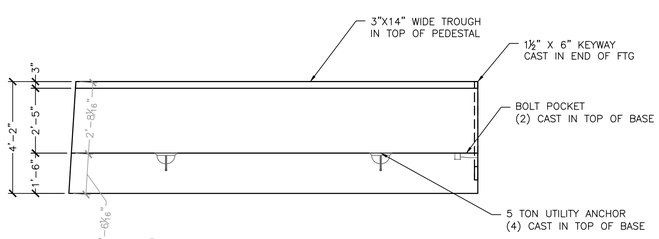

3 S3.0 BRIDGE FOOTING BF1 ELEVATION VIEW
⅜" = 1'-0"

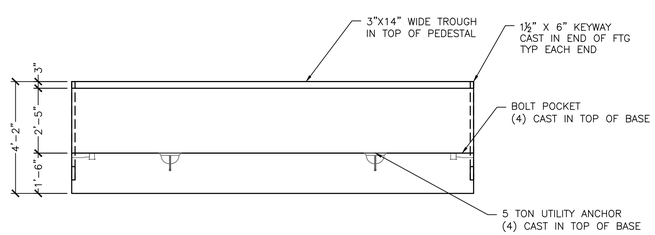

5 S3.0 BRIDGE FOOTING BF2 ELEVATION VIEW
⅜" = 1'-0"

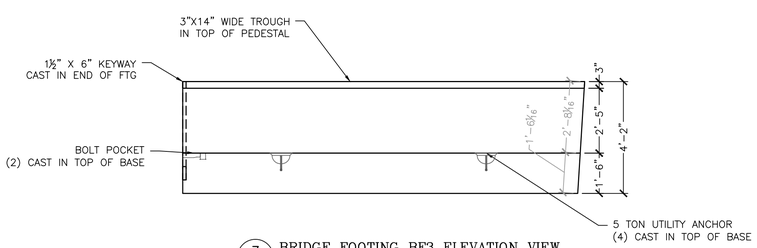

7 S3.0 BRIDGE FOOTING BF3 ELEVATION VIEW
⅜" = 1'-0"

No.	Date	Revision	By
1	2/26/2015	Revised per EOR	PJL

MICHIE CORPORATION
173 BUXTON INDUSTRIAL DRIVE - PO BOX 870
HENNIKER, NH 03242
PHONE: 603-428-3218
FAX: 603-428-7426
WWW.MICHIECORP.COM

TH4 over Branch of Mill River - VTAOT STP 1443 (44)
BR No 37 - Shrewsbury, VT

12'-0" x 8'-0" Rigid Frame Bridge
Footing Layout and Bridge Footing Details

Project No. 5576
Date: 12/24/2014
Designed by: PJL
Drawn by: PJL
Checked by: CFP
Scale: AS SHOWN

Prepared for:
Casella Construction
8 US4 East
Mendon VT 05701

DWG NO.
S3.0

V:\PROJECTS\CASELLA CONSTRUCTION\SHREWSBURY, VT - VTAOT STP 1443 (44)\DWGS\BFB 1268 CASELLA 5576.DWG 3/10/2015 4:01 PM

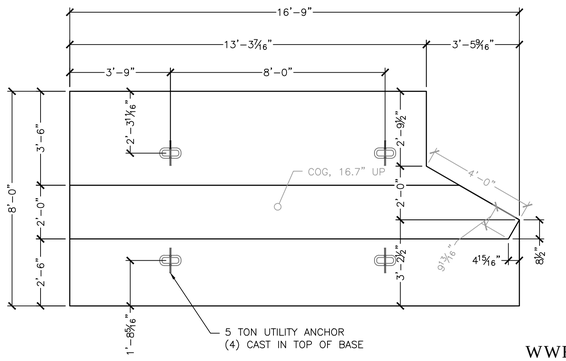

1 S4.0 WINGWALL FOOTING WWF1 PLAN VIEW
3/8" = 1'-0"

WWF1 - 1 REQ'D
ITEM #282401
BASE: 6.71CY
PEDESTAL: 2.86CY
TOTAL WT: 40,215#

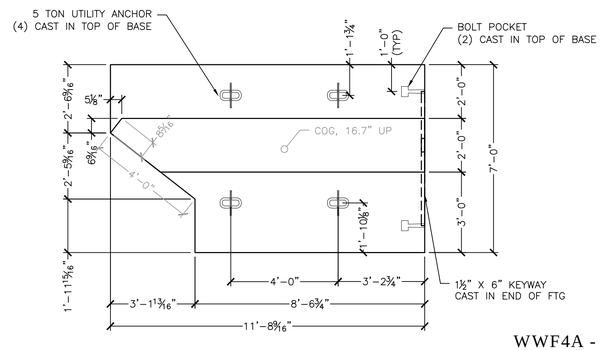

4 S4.0 WINGWALL FOOTING WWF4A PLAN VIEW
3/8" = 1'-0"

WWF4A - 1 REQ'D
ITEM #282401
BASE: 3.99CY
PEDESTAL: 1.96CY
TOTAL WT: 25,010#

NOTE:
BUILDER MAY INSTALL ADDITIONAL LIFTERS FOR HANDLING

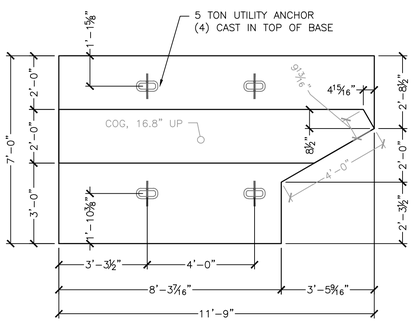

2 S4.0 WINGWALL FOOTING WWF2 PLAN VIEW
3/8" = 1'-0"

WWF2 - 1 REQ'D
ITEM #282401
BASE: 3.94CY
PEDESTAL: 1.96CY
TOTAL WT: 24,780#

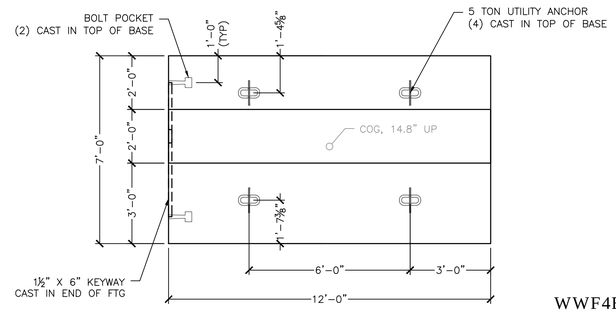

5 S4.0 WINGWALL FOOTING WWF4B PLAN VIEW
3/8" = 1'-0"

WWF4B - 1 REQ'D
ITEM #282401
BASE: 4.67CY
PEDESTAL: 2.15CY
TOTAL WT: 28,640#

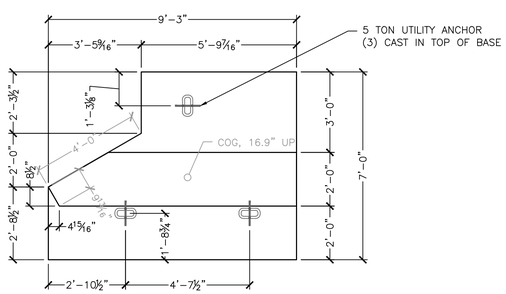

3 S4.0 WINGWALL FOOTING WWF3 PLAN VIEW
3/8" = 1'-0"

WWF3 - 1 REQ'D
ITEM #282401
BASE: 2.96CY
PEDESTAL: 1.51CY
TOTAL WT: 18,790#

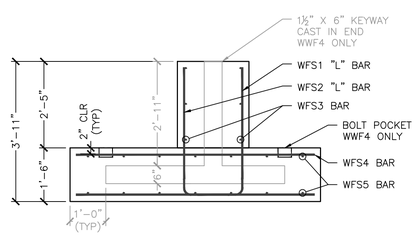

6 S4.0 WINGWALL FTG REINFORCING SECTION
1/2" = 1'-0"

WINGWALL FOOTING REINFORCING NOTES:
* TRIM LEG OF WFS1 "L" BARS TO FIT IN TAPERED ENDS (10" MIN)
* TURN WFS1 BAR WHEN 10" MIN LEG DOES NOT FIT

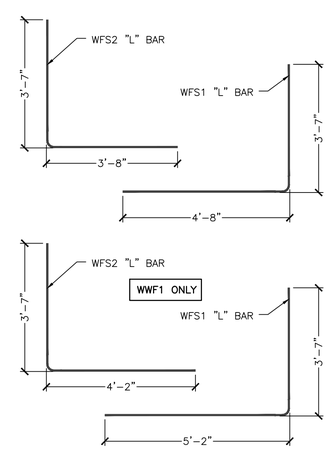

WINGWALL FOOTING REINFORCING SCHEDULE						
ITEM	MARK	SIZE	BEND	SPACING	QTY	LENGTH
WWF1	WFS1	#5	L	9"	23	8'-7½"
	WFS2	#6	L	9"	18	7'-7½"
	WFS3	#4	STR	12"	6	16'-0" LP
	WFS4	#5	STR	8"	26	7'-8"
	WFS5	#4	STR	12"	16	16'-5" LP
WWF2	WFS1	#5	L	10"	14	8'-1½"
	WFS2	#5	L	10"	12	7'-1½"
	WFS3	#4	STR	12"	6	11'-0" LP
	WFS4	#5	STR	10"	14	6'-8"
	WFS5	#4	STR	12"	14	11'-5" LP
WWF3	WFS1	#5	L	10"	11	8'-1½"
	WFS2	#5	L	10"	9	7'-1½"
	WFS3	#4	STR	12"	6	8'-6" LP
	WFS4	#5	STR	10"	11	6'-8"
	WFS5	#4	STR	12"	14	8'-11" LP
WWF4A	WFS1	#5	L	10"	14	8'-1½"
	WFS2	#5	L	10"	12	7'-1½"
	WFS3	#4	STR	12"	6	10'-11½" LP
	WFS4	#5	STR	10"	14	6'-8"
	WFS5	#4	STR	12"	14	11'-4½" LP
WWF4B	WFS1	#5	L	10"	15	8'-1½"
	WFS2	#5	L	10"	15	7'-1½"
	WFS3	#4	STR	12"	6	11'-8"
	WFS4	#5	STR	10"	15	6'-8"
	WFS5	#4	STR	12"	14	11'-8"

No.	Date	Revision	By
1	2/26/2015	Revised per EOR	PJL

MICHIE CORPORATION
173 BUXTON INDUSTRIAL DRIVE - PO BOX 870
HENNIKER, NH 03242
PHONE: 603-428-3218
FAX: 603-428-7426
WWW.MICHIECORP.COM

TH4 over Branch of Mill River - VTAOT STP 1443 (44)
BR No 37 - Shrewsbury, VT

12'-0" x 8'-0" Rigid Frame Bridge
Wingwall Footing Details

Project No. 5576
Date: 12/24/2014
Designed by: PJL
Drawn by: PJL
Checked by: CFP
Scale: AS SHOWN

Prepared for:
Casella Construction
8 US4 East
Mendon VT 05701

DWG NO.
S4.0

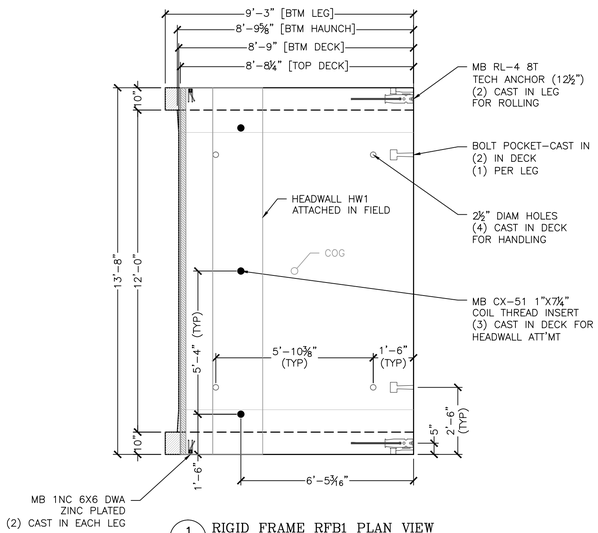

1 S5.0 RIGID FRAME RFB1 PLAN VIEW
⅜" = 1'-0"

RFB1 - 1 REQ'D
ITEM #291208
RFB1: 9.08CY
TOTAL WT: 38,150#

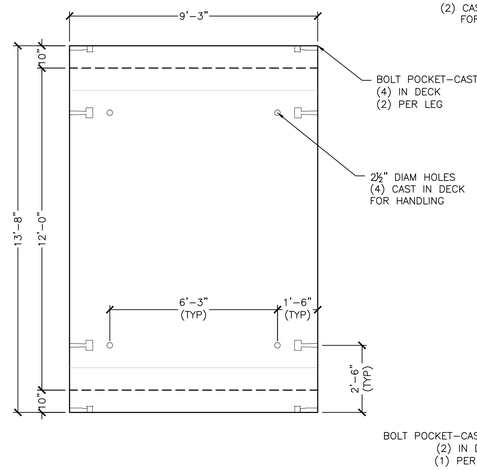

3 S5.0 RIGID FRAME RFB2 PLAN VIEW
⅜" = 1'-0"

RFB2 - 11 REQ'D
ITEM #291208
RFB2: 9.49CY
TOTAL WT: 39,850#

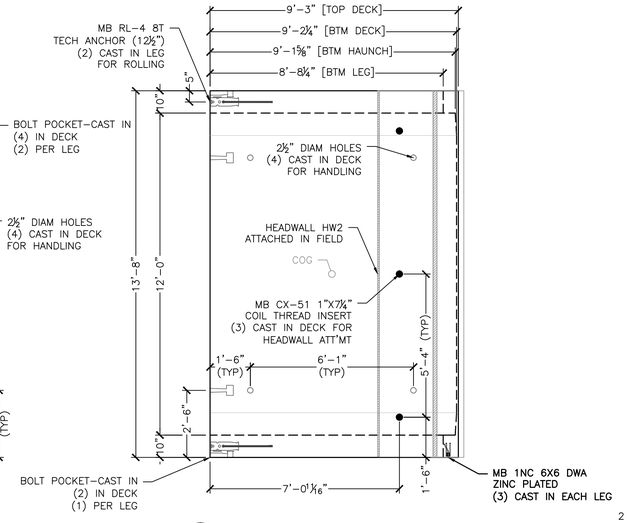

5 S5.0 RIGID FRAME RFB3 PLAN VIEW
⅜" = 1'-0"

RFB3 - 1 REQ'D
ITEM #291208
RFB3: 9.32CY
TOTAL WT: 39,140#

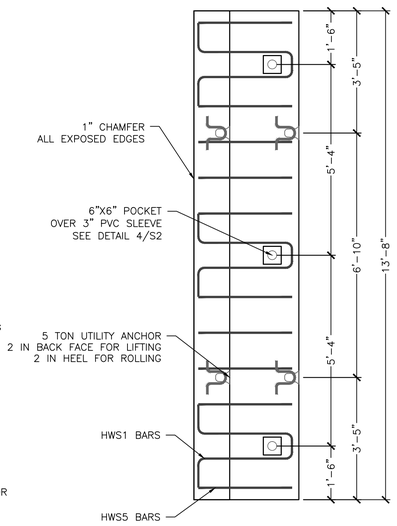

9 S5.0 HEADWALL HW1 PLAN VIEW
½" = 1'-0"

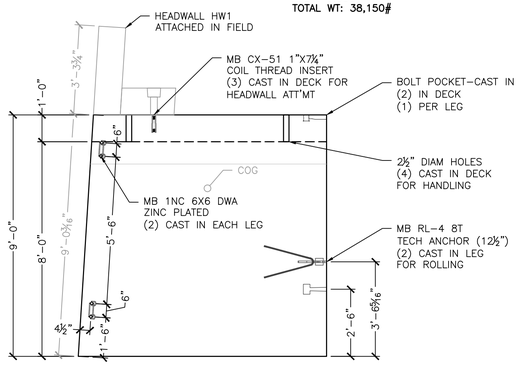

2 S5.0 RIGID FRAME RFB1 ELEVATION
⅜" = 1'-0"

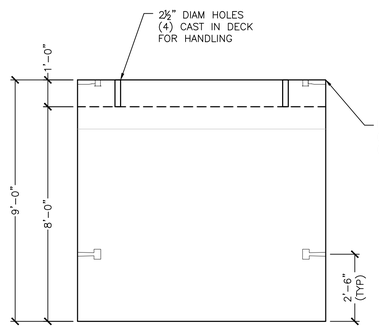

4 S5.0 RIGID FRAME RFB2 ELEVATION
⅜" = 1'-0"

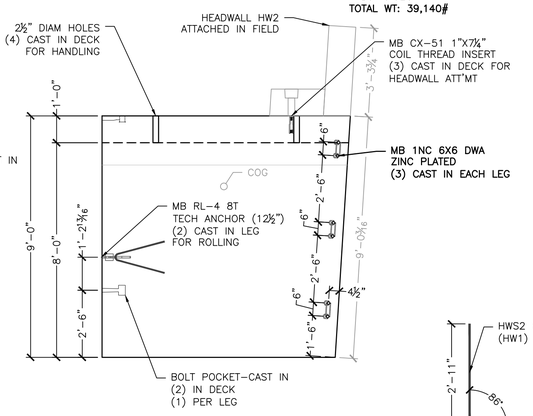

6 S5.0 RIGID FRAME RFB3 ELEVATION
⅜" = 1'-0"

HW1 - 1 REQ'D
HW2 - 1 REQ'D
ITEM #275701
WALL: 1.66CY
HEEL: 1.01CY
TOTAL WT: 11,200#

PRODUCTION NOTE:
HW1 SHOWN, MATCH-CAST TO RFB1
HW2 SIMILAR, MATCH-CAST TO RFB3

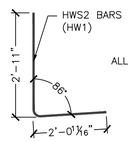

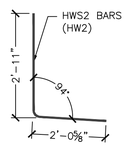

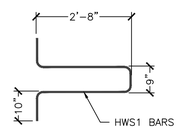

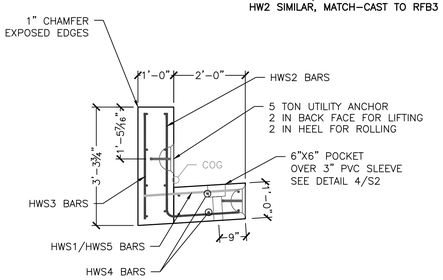

8 S5.0 HW1 REINFORCING SECTION
½" = 1'-0"

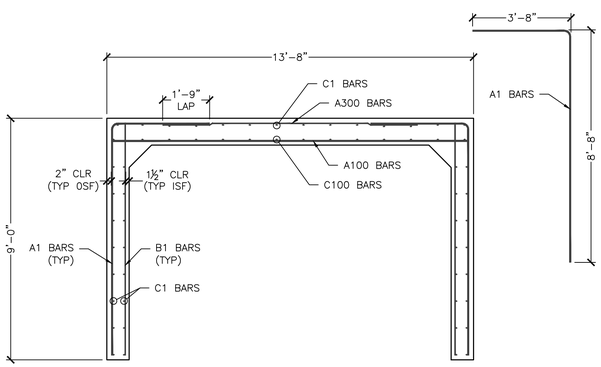

7 S5.0 RFB REINFORCING SECTION
⅜" = 1'-0"

RFB2 REINFORCING SCHEDULE						
LOCATION	MARK	QTY	SIZE	SPACING	TYPE	CUT LENGTH
TOP SLAB (INT)	A100	19	#6	6"	STRAIGHT	13'-4"
TOP SLAB (EXT)	A300	10	#4	12"	STRAIGHT	9'-6"
WALL (EXT)	A1	38	#6	6"	"L" BARS	12'-2⅝"
WALL (INT)	B1	20	#4	12"	STRAIGHT	8'-8"
LONGIT. TOP (EXT)	C1	14	#4	12"	STRAIGHT	8'-11"
LONGIT. TOP (INT)	C100	14	#4	12"	STRAIGHT	8'-11"
LONGIT. WALL	C1	32	#4	12"	STRAIGHT	8'-11"
RFB1 REINFORCING SCHEDULE						
LOCATION	MARK	QTY	SIZE	SPACING	TYPE	CUT LENGTH
TOP SLAB (INT)	A100	18	#6	6"	STRAIGHT	13'-4"
TOP SLAB (EXT)	A300	10	#4	12"	STRAIGHT	9'-6"
WALL (EXT)	A1	*38	#6	6"	"L" BARS	12'-2⅝"
WALL (INT)	B1	*20	#4	12"	STRAIGHT	8'-8"
LONGIT. TOP (EXT)	C1	14	#4	12"	STRAIGHT	8'-4"
LONGIT. TOP (INT)	C100	14	#4	12"	STRAIGHT	8'-5"
LONGIT. WALL	C1	32	#4	12"	STRAIGHT	VARIES 8'-11" TO 8'-4"
RFB3 REINFORCING SCHEDULE						
LOCATION	MARK	QTY	SIZE	SPACING	TYPE	CUT LENGTH
TOP SLAB (INT)	A100	19	#6	6"	STRAIGHT	13'-4"
TOP SLAB (EXT)	A300	10	#4	12"	STRAIGHT	9'-6"
WALL (EXT)	A1	*38	#6	6"	"L" BARS	12'-2⅝"
WALL (INT)	B1	*20	#4	12"	STRAIGHT	8'-8"
LONGIT. TOP (EXT)	C1	14	#4	12"	STRAIGHT	8'-11
LONGIT. TOP (INT)	C100	14	#4	12"	STRAIGHT	8'-10¼"
LONGIT. WALL	C1	32	#4	12"	STRAIGHT	VARIES 8'-11" TO 8'-4"

*SPLAY FINAL BAR ALONG DIAGONAL
MAINTAIN DESIGN SPACING

HEADWALL REINFORCING SCHEDULE					
MARK	QTY	SIZE	SPACING	TYPE	CUT LENGTH
HWS1	3	#4	AS SHOWN	"U"	7'-3"
HWS2	14	#4	12"	"L"	4'-10⅝"
HWS3	14	#4	12"	STR	2'-11⅝"
HWS4	8 WALL 6 FOOT	#4	12"	STR	13'-4"
HWS5	10	#4	12" MAX	STR	2'-8"

No.	Date	Revision	By
1	2/26/2015	Revised per EOR	PJL

MICHIE CORPORATION
173 BUXTON INDUSTRIAL DRIVE, PO BOX 870
HENNIKER, NH 03242
PHONE: 603-428-3218
FAX: 603-428-7426
WWW.MICHIECORP.COM

TH4 over Branch of Mill River - VTAOT STP 1443 (44)
BR No 37 - Shrewsbury, VT

12'-0" x 8'-0" Rigid Frame Bridge
Rigid Frame and Curbwall Details

Project No. 5576
Date: 12/24/2014
Designed by: PJL
Drawn by: PJL
Checked by: CFP
Scale: AS SHOWN

Prepared for:
Casella Construction
8 US4 East
Mendon VT 05701

DWG NO.
S5.0

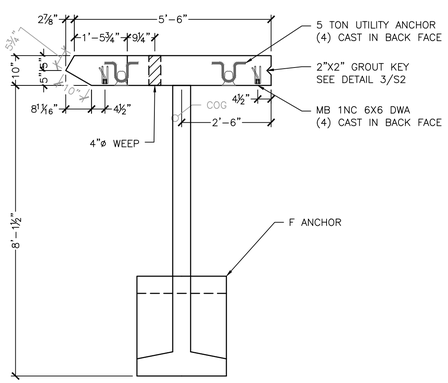

1 S6.0 WINGWALL WW1A PLAN VIEW
½" = 1'-0"

WW1A - 1 REQ'D
ITEM #275602
WALL: 1.95CY
D ANCHOR: 0.68CY
TOTAL WT: 11,050#

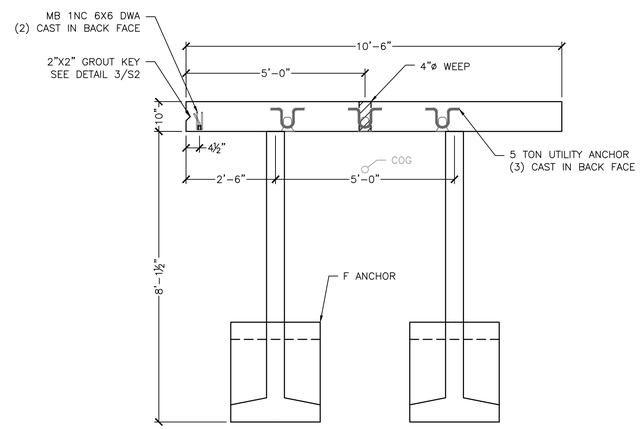

3 S6.0 WINGWALL WW1B PLAN VIEW
½" = 1'-0"

WW1B - 1 REQ'D
ITEM #275602
WALL: 3.15CY
F ANCHOR: 0.68CY/EA
TOTAL WT: 18,940#

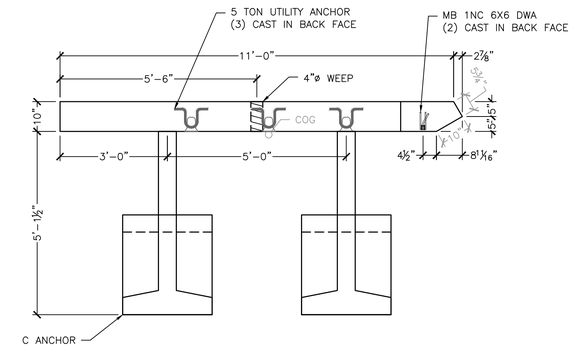

5 S6.0 WINGWALL WW2 PLAN VIEW
½" = 1'-0"

WW2 - 1 REQ'D
ITEM #275602
WALL: 3.37CY
C ANCHOR: 0.48CY/EA
TOTAL WT: 18,190#

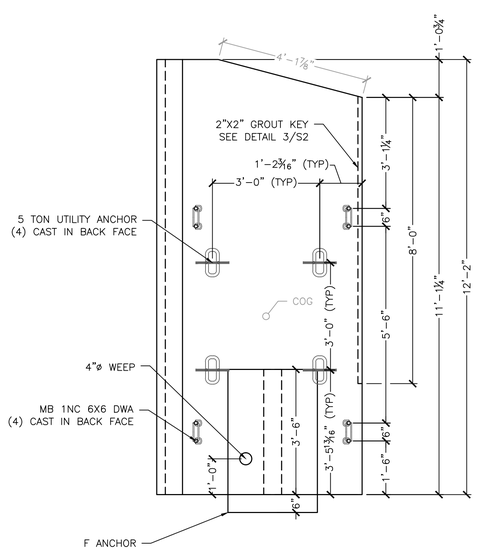

2 S6.0 WINGWALL WW1A ELEVATION VIEW
½" = 1'-0"

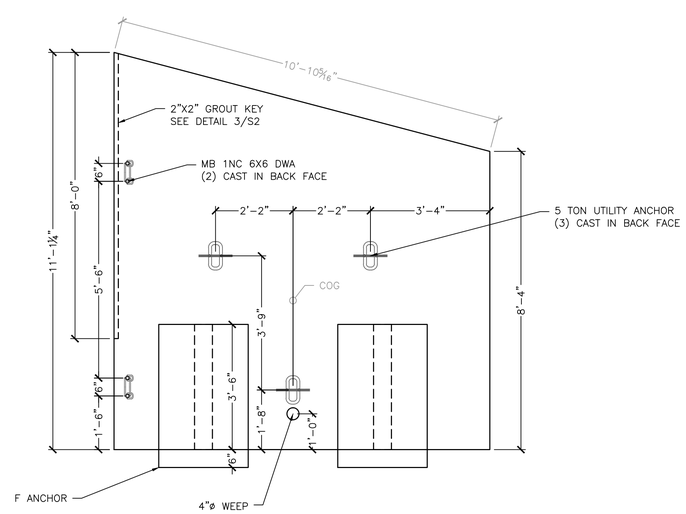

4 S6.0 WINGWALL WW1B ELEVATION VIEW
½" = 1'-0"

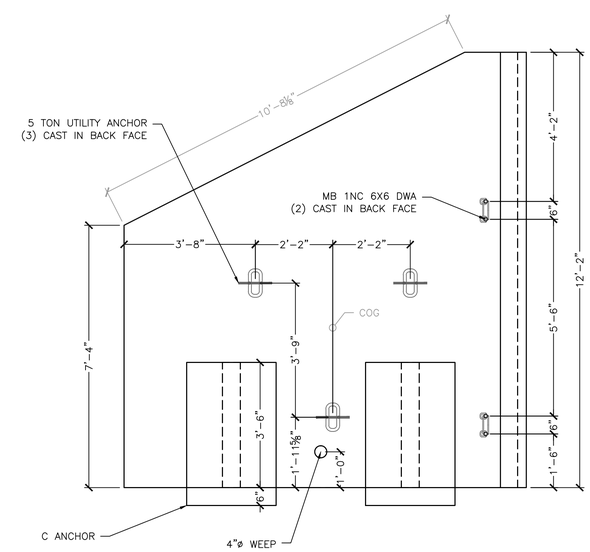

6 S6.0 WINGWALL WW2 ELEVATION VIEW
½" = 1'-0"

No.	Date	Revision	By
1	2/26/2015	Revised per EOR	PJL

MICHIE CORPORATION
173 BUXTON INDUSTRIAL DRIVE - PO BOX 870
HENNIKER, NH 03242
PHONE: 603-428-3218
FAX: 603-428-7426
WWW.MICHIECORP.COM

TH4 over Branch of Mill River - VTAOT STP 1443 (44)
BR No 37 - Shrewsbury, VT

12'-0" x 8'-0" Rigid Frame Bridge
Wigwalls WW1 and WW2 Details

Project No. 5576
Date: 12/24/2014
Designed by: PJL
Drawn by: PJL
Checked by: CFP
Scale: AS SHOWN

Prepared for:
Casella Construction
8 US4 East
Mendon VT 05701

DWG NO.
S6.0

L:\PROJECTS\CASELLA CONSTRUCTION\SHREWSBURY, VT - VTAOT STP 1443 (44)\WIGWALLS\BR 37 & 12'x8' DWGS 2-26-2015.DWG 2/26/2015 4:31 PM

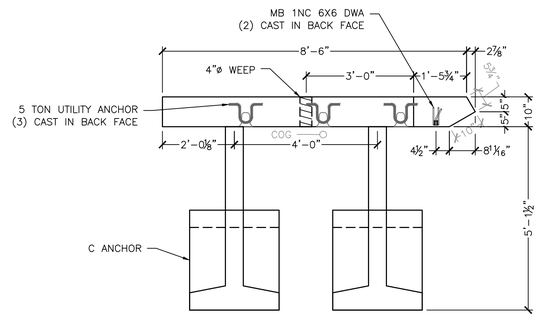

1 S7.0 WINGWALL WW3 PLAN VIEW
½" = 1'-0"

WW3 - 1 REQ'D
ITEM #275602
WALL: 2.51CY
C ANCHOR: 0.48CY/EA
TOTAL WT: 14,580#

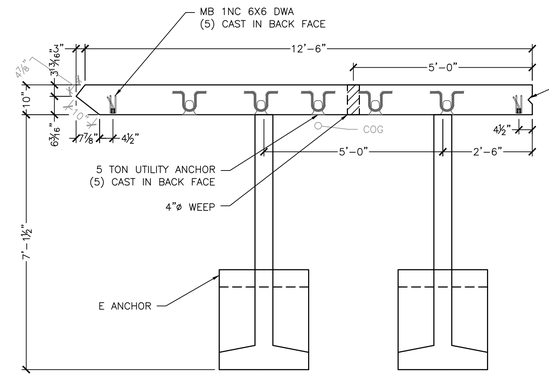

3 S7.0 WINGWALL WW4A PLAN VIEW
½" = 1'-0"

WW4A - 1 REQ'D
ITEM #275602
WALL: 4.66CY
E ANCHOR: 0.61CY/EA
TOTAL WT: 24,700#

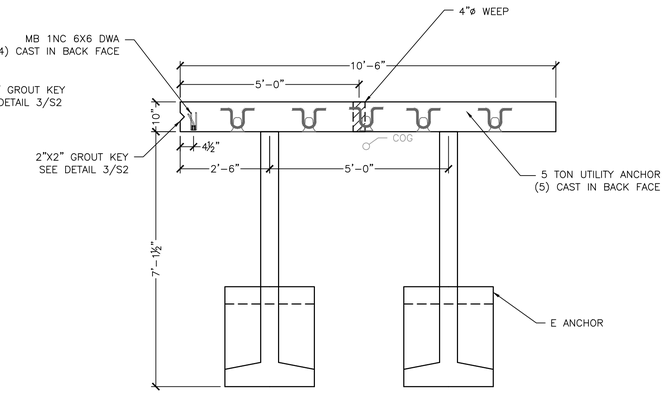

5 S7.0 WINGWALL WW4B PLAN VIEW
½" = 1'-0"

WW4B - 1 REQ'D
ITEM #275602
WALL: 3.94CY
E ANCHOR: 0.61CY/EA
TOTAL WT: 21,670#

NOTE:
USE MIDDLE TWO + BTM LIFTER FOR STRIPPING
USE TOP FOUR LIFTERS FOR SETTING IN FIELD

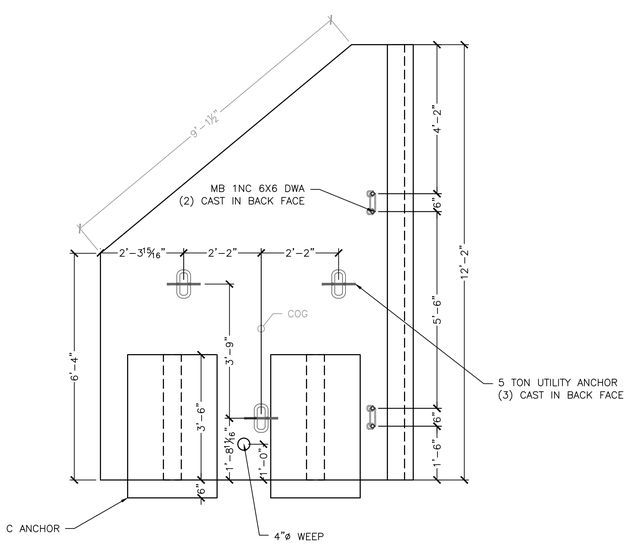

2 S7.0 WINGWALL WW3 ELEVATION VIEW
½" = 1'-0"

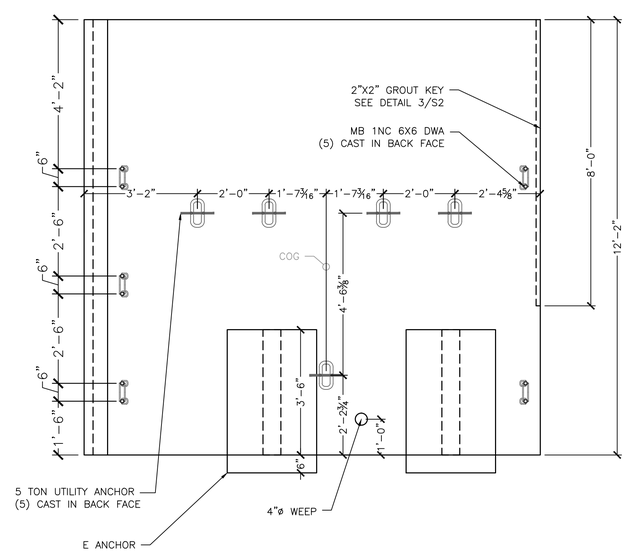

4 S7.0 WINGWALL WW4A ELEVATION VIEW
½" = 1'-0"

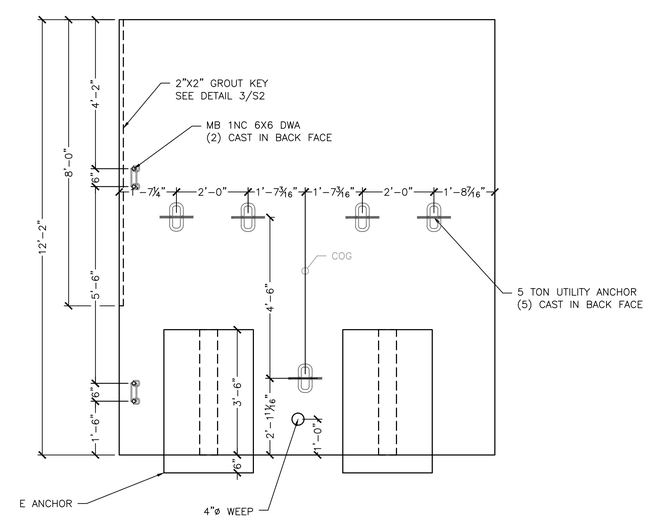

6 S7.0 WINGWALL WW4B ELEVATION VIEW
½" = 1'-0"

No.	Date	Revision	By
1	2/26/2015	Revised per EOR	PJL

MICHIE CORPORATION
173 BUXTON INDUSTRIAL DRIVE - PO BOX 870
HENNIKER, NH 03242
PHONE: 603-428-3218
FAX: 603-428-7426
WWW.MICHIECORP.COM

TH4 over Branch of Mill River - VTAOT STP 1443 (44)
BR No 37 - Shrewsbury, VT

12'-0" x 8'-0" Rigid Frame Bridge
Wigwalls WW3 and WW4 Details

Project No. 5576
Date: 12/24/2014
Designed by: PJL
Drawn by: PJL
Checked by: CFP
Scale: AS SHOWN

Prepared for:
Casella Construction
8 US4 East
Mendon VT 05701

DWG NO.
S7.0

L:\PROJECTS\CASELLA CONSTRUCTION\SHREWSBURY, VT - VTAOT STP 1443 (44)\WIGWALLS\S7.0 1243 CASELLA 5576.DWG 3/10/2015 4:01 PM

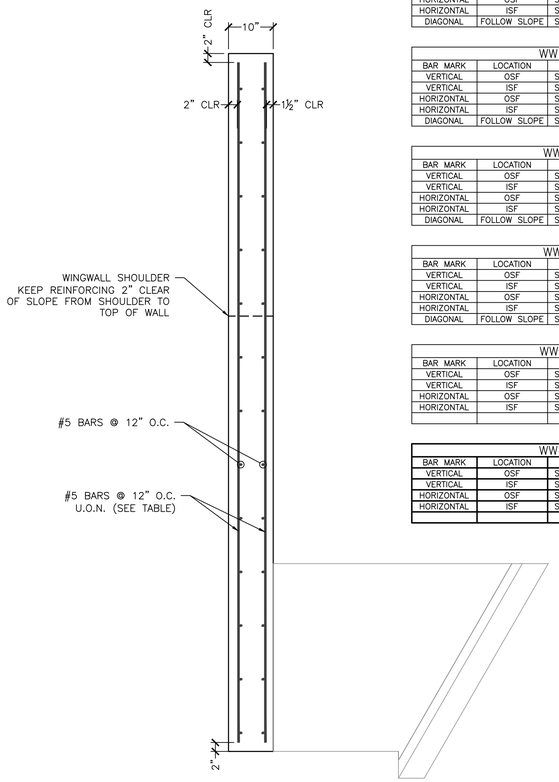

1 / S8.0 WINGWALL REINFORCING (TYP)
NTS

WW1A REINFORCING SCHEDULE					
BAR MARK	LOCATION	TYPE	SIZE/SPACING	CUT LENGTH	# OF PCS
VERTICAL	OSF	STRAIGHT	#5 @ 12"	VARIES 11'-10" TO 10'-10"	6
VERTICAL	ISF	STRAIGHT	#6 @ 8"	VARIES 11'-10" TO 10'-10"	9
HORIZONTAL	OSF	STRAIGHT	#5 @ 12"	5'-3½" LONGEST PIECE	12
HORIZONTAL	ISF	STRAIGHT	#5 @ 12"	5'-0½"	12
DIAGONAL	FOLLOW SLOPE	STRAIGHT	#5	4'-0"	2

WW1B REINFORCING SCHEDULE					
BAR MARK	LOCATION	TYPE	SIZE/SPACING	CUT LENGTH	# OF PCS
VERTICAL	OSF	STRAIGHT	#5 @ 12"	VARIES 10'-10" TO 8'-0"	11
VERTICAL	ISF	STRAIGHT	#6 @ 8"	VARIES 10'-10" TO 8'-0"	16
HORIZONTAL	OSF	STRAIGHT	#5 @ 12"	10'-2"	11
HORIZONTAL	ISF	STRAIGHT	#5 @ 12"	10'-2"	11
DIAGONAL	FOLLOW SLOPE	STRAIGHT	#5	10'-6½"	2

WW2 REINFORCING SCHEDULE					
BAR MARK	LOCATION	TYPE	SIZE/SPACING	CUT LENGTH	# OF PCS
VERTICAL	OSF	STRAIGHT	#5 @ 12"	VARIES 11'-10" TO 7'-0"	11
VERTICAL	ISF	STRAIGHT	#5 @ 12"	VARIES 11'-10" TO 7'-0"	11
HORIZONTAL	OSF	STRAIGHT	#5 @ 12"	10'-9½" LONGEST PIECE	12
HORIZONTAL	ISF	STRAIGHT	#5 @ 12"	10'-6½" LONGEST PIECE	12
DIAGONAL	FOLLOW SLOPE	STRAIGHT	#5	10'-6"	2

WW3 REINFORCING SCHEDULE					
BAR MARK	LOCATION	TYPE	SIZE/SPACING	CUT LENGTH	# OF PCS
VERTICAL	OSF	STRAIGHT	#5 @ 12"	VARIES 11'-10" TO 6'-0"	9
VERTICAL	ISF	STRAIGHT	#5 @ 12"	VARIES 11'-10" TO 6'-0"	8
HORIZONTAL	OSF	STRAIGHT	#5 @ 12"	8'-3½" LONGEST PIECE	12
HORIZONTAL	ISF	STRAIGHT	#5 @ 12"	8'-0½" LONGEST PIECE	12
DIAGONAL	FOLLOW SLOPE	STRAIGHT	#5	9'-0"	2

WW4A REINFORCING SCHEDULE					
BAR MARK	LOCATION	TYPE	SIZE/SPACING	CUT LENGTH	# OF PCS
VERTICAL	OSF	STRAIGHT	#5 @ 12"	11'-10"	13
VERTICAL	ISF	STRAIGHT	#5 @ 12"	11'-10"	12
HORIZONTAL	OSF	STRAIGHT	#5 @ 12"	12'-4" LONGEST PIECE	12
HORIZONTAL	ISF	STRAIGHT	#5 @ 12"	12'-0¼" LONGEST PIECE	12

WW4B REINFORCING SCHEDULE					
BAR MARK	LOCATION	TYPE	SIZE/SPACING	CUT LENGTH	# OF PCS
VERTICAL	OSF	STRAIGHT	#5 @ 12"	11'-10"	11
VERTICAL	ISF	STRAIGHT	#6 @ 12"	11'-10"	11
HORIZONTAL	OSF	STRAIGHT	#5 @ 12"	10'-2"	12
HORIZONTAL	ISF	STRAIGHT	#5 @ 12"	10'-2"	12

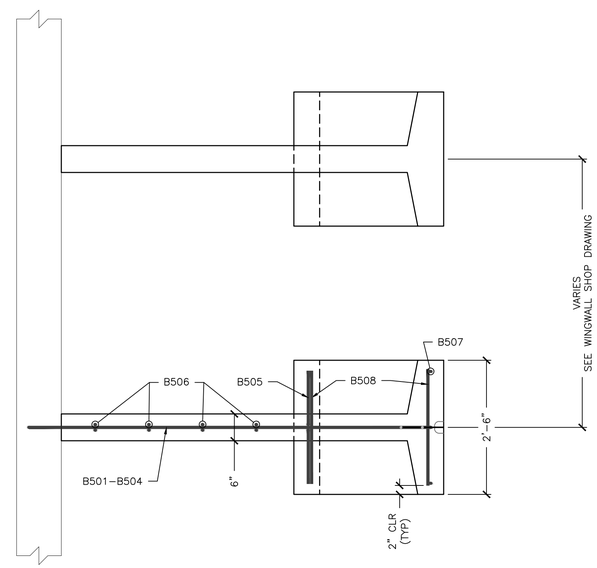

NOTE: REINFORCING SHOWN REPRESENTS "E" ANCHOR
OTHER ANCHOR REINFORCING SIMILAR

4 REQ'D

ANCHOR TYPE "B"					
CONCRETE QUANTITY				0.41 CY	
WEIGHT				1740 LB	
W1				1'-4"	
W2				3'-5⅜"	
X =	2'-2⅛"	Y=	1'-8⅞"		
BAR LIST					
MARK	QTY	SIZE	L	TYPE	LENGTH
B501	1	#5	4'-4½"	1	10'-1½"
B502	1	#5	4'-0½"	1	9'-5"
B503	1	#5	3'-8¼"	1	8'-9"
B504	1	#5	3'-0"	1	7'-4½"
B505	2	#5	3'-8"	2	4'-7"
B506	2	#5	----	STR	3'-2"
B507	4	#5	----	STR	4'-3½"
B508	7	#5	----	STR	2'-2"

4 REQ'D

ANCHOR TYPE "C"					
CONCRETE QUANTITY				0.48 CY	
WEIGHT				2010 LB	
W1				2'-4"	
W2				4'-5⅜"	
X =	2'-8¾"	Y=	1'-8½"		
BAR LIST					
MARK	QTY	SIZE	L	TYPE	LENGTH
B501	1	#5	5'-4½"	1	12'-1½"
B502	1	#5	5'-0½"	1	11'-5"
B503	1	#5	4'-8¼"	1	10'-9"
B504	1	#5	4'-0"	1	9'-4½"
B505	2	#5	3'-8"	2	4'-7"
B506	4	#5	----	STR	3'-2"
B507	4	#5	----	STR	4'-3½"
B508	7	#5	----	STR	2'-2"

ANCHOR TYPE "D"					
CONCRETE QUANTITY				0.54 CY	
WEIGHT				2285 LB	
W1				3'-4"	
W2				5'-5⅜"	
X =	3'-5⅛"	Y=	1'-8½"		
BAR LIST					
MARK	QTY	SIZE	L	TYPE	LENGTH
B501	1	#5	6'-4½"	1	14'-1½"
B502	1	#5	6'-0½"	1	13'-5"
B503	1	#5	5'-8¼"	1	12'-9"
B504	1	#5	5'-0"	1	11'-4½"
B505	2	#5	3'-8"	2	4'-7"
B506	6	#5	----	STR	3'-2"
B507	4	#5	----	STR	4'-3½"
B508	7	#5	----	STR	2'-2"

4 REQ'D

ANCHOR TYPE "E"					
CONCRETE QUANTITY				0.61 CY	
WEIGHT				2550 LB	
W1				4'-4"	
W2				6'-5⅜"	
X =	4'-0"	Y=	1'-8⅝"		
BAR LIST					
MARK	QTY	SIZE	L	TYPE	LENGTH
B501	1	#5	7'-4½"	1	16'-1½"
B502	1	#5	7'-0½"	1	15'-5"
B503	1	#5	6'-8¼"	1	14'-9"
B504	1	#5	6'-0"	1	13'-4½"
B505	2	#5	3'-8"	2	4'-7"
B506	8	#5	----	STR	3'-2"
B507	4	#5	----	STR	4'-3½"
B508	7	#5	----	STR	2'-2"

3 REQ'D

ANCHOR TYPE "F"					
CONCRETE QUANTITY				0.68 CY	
WEIGHT				2860 LB	
W1				5'-4"	
W2				7'-5⅜"	
X =	4'-7⅝"	Y=	1'-8⅝"		
BAR LIST					
MARK	QTY	SIZE	L	TYPE	LENGTH
B501	1	#5	8'-4½"	1	18'-1½"
B502	1	#5	8'-0½"	1	17'-5"
B503	1	#5	7'-8¼"	1	16'-9"
B504	1	#5	7'-0"	1	15'-4½"
B505	2	#5	3'-8"	2	4'-7"
B506	10	#5	----	Str.	3'-2"
B507	4	#5	----	Str.	4'-3½"
B508	7	#5	----	Str.	2'-2"

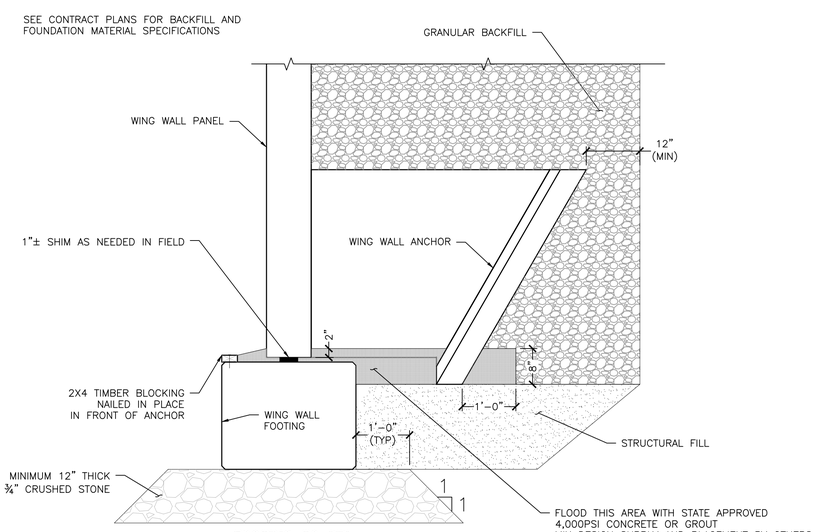

2 / S8.0 FOOTING TO WW ATTACHMENT DETAIL
NTS

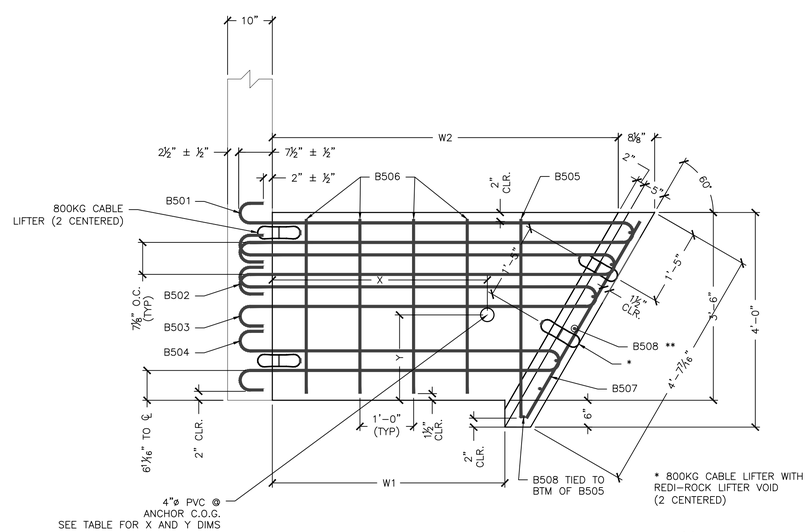

3 / S8.0 ANCHOR DETAIL
¾" = 1'-0"

** PLACE (1) B508 THROUGH EACH HOOP BARS,
(1) CENTERED BETWEEN HOOP BARS 503 & 504, AND
(2) BELOW B504 HOOP BAR W/ BOTTOM B508
2" CLEAR FROM BOTTOM (7 TOTAL)

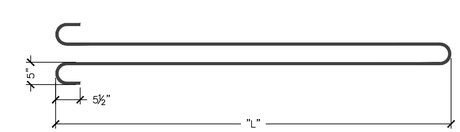

TYPE 1

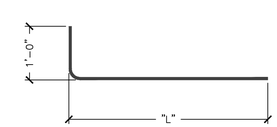

TYPE 2

No.	Date	Revision	By
1	2/26/2015	Revised per EOR	PJL

MICHIE CORPORATION
173 BUXTON INDUSTRIAL DRIVE - PO BOX 870
HENNIKER, NH 03242
PHONE: 603-428-3218
FAX: 603-428-7426
WWW.MICHIECORP.COM

TH4 over Branch of Mill River - VTAOT STP 1443 (44)
BR No 37 - Shrewsbury, VT
12'-0" x 8'-0" Rigid Frame Bridge
Anchor Details

Project No. 5576
Date: 12/24/2014
Designed by: PJL
Drawn by: PJL
Checked by: CFP
Scale: AS SHOWN

Prepared for:
Casella Construction
8 US4 East
Mendon VT 05701

DWG NO.
S8.0

MICHIE CORPORATION
173 BUXTON INDUSTRIAL DRIVE; PO BOX 870
HENNIKER, NH 03242
PHONE: 603-428-3218
FAX: 603-428-7426

LIFTER CAPACITY CHECKS

Re.:

Customer: CASELLA
Project:
Location: SHREWSBURY VT
Project #: 5576
Description:
Proj. Contact:

Date: 3/10/15	Designed by: PJL	Checked by:	Date Checked:

CASE 1 BRIDGE/WINGWALL FOOTINGS

- (4) 5 TON UTILITY ANCHORS. "OXFORD A750-7" CAST IN.
- SAFE WORKING LOAD SWL = 10^K @ 60° SLING ANGLE (4:1 SF)
- HEAVIEST PICK, WWF1

$$\frac{40{,}215 \text{ PICK WT}}{4 \text{ LIFTERS}} = 10054 \text{ LBS/LIFTER}$$

$$\frac{10{,}000}{10{,}054} = 0.995$$ WITHIN 1%, SAY OK.

CASE 2 WINGWALL w/ 2 PICK POINTS / DETACHED HEADWALLS

- (3) 5 TON UTILITY ANCHORS. "OXFORD A750-7" CAST IN.
- (2) ANCHORS @ TOP USED FOR SETTING IN PLACE.
- (3) ANCHORS USED WHEN LIFTING OFF TRAILER → (2) ANCHOR CONDITION CONTROLS.
- SWL 10^K @ 60° SLING (4:1 SF)
- HEAVIEST PICK WW1B

$$\frac{18{,}940\# \text{ PICK WT}}{2 \text{ LIFTERS}} = 9470 \#/\text{LIFTER}$$

$$\frac{10000}{9470} = 1.06 > 1$$ OK

MICHIE CORPORATION
173 BUXTON INDUSTRIAL DRIVE; PO BOX 870
HENNIKER, NH 03242
PHONE: 603-428-3218
FAX: 603-428-7426

LIFTER CAPACITY CHECKS

Re.:

Customer: CASELLA
Project:
Location: SHREWSBURY VT
Project #: 5576
Description:
Proj. Contact:

Date: 3/10/15	Designed by: PJL	Checked by:	Date Checked:

CASE 3 WINGWALL w/ 4 PICK POINTS

- 5TON UTILITY ANCHOR "OXFORD A750-7" CAST IN.
- CONTROLLING CONDITION, (4) ANCHORS @ TOP USED FOR SETTING IN PLACE.
- SWL 10^k @ 60° SLING (4:1 SF).
- HEAVIEST PICK, WW4A.

$$\frac{24{,}700^{\#} \text{ PICK WT}}{4 \text{ LIFTERS}} = 6175^{\#}/\text{LIFTER}$$

$$\frac{10{,}000}{6175} = 1.62 > 1 \quad \underline{\underline{OK}}$$

CASE 4 RIGID FRAME (SETTING IN FIELD)

- (4) $2\frac{1}{2}''\phi$ HOLES - CAST IN DECK.
- MUNCY TEACUP FITTING TC-32 WITH TC-32A 1" SLING AND NB-32 BUTTON.
- CONTROLLING CAPACITY IS 1" SLING - $19{,}000^{\#}$ W/ VERTICAL PICK

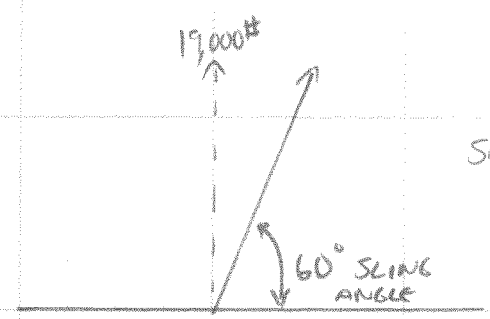

SLING CAPACITY @ 60° = $19^k \sin(60)$

$= 16{,}450^{\#}$

- HEAVIEST PICK, RFB2.

$$\frac{39{,}850^{\#}}{4 \text{ POINTS}} = 9960^{\#} \qquad \frac{16{,}450^{\#}}{9960^{\#}} = 1.65 > 1 \quad \underline{\underline{OK}}$$

MICHIE CORPORATION
173 BUXTON INDUSTRIAL DRIVE; PO BOX 870
HENNIKER, NH 03242
PHONE: 603-428-3218
FAX: 603-428-7426

Re.: LIFTER CAPACITY CHECKS

Customer: CASELLA
Project:
Location: SHREWSBURY VT
Project #: 5576
Description:
Proj. Contact:

Date:	Designed by:	Checked by:	Date Checked:

CASE 5 RIGID FRAME (HANDLING @ PLANT)

- (2) 2½" ø HOLES IN DECK + (2) MB RL-4 TECH ANCHORS IN LEGS
- ASSUME 60° SLING ANGLE
- HANDLED WITH FORKLIFT(S)
- HEAVIEST PICK, RFB2.

$$\frac{39{,}850^{\#}}{4 \text{ POINTS}} = 9960^{\#} \text{ PER PICK POINT.}$$

- 1"ø SLING CHECKED ON CASE 4
- CHECK MB RL-4 TECH ANCHOR @ 60° SLING ANGLE = $16^{K} \sin(60) = 13.86^{K}$

$$\frac{13{,}860^{\#}}{9960^{\#}} = 1.39 > 1 \quad \underline{\underline{OK}}$$

CASELLA 4/6

OXFORD Industrial Technologies, LLC

PO Box 736 • Stevenson, CT 06491
www.oxfordtechusa.com
Phone: (203) 268-6030
Fax: (203) 445-1240
info@oxfordtechusa.com

Oxford Lift System®

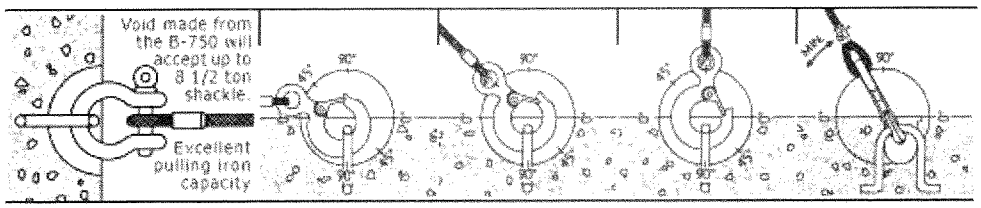

Anchor Product Code	Slab Min. Inches	Safe Working Load @ 90 degree Shear-0 degree Pull	Safe Working Load @ 90 degree Shear-45 degree Pull	Safe Working Load @ 90 degree Tension-90 degree Pull	Safe Working Load @ 90 degree Shear-60 degree Pull
A 500-3	4.00"	4,500	4,000	3,500	4,000
A 500-4	5.00"	8,000	5,500	4,000	5,000
A 500-5	6.00"	10,500	6,500	5,000	5,500
A 750-5	6.00"	12,500	8,000	7,000	7,000
A 750-7	8.00"	15,000	12,500	10,000	10,000

Note: Safe Working Load provides a factor of safety of approximately 4:1
Test Results are based on a minimum concrete compressive strength of 4,000 psi.

<back next>

Home | B-500 & B-750 | S-150 | S-300 | Lift Anchor & Order Form | Concrete Products
Pull Iron Capacity | Anchors & Accessories | Toggle-Lok | Insert/Lift Anchor | Grid-Lok/ Rebar Chair | Helpful Calculations

CASELLA 5/6

Muncy™ Teacup Fittings

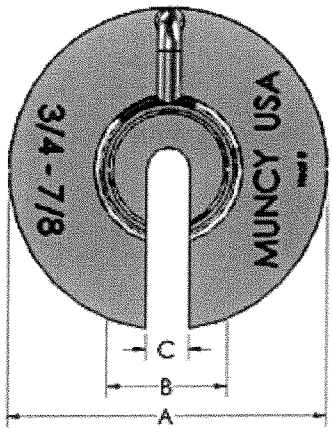

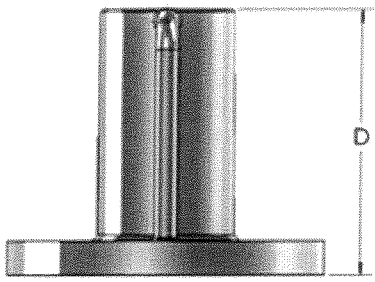

- An efficient way to handle concrete pipes
- Light weight design
- Available with 7" and 12" diameter flanges.
- To be used with our special Muncy™ Machine NB Buttons

Stock No.	Rope Size	Dimensions					Use With Muncy Button
		A	B	C	D	Weight	
TC-24	3/4" - 7/8"	7.00	2.50	0.938	5.75	9.5 lbs	NB-24, NB-28
TC-32	1" - 1-1/8"	7.00	2.50	1.250	5.75	9.5 lbs	NB-32, NB-36
TC-40	1-1/4"	7.00	3.00	1.375	5.75	10 lbs	NB-40

Stock No.	Rope Size	Dimensions					Use With Muncy Button
		A	B	C	D	Weight	
TC-24A	3/4" - 7/8"	12.00	2.50	0.938	5.75	26 lbs	NB-24, NB-28
TC-32A	1" - 1-1/8"	12.00	2.50	1.250	5.75	26 lbs	NB-32, NB-36
TC-40A	1-1/4"	12.00	3.00	1.375	5.75	27 lbs	NB-40

RATED CAPACITY

TC-24 / TC-24A	TC-32 / TC-32A	TC-40 / TC-40A
¾" – 10,864-LBS WLL	1" – 19,012-LBS WLL	1-1/4" – 29,100-LBS WLL
7/8" – 14,744-LBS WLL	1-1/8" – 23,280-LBS WLL	

CASELLA 6/6

Rapid Lift System Anchors

(6015) RL-4 RAPID LIFT TECH ERECTION ANCHOR WITH SHEAR PLATE
STD: 2-Ton, 4-Ton and 8-Ton High Capacity: 2.5-Ton, 5-Ton and 10-Ton

The RL-4 Tech Erection Anchor with Plate is similar in design and use to the RL-3 Tech Erection Anchor, but has the added shear plate to eliminate the need for a shear bar. This design feature gives the anchor a smaller height envelope allowing it to be used in thinner concrete panels. This anchor is available in the sizes shown in the table and in plain or hot dip galvanize finish.

See Ring Clutches on page 46, 47, and 48, the Recessing Members on 49, 50 and 51, and the Tension Bars on page 38.

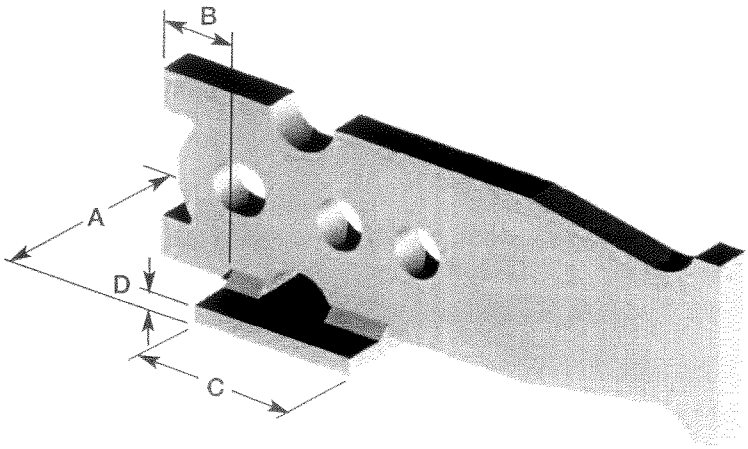

RL-4 TECH ERECTION ANCHOR WITH PLATE									
Ring Clutch System	Clutch I.D.	Item Number Standard	Item Number High Capacity	A	B	C	D	Weight (lbs)	Minimum Panel Thickness
2T/2.5T	2.5T	79527SP	79527SPHC	2 1/2"	3/4"	3"	1/4"	2.12	3 1/2"
4T/5T	5T	79548SP	79548SPHC	2 1/2"	1 1/4"	3"	3/8"	4.93	4"
8T/10T	10T	79589SP	79589SPHC	3"	1 5/8"	3 1/2"	3/8"	10.33	7"

See Standard RL-3 Tech Erection Anchor for all other dimensions.

RL-4 2-TON, 4-TON, 8-TON								Standard	High Capacity
Ring Clutch System	Clutch I.D.	Item Number Standard	Item Number High Capacity	Panel Thickness in Inches	SHEAR 2.66:1 Safety Factor (lbs)	SHEAR 4:1 Safety Factor (lbs)	TENSION w/o Tension Bar 4:1 Safety Factor (lbs)	TENSION w/ Tension Bar 4:1 Safety Factor (lbs)	TENSION w/ Tension Bar 4:1 Safety Factor (lbs)
2T/2.5T	2.5T	79527SP	79527SPHC	3 1/2" min.	2150	1430	2640	4000	5000
2T/2.5T	2.5T	79527SP	79527SPHC	4"	2930	1950	3190	4000	5000
2T/2.5T	2.5T	79527SP	79527SPHC	4 1/2"	3040	2020	3550	4000	5000
2T/2.5T	2.5T	79527SP	79527SPHC	5"	3160	2100	3900	4000	5000
4T/5T	5T	79548SP	79548SPHC	4" min.	2710	1800	3400	8000	10,000
4T/5T	5T	79548SP	79548SPHC	4 1/2"	3710	2470	3860	8000	10,000
4T/5T	5T	79548SP	79548SPHC	5"	4000	2660	4730	8000	10,000
4T/5T	5T	79548SP	79548SPHC	5 1/2"	4160	2770	4970	8000	10,000
4T/5T	5T	79548SP	79548SPHC	6"	4290	2860	5170	8000	10,000
8T/10T	10T	79589SP	79589SPHC	7" min.	6030	4010	7100	16,000	20,000
8T/10T	10T	79589SP	79589SPHC	7 1/2"	6030	4010	7220	16,000	20,000
8T/10T	10T	79589SP	79589SPHC	8"	6030	4010	7690	16,000	20,000

Table is based on dead load only, 150 PCF and a standard concrete compressive strength of 3,500 psi.

1) The 2.66:1 safety factor is commonly used for back stripping operations. Increased safety factor may be required for unusual live loads or cable magnification.

2) Given full embedment, reinforcement and minimum compressive strength concrete; Tech Erection Anchors should achieve a pull out strength equal to their ultimate mechanical strength.

To order, specify: quantity, name, item number and finish.