casella CONSTRUCTION INC.
SITE DEVELOPMENT, EXCAVATION, DEMOLITION
WATER AND SEWER SYSTEMS
AGGREGATE OPERATIONS

Solid Waste Management
Landfill Sitework and Closures
8 U.S. ROUTE 4 EAST, MENDON, VERMONT 05701 802/773-0052
FAX 802/747-7992

Submittal

To: State of Vermont Agency of Transportation
Southwest Regional Construction Office
61 Valley View
Mendon, VT 05701

Date: March 2, 2015
Project: Shrewsbury STP 1443 (44)

Contract: Shrewsbury STP 1443 (44)

Attention: Carolyn Carlson

From: Jeff Chase

Copies	Submittal Number	Specification Section	Description
Electronic	1.1	540.10	Precast Concrete Structure - Resubmittal

Contractors Review and Comments

Reviewed By: Jeff Chase

Comments: Re-Submittal contains plans and calculations for the 12' X 8' Rigid Frame, Footings, Wingwalls, and Headwalls.

Engineers Review Stamp and Comments

DESIGN COMPUTATIONS FOR

VAOT Project STP 1443 (44)
Bridge No. 37
12’ x 8’ 3-Sided Culvert with Wingwalls
Shrewsbury, VT

PREPARED BY:

Michie Corporation
PO Box 870
Henniker, New Hampshire 03242

REVIEWED BY:

DELTA
ENGINEERS, ARCHITECTS, & LAND SURVEYORS
860 Hooper Road, Endwell, New York 13760
TEL: 607-231-6600 FAX: 607-231-6650
EMAIL: precast@deltaengineers.com
www.deltaengineers.com

STATE OF VERMONT
DARYL D. BURNS
No. 9031
Structural I
LICENSED
PROFESSIONAL ENGINEER

3/2/15

MICHIE CORPORATION

WHITE MOUNTAIN PRECAST LLC
Serving All Your Precast Bridge Needs

173 Buxton Industrial Drive • PO Box 870 • Henniker, NH 03242 • Tel: 603.428.3218 • 800.322.6949 • Fax: 603.428.7426

DESIGN CALCULATIONS
12'-0" x 8'-0" Rigid Frame Bridge
Precast Bridge Footings
Precast Headwalls
Precast Wingwalls
Precast Wingwall Footings

Prepared For:
Casella Construction
8 US Route 4 East
Mendon VT 05701

Project Information:
VT AOT STP 1443 (44)
Bridge #37 TH4 over Branch of Mill River
Shrewsbury, VT

Michie Project No: 5576

Delta 2015.059.003 Chk: KLS

Project: Shrewsbury STP 1443 (44)
Task   : 12x8 RFB
Client : Casella Construction
Job No.: 5576
Agency : None

CULVERT PROPERTIES
==========
Type of Culvert: Precast Specification : LRFD 6th Edition 2012
Operating Mode : DESIGN

Physical Dimensions

No. of Boxes: 1 Name: ThreeSidedCulvert
Clear Span : 12.0000 ft
Clear Height: 8.0000 ft Skew Angle : 7.00 deg
Length   : 9.2500 ft Bottom Slab Support: No Bottom Slab, Pinned Supports
Fill Depth Range: Maximum : 16.00 ft Minimum : 14.00 ft Increment : 1.00 ft
Haunches:Top: 10.0000 in Bottom : 0.0000 in
Minimum Thicknesses: Top Slab: 12.0000 in Bot Slab: 0.0000 in
  Ext Wall: 10.0000 in

Material Properties

Concrete: Strength,f'c : 5.000 ksi Density : 0.150 kcf Elasticity,Ec: 4287 ksi
          Type : Normal Weight
          Fr Factor : 0.24 Gamma1 : 1.20 Gamma3 : 0.67
Steel: Yield,fy : 60.00 ksi Allow Stress: 24.00 ksi Elasticity,Es: 29000 ksi
          Yield,fyv : 60.00 ksi Diameter : 1.000 in Type : Rebar
Soil: Density : 0.140 kcf Slope Factor: 1.150 (Granular)
          Fe Factor : 1.150 (Maximum for Compacted Fill)
Serviceability, Gamma-e: 0.75

Loads

Live Load: Vehicle: HL-93

Axle No.	Weight(k)	Dist. From Previous(ft)
1	8.00	0.00
2	32.00	14.00
3	32.00	14.00

Gage Width: 6.00 ft, Tread Width: 20.00 in, Tread Length: 10.00 in
Include Tandem: yes
Tandem: Axle 1: 25.00 k, Axle 2: 25.00 k, Axle Spacing: 4.00 ft
Lane Load: 0.64 klf, P-Moment: 0.00 k, P-Shear: 0.00 k
Combine: Truck + Lane Or Tandem + Lane
Include Lane Load : no Max. No. of Lanes: Computed by Program
Override MPF : no
Traffic Direction** : Lanes Parallel to Main Reinforcement
Neglect Live Load for Large Fill Depths: yes
Apply Surcharge at Fill Depths > 2 ft : yes
Compute Surcharge Depth: yes
Dead Load: Future Wearing Surface : 0.04 klf Add. Dead Load : 0.00 klf
Concentrated Loads : none
Lateral Soil Loads: Max. Equiv. Fluid Press.: 70.00 pcf Min. Equiv. Fluid Press. : 35.00 pcf
Fluid Pressures : Use Int. Water Press. : no

Load and Resistance Factors

	Max	Min
DC:	1.250	0.900
DW:	1.500	0.650
EV:	1.300	0.900
EH:	1.350	0.900
WA:	1.000	

LL I : 1.750 LL II : 1.350
Ductility: 1.000 Importance: 1.000 Redundancy, DL: 1.000 Redundancy, LL: 1.000
Condition: 1.000 System : 1.000
Phi Shear: 0.900 Phi Moment: 0.950 PM Compression: 0.750 PM Tension : 0.900

Reinforcement

Reinforcement Covers : Exterior Interior
Top Slab: 2.0000 in 1.5000 in
Walls : 2.0000 in 1.5000 in

Design Options

Member Thick.: Top Slab : Fixed Bottom Slab: Variable
Ext. Wall: Variable
LL Analysis : Automatically Set Traffic Direction to Account for Skew Effects: yes (**Will override previo
Limit Distribution Width to Culvert Length for Fills < 2 ft: yes

```
               Limit Distribution Width to Culvert Length for Fills > 2 ft: no
               Combine Axle Overlaps for Fills > 2 ft: yes
               Override DLA: no
               Axle Placement Increment for Moving Load Analysis: 20
               Always Distribute Wheel Load: no
Reinforcement: Always Include Distribution Steel: no
               User Defined Longitudinal Steel: no, Follow Specification
               Max. As used in Vc Calcs: 2.00 in2/ft
Slenderness  : Checked       K Factor: 2.00
Modeling     : Use Haunches in the Structural Model: yes
               Left Node on Rollers for 3-Sided Frames: no
Crit. Section: Consider Haunches when Selecting Critical Section Locations: yes
               Extend Critical Section for Shear Beyond the End of the Haunch: yes
               Use Max. Moment with Max. Shear at the Critical Section for Shear: no
Flexure      : Ignore Axial Thrust: no
               Use Pipe Equation: no
Shear        : Always Check Iterative Beta Method
Misc. Options: Use Strength II: no
Live Load Deflection Criteria: 1/800
```

DESIGN RESULTS
==========

Top Slab Thickness = 12.00 in
Bottom Slab Thickness = 0.00 in (from fill depth of 0.00 ft)
Exterior Wall Thickness = 10.00 in (from fill depth of 14.00 ft)

Modular Ratio (N) = 6.76 Max. Steel Ratio = 0.025
Design Span = 12.83 ft Design Height = 8.50 ft

Volume of Concrete: 1.026 cy/ft Weight of Steel: 181 lb/ft

Reinforcing Steel Schedule

Location	Bar Mark	Qty	Size	Type	Spacing (in)	As,prv (in2/ft)	As,rqd (in2/ft)	Length (ft-in)	Wgt (lbs)	H Leg (ft-in)	V Leg (ft-in)	Fill (ft)
Top Slab (int)	A100 (AS2)	19	6	STR	6.00	0.880	0.779	13- 3	377			16.00
Top Slab (ext)	A300 (AS7)	10	4	STR	12.00	0.200	0.144	13- 3	90			14.00
Corner (Top)	A1 (AS1)	38	6	L-BAR	6.00	0.880	0.755	9- 5	536	3- 8	5- 9	14.00
Ext Wall (int)	B1 (AS4)	20	4	STR	12.00	0.200	0.144	8- 6	116			14.00
Ext Wall (ext)	B2 (AS1)	38	4	STR	6.00	0.400	0.262	8- 0	207			14.00
Top Slab (int- 1)	C100 (AS5)	13	4	STR	12.00	0.200	0.144	9- 2	81			14.00
Temperature (1)	C1 (AS6)	13	4	STR	12.00	0.200	0.144	9- 2	81			14.00
Temperature (1)	C1 (AS6)	18	4	STR	12.00	0.200	0.144	9- 2	112			14.00
Temperature (1)	C1 (AS6)	18	4	STR	12.00	0.200	0.144	9- 2	112			14.00
								Total	1713			

Note: A denotes flexural steel, B denotes vertical steel, C denotes longitudinal steel

Splice Lengths Table

Bar Mark	Size	Splice Length (ft-in)
B1	4	1- 9
C1	4	1- 9
C100	4	1- 9

>>>Warning: This is a three sided culvert, therefore foundation has not been design by this program. Engineer should design the foundation. This program output reflects final service load conditions only. Handling, shipping and erection stresses are neither checked nor incorporated into program design and must be analyzed by the producer's engineer. External bracing is an acceptable method to mitigate overstress and possible product damage during the course of handling, shipping and erection.

Delta 2015.059.003 Chk: KLS

DESIGN RESULTS (Fill Depth = 14.00 ft)
==========

Pinned Reactions Applied to Structure: (service load values, k/unit width) (Fill Depth = 14.00 ft)

```
                          ___________
                         |           |
                         |           |
                         |           |
                         |           |
                    ---->|           |<----
                         A           A
                         |           |
                         |           |
```

	Vertical	Horizontal
DC	2.03	0.17
DW	0.24	0.04
EV	14.46	2.53
EH	0.00	-5.31
LS	0.00	0.00
WA	0.00	0.00
LL	0.00	0.00
Without LL	0.00	0.00
With LL	0.00	0.00

Note: Reactions as shown - positive

Load Parameters:

Fe = 1.15 Surcharge Depth : -1.00 ft

Applied Horizontal Loads: (k/ft)

Load Description	Bottom of Wall	Top of Wall
Horizontal Earth Load	1.610	1.015
Live Load Surcharge	0.000	0.000
Internal Water Pressure	0.000	0.000

Unfactored Moments due to All Loads: (k-ft) (Fill Depth = 14.00 ft)

M-PT	Mdc	Mev	Mdw	Meh	Mls	Mwa	Mll+	Mll-
Member 1: (Exterior Wall)								
Bottom								
1- 0	0.00	0.00	0.00	0.00	0.00	0.00	0.00	0.00
1- 1	-0.14	-2.15	-0.04	3.94	0.00	0.00	0.00	0.00
1- 2	-0.29	-4.30	-0.07	6.76	0.00	0.00	0.00	0.00
1- 3	-0.43	-6.46	-0.11	8.51	0.00	0.00	0.00	0.00
1- 4	-0.57	-8.61	-0.15	9.21	0.00	0.00	0.00	0.00
1- 5	-0.72	-10.76	-0.18	8.93	0.00	0.00	0.00	0.00
1- 6	-0.86	-12.91	-0.22	7.70	0.00	0.00	0.00	0.00
1- 7	-1.00	-15.06	-0.25	5.57	0.00	0.00	0.00	0.00
1- 8	-1.15	-17.22	-0.29	2.57	0.00	0.00	0.00	0.00
1- 9	-1.29	-19.37	-0.33	-1.25	0.00	0.00	0.00	0.00
1-10	-1.43	-21.52	-0.36	-5.84	0.00	0.00	0.00	0.00
Top								
Member 2: (Top Slab)								
Left								
2- 0	-1.43	-21.52	-0.36	-5.84	0.00	0.00	0.00	0.00
2- 1	-0.32	-4.81	-0.08	-5.84	0.00	0.00	0.00	0.00
2- 2	0.54	8.18	0.14	-5.84	0.00	0.00	0.00	0.00
2- 3	1.16	17.46	0.29	-5.84	0.00	0.00	0.00	0.00
2- 4	1.53	23.03	0.39	-5.84	0.00	0.00	0.00	0.00
2- 5	1.66	24.88	0.42	-5.84	0.00	0.00	0.00	0.00
2- 6	1.53	23.03	0.39	-5.84	0.00	0.00	0.00	0.00
2- 7	1.16	17.46	0.29	-5.84	0.00	0.00	0.00	0.00
2- 8	0.54	8.18	0.14	-5.84	0.00	0.00	0.00	0.00
2- 9	-0.32	-4.81	-0.08	-5.84	0.00	0.00	0.00	0.00
2-10	-1.43	-21.52	-0.36	-5.84	0.00	0.00	0.00	0.00
Right								

Unfactored Shears due to All Loads: (k) (Fill Depth = 14.00 ft)

M-PT	Vdc	Vev	Vdw	Veh	Vls	Vwa	Vll+	Vll-
Member 1: (Exterior Wall)								
Bottom								
1- 0	-0.17	-2.53	-0.04	5.31	0.00	0.00	0.00	0.00

1- 1	-0.17	-2.53	-0.04	3.97	0.00	0.00	0.00	0.00
1- 2	-0.17	-2.53	-0.04	2.68	0.00	0.00	0.00	0.00
1- 3	-0.17	-2.53	-0.04	1.43	0.00	0.00	0.00	0.00
1- 4	-0.17	-2.53	-0.04	0.24	0.00	0.00	0.00	0.00
1- 5	-0.17	-2.53	-0.04	-0.90	0.00	0.00	0.00	0.00
1- 6	-0.17	-2.53	-0.04	-1.99	0.00	0.00	0.00	0.00
1- 7	-0.17	-2.53	-0.04	-3.03	0.00	0.00	0.00	0.00
1- 8	-0.17	-2.53	-0.04	-4.02	0.00	0.00	0.00	0.00
1- 9	-0.17	-2.53	-0.04	-4.96	0.00	0.00	0.00	0.00
1-10	-0.17	-2.53	-0.04	-5.84	0.00	0.00	0.00	0.00

Top

Member 2: (Top Slab)
Left

2- 0	0.96	14.46	0.24	0.00	0.00	0.00	0.00	0.00
2- 1	0.77	11.57	0.20	0.00	0.00	0.00	0.00	0.00
2- 2	0.58	8.68	0.15	0.00	0.00	0.00	0.00	0.00
2- 3	0.39	5.79	0.10	0.00	0.00	0.00	0.00	0.00
2- 4	0.19	2.89	0.05	0.00	0.00	0.00	0.00	0.00
2- 5	0.00	0.00	0.00	0.00	0.00	0.00	0.00	0.00
2- 6	-0.19	-2.89	-0.05	0.00	0.00	0.00	0.00	0.00
2- 7	-0.39	-5.79	-0.10	0.00	0.00	0.00	0.00	0.00
2- 8	-0.58	-8.68	-0.15	0.00	0.00	0.00	0.00	0.00
2- 9	-0.77	-11.57	-0.20	0.00	0.00	0.00	0.00	0.00
2-10	-0.96	-14.46	-0.24	0.00	0.00	0.00	0.00	0.00

Right

Unfactored Thrusts due to All Loads: (k) (Fill Depth = 14.00 ft)

M-PT	Pdc	Pev	Pdw	Peh	Pls	Pwa	Pll+	PVll-

Member 1: (Exterior Wall)
Bottom

1- 0	-0.96	-14.46	-0.24	0.00	0.00	0.00	0.00	0.00
1- 1	-0.96	-14.46	-0.24	0.00	0.00	0.00	0.00	0.00
1- 2	-0.96	-14.46	-0.24	0.00	0.00	0.00	0.00	0.00
1- 3	-0.96	-14.46	-0.24	0.00	0.00	0.00	0.00	0.00
1- 4	-0.96	-14.46	-0.24	0.00	0.00	0.00	0.00	0.00
1- 5	-0.96	-14.46	-0.24	0.00	0.00	0.00	0.00	0.00
1- 6	-0.96	-14.46	-0.24	0.00	0.00	0.00	0.00	0.00
1- 7	-0.96	-14.46	-0.24	0.00	0.00	0.00	0.00	0.00
1- 8	-0.96	-14.46	-0.24	0.00	0.00	0.00	0.00	0.00
1- 9	-0.96	-14.46	-0.24	0.00	0.00	0.00	0.00	0.00
1-10	-0.96	-14.46	-0.24	0.00	0.00	0.00	0.00	0.00

Top

Member 2: (Top Slab)
Left

2- 0	-0.17	-2.53	-0.04	-5.84	0.00	0.00	0.00	0.00
2- 1	-0.17	-2.53	-0.04	-5.84	0.00	0.00	0.00	0.00
2- 2	-0.17	-2.53	-0.04	-5.84	0.00	0.00	0.00	0.00
2- 3	-0.17	-2.53	-0.04	-5.84	0.00	0.00	0.00	0.00
2- 4	-0.17	-2.53	-0.04	-5.84	0.00	0.00	0.00	0.00
2- 5	-0.17	-2.53	-0.04	-5.84	0.00	0.00	0.00	0.00
2- 6	-0.17	-2.53	-0.04	-5.84	0.00	0.00	0.00	0.00
2- 7	-0.17	-2.53	-0.04	-5.84	0.00	0.00	0.00	0.00
2- 8	-0.17	-2.53	-0.04	-5.84	0.00	0.00	0.00	0.00
2- 9	-0.17	-2.53	-0.04	-5.84	0.00	0.00	0.00	0.00
2-10	-0.17	-2.53	-0.04	-5.84	0.00	0.00	0.00	0.00

Right

Live Load Parameters: Traffic Direction is Parallel to Main Reinforcement
---

Vehicle	Axle No.	Weight (k/ft)	Length (ft)	Dist. From Previous (ft)

All Vehicles:
Distribution Width: 0.00 ft
Impact Factor : 0.00
Lane:
Lane Load : 0.000 k/ft Distribution Width: 0.00 ft

Unfactored Moments and Shears due to Live Loads: (k-ft, k) (Fill Depth = 14.00 ft)

	Truck				Tandem				Lane			
M-PT	Mll+	Mll-	Vll+	Vll-	Mll+	Mll-	Vll+	Vll-	Mll+	Mll-	Vll+	Vll-

Member 1: (Exterior Wall)
Bottom

1- 0	0.00	0.00	0.00	0.00	0.00	0.00	0.00	0.00	0.00	0.00	0.00	0.00
1- 1	0.00	0.00	0.00	0.00	0.00	0.00	0.00	0.00	0.00	0.00	0.00	0.00
1- 2	0.00	0.00	0.00	0.00	0.00	0.00	0.00	0.00	0.00	0.00	0.00	0.00

Delta 2015.059.003 Chk: KLS

1- 3	0.00	0.00	0.00	0.00	0.00	0.00	0.00	0.00	0.00	0.00	0.00	0.00
1- 4	0.00	0.00	0.00	0.00	0.00	0.00	0.00	0.00	0.00	0.00	0.00	0.00
1- 5	0.00	0.00	0.00	0.00	0.00	0.00	0.00	0.00	0.00	0.00	0.00	0.00
1- 6	0.00	0.00	0.00	0.00	0.00	0.00	0.00	0.00	0.00	0.00	0.00	0.00
1- 7	0.00	0.00	0.00	0.00	0.00	0.00	0.00	0.00	0.00	0.00	0.00	0.00
1- 8	0.00	0.00	0.00	0.00	0.00	0.00	0.00	0.00	0.00	0.00	0.00	0.00
1- 9	0.00	0.00	0.00	0.00	0.00	0.00	0.00	0.00	0.00	0.00	0.00	0.00
1-10	0.00	0.00	0.00	0.00	0.00	0.00	0.00	0.00	0.00	0.00	0.00	0.00

Top

Member 2: (Top Slab)

Left

2- 0	0.00	0.00	0.00	0.00	0.00	0.00	0.00	0.00	0.00	0.00	0.00	0.00
2- 1	0.00	0.00	0.00	0.00	0.00	0.00	0.00	0.00	0.00	0.00	0.00	0.00
2- 2	0.00	0.00	0.00	0.00	0.00	0.00	0.00	0.00	0.00	0.00	0.00	0.00
2- 3	0.00	0.00	0.00	0.00	0.00	0.00	0.00	0.00	0.00	0.00	0.00	0.00
2- 4	0.00	0.00	0.00	0.00	0.00	0.00	0.00	0.00	0.00	0.00	0.00	0.00
2- 5	0.00	0.00	0.00	0.00	0.00	0.00	0.00	0.00	0.00	0.00	0.00	0.00
2- 6	0.00	0.00	0.00	0.00	0.00	0.00	0.00	0.00	0.00	0.00	0.00	0.00
2- 7	0.00	0.00	0.00	0.00	0.00	0.00	0.00	0.00	0.00	0.00	0.00	0.00
2- 8	0.00	0.00	0.00	0.00	0.00	0.00	0.00	0.00	0.00	0.00	0.00	0.00
2- 9	0.00	0.00	0.00	0.00	0.00	0.00	0.00	0.00	0.00	0.00	0.00	0.00
2-10	0.00	0.00	0.00	0.00	0.00	0.00	0.00	0.00	0.00	0.00	0.00	0.00

Right

Serviceability Check: Crack Control (Fill Depth = 14.00 ft)

Bar Mark	Location	Moment (k-ft)	Thrust (k)	Fss (ksi)	Spacing (in)	Allow (in)
A1	Top Corner Bar	-19.5	-15.67	28.81	6.00	7.86
A100	Top Slab (int)	24.0	-5.66	32.28	6.00	9.11
B2	Ext Wall (ext)	-7.2	-15.67	9.33	6.00	35.26

Serviceability Check: Live Load Deflection (Fill Depth = 14.00 ft)

Deflection Ratio of Top Slab = 1/9999 (Limit = 1/800)

Strength Limit State at Critical Sections: Flexure (Fill Depth = 14.00 ft)

Member 1: (Exterior Wall), Thickness = 10.00 in

Loc	Dist. (in)	Design Moment (k-ft)	Corr. A. F. (k)	Mu (k-ft)	ds (in)	Ma (k-ft)	phi	As (in2)	Mcr (k-ft)	Load Ratings IR (Str I)	OR (Str II)
BOT	0.00	1.70	20.37	0.00	7.63	5.89	0.90	0.00	7.19	NC	NC
MID	40.80	4.08	14.04	7.73	8.25	11.16	0.90	0.20	7.19	NC	NC
MID-	51.00	-9.13	20.37	14.28	7.75	19.03	0.90	0.40	7.19	NC	NC
TOP	16.00	-25.30	20.37	29.71	7.63	33.25	0.90	0.88	7.19	NC	NC

Member 2: (Top Slab), Thickness = 12.00 in

Loc	Dist. (in)	Design Moment (k-ft)	Corr. A. F. (k)	Mu (k-ft)	ds (in)	Ma (k-ft)	phi	As (in2)	Mcr (k-ft)	Load Ratings IR (Str I)	OR (Str II)
LT	15.00	-15.28	11.46	38.07	9.63	39.53	0.90	0.88	10.36	NC	NC
MID	77.00	31.10	7.51	40.16	10.13	40.28	0.90	0.88	10.36	NC	NC
RT	15.00	-15.28	11.46	38.07	9.63	39.53	0.90	0.88	10.36	NC	NC

Note: Mu - Resisting moment under pure flexure, Ma - Allowable moment under applied axial load

Strength Limit State at Critical Sections: Vertical Shear (Fill Depth = 14.00 ft)

Member 1: (Exterior Wall), Thickness = 10.00 in

Loc	Dist. (in)	Design Shear (k)	Corr. Moment (k-ft)	Corr. A. F. (k)	Dv (in)	phi*Vn (k)	Beta	Theta	Vc (k)	Vs (k)	Av (in2)	Max. Spac (in)	Load Ratings IR (Str I)	OR (Str II)
BOT	0.00	4.71	0.0	20.37	7.63	29.28	5.031	27.89	32.53a	0.00	0.00	0.00	NC	NC
MID	51.00	3.67	1.6	14.04	8.13	30.65	4.939	28.33	34.06a	0.00	0.00	0.00	NC	NC
MID-	51.00	3.67	1.6	20.37	7.51	29.07	5.070	27.77	32.31a	0.00	0.00	0.00	NC	NC
TOP	23.20	-8.62	21.1	20.37	7.20	12.53	2.280	37.41	13.92a	0.00	0.00	0.00	NC	NC

Member 2: (Top Slab), Thickness = 12.00 in

Loc	Dist. (in)	Design Shear (k)	Corr. Moment (k-ft)	Corr. A. F. (k)	Dv (in)	phi*Vn (k)	Beta	Theta	Vc (k)	Vs (k)	Av (in2)	Max. Spac (in)	Load Ratings IR (Str I)	OR (Str II)
LT	23.64	14.12	6.8	11.46	9.11	18.39	2.646	36.90	20.43a	0.00	0.00	0.00	NC	NC
MID	77.00	0.00	31.1	7.51	9.61	14.66	2.000	45.00	16.29b	0.00	0.00	0.00	NC	NC
RT	23.64	14.12	6.8	11.46	9.11	18.39	2.646	36.90	20.43a	0.00	0.00	0.00	NC	NC

Vc Calculation By: a - Iterative Beta, b - Constant Beta, c - Box Culvert, d - Standard/Arema

Load Combination Results at Tenth Points: (k-ft, k)(Fill Depth = 14.00 ft)

M-PT	+Moment	-Moment	+Axial	-Axial	+Shear	-Shear
Member 1: (Exterior Wall)						
Bottom						
1- 0	0.000	0.000	20.371	20.371	4.714	0.020
1- 1	3.231	-0.371	14.042	20.371	2.900	-0.887
1- 2	4.950	-1.498	14.042	20.371	1.155	-1.759
1- 3	5.214	-3.352	14.042	20.371	-0.522	-2.598
1- 4	4.083	-5.904	14.042	20.371	-2.130	-3.402
1- 5	1.613	-9.125	14.042	20.371	-3.670	-4.778
1- 6	-2.137	-12.987	14.042	20.371	-4.908	-6.250
1- 7	-7.110	-17.459	14.042	20.371	-5.610	-7.654
1- 8	-13.246	-22.514	14.042	20.371	-6.277	-8.989
1- 9	-20.489	-28.964	14.042	20.371	-6.911	-10.256
1-10	-28.779	-38.196	14.042	20.371	-7.510	-11.455
Top						
Member 2: (Top Slab)						
Left						
2- 0	-28.779	-38.196	10.347	11.455	20.371	14.042
2- 1	-10.724	-14.668	7.510	11.455	16.297	11.233
2- 2	7.576	0.053	7.510	10.347	12.223	8.425
2- 3	20.647	9.063	7.510	10.347	8.148	5.617
2- 4	28.490	14.469	7.510	10.347	4.074	2.808
2- 5	31.104	16.271	7.510	10.347	0.000	0.000
2- 6	28.490	14.469	7.510	10.347	-2.808	-4.074
2- 7	20.647	9.063	7.510	10.347	-5.617	-8.148
2- 8	7.576	0.053	7.510	10.347	-8.425	-12.223
2- 9	-10.724	-14.668	7.510	11.455	-11.233	-16.297
2-10	-28.779	-38.196	10.347	11.455	-14.042	-20.371
Right						

Delta 2015.059.003 Chk: KLS

DESIGN RESULTS (Fill Depth = 15.00 ft)
==========

Pinned Reactions Applied to Structure: (service load values, k/unit width) (Fill Depth = 15.00 ft)

```
                          ___________
                         |           |
                         |           |
                         |           |
                         |           |
                    ---->|           |<----
                         A           A
                         |           |
                         |           |
```

	Vertical	Horizontal
DC	2.03	0.17
DW	0.24	0.04
EV	15.50	2.71
EH	0.00	-5.57
LS	0.00	0.00
WA	0.00	0.00
LL	0.00	0.00
Without LL	0.00	0.00
With LL	0.00	0.00

Note: Reactions as shown - positive

Load Parameters:

Fe = 1.15 Surcharge Depth : -1.00 ft

Applied Horizontal Loads: (k/ft)

Load Description	Bottom of Wall	Top of Wall
Horizontal Earth Load	1.680	1.085
Live Load Surcharge	0.000	0.000
Internal Water Pressure	0.000	0.000

Unfactored Moments due to All Loads: (k-ft) (Fill Depth = 15.00 ft)

M-PT	Mdc	Mev	Mdw	Meh	Mls	Mwa	Mll+	Mll-
Member 1: (Exterior Wall)								
Bottom								
1- 0	0.00	0.00	0.00	0.00	0.00	0.00	0.00	0.00
1- 1	-0.14	-2.31	-0.04	4.14	0.00	0.00	0.00	0.00
1- 2	-0.29	-4.61	-0.07	7.10	0.00	0.00	0.00	0.00
1- 3	-0.43	-6.92	-0.11	8.94	0.00	0.00	0.00	0.00
1- 4	-0.57	-9.22	-0.15	9.70	0.00	0.00	0.00	0.00
1- 5	-0.72	-11.53	-0.18	9.41	0.00	0.00	0.00	0.00
1- 6	-0.86	-13.83	-0.22	8.12	0.00	0.00	0.00	0.00
1- 7	-1.00	-16.14	-0.25	5.88	0.00	0.00	0.00	0.00
1- 8	-1.15	-18.44	-0.29	2.72	0.00	0.00	0.00	0.00
1- 9	-1.29	-20.75	-0.33	-1.30	0.00	0.00	0.00	0.00
1-10	-1.43	-23.06	-0.36	-6.16	0.00	0.00	0.00	0.00
Top								
Member 2: (Top Slab)								
Left								
2- 0	-1.43	-23.06	-0.36	-6.16	0.00	0.00	0.00	0.00
2- 1	-0.32	-5.16	-0.08	-6.16	0.00	0.00	0.00	0.00
2- 2	0.54	8.76	0.14	-6.16	0.00	0.00	0.00	0.00
2- 3	1.16	18.71	0.29	-6.16	0.00	0.00	0.00	0.00
2- 4	1.53	24.67	0.39	-6.16	0.00	0.00	0.00	0.00
2- 5	1.66	26.66	0.42	-6.16	0.00	0.00	0.00	0.00
2- 6	1.53	24.67	0.39	-6.16	0.00	0.00	0.00	0.00
2- 7	1.16	18.71	0.29	-6.16	0.00	0.00	0.00	0.00
2- 8	0.54	8.76	0.14	-6.16	0.00	0.00	0.00	0.00
2- 9	-0.32	-5.16	-0.08	-6.16	0.00	0.00	0.00	0.00
2-10	-1.43	-23.06	-0.36	-6.16	0.00	0.00	0.00	0.00
Right								

Unfactored Shears due to All Loads: (k) (Fill Depth = 15.00 ft)

M-PT	Vdc	Vev	Vdw	Veh	Vls	Vwa	Vll+	Vll-
Member 1: (Exterior Wall)								
Bottom								
1- 0	-0.17	-2.71	-0.04	5.57	0.00	0.00	0.00	0.00

1- 1	-0.17	-2.71	-0.04	4.17	0.00	0.00	0.00	0.00
1- 2	-0.17	-2.71	-0.04	2.82	0.00	0.00	0.00	0.00
1- 3	-0.17	-2.71	-0.04	1.52	0.00	0.00	0.00	0.00
1- 4	-0.17	-2.71	-0.04	0.27	0.00	0.00	0.00	0.00
1- 5	-0.17	-2.71	-0.04	-0.94	0.00	0.00	0.00	0.00
1- 6	-0.17	-2.71	-0.04	-2.08	0.00	0.00	0.00	0.00
1- 7	-0.17	-2.71	-0.04	-3.18	0.00	0.00	0.00	0.00
1- 8	-0.17	-2.71	-0.04	-4.23	0.00	0.00	0.00	0.00
1- 9	-0.17	-2.71	-0.04	-5.23	0.00	0.00	0.00	0.00
1-10	-0.17	-2.71	-0.04	-6.18	0.00	0.00	0.00	0.00

Top

Member 2: (Top Slab)
Left

2- 0	0.96	15.50	0.24	0.00	0.00	0.00	0.00	0.00
2- 1	0.77	12.40	0.20	0.00	0.00	0.00	0.00	0.00
2- 2	0.58	9.30	0.15	0.00	0.00	0.00	0.00	0.00
2- 3	0.39	6.20	0.10	0.00	0.00	0.00	0.00	0.00
2- 4	0.19	3.10	0.05	0.00	0.00	0.00	0.00	0.00
2- 5	0.00	0.00	0.00	0.00	0.00	0.00	0.00	0.00
2- 6	-0.19	-3.10	-0.05	0.00	0.00	0.00	0.00	0.00
2- 7	-0.39	-6.20	-0.10	0.00	0.00	0.00	0.00	0.00
2- 8	-0.58	-9.30	-0.15	0.00	0.00	0.00	0.00	0.00
2- 9	-0.77	-12.40	-0.20	0.00	0.00	0.00	0.00	0.00
2-10	-0.96	-15.50	-0.24	0.00	0.00	0.00	0.00	0.00

Right

Unfactored Thrusts due to All Loads: (k) (Fill Depth = 15.00 ft)

M-PT	Pdc	Pev	Pdw	Peh	Pls	Pwa	Pll+	PVll-

Member 1: (Exterior Wall)
Bottom

1- 0	-0.96	-15.50	-0.24	0.00	0.00	0.00	0.00	0.00
1- 1	-0.96	-15.50	-0.24	0.00	0.00	0.00	0.00	0.00
1- 2	-0.96	-15.50	-0.24	0.00	0.00	0.00	0.00	0.00
1- 3	-0.96	-15.50	-0.24	0.00	0.00	0.00	0.00	0.00
1- 4	-0.96	-15.50	-0.24	0.00	0.00	0.00	0.00	0.00
1- 5	-0.96	-15.50	-0.24	0.00	0.00	0.00	0.00	0.00
1- 6	-0.96	-15.50	-0.24	0.00	0.00	0.00	0.00	0.00
1- 7	-0.96	-15.50	-0.24	0.00	0.00	0.00	0.00	0.00
1- 8	-0.96	-15.50	-0.24	0.00	0.00	0.00	0.00	0.00
1- 9	-0.96	-15.50	-0.24	0.00	0.00	0.00	0.00	0.00
1-10	-0.96	-15.50	-0.24	0.00	0.00	0.00	0.00	0.00

Top

Member 2: (Top Slab)
Left

2- 0	-0.17	-2.71	-0.04	-6.18	0.00	0.00	0.00	0.00
2- 1	-0.17	-2.71	-0.04	-6.18	0.00	0.00	0.00	0.00
2- 2	-0.17	-2.71	-0.04	-6.18	0.00	0.00	0.00	0.00
2- 3	-0.17	-2.71	-0.04	-6.18	0.00	0.00	0.00	0.00
2- 4	-0.17	-2.71	-0.04	-6.18	0.00	0.00	0.00	0.00
2- 5	-0.17	-2.71	-0.04	-6.18	0.00	0.00	0.00	0.00
2- 6	-0.17	-2.71	-0.04	-6.18	0.00	0.00	0.00	0.00
2- 7	-0.17	-2.71	-0.04	-6.18	0.00	0.00	0.00	0.00
2- 8	-0.17	-2.71	-0.04	-6.18	0.00	0.00	0.00	0.00
2- 9	-0.17	-2.71	-0.04	-6.18	0.00	0.00	0.00	0.00
2-10	-0.17	-2.71	-0.04	-6.18	0.00	0.00	0.00	0.00

Right

Live Load Parameters: Traffic Direction is Parallel to Main Reinforcement
---

Vehicle	Axle No.	Weight (k/ft)	Length (ft)	Dist. From Previous (ft)

All Vehicles:
Distribution Width: 0.00 ft
Impact Factor : 0.00
Lane:
Lane Load : 0.000 k/ft Distribution Width: 0.00 ft

Unfactored Moments and Shears due to Live Loads: (k-ft, k) (Fill Depth = 15.00 ft)

	Truck				Tandem				Lane			
M-PT	Mll+	Mll-	Vll+	Vll-	Mll+	Mll-	Vll+	Vll-	Mll+	Mll-	Vll+	Vll-

Member 1: (Exterior Wall)
Bottom

1- 0	0.00	0.00	0.00	0.00	0.00	0.00	0.00	0.00	0.00	0.00	0.00	0.00
1- 1	0.00	0.00	0.00	0.00	0.00	0.00	0.00	0.00	0.00	0.00	0.00	0.00
1- 2	0.00	0.00	0.00	0.00	0.00	0.00	0.00	0.00	0.00	0.00	0.00	0.00

1- 3	0.00	0.00	0.00	0.00	0.00	0.00	0.00	0.00	0.00	0.00	0.00	0.00
1- 4	0.00	0.00	0.00	0.00	0.00	0.00	0.00	0.00	0.00	0.00	0.00	0.00
1- 5	0.00	0.00	0.00	0.00	0.00	0.00	0.00	0.00	0.00	0.00	0.00	0.00
1- 6	0.00	0.00	0.00	0.00	0.00	0.00	0.00	0.00	0.00	0.00	0.00	0.00
1- 7	0.00	0.00	0.00	0.00	0.00	0.00	0.00	0.00	0.00	0.00	0.00	0.00
1- 8	0.00	0.00	0.00	0.00	0.00	0.00	0.00	0.00	0.00	0.00	0.00	0.00
1- 9	0.00	0.00	0.00	0.00	0.00	0.00	0.00	0.00	0.00	0.00	0.00	0.00
1-10	0.00	0.00	0.00	0.00	0.00	0.00	0.00	0.00	0.00	0.00	0.00	0.00

Top

Member 2: (Top Slab)

Left

2- 0	0.00	0.00	0.00	0.00	0.00	0.00	0.00	0.00	0.00	0.00	0.00	0.00
2- 1	0.00	0.00	0.00	0.00	0.00	0.00	0.00	0.00	0.00	0.00	0.00	0.00
2- 2	0.00	0.00	0.00	0.00	0.00	0.00	0.00	0.00	0.00	0.00	0.00	0.00
2- 3	0.00	0.00	0.00	0.00	0.00	0.00	0.00	0.00	0.00	0.00	0.00	0.00
2- 4	0.00	0.00	0.00	0.00	0.00	0.00	0.00	0.00	0.00	0.00	0.00	0.00
2- 5	0.00	0.00	0.00	0.00	0.00	0.00	0.00	0.00	0.00	0.00	0.00	0.00
2- 6	0.00	0.00	0.00	0.00	0.00	0.00	0.00	0.00	0.00	0.00	0.00	0.00
2- 7	0.00	0.00	0.00	0.00	0.00	0.00	0.00	0.00	0.00	0.00	0.00	0.00
2- 8	0.00	0.00	0.00	0.00	0.00	0.00	0.00	0.00	0.00	0.00	0.00	0.00
2- 9	0.00	0.00	0.00	0.00	0.00	0.00	0.00	0.00	0.00	0.00	0.00	0.00
2-10	0.00	0.00	0.00	0.00	0.00	0.00	0.00	0.00	0.00	0.00	0.00	0.00

Right

Serviceability Check: Crack Control (Fill Depth = 15.00 ft)

Bar Mark	Location	Moment (k-ft)	Thrust (k)	Fss (ksi)	Spacing (in)	Allow (in)
A1	Top Corner Bar	-20.7	-16.70	30.70	6.00	7.08
A100	Top Slab (int)	25.7	-6.01	34.47	6.00	8.29
B2	Ext Wall (ext)	-7.7	-16.70	10.15	6.00	32.04

Serviceability Check: Live Load Deflection (Fill Depth = 15.00 ft)

Deflection Ratio of Top Slab = 1/9999 (Limit = 1/800)

Strength Limit State at Critical Sections: Flexure (Fill Depth = 15.00 ft)

Member 1: (Exterior Wall), Thickness = 10.00 in

Loc	Dist. (in)	Design Moment (k-ft)	Corr. A. F. (k)	Mu (k-ft)	ds (in)	Ma (k-ft)	phi	As (in2)	Mcr (k-ft)	Load Ratings IR (Str I)	OR (Str II)
BOT	0.00	-1.81	21.71	0.00	7.63	6.28	0.90	0.00	7.19	NC	NC
MID	40.80	4.18	14.97	7.73	8.25	11.41	0.90	0.20	7.19	NC	NC
MID-	51.00	-9.81	21.71	14.28	7.75	19.39	0.90	0.40	7.19	NC	NC
TOP	16.00	-26.96	21.71	29.71	7.63	33.58	0.90	0.88	7.19	NC	NC

Member 2: (Top Slab), Thickness = 12.00 in

Loc	Dist. (in)	Design Moment (k-ft)	Corr. A. F. (k)	Mu (k-ft)	ds (in)	Ma (k-ft)	phi	As (in2)	Mcr (k-ft)	Load Ratings IR (Str I)	OR (Str II)
LT	15.00	-16.19	12.14	38.07	9.63	39.74	0.90	0.88	10.36	NC	NC
MID	77.00	33.20	7.97	40.16	10.13	40.41	0.90	0.88	10.36	NC	NC
RT	15.00	-16.19	12.14	38.07	9.63	39.74	0.90	0.88	10.36	NC	NC

Note: Mu - Resisting moment under pure flexure, Ma - Allowable moment under applied axial load

Strength Limit State at Critical Sections: Vertical Shear (Fill Depth = 15.00 ft)

Member 1: (Exterior Wall), Thickness = 10.00 in

Loc	Dist. (in)	Design Shear (k)	Corr. Moment (k-ft)	Corr. A. F. (k)	Dv (in)	phi*Vn (k)	Beta	Theta	Vc (k)	Vs (k)	Av (in2)	Max. Spac (in)	Load Ratings IR (Str I)	OR (Str II)
BOT	0.00	4.90	0.0	21.71	7.63	29.31	5.037	27.88	32.56a	0.00	0.00	0.00	NC	NC
MID	51.00	3.88	1.6	14.97	8.13	30.84	4.969	28.26	34.26a	0.00	0.00	0.00	NC	NC
MID-	51.00	3.88	1.6	21.71	7.51	29.10	5.074	27.77	32.33a	0.00	0.00	0.00	NC	NC
TOP	23.20	-9.13	22.5	21.71	7.20	12.23	2.225	37.74	13.59a	0.00	0.00	0.00	NC	NC

Member 2: (Top Slab), Thickness = 12.00 in

Loc	Dist. (in)	Design Shear (k)	Corr. Moment (k-ft)	Corr. A. F. (k)	Dv (in)	phi*Vn (k)	Beta	Theta	Vc (k)	Vs (k)	Av (in2)	Max. Spac (in)	Load Ratings IR (Str I)	OR (Str II)
LT	23.64	15.05	7.1	12.14	9.11	17.94	2.581	37.24	19.93a	0.00	0.00	0.00	NC	NC
MID	77.00	0.00	33.2	7.97	9.61	14.66	2.000	45.00	16.29b	0.00	0.00	0.00	NC	NC
RT	23.64	15.05	7.1	12.14	9.11	17.94	2.581	37.24	19.93a	0.00	0.00	0.00	NC	NC

Vc Calculation By: a - Iterative Beta, b - Constant Beta, c - Box Culvert, d - Standard/Arema

Load Combination Results at Tenth Points: (k-ft, k)(Fill Depth = 15.00 ft)

M-PT	+Moment	-Moment	+Axial	-Axial	+Shear	-Shear
Member 1: (Exterior Wall)						
Bottom						
1- 0	0.000	0.000	21.714	14.971	4.903	-0.039
1- 1	3.358	-0.438	14.971	21.714	3.009	-0.986
1- 2	5.134	-1.667	14.971	21.714	1.184	-1.899
1- 3	5.389	-3.656	14.971	21.714	-0.574	-2.777
1- 4	4.179	-6.379	14.971	21.714	-2.262	-3.622
1- 5	1.562	-9.804	14.971	21.714	-3.883	-5.063
1- 6	-2.403	-13.903	14.971	21.714	-5.208	-6.616
1- 7	-7.659	-18.648	14.971	21.714	-5.950	-8.100
1- 8	-14.147	-24.009	14.971	21.714	-6.658	-9.515
1- 9	-21.809	-30.838	14.971	21.714	-7.332	-10.863
1-10	-30.587	-40.619	14.971	21.714	-7.971	-12.142
Top						
Member 2: (Top Slab)						
Left						
2- 0	-30.587	-40.619	10.962	12.142	21.714	14.971
2- 1	-11.384	-15.540	7.971	12.142	17.371	11.977
2- 2	8.123	0.154	7.971	10.962	13.028	8.983
2- 3	22.056	9.760	7.971	10.962	8.686	5.989
2- 4	30.416	15.524	7.971	10.962	4.343	2.994
2- 5	33.202	17.446	7.971	10.962	0.000	0.000
2- 6	30.416	15.524	7.971	10.962	-2.994	-4.343
2- 7	22.056	9.760	7.971	10.962	-5.989	-8.686
2- 8	8.123	0.154	7.971	10.962	-8.983	-13.028
2- 9	-11.384	-15.540	7.971	12.142	-11.977	-17.371
2-10	-30.587	-40.619	10.962	12.142	-14.971	-21.714
Right						

Delta 2015.059.003 Chk: KLS

DESIGN RESULTS (Fill Depth = 16.00 ft)
==========

Pinned Reactions Applied to Structure: (service load values, k/unit width) (Fill Depth = 16.00 ft)

```
                          ___________
                         |           |
                         |           |
                         |           |
                         |           |
                    ---->|           |<----
                         A           A
                         |           |
                         |           |
```

	Vertical	Horizontal
DC	2.03	0.17
DW	0.24	0.04
EV	16.53	2.89
EH	0.00	-5.83
LS	0.00	0.00
WA	0.00	0.00
LL	0.00	0.00
Without LL	0.00	0.00
With LL	0.00	0.00

Note: Reactions as shown - positive

Load Parameters:

Fe = 1.15 Surcharge Depth : -1.00 ft

Applied Horizontal Loads: (k/ft)

Load Description	Bottom of Wall	Top of Wall
Horizontal Earth Load	1.750	1.155
Live Load Surcharge	0.000	0.000
Internal Water Pressure	0.000	0.000

Unfactored Moments due to All Loads: (k-ft) (Fill Depth = 16.00 ft)

M-PT	Mdc	Mev	Mdw	Meh	Mls	Mwa	Mll+	Mll-
Member 1: (Exterior Wall)								
Bottom								
1- 0	0.00	0.00	0.00	0.00	0.00	0.00	0.00	0.00
1- 1	-0.14	-2.46	-0.04	4.33	0.00	0.00	0.00	0.00
1- 2	-0.29	-4.92	-0.07	7.44	0.00	0.00	0.00	0.00
1- 3	-0.43	-7.38	-0.11	9.38	0.00	0.00	0.00	0.00
1- 4	-0.57	-9.84	-0.15	10.18	0.00	0.00	0.00	0.00
1- 5	-0.72	-12.30	-0.18	9.88	0.00	0.00	0.00	0.00
1- 6	-0.86	-14.76	-0.22	8.54	0.00	0.00	0.00	0.00
1- 7	-1.00	-17.22	-0.25	6.19	0.00	0.00	0.00	0.00
1- 8	-1.15	-19.67	-0.29	2.87	0.00	0.00	0.00	0.00
1- 9	-1.29	-22.13	-0.33	-1.36	0.00	0.00	0.00	0.00
1-10	-1.43	-24.59	-0.36	-6.47	0.00	0.00	0.00	0.00
Top								
Member 2: (Top Slab)								
Left								
2- 0	-1.43	-24.59	-0.36	-6.47	0.00	0.00	0.00	0.00
2- 1	-0.32	-5.50	-0.08	-6.47	0.00	0.00	0.00	0.00
2- 2	0.54	9.35	0.14	-6.47	0.00	0.00	0.00	0.00
2- 3	1.16	19.95	0.29	-6.47	0.00	0.00	0.00	0.00
2- 4	1.53	26.32	0.39	-6.47	0.00	0.00	0.00	0.00
2- 5	1.66	28.44	0.42	-6.47	0.00	0.00	0.00	0.00
2- 6	1.53	26.32	0.39	-6.47	0.00	0.00	0.00	0.00
2- 7	1.16	19.95	0.29	-6.47	0.00	0.00	0.00	0.00
2- 8	0.54	9.35	0.14	-6.47	0.00	0.00	0.00	0.00
2- 9	-0.32	-5.50	-0.08	-6.47	0.00	0.00	0.00	0.00
2-10	-1.43	-24.59	-0.36	-6.47	0.00	0.00	0.00	0.00
Right								

Unfactored Shears due to All Loads: (k) (Fill Depth = 16.00 ft)

M-PT	Vdc	Vev	Vdw	Veh	Vls	Vwa	Vll+	Vll-
Member 1: (Exterior Wall)								
Bottom								
1- 0	-0.17	-2.89	-0.04	5.83	0.00	0.00	0.00	0.00

1- 1	-0.17	-2.89	-0.04	4.37	0.00	0.00	0.00	0.00
1- 2	-0.17	-2.89	-0.04	2.96	0.00	0.00	0.00	0.00
1- 3	-0.17	-2.89	-0.04	1.60	0.00	0.00	0.00	0.00
1- 4	-0.17	-2.89	-0.04	0.29	0.00	0.00	0.00	0.00
1- 5	-0.17	-2.89	-0.04	-0.97	0.00	0.00	0.00	0.00
1- 6	-0.17	-2.89	-0.04	-2.18	0.00	0.00	0.00	0.00
1- 7	-0.17	-2.89	-0.04	-3.34	0.00	0.00	0.00	0.00
1- 8	-0.17	-2.89	-0.04	-4.45	0.00	0.00	0.00	0.00
1- 9	-0.17	-2.89	-0.04	-5.51	0.00	0.00	0.00	0.00
1-10	-0.17	-2.89	-0.04	-6.51	0.00	0.00	0.00	0.00

Top

Member 2: (Top Slab)
Left

2- 0	0.96	16.53	0.24	0.00	0.00	0.00	0.00	0.00
2- 1	0.77	13.22	0.20	0.00	0.00	0.00	0.00	0.00
2- 2	0.58	9.92	0.15	0.00	0.00	0.00	0.00	0.00
2- 3	0.39	6.61	0.10	0.00	0.00	0.00	0.00	0.00
2- 4	0.19	3.31	0.05	0.00	0.00	0.00	0.00	0.00
2- 5	0.00	0.00	0.00	0.00	0.00	0.00	0.00	0.00
2- 6	-0.19	-3.31	-0.05	0.00	0.00	0.00	0.00	0.00
2- 7	-0.39	-6.61	-0.10	0.00	0.00	0.00	0.00	0.00
2- 8	-0.58	-9.92	-0.15	0.00	0.00	0.00	0.00	0.00
2- 9	-0.77	-13.22	-0.20	0.00	0.00	0.00	0.00	0.00
2-10	-0.96	-16.53	-0.24	0.00	0.00	0.00	0.00	0.00

Right

Unfactored Thrusts due to All Loads: (k) (Fill Depth = 16.00 ft)

M-PT	Pdc	Pev	Pdw	Peh	Pls	Pwa	Pll+	PVll-

Member 1: (Exterior Wall)
Bottom

1- 0	-0.96	-16.53	-0.24	0.00	0.00	0.00	0.00	0.00
1- 1	-0.96	-16.53	-0.24	0.00	0.00	0.00	0.00	0.00
1- 2	-0.96	-16.53	-0.24	0.00	0.00	0.00	0.00	0.00
1- 3	-0.96	-16.53	-0.24	0.00	0.00	0.00	0.00	0.00
1- 4	-0.96	-16.53	-0.24	0.00	0.00	0.00	0.00	0.00
1- 5	-0.96	-16.53	-0.24	0.00	0.00	0.00	0.00	0.00
1- 6	-0.96	-16.53	-0.24	0.00	0.00	0.00	0.00	0.00
1- 7	-0.96	-16.53	-0.24	0.00	0.00	0.00	0.00	0.00
1- 8	-0.96	-16.53	-0.24	0.00	0.00	0.00	0.00	0.00
1- 9	-0.96	-16.53	-0.24	0.00	0.00	0.00	0.00	0.00
1-10	-0.96	-16.53	-0.24	0.00	0.00	0.00	0.00	0.00

Top

Member 2: (Top Slab)
Left

2- 0	-0.17	-2.89	-0.04	-6.51	0.00	0.00	0.00	0.00
2- 1	-0.17	-2.89	-0.04	-6.51	0.00	0.00	0.00	0.00
2- 2	-0.17	-2.89	-0.04	-6.51	0.00	0.00	0.00	0.00
2- 3	-0.17	-2.89	-0.04	-6.51	0.00	0.00	0.00	0.00
2- 4	-0.17	-2.89	-0.04	-6.51	0.00	0.00	0.00	0.00
2- 5	-0.17	-2.89	-0.04	-6.51	0.00	0.00	0.00	0.00
2- 6	-0.17	-2.89	-0.04	-6.51	0.00	0.00	0.00	0.00
2- 7	-0.17	-2.89	-0.04	-6.51	0.00	0.00	0.00	0.00
2- 8	-0.17	-2.89	-0.04	-6.51	0.00	0.00	0.00	0.00
2- 9	-0.17	-2.89	-0.04	-6.51	0.00	0.00	0.00	0.00
2-10	-0.17	-2.89	-0.04	-6.51	0.00	0.00	0.00	0.00

Right

Live Load Parameters: Traffic Direction is Parallel to Main Reinforcement
---

Vehicle	Axle No.	Weight (k/ft)	Length (ft)	Dist. From Previous (ft)

All Vehicles:
Distribution Width: 0.00 ft
Impact Factor : 0.00
Lane:
Lane Load : 0.000 k/ft Distribution Width: 0.00 ft

Unfactored Moments and Shears due to Live Loads: (k-ft, k) (Fill Depth = 16.00 ft)

	Truck				Tandem				Lane			
M-PT	Mll+	Mll-	Vll+	Vll-	Mll+	Mll-	Vll+	Vll-	Mll+	Mll-	Vll+	Vll-

Member 1: (Exterior Wall)
Bottom

1- 0	0.00	0.00	0.00	0.00	0.00	0.00	0.00	0.00	0.00	0.00	0.00	0.00
1- 1	0.00	0.00	0.00	0.00	0.00	0.00	0.00	0.00	0.00	0.00	0.00	0.00
1- 2	0.00	0.00	0.00	0.00	0.00	0.00	0.00	0.00	0.00	0.00	0.00	0.00

Delta 2015.059.003 Chk: KLS

1- 3	0.00	0.00	0.00	0.00	0.00	0.00	0.00	0.00	0.00	0.00	0.00	0.00
1- 4	0.00	0.00	0.00	0.00	0.00	0.00	0.00	0.00	0.00	0.00	0.00	0.00
1- 5	0.00	0.00	0.00	0.00	0.00	0.00	0.00	0.00	0.00	0.00	0.00	0.00
1- 6	0.00	0.00	0.00	0.00	0.00	0.00	0.00	0.00	0.00	0.00	0.00	0.00
1- 7	0.00	0.00	0.00	0.00	0.00	0.00	0.00	0.00	0.00	0.00	0.00	0.00
1- 8	0.00	0.00	0.00	0.00	0.00	0.00	0.00	0.00	0.00	0.00	0.00	0.00
1- 9	0.00	0.00	0.00	0.00	0.00	0.00	0.00	0.00	0.00	0.00	0.00	0.00
1-10	0.00	0.00	0.00	0.00	0.00	0.00	0.00	0.00	0.00	0.00	0.00	0.00

Top

Member 2: (Top Slab)

Left

2- 0	0.00	0.00	0.00	0.00	0.00	0.00	0.00	0.00	0.00	0.00	0.00	0.00
2- 1	0.00	0.00	0.00	0.00	0.00	0.00	0.00	0.00	0.00	0.00	0.00	0.00
2- 2	0.00	0.00	0.00	0.00	0.00	0.00	0.00	0.00	0.00	0.00	0.00	0.00
2- 3	0.00	0.00	0.00	0.00	0.00	0.00	0.00	0.00	0.00	0.00	0.00	0.00
2- 4	0.00	0.00	0.00	0.00	0.00	0.00	0.00	0.00	0.00	0.00	0.00	0.00
2- 5	0.00	0.00	0.00	0.00	0.00	0.00	0.00	0.00	0.00	0.00	0.00	0.00
2- 6	0.00	0.00	0.00	0.00	0.00	0.00	0.00	0.00	0.00	0.00	0.00	0.00
2- 7	0.00	0.00	0.00	0.00	0.00	0.00	0.00	0.00	0.00	0.00	0.00	0.00
2- 8	0.00	0.00	0.00	0.00	0.00	0.00	0.00	0.00	0.00	0.00	0.00	0.00
2- 9	0.00	0.00	0.00	0.00	0.00	0.00	0.00	0.00	0.00	0.00	0.00	0.00
2-10	0.00	0.00	0.00	0.00	0.00	0.00	0.00	0.00	0.00	0.00	0.00	0.00

Right

Serviceability Check: Crack Control (Fill Depth = 16.00 ft)

Bar Mark	Location	Moment (k-ft)	Thrust (k)	Fss (ksi)	Spacing (in)	Allow (in)
A1	Top Corner Bar	-22.0	-17.74	32.59	6.00	6.40
A100	Top Slab (int)	27.3	-6.36	36.00	6.00	7.78
B2	Ext Wall (ext)	-8.3	-17.74	10.98	6.00	29.31

Serviceability Check: Live Load Deflection (Fill Depth = 16.00 ft)

Deflection Ratio of Top Slab = 1/9999 (Limit = 1/800)

Strength Limit State at Critical Sections: Flexure (Fill Depth = 16.00 ft)

Member 1: (Exterior Wall), Thickness = 10.00 in

Loc	Dist. (in)	Design Moment (k-ft)	Corr. A. F. (k)	Mu (k-ft)	ds (in)	Ma (k-ft)	phi	As (in2)	Mcr (k-ft)	Load Ratings IR (Str I)	OR (Str II)
BOT	0.00	1.92	23.06	0.00	7.63	6.67	0.90	0.00	7.19	NC	NC
MID	40.80	4.28	15.90	7.73	8.25	11.67	0.90	0.20	7.19	NC	NC
MID-	51.00	-10.48	23.06	14.28	7.75	19.76	0.90	0.40	7.19	NC	NC
TOP	16.00	-28.62	23.06	29.71	7.63	33.92	0.90	0.88	7.19	NC	NC

Member 2: (Top Slab), Thickness = 12.00 in

Loc	Dist. (in)	Design Moment (k-ft)	Corr. A. F. (k)	Mu (k-ft)	ds (in)	Ma (k-ft)	phi	As (in2)	Mcr (k-ft)	Load Ratings IR (Str I)	OR (Str II)
LT	15.00	-17.10	12.83	38.07	9.63	39.95	0.90	0.88	10.36	NC	NC
MID	77.00	35.30	8.43	40.16	10.13	40.55	0.90	0.88	10.36	NC	NC
RT	15.00	-17.10	12.83	38.07	9.63	39.95	0.90	0.88	10.36	NC	NC

Note: Mu - Resisting moment under pure flexure, Ma - Allowable moment under applied axial load

Strength Limit State at Critical Sections: Vertical Shear (Fill Depth = 16.00 ft)

Member 1: (Exterior Wall), Thickness = 10.00 in

Loc	Dist. (in)	Design Shear (k)	Corr. Moment (k-ft)	Corr. A. F. (k)	Dv (in)	phi*Vn (k)	Beta	Theta	Vc (k)	Vs (k)	Av (in2)	Max. Spac (in)	Load Ratings IR (Str I)	OR (Str II)
BOT	0.00	5.09	0.0	23.06	7.63	29.34	5.042	27.87	32.60a	0.00	0.00	0.00	NC	NC
MID	51.00	4.10	1.5	15.90	8.13	30.95	4.988	28.22	34.39a	0.00	0.00	0.00	NC	NC
MID-	51.00	4.10	1.5	23.06	7.51	29.12	5.079	27.76	32.36a	0.00	0.00	0.00	NC	NC
TOP	23.20	-9.63	23.9	23.06	7.20	11.93	2.171	38.08	13.25a	0.00	0.00	0.00	NC	NC

Member 2: (Top Slab), Thickness = 12.00 in

Loc	Dist. (in)	Design Shear (k)	Corr. Moment (k-ft)	Corr. A. F. (k)	Dv (in)	phi*Vn (k)	Beta	Theta	Vc (k)	Vs (k)	Av (in2)	Max. Spac (in)	Load Ratings IR (Str I)	OR (Str II)
LT	23.64	15.98	7.5	12.83	9.11	17.58	2.530	37.54	19.53a	0.00	0.00	0.00	NC	NC
MID	77.00	0.00	35.3	8.43	9.61	14.66	2.000	45.00	16.29b	0.00	0.00	0.00	NC	NC
RT	23.64	15.98	7.5	12.83	9.11	17.58	2.530	37.54	19.53a	0.00	0.00	0.00	NC	NC

Vc Calculation By: a - Iterative Beta, b - Constant Beta, c - Box Culvert, d - Standard/Arema

Load Combination Results at Tenth Points: (k-ft, k)(Fill Depth = 16.00 ft)

M-PT	+Moment	-Moment	+Axial	-Axial	+Shear	-Shear
Member 1: (Exterior Wall)						
Bottom						
1- 0	0.000	0.000	23.057	23.057	5.091	-0.099
1- 1	3.484	-0.506	15.901	23.057	3.117	-1.086
1- 2	5.319	-1.836	15.901	23.057	1.212	-2.038
1- 3	5.563	-3.961	15.901	23.057	-0.626	-2.957
1- 4	4.275	-6.853	15.901	23.057	-2.395	-3.842
1- 5	1.511	-10.482	15.901	23.057	-4.096	-5.348
1- 6	-2.669	-14.820	15.901	23.057	-5.508	-6.981
1- 7	-8.208	-19.837	15.901	23.057	-6.291	-8.545
1- 8	-15.047	-25.504	15.901	23.057	-7.039	-10.041
1- 9	-23.129	-32.711	15.901	23.057	-7.753	-11.469
1-10	-32.396	-43.043	15.901	23.057	-8.432	-12.829
Top						
Member 2: (Top Slab)						
Left						
2- 0	-32.396	-43.043	11.576	12.829	23.057	15.901
2- 1	-12.043	-16.412	8.432	12.829	18.446	12.721
2- 2	8.670	0.255	8.432	11.576	13.834	9.541
2- 3	23.465	10.458	8.432	11.576	9.223	6.360
2- 4	32.342	16.580	8.432	11.576	4.611	3.180
2- 5	35.301	18.621	8.432	11.576	0.000	0.000
2- 6	32.342	16.580	8.432	11.576	-3.180	-4.611
2- 7	23.465	10.458	8.432	11.576	-6.360	-9.223
2- 8	8.670	0.255	8.432	11.576	-9.541	-13.834
2- 9	-12.043	-16.412	8.432	12.829	-12.721	-18.446
2-10	-32.396	-43.043	11.576	12.829	-15.901	-23.057
Right						

CALCULATIONS FOR DETACHED HEADWALL

PROJECT CRITERIA:

Concrete:

$f_c := 5000 \frac{lbf}{in^2}$ $E_c := 4074ksi$ $Aggregate_{diam} := .75in$

$\gamma_c := 150 \frac{lbf}{ft^3}$

β_1 = Stress Block Factor specified in Article 5.7.2.2

$$\beta_1 := \max\left[.65, \left[\begin{array}{l} .85 \text{ if } f_c < 4000psi \\ .85 - \frac{.05}{psi} \cdot \left(\frac{f_c - 4000psi}{1000}\right) \text{ otherwise} \end{array}\right]\right]$$

$\beta_1 = 0.8$

Steel:

$f_y := 60000 \frac{lbf}{in^2}$ $E_s := 29000ksi$ $cover := 2in$

$b_w := 12in$

Design Section Width

$t_{wall} := 12in$

$t_{foot} := 12in$

$Length := 13ft + 8in$

$d_{shearkey} := t_{wall} - cover - \frac{1}{4}in = 9.75 \cdot in$

No shearkey in wall face.
Use d.shearkey = d.v = t.wall - clear - 1/4" (for half of #4 bar)

$foot_{width} := 3ft$

$heel := foot_{width} - t_{wall}$

$heel = 2\ ft$

$ELV_{top_hw} := 1006ft$

$ELV_{top_bridge} := 1002.69ft$

$H_{wall} := ELV_{top_hw} - ELV_{top_bridge}$

$H_{wall} = 3.31\ ft$

$\gamma_{soil} := 140 \frac{lbf}{ft^3}$

$\phi := 34deg$

$\beta := atan\left(\frac{1}{4}\right) = 14.036 \cdot deg$

$\theta := 90deg$

$\delta := \frac{2}{3} \cdot \phi = 22.667 \cdot deg$

$k_a := 0.5$

$H_{design} := (foot_{width} - t_{wall}) \cdot \sin(\beta) + H_{wall}$ $\qquad H_{design} = 3.795\,ft$

Determine Anchor Load to Keep Eccentricity in Middle Quarter of Footing:

Driving:

Traffic cannot come within H/2 of wall, therefore LS = 0

$LS := 0$

$EH := Length \cdot \left(\frac{1}{2}\right) \cdot k_a \cdot \gamma_{soil} \cdot H_{design}^{2} \cdot \cos(\delta)$ $\qquad EH = 6357 \cdot lbf$

Resisting:

$DC_{wall} := t_{wall} \cdot (H_{wall} - t_{foot}) \cdot Length \cdot \gamma_c$ $\qquad DC_{wall} = 4735\,lbf$

$DC_{foot} := t_{foot} \cdot foot_{width} \cdot Length \cdot \gamma_c$ $\qquad DC_{foot} = 6150\,lbf$

$EV_{heel} := (H_{wall} - t_{foot}) \cdot heel \cdot Length \cdot \gamma_{soil}$ $\qquad EV_{heel} = 8840\,lbf$

$R_{bolt} := 0lbf$ $\qquad$ Headwall is stable wrt overturning without anchorage.

$\Sigma V := DC_{wall} + DC_{foot} + EV_{heel} + R_{bolt}$ $\qquad \Sigma V = 19725\,lbf$

Factored Moments about "A":

$$Driving := 1.5 \cdot EH \cdot \frac{H_{design}}{3} + 1.75 \cdot LS \cdot \frac{H_{design}}{2}$$ $$Driving = 12063 \cdot lbf \cdot ft$$

$$Resisting := 0.9 \cdot DC_{wall} \cdot \frac{t_{wall}}{2} + 0.9 \cdot DC_{foot} \cdot \frac{foot_{width}}{2} + 1.00 \cdot EV_{heel} \cdot \left(\frac{heel}{2} + t_{wall}\right) + 0.9 R_{bolt} \cdot \left(foot_{width} - 9in\right)$$ $$Resisting = 28113 \cdot lbf \cdot ft$$

$$e := \frac{foot_{width}}{2} - \frac{Resisting - Driving}{\Sigma V}$$ $$e = 0.686\,ft$$

$$e_{all} := \frac{foot_{width}}{4}$$ $$e_{all} = 0.750\,ft$$

$$No_{bolt} := 2$$

$$Anchor_{capacity} := \frac{R_{bolt}}{No_{bolt}}$$ $$Anchor_{capacity} = 0$$

This is the required Ultimate Capacity Required of Each Bolt.

Bolt Capacities:

All bolt products are supplied by Meadow Burke (MB)

Product		Working Load
1"ϕ Coil Insert	MB CX-51 x 5 1/2"	6,250lbf
1"ϕ Coil Rod	MB CR-4	15,000lbf
5x5x1/2" Washer Plate	MB CW-4	7,200lbf
1"ϕ Standard Coild Nut	MB CN-5	7,200lbf

Comparing the working load (in lieu of the ultimate load) to allow higher redundancy and to account for possible bolt deterioration.

ALL VALUES LARGER THAN REQUIRED CAPACITY.....OK

Determine Required Bolt Length:

Nut + Washer + Grip + Insert Penetration

1" + 1/2" + 6" + 2 3/4" = 11.25"

Check Sliding:

$\Sigma V = 19.725 \cdot kip$

$\Sigma H := EH = 6.357 \cdot kip$

$\mu := 0.4$

$R_T := \mu \cdot \Sigma V = 7.89\,ft \cdot \frac{kip}{ft}$ AASHTO 10.6.3.4

$\phi_T := 0.9$

$\boxed{R_r := \phi_T \cdot R_T = 7.101\,ft \cdot \frac{kip}{ft}}$ R.r >ΣH OK Headwall is stable without anchorage

Strength Limit State

Flexural Resistance in Section 5.7.3.2 at Bottom of Wall:

Rebar Layout

$bar_{wall} := 4$ $\qquad$ $s_{wall} := 12in$

$diam_{wall} := \frac{bar_{wall}}{8} in$ $\qquad$ $diam_{wall} = 0.5 \cdot in$

$As_{wall} := \frac{\pi \cdot diam_{wall}^2}{4} \cdot 12 \frac{in}{s_{wall}}$ $\qquad$ $As_{wall} = 0.2 \cdot in^2$

$d_{wall} := t_{wall} - cover - \frac{diam_{wall}}{2}$ $\qquad$ $d_{wall} = 9.75 \cdot in$

$\phi_{moment} := 0.95$ $\qquad$ Per AASHTO Table 12-5.5-1

$LS_{wall} := 0$

$EH_{wall} := \left(\frac{1}{2}\right) \cdot k_a \cdot \gamma_{soil} \cdot \left(H_{design} - t_{foot}\right)^2 \cdot \cos(\delta)$ $\qquad$ $EH_{wall} = 252 \cdot \frac{lbf}{ft}$

$Mu_{wall} := 1.5 EH_{wall} \cdot \frac{H_{design} - t_{foot}}{3} + 1.75 \cdot LS_{wall} \cdot \frac{H_{design} - t_{foot}}{2}$ $\qquad$ $Mu_{wall} = 353 \cdot \frac{lbf \cdot ft}{ft}$

$DC_{wall} := t_{wall} \cdot \left(H_{wall} - t_{foot}\right) \cdot \gamma_c$ $\qquad$ $DC_{wall} = 346.5 \cdot \frac{lbf}{ft}$

$Nu_{wall} := 0.9DC_{wall}$ $\qquad Nu_{wall} = 311.85 \cdot \frac{lbf}{ft}$

$Vu_{wall} := 1.5EH_{wall} + 1.75 \cdot LS_{wall}$ $\qquad Vu_{wall} = 378 \cdot \frac{lbf}{ft}$

Verify that f_y can be substituted for f_s in the equations of 5.7.3.2. This is allowed when $\frac{c}{d_s} \le 0.60$.

$c := \frac{As_{wall} \cdot f_y}{0.85 \cdot f_c \cdot \beta_1 \cdot b_w}$ $\qquad c = 0.289 \cdot in$ $\qquad$ Simplified equation 5.7.3.1.2-4

$\frac{c}{d_{wall}} = 0.03$ $\qquad$ **This is less than 0.60 therefore f_y can be substituted for f_s**

$a_{wall} := \beta_1 \cdot c$ $\qquad a_{wall} = 0.231 \cdot in$

$Mn_{wall} := As_{wall} \cdot f_y \cdot \left(d_{wall} - \frac{a_{wall}}{2} \right) \cdot \frac{1}{b_w}$

$Mr_{wall} := \phi_{moment} \cdot Mn_{wall}$ $\qquad \boxed{Mr_{wall} = 8986 \cdot \frac{lbf \cdot ft}{ft}}$

$\frac{Mr_{wall}}{Mu_{wall}} = 25.483$

$Mr_{wall} > Mu_{wall}$ $\qquad$ **OK**

Determine Shear Resistance

$\phi_{shear} := 0.90$

$\beta := 2$

$\phi Vc_{wall} := \phi_{shear} \cdot .0316 \cdot \beta \cdot \sqrt{f_c \cdot ksi} \cdot b_w \cdot d_{shearkey} = 14.881 \cdot kip$

ϕVc.wall > Vu.wall **OK**

Geometry

ELEV Top Bridge	1002.67	ft	
ELEV Btm Bridge Leg/Top Ped	993.67	ft	*ignores keyway*
ELEV Btm Footing	989.67	ft	
Footing Thickness	1.50	ft	
Pedestal Height	2.50	ft	
Superstructure Height	9.00	ft	
Foundation Height	4.00	ft	
Fill Depth over Superstructure	16.00	ft	
BO Footing to FG	29.00		
LS Equiv Soil Ht per AASHTO 3.11.6.4	2.00	ft	
Bridge Leg Width	0.83	ft	
Pedestal Width	2.00	ft	
Toe Width	2.00	ft	
Heel Width	2.00	ft	
Footing Width	6.00	ft	
Design Section Width, bw	1.00	ft	
Section Weight	2,100	plf	

Note: For strip footings, Ped Height = 0 and Ped Width = Bridge Leg Width

Material Properties

Soils			
Backfill Soil Unit Weight	0.140	kcf	
Backfill Soil Friction Angle, ϕf	34.00	deg	
Lateral Earth Pressure Coef, K	0.307		
Foundation-Footing Friction Coefficient	0.49		per contract plans sht 6
Factored Bearing Resistance	10.51	ksf	per contract plans sht 6, beff = 4.63
Concrete			
Concrete Unit Weight	0.150	kcf	
f'c	4.00	ksi	
Aggregate Diam	0.75	in	
Ec	3,644	ksi	AASHTO 5.4.2.4
$\beta 1$	0.85		AASHTO 5.7.2.2
Steel			
fy	60	ksi	
Es	29,000	ksi	
n (eta)	7.958		

beff	4	12	4.63
qR	10	16.5	10.512

Unfactored Bridge Reactions

	Case	Force (k)
Vertical	DC	2.03
	DW	0.24
	EV	16.53
	EH	0
	LS	0
	LL	0
Horizontal	DC	0.17
	DW	0.04
	EV	2.89
	EH	-5.83
	LS	0
	LL	0

Note: Positive forces are down and toward backfill

Load Factors

Case	Max	Min	Serv
DC	1.25	0.9	1
DW	1.5	0.65	1
EV	1.35	1	1
EH	1.5	0.9	1
LS	1.75	0	1
LL	1.75	0	1

Resistance Factors

Shear	0.9
Sliding	0.9
Bearing	0.45

Assumptions

-Case 1: Maximum Lateral Backfill Load Factor

Check Max and Min Vertical loads

Check With and Without Live Load

-Case 2: Minimum Lateral Backfill Load Factor

Check Max and Min Vertical loads

Check With and Without Live Load

-Allow passive backfill resistance? Yes 1

Case 1: Maximum Lateral Backfill Loads

Note: Positive Forces Are Down and Toward Backfill

Load Description	Dir	Case	Force (k)	Arm (ft)	Max Vert w/LL Factor	Max Vert w/LL F (k)	Max Vert w/LL M (k-ft)	Max Vert No LL Factor	Max Vert No LL F (k)	Max Vert No LL M (k-ft)	Min Vert w/LL Factor	Min Vert w/LL F (k)	Min Vert w/LL M (k-ft)	Min Vert No LL Factor	Min Vert No LL F (k)	Min Vert No LL M (k-ft)	Service Factor	Service F (k)	Service M (k-ft)
From Structure	V	DC	2.03	3.00	1.25	2.54	7.61	1.25	2.54	7.61	0.9	1.83	5.48	0.9	1.83	5.48	1	2.03	6.09
		DW	0.24	3.00	1.5	0.36	1.08	1.5	0.36	1.08	0.65	0.16	0.47	0.65	0.16	0.47	1	0.24	0.72
		EV	16.53	3.00	1.35	22.32	66.95	1.35	22.32	66.95	1	16.53	49.59	1	16.53	49.59	1	16.53	49.59
		EH	0.00	3.00	1.5	0.00	0.00	1.5	0.00	0.00	1.5	0.00	0.00	1.5	0.00	0.00	1	0.00	0.00
		LS	0.00	3.00	1.75	0.00	0.00	1.75	0.00	0.00	1.75	0.00	0.00	1.75	0.00	0.00	1	0.00	0.00
		LL	0.00	3.00	1.75	0.00	0.00	0	0.00	0.00	1.75	0.00	0.00	0	0.00	0.00	1	0.00	0.00
	H	DC	0.17	4.00	1.25	0.21	0.85	1.25	0.21	0.85	0.9	0.15	0.61	0.9	0.15	0.61	1	0.17	0.68
		DW	0.04	4.00	1.5	0.06	0.24	1.5	0.06	0.24	0.65	0.03	0.10	0.65	0.03	0.10	1	0.04	0.16
		EV	2.89	4.00	1.35	3.90	15.61	1.35	3.90	15.61	1	2.89	11.56	1	2.89	11.56	1	2.89	11.56
		EH	-5.83	4.00	1.5	-8.75	-34.98	1.5	-8.75	-34.98	1.5	-8.75	-34.98	1.5	-8.75	-34.98	1	-5.83	-23.32
		LS	0.00	4.00	1.75	0.00	0.00	1.75	0.00	0.00	1.75	0.00	0.00	1.75	0.00	0.00	1	0.00	0.00
		LL	0.00	4.00	1.75	0.00	0.00	0	0.00	0.00	1.75	0.00	0.00	0	0.00	0.00	1	0.00	0.00
EV heel	V	EV	7.70	5.00	1.35	10.40	51.98	1.35	10.40	51.98	1	7.70	38.50	1	7.70	38.50	1	7.70	38.50
EV ped	V	EV	2.04	3.71	1.35	2.76	10.22	1.35	2.76	10.22	1	2.04	7.57	1	2.04	7.57	1	2.04	7.57
DC foot	V	DC	1.35	3.00	1.25	1.69	5.06	1.25	1.69	5.06	0.9	1.22	3.65	0.9	1.22	3.65	1	1.35	4.05
DC pedestal	V	DC	0.75	3.00	1.25	0.94	2.81	1.25	0.94	2.81	0.9	0.68	2.03	0.9	0.68	2.03	1	0.75	2.25
LS footing	H	LS	-0.34	2.00	1.75	-0.60	-1.20	1.75	-0.60	-1.20	1.75	-0.60	-1.20	1.75	-0.60	-1.20	1	-0.34	-0.69
EH ftg	H	EH	-0.34	1.33	1.5	-0.52	-0.69	1.5	-0.52	-0.69	1.5	-0.52	-0.69	1.5	-0.52	-0.69	1	-0.34	-0.46
EH overburden	H	EH	-4.30	2.00	1.5	-6.45	-12.91	1.5	-6.45	-12.91	1.5	-6.45	-12.91	1.5	-6.45	-12.91	1	-4.30	-8.60

Results

Driving Moments *(active behind)*			-49.78				-49.78				-49.78				-49.78				-33.07
Driving Moments *(passive behind)*			-185.7				-185.7				-185.7				-185.7				-123.7
Resisting Moments			162.41				162.41				119.56				119.56				121.17
Total Vertical		40.99	k			40.99	k			30.14	k			30.14	k			30.64	k
Location of Resultant *(active behind)*		2.75	ft			2.75	ft			2.31	ft			2.31	ft			2.88	ft
Location of Resultant *(passive Behind)*		-0.57	k-ft			-0.57	k-ft			-2.20	k-ft			-2.20	k-ft			-0.08	k-ft
Eccentricity,e (negative is toward heel)		0.25	ft			0.25	ft			0.69	ft			0.69	ft			0.12	ft
Check Allowable Eccentricity = b/4 =	**ok**	1.50	ft	**ok**		1.50	ft	**ok**		1.50	ft	**ok**		1.50	ft	**ok**		1.50	ft
Total Horizontal Load (positive is toward heel)		-12.14	k			-12.14	k			-13.25	k			-13.25	k			-7.72	k
Available Passive resistance		-69.70	ft			-69.70	ft			-69.70	ft			-69.70	ft			-46.46	ft
Check Sliding Resistance $= \phi * \tan(\delta) * \Sigma V$	**ok**	18.08	k	**ok**		18.08	k	**ok**		13.29	k	**ok**		13.29	k	**ok**		13.51	k
Effective Footing Width, beff		5.50	ft			5.50	ft			4.63	ft			4.63	ft			5.75	ft
Factored Bearing Resistance		10.51	ksf			10.51	ksf			10.51	ksf			10.51	ksf			10.51	ksf
Check Bearing Pressure $= \Sigma V / beff$	**ok**	7.46	ksf	**ok**		7.46	ksf	**ok**		6.51	ksf	**ok**		6.51	ksf	**ok**		5.33	ksf

Case 2: Minimum Lateral Backfill Loads

Note: Positive Forces Are Down and Toward Backfill

Load Description	Dir	Case	Force (k)	Arm (ft)	Max Vert w/LL Factor	Max Vert w/LL F (k)	Max Vert w/LL M (k-ft)	Max Vert No LL Factor	Max Vert No LL F (k)	Max Vert No LL M (k-ft)	Min Vert w/LL Factor	Min Vert w/LL F (k)	Min Vert w/LL M (k-ft)	Min Vert No LL Factor	Min Vert No LL F (k)	Min Vert No LL M (k-ft)	Service Factor	Service F (k)	Service M (k-ft)
From Structure	V	DC	2.03	3.00	1.25	2.54	7.61	1.25	2.54	7.61	0.9	1.83	5.48	0.9	1.83	5.48	1	2.03	6.09
		DW	0.24	3.00	1.5	0.36	1.08	1.5	0.36	1.08	0.65	0.16	0.47	0.65	0.16	0.47	1	0.24	0.72
		EV	16.53	3.00	1.35	22.32	66.95	1.35	22.32	66.95	1	16.53	49.59	1	16.53	49.59	1	16.53	49.59
		EH	0.00	3.00	0.9	0.00	0.00	0.9	0.00	0.00	0.9	0.00	0.00	0.9	0.00	0.00	1	0.00	0.00
		LS	0.00	3.00	0	0.00	0.00	0	0.00	0.00	0	0.00	0.00	0	0.00	0.00	1	0.00	0.00
		LL	0.00	3.00	1.75	0.00	0.00	0	0.00	0.00	1.75	0.00	0.00	0	0.00	0.00	1	0.00	0.00
	H	DC	0.17	4.00	1.25	0.21	0.85	1.25	0.21	0.85	0.9	0.15	0.61	0.9	0.15	0.61	1	0.17	0.68
		DW	0.04	4.00	1.5	0.06	0.24	1.5	0.06	0.24	0.65	0.03	0.10	0.65	0.03	0.10	1	0.04	0.16
		EV	2.89	4.00	1.35	3.90	15.61	1.35	3.90	15.61	1	2.89	11.56	1	2.89	11.56	1	2.89	11.56
		EH	-5.83	4.00	0.9	-5.25	-20.99	0.9	-5.25	-20.99	0.9	-5.25	-20.99	0.9	-5.25	-20.99	1	-5.83	-23.32
		LS	0.00	4.00	0	0.00	0.00	0	0.00	0.00	0	0.00	0.00	0	0.00	0.00	1	0.00	0.00
		LL	0.00	4.00	1.75	0.00	0.00	0	0.00	0.00	1.75	0.00	0.00	0	0.00	0.00	1	0.00	0.00
EV heel	V	EV	7.70	5.00	1.35	10.40	51.98	1.35	10.40	51.98	1	7.70	38.50	1	7.70	38.50	1	7.70	38.50
EV ped	V	EV	2.04	3.71	1.35	2.76	10.22	1.35	2.76	10.22	1	2.04	7.57	1	2.04	7.57	2	4.08	15.14
DC foot	V	DC	1.35	3.00	1.25	1.69	5.06	1.25	1.69	5.06	0.9	1.22	3.65	0.9	1.22	3.65	1	1.35	4.05
DC pedestal	V	DC	0.75	3.00	1.25	0.94	2.81	1.25	0.94	2.81	0.9	0.68	2.03	0.9	0.68	2.03	1	0.75	2.25
LS footing	H	LS	-0.34	2.00	0	0.00	0.00	0	0.00	0.00	0	0.00	0.00	0	0.00	0.00	1	-0.34	-0.69
EH ftg	H	EH	-0.34	1.33	0.9	-0.31	-0.41	0.9	-0.31	-0.41	0.9	-0.31	-0.41	0.9	-0.31	-0.41	1	-0.34	-0.46
EH overburden	H	EH	-4.30	2.00	0.9	-3.87	-7.74	0.9	-3.87	-7.74	0.9	-3.87	-7.74	0.9	-3.87	-7.74	1	-4.30	-8.60

Results

Driving Moments (active behind)			-29.14				-29.14				-29.14				-29.14				-33.07
Driving Moments (passive behind)			-110.7				-110.7				-110.7				-110.7				-123.7
Resisting Moments			162.41				162.41				119.56				119.56				128.74
Total Vertical		40.99	k			40.99	k			30.14	k			30.14	k			32.68	k
Location of Resultant (active behind)		3.25	ft			3.25	ft			3.00	ft			3.00	ft			2.93	ft
Location of Resultant (passive Behind)		1.26	k-ft			1.26	k-ft			0.29	k-ft			0.29	k-ft			0.15	k-ft
Eccentricity,e (negative is toward heel)		0.00	ft			0.00	ft			0.00	ft			0.00	ft			0.07	ft
Check Allowable Eccentricity = b/4 =	**ok**	1.50	ft	**ok**		1.50	ft	**ok**		1.50	ft	**ok**		1.50	ft	**ok**		1.50	ft
Total Horizontal Load (positive is toward heel)		-5.25	k			-5.25	k			-6.36	k			-6.36	k			-7.72	k
Available Passive resistance		-41.82	ft			-41.82	ft			-41.82	ft			-41.82	ft			-46.46	ft
Check Sliding Resistance $= \phi * \tan(\delta) * \Sigma V$	**ok**	18.08	k	**ok**		18.08	k	**ok**		13.29	k	**ok**		13.29	k	**ok**		14.41	k
Effective Footing Width, beff		6.00	ft			6.00	ft			6.00	ft			6.00	ft			5.85	ft
Factored Bearing Resistance		10.51	ksf			10.51	ksf			10.51	ksf			10.51	ksf			10.51	ksf
Check Bearing Pressure $= \Sigma V / beff$	**ok**	6.83	ksf	**ok**		6.83	ksf	**ok**		5.03	ksf	**ok**		5.03	ksf	**ok**		5.58	ksf

Pedestal Design Forces: Case 1 Maximum Lateral Backfill Loads

Note: Positive Forces Are Toward Backfill

Load Description	Dir	Case	Force (k)	Arm (ft)	Max Vert w/LL Factor	Max Vert w/LL F (k)	Max Vert w/LL M (k-ft)	Max Vert No LL Factor	Max Vert No LL F (k)	Max Vert No LL M (k-ft)	Min Vert w/LL Factor	Min Vert w/LL F (k)	Min Vert w/LL M (k-ft)	Min Vert No LL Factor	Min Vert No LL F (k)	Min Vert No LL M (k-ft)	Service Factor	Service F (k)	Service M (k-ft)
From Structure	H	DC	0.17	2.50	1.25	0.21	0.53	1.25	0.21	0.53	0.9	0.15	0.38	0.9	0.15	0.38	1	0.17	0.43
		DW	0.04	2.50	1.5	0.06	0.15	1.5	0.06	0.15	0.65	0.03	0.07	0.65	0.03	0.07	1	0.04	0.10
		EV	2.89	2.50	1.35	3.90	9.75	1.35	3.90	9.75	1	2.89	7.23	1	2.89	7.23	1	2.89	7.23
		EH	-5.83	2.50	1.5	-8.75	-21.86	1.5	-8.75	-21.86	1.5	-8.75	-21.86	1.5	-8.75	-21.86	1	-5.83	-14.58
		LS	0.00	2.50	1.75	0.00	0.00	1.75	0.00	0.00	1.75	0.00	0.00	1.75	0.00	0.00	1	0.00	0.00
		LL	0.00	2.50	1.75	0.00	0.00	0	0.00	0.00	1.75	0.00	0.00	0	0.00	0.00	0	0.00	0.00
LS footing	H	LS	-0.22	1.25	1.75	-0.38	-0.47	1.75	-0.38	-0.47	1.75	-0.38	-0.47	1.75	-0.38	-0.47	1	-0.22	-0.27
EH ftg	H	EH	-0.13	0.83	1.5	-0.20	-0.17	1.5	-0.20	-0.17	1.5	-0.20	-0.17	1.5	-0.20	-0.17	1	-0.13	-0.11
EH overburden	H	EH	-2.69	1.25	1.5	-4.03	-5.04	1.5	-4.03	-5.04	1.5	-4.03	-5.04	1.5	-4.03	-5.04	1	-2.69	-3.36
				Totals		-9.18	-17.11		-9.18	-17.11		-10.29	-19.87		-10.29	-19.87		-5.77	-10.57

Ped Results: Case 1	Max	Min
Mu	-17.11	-19.87
Vu	-9.18	-10.29
Ms	-10.57	

Notes:

Positive Values indicates tension on toe face. Use for Toe Face design

Negative Values indicates tension on heel face. Use for Heel Face design

Footing Design Forces: Case 1 Maximum Lateral Backfill Loads

Note: Positive Forces Are Down

	Max Vert w/LL Factor	Max Vert w/LL Load	Max Vert No LL Factor	Max Vert No LL Load	Min Vert w/LL Factor	Min Vert w/LL Load	Min Vert No LL Factor	Min Vert No LL Load	Service Factor	Service Load
Total Vertical Load		40.99 k		40.99 k		30.14 k		30.14 k		30.64 k
Eccentricity, e (negative is toward heel)		0.25 ft		0.25 ft		0.69 ft		0.69 ft		0.12 ft
Note: Bearing Pressure for Structural Design to be trapezoidal per 10.6.5:		*B/6 = 1*								
Bearing Pressure @ Heel (AASHTO 11.6.3.2)		-5.108 ksf		-5.108 ksf		-1.581 ksf		-1.581 ksf		-4.469 ksf
Bearing Pressure @ Toe (AASHTO 11.6.3.2)		-8.555 ksf		-8.555 ksf		-8.467 ksf		-8.467 ksf		-5.745 ksf
Bearing Pressure @ Toe Face of Pedestal		-7.406 ksf		-7.406 ksf		-6.172 ksf		-6.172 ksf		-5.319 ksf
Bearing Pressure @ Heel face of Pedestal		-6.257 ksf		-6.257 ksf		-3.876 ksf		-3.876 ksf		-4.894 ksf
DC Toe	1.25	0.5625 k	1.25	0.5625 k	0.90	0.405 k	0.90	0.405 k	1	0.45 k
Upward Moment @ Toe face of Pedestal		-18.08 k-ft		-18.08 k-ft		-19.59 k-ft		-19.59 k-ft		-11.61 k-ft
Upward Shear @ Toe face of Pedestal		-15.4 k		-15.4 k		-14.23 k		-14.23 k		-10.61 k
DC Heel	1.25	0.5625 k	1.25	0.5625 k	0.90	0.405 k	0.90	0.405 k	1	0.45 k
EV Heel	1.35	7.70 k	1.35	7.70 k	1.00	7.70 k	1.00	7.70 k	1	7.70 k
Net Moment @ Heel face of Pedestal		-2.72 k-ft		-2.72 k-ft		3.4124 k-ft		3.4124 k-ft		-1.072 k-ft
Net Shear @ Heel face of Pedestal		-3.103 k		-3.103 k		2.6473 k		2.6473 k		-1.214 k

Downward Only Moment @ Heel face of Pedestal (per 11.6.1.2)		8.2625	k-ft		8.2625	k-ft		8.105	k-ft		8.105	k-ft		8.15	k-ft
Downward Only Shear @ Heel face of Pedestal (per 11.6.1.2)		8.26	k		8.26	k		8.11	k		8.11	k		8.15	k

Ftg Heel Face Results: Case 1	Max	Min
Mu	8.26	-2.72
Vu	8.26	-3.103
Ms	8.15	-1.072

Ftg Toe Face Results: Case 1	Min
Mu	-19.59
Vu	-15.40
Ms	-11.61

Note: Positive Values indicate tension on top of footing

Pedestal Design Forces: Case 2 Minimum Lateral Backfill Loads

Note: Positive Forces Are Toward Backfill

Load Description	Dir	Case	Force (k)	Arm (ft)	Max Vert w/LL Factor	F (k)	M (k-ft)	Max Vert No LL Factor	F (k)	M (k-ft)	Min Vert w/LL Factor	F (k)	M (k-ft)	Min Vert No LL Factor	F (k)	M (k-ft)	Service Factor	F (k)	M (k-ft)
From Structure	H	DC	0.17	2.50	1.25	0.21	0.53	1.25	0.21	0.53	0.9	0.15	0.38	0.9	0.15	0.38	1	0.17	0.43
		DW	0.04	2.50	1.5	0.06	0.15	1.5	0.06	0.15	0.65	0.03	0.07	0.65	0.03	0.07	1	0.04	0.10
		EV	2.89	2.50	1.35	3.90	9.75	1.35	3.90	9.75	1	2.89	7.23	1	2.89	7.23	1	2.89	7.23
		EH	-5.83	2.50	0.9	-5.25	-13.12	0.9	-5.25	-13.12	0.9	-5.25	-13.12	0.9	-5.25	-13.12	0.5	-2.92	-7.29
		LS	0.00	2.50	0	0.00	0.00	0	0.00	0.00	0	0.00	0.00	0	0.00	0.00	0	0.00	0.00
		LL	0.00	2.50	1.75	0.00	0.00	0	0.00	0.00	1.75	0.00	0.00	0	0.00	0.00	1	0.00	0.00
LS footing	H	LS	-0.22	1.25	0	0.00	0.00	0	0.00	0.00	0	0.00	0.00	0	0.00	0.00	0.5	-0.11	-0.13
EH ftg	H	EH	-0.13	0.83	0.9	-0.12	-0.10	0.9	-0.12	-0.10	0.9	-0.12	-0.10	0.9	-0.12	-0.10	0.5	-0.07	-0.06
EH overburden	H	EH	-2.69	1.25	0.9	-2.42	-3.02	0.9	-2.42	-3.02	0.9	-2.42	-3.02	0.9	-2.42	-3.02	0.5	-1.34	-1.68
				Totals		-3.61	-5.81		-3.61	-5.81		-4.72	-8.57		-4.72	-8.57		-1.33	-1.41

Ped Results: Case 2	Max	Min
Mu	-5.81	-8.57
Vu	-3.61	-4.72
Ms	-1.41	

Notes:
Positive Values indicates tension on toe face. Use for Toe Face design
Negative Values indicates tension on heel face. Use for Heel Face design

Footing Design Forces: Case 2 Minimum Lateral Backfill Loads

Note: Positive Forces Are Down

	Max Vert w/LL Factor	Load	Max Vert No LL Factor	Load	Min Vert w/LL Factor	Load	Min Vert No LL Factor	Load	Service Factor	Load
Total Vertical Load		40.99 k		40.99 k		30.14 k		30.14 k		32.68 k
Eccentricity, e (negative is toward heel)		0.00 ft		0.00 ft		0.00 ft		0.00 ft		0.07 ft
Note: Bearing Pressure for Structural Design to be trapezoidal per 10.6.5:		*B/6 = 1*								
Bearing Pressure @ Heel (AASHTO 11.6.3.2)		-6.832 ksf		-6.832 ksf		-5.02 ksf		-5.02 ksf		-5.051 ksf
Bearing Pressure @ Toe (AASHTO 11.6.3.2)		-6.832 ksf		-6.832 ksf		-5.028 ksf		-5.028 ksf		-5.844 ksf
Bearing Pressure @ Toe Face of Pedestal		-6.832 ksf		-6.832 ksf		-5.025 ksf		-5.025 ksf		-5.579 ksf
Bearing Pressure @ Heel face of Pedestal		-6.832 ksf		-6.832 ksf		-5.023 ksf		-5.023 ksf		-5.315 ksf
DC Toe	1.25	0.5625 k	1.25	0.5625 k	0.90	0.405 k	0.90	0.405 k	1	0.45 k
Upward Moment @ Toe face of Pedestal		-13.1 k-ft		-13.1 k-ft		-9.654 k-ft		-9.654 k-ft		-11.59 k-ft
Upward Shear @ Toe face of Pedestal		-13.1 k		-13.1 k		-9.648 k		-9.648 k		-10.97 k
DC Heel	1.25	0.5625 k	1.25	0.5625 k	0.90	0.405 k	0.90	0.405 k	1	0.45 k
EV Heel	1.35	7.70 k	1.35	7.70 k	1.00	7.70 k	1.00	7.70 k	1	7.70 k
Net Moment @ Heel face of Pedestal		-5.401 k-ft		-5.401 k-ft		-1.937 k-ft		-1.937 k-ft		-2.128 k-ft
Net Shear @ Heel face of Pedestal		-5.401 k		-5.401 k		-1.938 k		-1.938 k		-2.216 k

Downward Only Moment @ Heel face of Pedestal (per 11.6.1.2)		8.26 k-ft		8.26 k-ft		8.11 k-ft		8.11 k-ft		8.15 k-ft
Downward Only Shear @ Heel face of Pedestal (per 11.6.1.2)		8.26 k		8.26 k		8.11 k		8.11 k		8.15 k

Ftg Heel Face Results: Case 2	Max	Min
Mu	8.26	-5.401
Vu	8.26	-5.401
Ms	8.15	-2.128

Ftg Toe Face Results: Case 2	Min
Mu	-13.10
Vu	-13.10
Ms	-11.59

Note: Positive Values indicate tension on top of footing

Pedestal Structural Design Results

Pedestal Results	Max	Min
Mu	-5.81	-19.87
Vu	-3.61	-10.29
Ms	-1.41	-10.57

Notes:
Positive Values indicates tension on toe face. Use for Toe Face design
Negative Values indicates tension on heel face. Use for Heel Face design

Pedestal Heel Face Rebar Layout

Bar	# 5	Space	10 in	Diam	0.63 in	As	0.3682 in^2	Cover	2 in

Check Moment Resistance

d = $t_{ped} - cover - \frac{diam}{2} =$	21.6875 in	
c $= \frac{A_s F_y}{0.85 f'_c \beta_1 b_w} =$	0.63695 in	
Per AASHTO 5.7.3.2, fy may be substituted for fs when c/d <0.60:		
c/d =	0.02937	**ok**
a = β1*c =	0.5414 in	
$\phi_{moment} = 0.75 \le 0.65 + 0.15(\frac{d}{c} - 1) \le 0.9$	0.9	per 5.5.4.2.1
Mr $= \phi_{moment} A_s f_y \left(d - \frac{a}{2}\right) =$	35.4812 kip-ft	
Mu	-19.87 kip-ft	**ok**

Check Minimum Flexural Reinforcing (5.7.3.3.2)

fr $= 0.24\sqrt{f'_c} =$	0.48 ksi	
I_g $= \frac{1}{12} b_w t_{ped}^3 =$	13824 in^4	
y_t $= \frac{1}{2} t_{ped} =$	12 in	

$\gamma_3 =$ 0.67 $\gamma_1 =$ 1.2

Check Crack Control (5.7.3.4)

$\rho = \frac{A_s}{b_w d} =$	0.0014	
k $= \sqrt{2\rho\eta + (\rho\eta)^2} - \rho\eta =$	0.1392	
j $= 1 - \frac{k}{3} =$	0.9536	
Ms	-10.57	
fss $= \frac{M_s}{A_s j d} =$	16.654 ksi	
d_c $= t - d =$	2.3125 in	
βs $= 1 + \frac{d_c}{0.7(t - d_c)} =$	1.1523	
γ_e =	0.75	
s_max $= \frac{700\gamma_e}{\beta_s f_{ss} b_w} - 2d_c =$	22.7 in	**ok**

Check Shear Resistance (5.8.3.3)

d_v $= \max(0.72t, 0.9d)$	19.519 in
β	2
Vr $= \phi_{shear} 0.0316 \beta \sqrt{f'_c} b_w d_v =$	26.645 k

Mcr $= \gamma_3 \gamma_1 f_r \frac{I_g}{y_t} =$	37.0483 k-ft	
1.33Mu =	26.4274 k-ft	
Check Mr > min(1.33Mu,Mcr)	35.4812 k-ft	**ok**

Pedestal Toe Face Rebar Layout

Bar	# 5	Space	10 in	Diam	0.63 in	As	0.3682 in^2	Cover	2 in

Check Moment Resistance

d = $t_{ped} - cover - \frac{diam}{2} =$	21.6875 in	
c $= \frac{A_s F_y}{0.85 f'_c \beta_1 b_w} =$	0.63695 in	

Per AASHTO 5.7.3.2, fy may be substituted for fs when c/d <0.60:

c/d =	0.02937	**ok**
a = β1*c =	0.5414 in	
$\phi_{moment} = 0.75 \le 0.65 + 0.15(\frac{d}{c} - 1) \le 0.9$	0.9	per 5.5.4.2.1
Mr $= \phi_{moment} A_s f_y \left(d - \frac{a}{2}\right) =$	35.4812 kip-ft	
Mu	0.00 kip-ft	**ok**

Check Minimum Flexural Reinforcing (5.7.3.3.2)

fr $= 0.24\sqrt{f'_c} =$	0.48 ksi	
I_g $= \frac{1}{12} b_w t_{ped}^3 =$	13824 in^4	
y_t $= \frac{1}{2} t_{ped} =$	12 in	

$\gamma_3 =$ 0.67 $\gamma_1 =$ 1.2

Mcr $= \gamma_3 \gamma_1 f_r \frac{I_g}{y_t} =$	37.0483 k-ft	
1.33Mu =	0 k-ft	

Check Crack Control (5.7.3.4)

$\rho = \frac{A_s}{b_w d} =$	0.0014	
k $= \sqrt{2\rho\eta + (\rho\eta)^2} - \rho\eta =$	0.1392	
j $= 1 - \frac{k}{3} =$	0.9536	
Ms	0.00	
$fss = \frac{M_s}{A_s j d} =$	0 ksi	
d_c $= t - d =$	2.3125 in	
βs $= 1 + \frac{d_c}{0.7(t - d_c)} =$	1.1523	
γ_e =	0.75	
s_max $= \frac{700\gamma_e}{\beta_s f_{ss} b_w} - 2d_c =$	#DIV/0! in	**#DIV/0!**

Check Shear Resistance (5.8.3.3)

d_v $= \max(0.72t, 0.9d)$	19.519	
β	2	
Vr $= \phi_{shear} 0.0316 \beta \sqrt{f'_c} b_w d_v =$	26.645 k	
Vu	0.00 k	**ok**

Note: Per 5.10.8, Footings are exempt from temperature/shrinkage steel requirements

Vu	-10.29 k	**ok**

Note: Per 5.10.8, Footings are exempt from temperature/shrinkage steel requirements

Check Mr > min(1.33Mu,Mcr)	35.4812 k-ft	**ok**

Footing Btm Face - Structural Design

Btm Face Results	Heel	Toe
Mu	-5.40	-19.59
Vu	-5.40	-15.40
Ms	-2.13	-11.61

Notes:
Positive Values indicates tension on top face
Negative Values indicates tension on btm face

Footing Btm Face Rebar Layout

Bar # 5 Space 10 in Diam 0.63 in As 0.3682 in^2 Cover 2 in

Check Moment Resistance

d = $t_{foot} - cover - \frac{diam}{2} =$	15.6875 in	
c $= \frac{A_s F_y}{0.85 f'_c \beta_1 b_w} =$	0.63695 in	

Per AASHTO 5.7.3.2, fy may be substituted for fs when c/d <0.60:

c/d =	0.0406	**ok**
a = $\beta 1$*c =	0.5414 in	
$\phi_{moment} = 0.75 \le 0.65 + 0.15(\frac{d}{c} - 1) \le 0.9$	0.9	per 5.5.4.2.1
Mr $= \phi_{moment} A_s f_y \left(d - \frac{a}{2}\right) =$	25.541 kip-ft	
Mu	-19.59 kip-ft	**ok**

Check Minimum Flexural Reinforcing (5.7.3.3.2)

fr $= 0.24\sqrt{f'_c} =$	0.48 ksi	
I_g $= \frac{1}{12} b_w t_{foot}^3 =$	5832 in^4	
y_t $= \frac{1}{2} t_{foot} =$	9 in	

$\gamma_3 =$ 0.67 $\gamma_1 =$ 1.2

Mcr $= \gamma_3 \gamma_1 f_r \frac{I_g}{y_t} =$	20.8397 k-ft	
1.33Mu =	26.0539 k-ft	
Check Mr > min(1.33Mu,Mcr)	25.541 k-ft	**ok**

Check Crack Control (5.7.3.4)

$\rho = \frac{A_s}{b_w d} =$	0.002	
k $= \sqrt{2\rho\eta + (\rho\eta)^2} - \rho\eta =$	0.1615	
j $= 1 - \frac{k}{3} =$	0.9462	
Ms	-11.61	
$fss = \frac{M_s}{A_s j d} =$	25.487 ksi	
d_c $= t - d =$	2.3125 in	
βs $= 1 + \frac{d_c}{0.7(t - d_c)} =$	1.2106	
γ_e =	0.75	
s_max $= \frac{700\gamma_e}{\beta_s f_{ss} b_w} - 2d_c =$	12.4 in	**ok**

Check Shear Resistance (5.8.3.3)

d_v $= \max(0.72t, 0.9d)$	14.119	
β	2	
Vr $= \phi_{shear} 0.0316 \beta \sqrt{f'_c} b_w d_v =$	19.274 k	
Vu	-15.40 k	**ok**

Note: Per 5.10.8, Footings are exempt from temperature/shrinkage steel requirements

Footing Top Face - Structural Design

Top Face Results	Heel
Mu	8.26
Vu	8.26
Ms	8.15

Notes:
Positive Values indicates tension on top face
Negative Values indicates tension on btm face

Footing Top Face Rebar Layout

Bar # 5 Space 10 in Diam 0.63 in As 0.3682 in^2 Cover 2 in

Check Moment Resistance

d = $t_{foot} - cover - \frac{diam}{2} =$	15.6875 in	
c $= \frac{A_s F_y}{0.85 f'_c \beta_1 b_w} =$	0.63695 in	
Per AASHTO 5.7.3.2, fy may be substituted for fs when c/d <0.60:		
c/d =	0.0406	**ok**
a = $\beta 1$*c =	0.5414 in	
$\phi_{moment} = 0.75 \le 0.65 + 0.15(\frac{d}{c} - 1) \le 0.9$	0.9	per 5.5.4.2.1
Mr $= \phi_{moment} A_s f_y \left(d - \frac{a}{2}\right) =$	25.541 kip-ft	
Mu	8.26 kip-ft	**ok**

Check Minimum Flexural Reinforcing (5.7.3.3.2)

fr $= 0.24\sqrt{f'_c} =$	0.48 ksi	
I_g $= \frac{1}{12} b_w t_{foot}^3 =$	5832 in^4	
y_t $= \frac{1}{2} t_{foot} =$	9 in	
γ_3 = 0.67 γ_1 = 1.2		
Mcr $= \gamma_3 \gamma_1 f_r \frac{I_g}{y_t} =$	20.8397 k-ft	
1.33Mu =	10.9891 k-ft	
Check Mr > min(1.33Mu,Mcr)	25.541 k-ft	**ok**

Check Crack Control (5.7.3.4)

$\rho = \frac{A_s}{b_w d} =$	0.002	
k $= \sqrt{2\rho\eta + (\rho\eta)^2} - \rho\eta =$	0.1615	
j $= 1 - \frac{k}{3} =$	0.9462	
Ms	8.15	
$fss = \frac{M_s}{A_s j d} =$	17.898 ksi	
d_c $= t - d =$	2.3125 in	
βs $= 1 + \frac{d_c}{0.7(t - d_c)} =$	1.2106	
γ_e =	0.75	
s_max $= \frac{700\gamma_e}{\beta_s f_{ss} b_w} - 2d_c =$	19.6 in	**ok**

Check Shear Resistance (5.8.3.3)

d_v $= \max(0.72t, 0.9d)$	14.119	
β	2	
Vr $= \phi_{shear} 0.0316 \beta \sqrt{f'_c} b_w d_v =$	19.274 k	
Vu	8.26 k	**ok**

Note: Per 5.10.8, Footings are exempt from temperature/shrinkage steel requirements

Design/Analysis References:

1. AASHTO LRFD Bridge Design Specifications, 6th Edition.
2.
3. Das, Principles of Foundation Engineering, 5th Edition.
4. Holtz & Kovacs, Introduction to Geotechnical Engineering
5. AISC, Steel Construction Manual, 13th Edition
6. Highway Innovative Technology Evaluation Center (HITEC), Evaluation of the Con/Span Wingwall System, CERF Report #40580, July 2001.
7. Contract Plans (VAOT)

Assumptions:

1. It is assumed that the failure plane of the soil to be retained by this wall will lie within the proposed backfill material.
2. The proposed backfill material will meet the material requirements of the contract plans and be constructed to meet the requirements of the contract documents. This material is assumed to have a friction angle = 34 degrees and a dry unit weight = 140 pcf.
3. The installation of the weepholes will preclude the development of hydrostatic pressures on the wall.
4. Passive earth pressure in front of the wall is ignored per AASHTO 11.6.3.5.
5. Site Layout. Roadway Skew 35 degrees. (3) wingwall designs due to varying design height and backfill slope.
6. Backslope Angle. WW1 2:1 at 25 degrees. WW2 and WW3 flat. WW4 flat then 2:1 - Use 5:1 for design. Use infinite backslopes for designs (Break_In_Slope = 0, see below).
7. Live Load Surcharge. N/A - traffic is well belond H/2 for all cases.
8. The HITEC Evaluation (page 3) explains that the Anchor Wall acts as a cantilever wall for most of its length since the weight of the soil within and above the anchors provides resistance to overturning. The wall also has attributes of a bin wall since arching and friction of soil masses between anchors provides additional resistance. Therefore, the provisions of AASHTO Sections 11.6 (Conventional Retaining Walls) and 11.11 (Modular Walls) shall be applied.
9. Per AASHTO 11.11.4.4, a maximum of 80% of the weight of the retained soil is effective in resisting overturning. The HITEC Evaluation (pages D29-D33) evaluated the accuracy of this assumption and found that using 80% of the soil weight is a conservative assumption.
10. The Top of Wingwall elevations are 2 inches below the top of headwall elevations.

General Input:

$ELV_{walltop} := 1006ft - 2in = 1005.83\,ft$ — Elevation of the Wingwall at its tallest point

$ELV_{walltip} := 1002ft$ — Elevation of Wingwall at its tip.

$ELV_{bot.ftg} := 993.67ft$ — Elevation of the Bottom of the Wall Footing

$t_{ftg} := 10in$ — Pedestal Footing design, separate

$h_{ftg} := 0ft$ — Pedestal Footing design, separate

$h_{short} := ELV_{walltip} - ELV_{bot.ftg} - h_{ftg} - 1in = 8.247\,ft$ — Short end of wall (less 1" for shim)

$h_{tall} := ELV_{walltop} - ELV_{bot.ftg} - h_{ftg} - 1in = 12.08\,ft$ — Tall end of wall (less 1" for shim)

$l_{wall} := 16ft$ — Length of Wall Panel

$l_{flat} := 1ft$ — Length of flat portion of wingwall before break in slope.

$t_{wall} := 10in$ — Thickness of Wall Panel

$t_{stem} := 6in$ — Thickness of Anchor Stem

$w_{flange} := 2ft + 6in$ — Width of Anchor Flange

$\alpha_{skew} := 25deg$ — Angle of ww skew in plan view, measured from edge of roadway. (to measure distance to traffic for each anchor)

$\theta_{wall} := 90deg$ — Wall batter angle with horizontal

$\theta_{anchor} := \theta_{wall} + 30deg$ — Anchor batter angle with horizontal

$\beta := atan\left(\frac{cos(\alpha_{skew})}{2}\right) = 24.378 \cdot deg$ — Backfill slope angle with horizontal, measured perpendicular to the wall.

$d_{traffic} := 35ft$ — Estimated minimum distance to traffic, measured from backfill side of wall and perpendicular to the wall.

$BreakInSlope := 0ft$ — Assumed distance from face of guardrail to break-in-slope, meaured perpendicular to the wall.

Wall Material Properties

Concrete

$f_c := 5000 \frac{lbf}{in^2}$ $E_c := 4074ksi$ $Aggregate_{diam} := .75in$

$\gamma_c := 150pcf$ Assumed unit weight of concrete panel.

β_1 = Stress Block Factor specified in Article 5.7.2.2

$$\beta_1 := \max\left[.65, \left[\begin{array}{l} .85 \quad \text{if } f_c < 4000psi \\ .85 - \frac{.05}{psi} \cdot \left(\frac{f_c - 4000psi}{1000}\right) \quad \text{otherwise} \end{array}\right]\right] = 0.8$$

Steel:

$f_y := 60000 \frac{lbf}{in^2}$ $E_s := 29000ksi$

Soil:

$q_R := 10ksf$ Minimum factored bearing resistance given in contract, sht 6

$\gamma_s := 140pcf$ Assumed soil unit weight for all soil

$q_{sur} := 2ft \cdot \gamma_s = 280 \cdot psf$ Surcharge Soil Pressure (AASHTO Tbl 3.11.6.4-2)

$\phi_{ftg} := 36deg$ Friction Angle of Soil below Wall Footing

$\phi_{backfill} := 34deg$ Friction Angle of Backfill Soil

$\delta_{wall} := 0.75 \cdot \phi_{backfill} = 25.5 \cdot deg$ AASHTO C3.11.5.9-1 and HITEC p.D19

$\delta_{anchor} := 0.50 \cdot \phi_{backfill} = 17 \cdot deg$ AASHTO C3.11.5.9-1 and HITEC p.D19

$$k_{a.wall} := \frac{\sin(\theta_{wall} + \phi_{backfill})^2}{\sin(\theta_{wall})^2 \cdot \sin(\theta_{wall} - \delta_{wall}) \cdot \left(1 + \sqrt{\frac{\sin(\phi_{backfill} + \delta_{wall}) \cdot \sin(\phi_{backfill} - \beta)}{\sin(\theta_{wall} - \delta_{wall}) \cdot \sin(\theta_{wall} + \beta)}}\right)^2} = 0.378$$

AASHTO 3.11.5.3

$$k_{a.anchor} := \frac{\sin(\theta_{anchor} + \phi_{backfill})^2}{\sin(\theta_{anchor})^2 \cdot \sin(\theta_{anchor} - \delta_{anchor}) \cdot \left(1 + \sqrt{\frac{\sin(\phi_{backfill} + \delta_{anchor}) \cdot \sin(\phi_{backfill} - \beta)}{\sin(\theta_{anchor} - \delta_{anchor}) \cdot \sin(\theta_{anchor} + \beta)}}\right)^2} = 0.12$$

AASHTO 3.11.5.3

$$k_0 := 1 - \sin(\phi_{backfill}) = 0.441$$

AASHTO 3.11.5.2-1

Determine Load Factors (Strength I) (AASHTO 1.3 and Table 3.4.1-1)

Load Modifiers

$\eta_D := 1.00$ Ductility for a conventional design

$\eta_R := 1.00$ Redundancy for conventional design

$\eta_I := 1.00$ Importance for a conventional bridge

$\eta_i := \max(\eta_D \cdot \eta_R \cdot \eta_I, 0.95)$ $\eta_i = 1$

Load Factor	Max	Min	Service	
γ_{DC}	1.25	0.9	1.0	Component Dead Loads
γ_{EH}	1.5	0.9	1.0	Horizontal Earth Loads
γ_{EV}	1.35	1.0	1.0	Vertical Earth Loads
γ_{LL}	1.75	1.75	1.0	Live Loads

Anchor Types, Layout and Backfill Geometry

$ConnectedToBridge := \text{"No"}$

To account for the connection of the wing to the bridge. Choose between Yes and No.

$AnchorType_1 := \text{"F"}$

$AnchorType_2 := \text{"F"}$

$AnchorType_3 := \text{"F"}$

Anchor Type to be tied to the back face of the wall. Chosen between Anchor Type B, C, D, and E as defined below.

$dist_{anchor.1} := 3ft$

$dist_{anchor.2} := 8ft$

$dist_{anchor.3} := 13ft$

Distance to each anchor is from culvert end of wing. Anchor 1 is closest to culvert.

Note: Research in HITEC report supports spacing from 2.5 ft (anchors are touching) to 5.5 feet (HITEC Report pages D29-D33). If distance between anchors increases beyond 5.5 ft, data supporting the usable 80% soil weight assumption shall be provided due to possible affects on soil arching between the anchors. Similarly, anchor closest to the wall tip shall not exceed 3 feet without supporting data.

If only 1 anchor is used, set $dist_{anchor2} = dist_{anchor3} = 0$.

If only 2 anchors are used, set $dist_{anchor3} = 0$.

Tributary Width of Wall for each Anchor

$$trib_{plates} := \begin{cases} 0 & \text{if } ConnectedToBridge = \text{"No"} \\ \frac{1}{2} \cdot dist_{anchor.1} & \text{otherwise} \end{cases} = 0\,ft$$

$$trib_1 := \begin{cases} l_{wall} - trib_{plates} & \text{if } dist_{anchor.2} = 0 \\ \frac{1}{2} \cdot \left(dist_{anchor.1} + dist_{anchor.2}\right) - trib_{plates} & \text{otherwise} \end{cases} = 5.5\,ft$$

$$trib_2 := \begin{cases} \left[l_{wall} - \frac{1}{2}\left(dist_{anchor.1} + dist_{anchor.2}\right)\right] & \text{if } dist_{anchor.3} = 0 \\ \frac{1}{2}\left(dist_{anchor.2} + dist_{anchor.3}\right) - \frac{1}{2}\left(dist_{anchor.1} + dist_{anchor.2}\right) & \text{otherwise} \end{cases} = 5\,ft$$

$$trib_3 := l_{wall} - \left(trib_1 + trib_2 + trib_{plates}\right) = 5.5\,ft$$

Height of Wall at CL of Each Anchor

$$h(x) := \begin{cases} 0 & \text{if } x = 0 \\ h_{tall} & \text{if } 0 < x \le l_{flat} \\ \left[h_{tall} - \left(\frac{h_{tall} - h_{short}}{l_{wall} - l_{flat}}\right)\cdot\left(x - l_{flat}\right)\right] & \text{otherwise} \end{cases}$$

$h_{wall.1} := h\left(dist_{anchor.1}\right) = 11.569\,ft$

$h_{wall.2} := h\left(dist_{anchor.2}\right) = 10.291\,ft$

$h_{wall.3} := h\left(dist_{anchor.3}\right) = 9.013\,ft$

Height of wall at each anchor

Length of each Anchor Stem Extension

$$W(x) := \begin{cases} (0ft) & \text{if } x = \text{"B"} \\ (1ft) & \text{if } x = \text{"C"} \\ (2ft) & \text{if } x = \text{"D"} \\ (3ft) & \text{if } x = \text{"E"} \\ (4ft) & \text{if } x = \text{"F"} \end{cases}$$

W is the additional anchor stem length beyond that of a "B" anchor. W(B) = 0

$W_1 := W\left(AnchorType_1\right) = 4\,ft$

$W_2 := W\left(AnchorType_2\right) = 4\,ft$

$W_3 := W\left(AnchorType_3\right) = 4\,ft$

Width of Soil Column above each Anchor

B_{bot} is the width of the soil column at the top of the anchor, measured from backfill side of wall to upper tip of each anchor.

$$B_{bot.1} := W_1 + (3ft + 5.375in) + \frac{7in}{\cos(30deg)} = 8.121\,ft$$

$$B_{bot.2} := W_2 + (3ft + 5.375in) + \frac{7in}{\cos(30deg)} = 8.121\,ft$$

$$B_{bot.3} := W_3 + (3ft + 5.375in) + \frac{7in}{\cos(30deg)} = 8.121\,ft$$

$B_{bot.lower}$ is the width of the soil column at the bottom of the anchor, measured from backfill side of wall to bottom tip of anchor.

$$B_{bot.lower.1} := W_1 + \left(1ft + 4in + \frac{7in}{\cos(30deg)}\right) = 6.007\,ft$$

$$B_{bot.lower.2} := W_2 + \left(1ft + 4in + \frac{7in}{\cos(30deg)}\right) = 6.007\,ft$$

$$B_{bot.lower.3} := W_3 + \left(1ft + 4in + \frac{7in}{\cos(30deg)}\right) = 6.007\,ft$$

Perpendicular Distance to Traffic at each Anchor

$$d_{traffic.1} := d_{traffic} + dist_{anchor.1} \cdot \tan(\alpha_{skew}) = 36.399\,ft$$

$$d_{traffic.2} := d_{traffic} + dist_{anchor.2} \cdot \tan(\alpha_{skew}) = 38.73\,ft$$

$$d_{traffic.3} := d_{traffic} + dist_{anchor.3} \cdot \tan(\alpha_{skew}) = 41.062\,ft$$

Height of backfill at CL of each anchor

$$d_{slope.1} := \max(0, \min(B_{bot.1}, d_{traffic.1} - BreakInSlope)) = 8.121\,ft$$

$$d_{slope.2} := \max(0, \min(B_{bot.2}, d_{traffic.2} - BreakInSlope)) = 8.121\,ft$$

$$d_{slope.3} := \max(0, \min(B_{bot.3}, d_{traffic.3} - BreakInSlope)) = 8.121\,ft$$

Distance to break in slope, measured perpendicular to wall from inside face of wall, limited by B.bot.

$$h_{backfill.1} := \max(h_{wall.1}, h_{wall.1} + \min(B_{bot.1}, d_{slope.1}) \cdot \tan(\beta)) = 15.249\,ft$$

$$h_{backfill.2} := \max(h_{wall.2}, h_{wall.2} + \min(B_{bot.2}, d_{slope.2}) \cdot \tan(\beta)) = 13.971\,ft$$

$$h_{backfill.3} := \max(h_{wall.3}, h_{wall.3} + \min(B_{bot.3}, d_{slope.3}) \cdot \tan(\beta)) = 12.694\,ft$$

The height of backfill is taken at the end of the reinforced soil mass.

External Stability Analysis at Anchor 1

Calculate Vertical Loads and Associated Lever Arms ***(All Lever Arms are from Point "O")***

$$DC_{wall.1} := t_{wall} \cdot h_{wall.1} \cdot \gamma_c = 1.446 \cdot \frac{kip}{ft}$$

$$x_{DC.wall.1} := \frac{1}{2} t_{wall} = 0.417\,ft$$

$$EV1a_1 := \frac{1}{2} \gamma_s \cdot \left(h_{backfill.1} - h_{wall.1}\right) \cdot \left(d_{slope.1}\right) = 2.092 \cdot \frac{kip}{ft}$$

$$x_{EV1a.1} := t_{wall} + \frac{2}{3} d_{slope.1} = 6.248\,ft$$

$$EV1b_1 := \gamma_s \cdot \left(h_{backfill.1} - h_{wall.1}\right) \cdot \left(B_{bot.1} - d_{slope.1}\right) = 0 \cdot \frac{kip}{ft}$$

$$x_{EV1b.1} := t_{wall} + d_{slope.1} + \frac{1}{2}\left(B_{bot.1} - d_{slope.1}\right) = 8.955\,ft$$

$$EV2_1 := \gamma_s \cdot \left(h_{wall.1} - 3.5ft\right) \cdot B_{bot.1} = 9.174 \cdot \frac{kip}{ft}$$

$$x_{EV2.1} := t_{wall} + \frac{1}{2} B_{bot.1} = 4.894\,ft$$

$$EV3_1 := \gamma_s \cdot (3.5ft) \cdot \left(B_{bot.lower.1} - \frac{7in}{\cos(30deg)}\right) = 2.613 \cdot \frac{kip}{ft}$$

$$x_{EV3.1} := t_{wall} + \frac{1}{2}\left(B_{bot.lower.1} - \frac{7in}{\cos(30deg)}\right) = 3.5\,ft$$

$$EV4_1 := \gamma_s \cdot \frac{1}{2} \cdot 3.5ft \cdot \left[\left(W_1 + 3ft + 5.375in\right) - \left(B_{bot.lower.1} - \frac{7in}{\cos(30deg)}\right)\right] = 0.518 \cdot \frac{kip}{ft}$$

$$x_{EV4.1} := t_{wall} + B_{bot.lower.1} + \frac{1}{3} \cdot \left[W_1 + 3ft + 5.375in - \left(B_{bot.lower.1} - \frac{7in}{\cos(30deg)}\right)\right] = 7.545\,ft$$

$$DC_{anchor.1} := \frac{1}{trib_1} \cdot \begin{cases} (1740lbf) & \text{if } AnchorType_1 = \text{"B"} \\ (2010lbf) & \text{if } AnchorType_1 = \text{"C"} \\ (2285lbf) & \text{if } AnchorType_1 = \text{"D"} \\ (2550lbf) & \text{if } AnchorType_1 = \text{"E"} \\ (2825lbf) & \text{if } AnchorType_1 = \text{"F"} \end{cases} = 0.514 \cdot \frac{kip}{ft}$$

(See Anchor Geometry Drawing)

$$x_{anchor.1} := t_{wall} + \begin{cases} (2ft + 2.25in) & \text{if } AnchorType_1 = \text{"B"} \\ (2ft + 8.8125in) & \text{if } AnchorType_1 = \text{"C"} \\ (3ft + 5.125in) & \text{if } AnchorType_1 = \text{"D"} \\ 4ft + 0.0625in & \text{if } AnchorType_1 = \text{"E"} \\ (4ft + 8in) & \text{if } AnchorType_1 = \text{"F"} \end{cases} = 5.5 \cdot ft$$

$$LS_{vert.1} := \begin{cases} \left[q_{sur} \cdot \left[B_{bot.1} - \left(d_{traffic.1}\right)\right]\right] & \text{if } d_{traffic.1} < B_{bot.1} \\ 0 & \text{otherwise} \end{cases} = 0 \cdot \frac{kip}{ft}$$

Used in bearing calcs only

$$x_{LS.vert.1} := t_{wall} + d_{traffic.1} + \frac{1}{2}\left(B_{bot.1} - d_{traffic.1}\right) = 23.094\,ft$$

$$DC_{ftg.1} := \gamma_c \cdot t_{ftg} \cdot h_{ftg} = 0 \cdot \frac{kip}{ft}$$

$$x_{DC.ftg.1} := \frac{t_{ftg}}{2} = 0.417\,ft$$

Note: This moment arm is measured from the front toe of the ftg since it is only used in bearing calculations.

Calculate Lateral Loads and Associated Lever Arms

$$EH1_{1.vert} := \frac{1}{2} k_{a.wall} \cdot \gamma_s \cdot \left(h_{backfill.1} - 3.5ft\right)^2 \cdot \sin\left(\delta_{wall}\right) = 1.574 \cdot \frac{kip}{ft}$$

$$EH1_{1.hor} := \frac{1}{2} k_{a.wall} \cdot \gamma_s \cdot \left(h_{backfill.1} - 3.5ft\right)^2 \cdot \cos\left(\delta_{wall}\right) = 3.3 \cdot \frac{kip}{ft}$$

$$x_{EH1.1} := t_{wall} + B_{bot.1} = 8.955\,ft$$

$$y_{EH1.1} := 3.5ft + \frac{1}{3}\left(h_{backfill.1} - 3.5ft\right) = 7.416\,ft$$

$$EH2_{1.vert} := k_{a.anchor} \cdot \gamma_s \cdot \left(h_{backfill.1} - 3.5ft\right) \cdot (4ft) \cdot \sin\left(\delta_{anchor} - 30deg\right) = -0.178 \cdot \frac{kip}{ft}$$

$$EH2_{1.hor} := k_{a.anchor} \cdot \gamma_s \cdot \left(h_{backfill.1} - 3.5ft\right) \cdot (4ft) \cdot \cos\left(\delta_{anchor} - 30deg\right) = 0.771 \cdot \frac{kip}{ft}$$

$$x_{EH2.1} := t_{wall} + \frac{1}{2}\left(B_{bot.1} + B_{bot.lower.1}\right) = 7.898\,ft$$

$$y_{EH2.1} := 3.5ft - \frac{1}{2} \cdot 4ft = 1.5\,ft$$

$$EH3_{1.vert} := \frac{1}{2} k_{a.anchor} \cdot \gamma_s \cdot (4ft)^2 \cdot \sin\left(\delta_{anchor} - 30deg\right) = -0.03 \cdot \frac{kip}{ft}$$

$$EH3_{1.hor} := \frac{1}{2} k_{a.anchor} \cdot \gamma_s \cdot (4ft)^2 \cdot \cos\left(\delta_{anchor} - 30deg\right) = 0.131 \cdot \frac{kip}{ft}$$

$$x_{EH3.1} := t_{wall} + B_{bot.lower.1} + \left(3.5ft - \frac{2}{3}\cdot 4ft\right)\tan(30deg) = 7.321\,ft$$

$$y_{EH3.1} := 3.5ft - \frac{2}{3}\cdot 4ft = 10\cdot in$$

$$LS_{hor.1} := \begin{cases} \left(k_{a.wall}\cdot q_{sur}\cdot h_{backfill.1}\right) & \text{if } d_{traffic.1} < \frac{h_{wall.1}}{2} \\ 0 & \text{otherwise} \end{cases} = 0\cdot\frac{kip}{ft}$$

$$x_{LS.hor.1} := t_{wall} + \frac{1}{2}\left(B_{bot.lower.1} + B_{bot.1}\right) = 7.898\,ft$$ (Assumed for ease of calculation)

$$y_{LS.hor.1} := \frac{1}{2}h_{backfill.1} = 7.625\,ft$$

Check Sliding

Per AASHTO 11.11.4.2, Sliding shall be evaluated according to 10.6.3.4. Per 11.5.3, sliding shall be evaluated at the strength limit state. Use minimum load factors for vertical loads and maximum load factors for horizontal loads. Assume the failure plane is beneath the wall ftg, which will be grouted to the wall during construction. This is consistent with assumptions in the HITEC report (page D24).

Resisting Forces

$$\phi_{\tau} := 0.9$$ AASHTO Table 10.5.5.2.2-1, "Precast on Sand" or "Soil on Soil"

$$\Sigma V_1 := 0.9\left(DC_{wall.1} + DC_{anchor.1} + DC_{ftg.1}\right) + 1.0\cdot\left(EV1a_1 + EV1b_1 + EV2_1 + EV3_1 + EV4_1\right) \ldots = 18.211\cdot\frac{kip}{ft}$$
$$+\eta_i\cdot 1.50\cdot\left(EH1_{1.vert} + EH2_{1.vert} + EH3_{1.vert}\right)$$

$$R_{\tau.1} := 0.8\cdot\tan\left(\phi_{ftg}\right)\cdot\Sigma V_1 = 10.585\cdot\frac{kip}{ft}$$ AASHTO 10.6.3.4

$$\boxed{R_{r.1} := \phi_{\tau}\cdot R_{\tau.1} = 9.526\cdot\frac{kip}{ft}}$$

Driving Forces

$$\Sigma H_{\tau.1} := \eta_i\cdot\left[1.50\cdot\left(EH1_{1.hor} + EH2_{1.hor} + EH3_{1.hor}\right) + 1.75LS_{hor.1}\right] = 6.305\cdot\frac{kip}{ft}$$

$$Check_{sliding.1} := \begin{cases} \text{"OK"} & \text{if } \frac{R_{r.1}}{\Sigma H_{\tau.1}} \geq 1 \\ \text{"NG"} & \text{otherwise} \end{cases} = \text{"OK"}$$

Check Overturning and Eccentricity

Per AASHTO 11.11.4.4, Overturning shall be evaluated according to 11.6.3.3. A maximum of 80% of the retained soil shall be used to resist overturning. Per 11.6.3.3, evaluate overturning and eccentricity at the strength limit state using maximum load factors for horizontal loads and minimum load factors for vertical loads. First, evaluate overturning about front base of wall. If the wall passes the overturning check, the wing will not experience uplift with respect to the footing. Therefore evaluate eccentricity at the bottom of the footing. The location of the resultant of the reaction forces shall be located within the middle half of the base width (footing width plus anchor projection). Eccentricity is measured from the center of the base width toward the stream side of the footing. Assume that a negative eccentricity (beyond the center of the base, toward the backfill) is acceptable since this condition will engage passive earth pressures.

Resisting Forces

$$\begin{aligned} Resisting_1 := {} & 0.9\left(DC_{wall.1}\cdot x_{DC.wall.1} + DC_{anchor.1}\cdot x_{anchor.1}\right) \ldots \\ & + 1.0\cdot 0.8\cdot\left(EV1a_1\cdot x_{EV1a.1} + EV1b_1\cdot x_{EV1b.1} + EV2_1\cdot x_{EV2.1} + EV3_1\cdot x_{EV3.1} + EV4_1\cdot x_{EV4.1}\right) \ldots \\ & + 1.50\left(EH1_{1.vert}\cdot x_{EH1.1} + EH2_{1.vert}\cdot x_{EH2.1} + EH3_{1.vert}\cdot x_{EH3.1}\right) \end{aligned} = 78.61\cdot\frac{kip\cdot ft}{ft}$$

Driving Forces

$$Driving_1 := 1.50\cdot\left(EH1_{1.hor}\cdot y_{EH1.1} + EH2_{1.hor}\cdot y_{EH2.1} + EH3_{1.hor}\cdot y_{EH3.1}\right) + 1.75LS_{hor.1}\cdot y_{LS.hor.1} = 38.616\cdot\frac{kip\cdot ft}{ft}$$

$$Check_{OT.1} := \begin{cases} \text{"OK"} & \text{if } \dfrac{Resisting_1}{Driving_1} \ge 1 \\ \text{"NG"} & \text{otherwise} \end{cases} = \text{"OK"}$$

Eccentricity of Resultant

$$\begin{aligned} \Sigma V_{e.1} := {} & 0.9\left(DC_{wall.1} + DC_{anchor.1}\right) + 1.0\cdot 0.8\cdot\left(EV1a_1 + EV1b_1 + EV2_1 + EV3_1 + EV4_1\right) \ldots \\ & + 1.50\left(EH1_{1.vert} + EH2_{1.vert} + EH3_{1.vert}\right) \end{aligned} = 15.331\cdot\frac{kip}{ft}$$

$$l_1 := \frac{\left[\Sigma V_{e.1}\cdot\left[\dfrac{\left(Resisting_1 - Driving_1\right)}{\Sigma V_{e.1}} + \dfrac{1}{2}\left(t_{ftg} - t_{wall}\right)\right] + 0.9DC_{ftg.1}\cdot x_{DC.ftg.1}\right]}{\Sigma V_{e.1} + 0.9DC_{ftg.1}} = 2.609\,ft$$

(Distance to resultant from face of ftg)

$$B_1 := B_{bot.lower.1} + t_{wall} + \frac{1}{2}\left(t_{ftg} - t_{wall}\right) = 6.84\,ft$$

$$e_1 := \max\left(\frac{B_1}{2} - l_1, 0ft\right) = 0.811\,ft$$

$$e_{allow.1} := \frac{B_1}{4} = 1.71\,ft$$

(Within Middle Half of ftg per AASHTO 11.6.3.3)

$$Check_{e.1} := \begin{cases} \text{"OK"} & \text{if } \dfrac{e_1}{e_{allow.1}} \le 1 \\ \text{"NG"} & \text{otherwise} \end{cases} = \text{"OK"}$$

Check Bearing Pressure

Per 11.11.4.3 Evaluate bearing pressure with respect to resistance calculated in 10.6.3. Per HITEC p. D24, use the horizontal portion of the anchor at its base plus the footing width. Evaluate at the strength limit state. Use 100% of the weight of the retained soil. When Live Load Surcharge is present, Strength I with maximum load factors for vertical loads and horizontal loads controls. Include the effects of live load surcharge. Since lever arms are calculated from the front face of the wall, must add to the eccentricity the distance between wall and toe of footing.

$$\begin{aligned} Resisting_{brg.1} := {} & 1.25\left(DC_{wall.1}\cdot x_{DC.wall.1} + DC_{anchor.1}\cdot x_{anchor.1}\right) \ldots \\ & + 1.35\cdot\left(EV1a_1\cdot x_{EV1a.1} + EV1b_1\cdot x_{EV1b.1} + EV2_1\cdot x_{EV2.1} + EV3_1\cdot x_{EV3.1} + EV4_1\cdot x_{EV4.1}\right) \ldots \\ & + 1.35\left(EH1_{1.vert}\cdot x_{EH1.1} + EH2_{1.vert}\cdot x_{EH2.1} + EH3_{1.vert}\cdot x_{EH3.1}\right) \ldots \\ & + 1.75\cdot\left(LS_{vert.1}\cdot x_{LS.vert.1}\right) \end{aligned} = 117.004\cdot\frac{kip\cdot ft}{ft}$$

$$Driving_{brg.1} := 1.35\left(EH1_{1.hor}\cdot y_{EH1.1} + EH2_{1.hor}\cdot y_{EH2.1} + EH3_{1.hor}\cdot y_{EH3.1}\right) + 1.75LS_{hor.1}\cdot y_{LS.hor.1} = 34.754\cdot\frac{kip\cdot ft}{ft}$$

$$\begin{aligned} \Sigma V_{brg.1} := {} & 1.25\cdot\left(DC_{wall.1} + DC_{anchor.1}\right) + 1.35\cdot\left(EV1a_1 + EV1b_1 + EV2_1 + EV3_1 + EV4_1\right) \ldots \\ & + 1.35\cdot\left(EH1_{1.vert} + EH2_{1.vert} + EH3_{1.vert}\right) + 1.75\cdot\left(LS_{vert.1}\right) \end{aligned} = 23.731\cdot\frac{kip}{ft}$$

$$l_{brg.1} := \frac{\left[\Sigma V_{brg.1}\cdot\left[\dfrac{\left(Resisting_{brg.1} - Driving_{brg.1}\right)}{\Sigma V_{brg.1}} + \dfrac{1}{2}\left(t_{ftg} - t_{wall}\right)\right] + 1.25DC_{ftg.1}\cdot x_{DC.ftg.1}\right]}{\Sigma V_{brg.1} + 1.25DC_{ftg.1}} = 3.466\,ft$$

(Distance to resultant from face of ftg)

$$e_{brg.1} := \max\left(\frac{B_1}{2} - l_{brg.1}, 0ft\right) = 0\,ft$$

$$\sigma_{foot.1} := \frac{\Sigma V_{brg.1}}{B_1 - 2\cdot e_{brg.1}} = 3.469\cdot ksf$$

Eq. 11.6.3.2-1, Rectangular Distibution for Foundations on soil

$$q_R = 10\cdot ksf$$

$$CheckBearing_1 := \begin{cases} \text{"OK"} & \text{if } \dfrac{q_R}{\sigma_{foot.1}} \ge 1 \\ \text{"NG"} & \text{otherwise} \end{cases} = \text{"OK"}$$

External Stability Analysis at Anchor 2

Calculate Vertical Loads and Associated Lever Arms ***(All Lever Arms are from Point "O")***

$$DC_{wall.2} := t_{wall} \cdot h_{wall.2} \cdot \gamma_c = 1.286 \cdot \frac{kip}{ft}$$

$$x_{DC.wall.2} := \frac{1}{2} t_{wall} = 0.417\,ft$$

$$EV1a_2 := \frac{1}{2} \gamma_s \cdot \left(h_{backfill.2} - h_{wall.2}\right) \cdot \left(d_{slope.2}\right) = 2.092 \cdot \frac{kip}{ft}$$

$$x_{EV1a.2} := t_{wall} + \frac{2}{3} d_{slope.2} = 6.248\,ft$$

$$EV1b_2 := \gamma_s \cdot \left(h_{backfill.2} - h_{wall.2}\right) \cdot \left(B_{bot.2} - d_{slope.2}\right) = 0 \cdot \frac{kip}{ft}$$

$$x_{EV1b.2} := t_{wall} + d_{slope.2} + \frac{1}{2}\left(B_{bot.2} - d_{slope.2}\right) = 8.955\,ft$$

$$EV2_2 := \gamma_s \cdot \left(h_{wall.2} - 3.5ft\right) \cdot B_{bot.2} = 7.722 \cdot \frac{kip}{ft}$$

$$x_{EV2.2} := t_{wall} + \frac{1}{2} B_{bot.2} = 4.894\,ft$$

$$EV3_2 := \gamma_s \cdot (3.5ft) \cdot \left(B_{bot.lower.2} - \frac{7in}{\cos(30deg)}\right) = 2.613 \cdot \frac{kip}{ft}$$

$$x_{EV3.2} := t_{wall} + \frac{1}{2}\left(B_{bot.lower.2} - \frac{7in}{\cos(30deg)}\right) = 3.5\,ft$$

$$EV4_2 := \gamma_s \cdot \frac{1}{2} \cdot 3.5ft \cdot \left[\left(W_2 + 3ft + 5.375in\right) - \left(B_{bot.lower.2} - \frac{7in}{\cos(30deg)}\right)\right] = 0.518 \cdot \frac{kip}{ft}$$

$$x_{EV4.2} := t_{wall} + B_{bot.lower.2} + \frac{1}{3} \cdot \left[W_2 + 3ft + 5.375in - \left(B_{bot.lower.2} - \frac{7in}{\cos(30deg)}\right)\right] = 7.545\,ft$$

$$DC_{anchor.2} := \frac{1}{trib_2} \cdot \left[\begin{array}{l} (1740lbf) \text{ if } AnchorType_2 = \text{"B"} \\ (2010lbf) \text{ if } AnchorType_2 = \text{"C"} \\ (2285lbf) \text{ if } AnchorType_2 = \text{"D"} \\ (2550lbf) \text{ if } AnchorType_2 = \text{"E"} \\ (2825lbf) \text{ if } AnchorType_2 = \text{"F"} \end{array}\right] = 0.565 \cdot \frac{kip}{ft}$$

(See Anchor Geometry Drawing)

$$x_{anchor.2} := t_{wall} + \begin{cases} (2ft + 2.25in) & \text{if } AnchorType_2 = \text{"B"} \\ (2ft + 8.8125in) & \text{if } AnchorType_2 = \text{"C"} \\ (3ft + 5.125in) & \text{if } AnchorType_2 = \text{"D"} \\ (4ft + 0.0625in) & \text{if } AnchorType_2 = \text{"E"} \\ (4ft + 8in) & \text{if } AnchorType_2 = \text{"F"} \end{cases} = 5.5 \cdot ft$$

$$LS_{vert.2} := \begin{cases} \left[q_{sur} \cdot \left[B_{bot.2} - \left(d_{traffic.2}\right)\right]\right] & \text{if } d_{traffic.2} < B_{bot.2} \\ 0 & \text{otherwise} \end{cases} = 0 \cdot \frac{kip}{ft}$$

Used in bearing calcs only

$$x_{LS.vert.2} := t_{wall} + d_{traffic.2} + \frac{1}{2}\left(B_{bot.2} - d_{traffic.2}\right) = 24.259\,ft$$

$$DC_{ftg.2} := \gamma_c \cdot t_{ftg} \cdot h_{ftg} = 0 \cdot \frac{kip}{ft}$$

$$x_{DC.ftg.2} := \frac{t_{ftg}}{2} = 0.417\,ft$$

Note: This moment arm is measured from the front toe of the ftg since it is only used in bearing calculations.

Calculate Lateral Loads and Associated Lever Arms

$$EH1_{2.vert} := \frac{1}{2} k_{a.wall} \cdot \gamma_s \cdot \left(h_{backfill.2} - 3.5ft\right)^2 \cdot \sin\left(\delta_{wall}\right) = 1.25 \cdot \frac{kip}{ft}$$

$$EH1_{2.hor} := \frac{1}{2} k_{a.wall} \cdot \gamma_s \cdot \left(h_{backfill.2} - 3.5ft\right)^2 \cdot \cos\left(\delta_{wall}\right) = 2.622 \cdot \frac{kip}{ft}$$

$$x_{EH1.2} := t_{wall} + B_{bot.2} = 8.955\,ft$$

$$y_{EH1.2} := 3.5ft + \frac{1}{3}\left(h_{backfill.2} - 3.5ft\right) = 6.99\,ft$$

$$EH2_{2.vert} := k_{a.anchor} \cdot \gamma_s \cdot \left(h_{backfill.2} - 3.5ft\right) \cdot (4ft) \cdot \sin\left(\delta_{anchor} - 30deg\right) = -0.159 \cdot \frac{kip}{ft}$$

$$EH2_{2.hor} := k_{a.anchor} \cdot \gamma_s \cdot \left(h_{backfill.2} - 3.5ft\right) \cdot (4ft) \cdot \cos\left(\delta_{anchor} - 30deg\right) = 0.687 \cdot \frac{kip}{ft}$$

$$x_{EH2.2} := t_{wall} + \frac{1}{2}\left(B_{bot.2} + B_{bot.lower.2}\right) = 7.898\,ft$$

$$y_{EH2.2} := 3.5ft - \frac{1}{2} \cdot 4ft = 1.5\,ft$$

$$EH3_{2.vert} := \frac{1}{2} k_{a.anchor} \cdot \gamma_s \cdot (4ft)^2 \cdot \sin\left(\delta_{anchor} - 30deg\right) = -0.03 \cdot \frac{kip}{ft}$$

$$EH3_{2.hor} := \frac{1}{2} k_{a.anchor} \cdot \gamma_s \cdot (4ft)^2 \cdot \cos\left(\delta_{anchor} - 30deg\right) = 0.131 \cdot \frac{kip}{ft}$$

$$x_{EH3.2} := t_{wall} + B_{bot.lower.2} + \left(3.5ft - \frac{2}{3}\cdot 4ft\right)\tan(30deg) = 7.321\,ft$$

$$y_{EH3.2} := 3.5ft - \frac{2}{3}\cdot 4ft = 10\cdot in$$

$$LS_{hor.2} := \begin{cases} \left(k_{a.wall}\cdot q_{sur}\cdot h_{backfill.2}\right) & \text{if } d_{traffic.2} < \dfrac{h_{wall.2}}{2} \\ 0 & \text{otherwise} \end{cases} = 0\cdot\frac{kip}{ft}$$

$$x_{LS.hor.2} := t_{wall} + \frac{1}{2}\left(B_{bot.lower.2} + B_{bot.2}\right) = 7.898\,ft$$ (Assumed for ease of calculation)

$$y_{LS.hor.2} := \frac{1}{2}h_{backfill.2} = 6.986\,ft$$

Check Sliding

Per AASHTO 11.11.4.2, Sliding shall be evaluated according to 10.6.3.4. Per 11.5.3, sliding shall be evaluated at the strength limit state. Use minimum load factors for vertical loads and maximum load factors for horizontal loads. Assume the failure plane is beneath the wall ftg, which will be grouted to the wall during construction. This is consistent with assumptions in the HITEC report (page D24).

Resisting Forces

$$\phi_\tau := 0.9$$ AASHTO Table 10.5.5.2.2-1, "Precast on Sand" or "Soil on Soil"

$$\Sigma V_2 := 0.9\left(DC_{wall.2} + DC_{anchor.2} + DC_{ftg.2}\right) + 1.0\cdot\left(EV1a_2 + EV1b_2 + EV2_2 + EV3_2 + EV4_2\right) \ldots = 16.204\cdot\frac{kip}{ft}$$
$$+\eta_i\cdot 1.50\cdot\left(EH1_{2.vert} + EH2_{2.vert} + EH3_{2.vert}\right)$$

$$R_{\tau.2} := 0.8\cdot\tan\left(\phi_{ftg}\right)\cdot\Sigma V_2 = 9.418\cdot\frac{kip}{ft}$$ AASHTO 10.6.3.4

$$\boxed{R_{r.2} := \phi_\tau\cdot R_{\tau.2} = 8.476\cdot\frac{kip}{ft}}$$

Driving Forces

$$\Sigma H_{\tau.2} := \eta_i\cdot\left[1.50\cdot\left(EH1_{2.hor} + EH2_{2.hor} + EH3_{2.hor}\right) + 1.75LS_{hor.2}\right] = 5.16\cdot\frac{kip}{ft}$$

$$Check_{sliding.2} := \begin{cases} \text{"OK"} & \text{if } \dfrac{R_{r.2}}{\Sigma H_{\tau.2}} \ge 1 \\ \text{"NG"} & \text{otherwise} \end{cases} = \text{"OK"}$$

Check Overturning and Eccentricity

Per AASHTO 11.11.4.4, Overturning shall be evaluated according to 11.6.3.3. A maximum of 80% of the retained soil shall be used to resist overturning. Per 11.6.3.3, evaluate overturning and eccentricity at the strength limit state using maximum load factors for horizontal loads and minimum load factors for vertical loads. First, evaluate overturning about front base of wall. If the wall passes the overturning check, the wing will not experience uplift with respect to the footing. Therefore evaluate eccentricity at the bottom of the footing. The location of the resultant of the reaction forces shall be located within the middle half of the base width (footing width plus anchor projection). Eccentricity is measured from the center of the base width toward the stream side of the footing. Assume that a negative eccentricity (beyond the center of the base, toward the backfill) is acceptable since this condition will engage passive earth pressures.

Resisting Forces

$$\begin{aligned} Resisting_2 := {} & 0.9\left(DC_{wall.2}\cdot x_{DC.wall.2} + DC_{anchor.2}\cdot x_{anchor.2}\right) \cdots \\ & + 1.0\cdot 0.8\cdot\left(EV1a_2\cdot x_{EV1a.2} + EV1b_2\cdot x_{EV1b.2} + EV2_2\cdot x_{EV2.2} + EV3_2\cdot x_{EV3.2} + EV4_2\cdot x_{EV4.2}\right) \cdots \\ & + 1.50\left(EH1_{2.vert}\cdot x_{EH1.2} + EH2_{2.vert}\cdot x_{EH2.2} + EH3_{2.vert}\cdot x_{EH3.2}\right) \end{aligned} = 68.996\cdot\frac{kip\cdot ft}{ft}$$

Driving Forces

$$Driving_2 := 1.50\cdot\left(EH1_{2.hor}\cdot y_{EH1.2} + EH2_{2.hor}\cdot y_{EH2.2} + EH3_{2.hor}\cdot y_{EH3.2}\right) + 1.75LS_{hor.2}\cdot y_{LS.hor.2} = 29.2\cdot\frac{kip\cdot ft}{ft}$$

$$Check_{OT.2} := \begin{cases} \text{"OK"} & \text{if } \dfrac{Resisting_2}{Driving_2} \ge 1 \\ \text{"NG"} & \text{otherwise} \end{cases} = \text{"OK"}$$

Eccentricity of Resultant

$$\begin{aligned} \Sigma V_{e.2} := {} & 0.9\left(DC_{wall.2} + DC_{anchor.2}\right) + 1.0\cdot 0.8\cdot\left(EV1a_2 + EV1b_2 + EV2_2 + EV3_2 + EV4_2\right) \cdots \\ & + 1.50\left(EH1_{2.vert} + EH2_{2.vert} + EH3_{2.vert}\right) \end{aligned} = 13.615\cdot\frac{kip}{ft}$$

$$l_2 := \frac{\left[\Sigma V_{e.2}\cdot\left[\dfrac{\left(Resisting_2 - Driving_2\right)}{\Sigma V_{e.2}} + \dfrac{1}{2}\left(t_{ftg} - t_{wall}\right)\right] + 0.9DC_{ftg.2}\cdot x_{DC.ftg.2}\right]}{\Sigma V_{e.2} + 0.9DC_{ftg.2}} = 2.923\,ft$$

(Distance to resultant from face of ftg)

$$B_2 := B_{bot.lower.2} + t_{wall} + \frac{1}{2}\left(t_{ftg} - t_{wall}\right) = 6.84\,ft$$

$$e_2 := \max\left(\frac{B_2}{2} - l_2, 0ft\right) = 0.497\,ft$$

$$e_{allow.2} := \frac{B_2}{4} = 1.71\,ft$$

(Within Middle Half of ftg per AASHTO 11.6.3.3)

$$Check_{e.2} := \begin{cases} \text{"OK"} & \text{if } \dfrac{e_2}{e_{allow.2}} \le 1 \\ \text{"NG"} & \text{otherwise} \end{cases} = \text{"OK"}$$

Check Bearing Pressure

Per 11.11.4.3 Evaluate bearing pressure with respect to resistance calculated in 10.6.3. Per HITEC p. D24, use the horizontal portion of the anchor at its base plus the footing width. Evaluate at the strength limit state. Use 100% of the weight of the retained soil. When Live Load Surcharge is present, Strength I with maximum load factors for vertical loads and horizontal loads controls. Include the effects of live load surcharge. Since lever arms are calculated from the front face of the wall, must add to the eccentricity the distance between wall and toe of footing.

$$\begin{aligned} Resisting_{brg.2} := {} & 1.25\left(DC_{wall.2}\cdot x_{DC.wall.2} + DC_{anchor.2}\cdot x_{anchor.2}\right) \ldots \\ & + 1.35\cdot\left(EV1a_2\cdot x_{EV1a.2} + EV1b_2\cdot x_{EV1b.2} + EV2_2\cdot x_{EV2.2} + EV3_2\cdot x_{EV3.2} + EV4_2\cdot x_{EV4.2}\right) \ldots \\ & + 1.35\left(EH1_{2.vert}\cdot x_{EH1.2} + EH2_{2.vert}\cdot x_{EH2.2} + EH3_{2.vert}\cdot x_{EH3.2}\right) \ldots \\ & + 1.75\cdot\left(LS_{vert.2}\cdot x_{LS.vert.2}\right) \end{aligned} = 103.968\cdot\frac{kip\cdot ft}{ft}$$

$$Driving_{brg.2} := 1.35\left(EH1_{2.hor}\cdot y_{EH1.2} + EH2_{2.hor}\cdot y_{EH2.2} + EH3_{2.hor}\cdot y_{EH3.2}\right) + 1.75LS_{hor.2}\cdot y_{LS.hor.2} = 26.28\cdot\frac{kip\cdot ft}{ft}$$

$$\begin{aligned} \Sigma V_{brg.2} := {} & 1.25\cdot\left(DC_{wall.2} + DC_{anchor.2}\right) + 1.35\cdot\left(EV1a_2 + EV1b_2 + EV2_2 + EV3_2 + EV4_2\right) \ldots \\ & + 1.35\cdot\left(EH1_{2.vert} + EH2_{2.vert} + EH3_{2.vert}\right) + 1.75\cdot\left(LS_{vert.2}\right) \end{aligned} = 21.223\cdot\frac{kip}{ft}$$

$$l_{brg.2} := \frac{\left[\Sigma V_{brg.2}\cdot\left[\dfrac{\left(Resisting_{brg.2} - Driving_{brg.2}\right)}{\Sigma V_{brg.2}} + \dfrac{1}{2}\left(t_{ftg} - t_{wall}\right)\right] + 1.25DC_{ftg.2}\cdot x_{DC.ftg.2}\right]}{\Sigma V_{brg.2} + 1.25DC_{ftg.2}} = 3.66\,ft$$

(Distance to resultant from face of ftg)

$$e_{brg.2} := \max\left(\frac{B_2}{2} - l_{brg.2}, 0ft\right) = 0\,ft$$

$$\sigma_{foot.2} := \frac{\Sigma V_{brg.2}}{B_2 - 2\cdot e_{brg.2}} = 3.103\cdot ksf$$

Eq. 11.6.3.2-1, Rectangular Distibution for Foundations on soil

$$q_R = 10\cdot ksf$$

$$CheckBearing_2 := \begin{cases} \text{"OK"} & \text{if } \dfrac{q_R}{\sigma_{foot.2}} \ge 1 \\ \text{"NG"} & \text{otherwise} \end{cases} = \text{"OK"}$$

External Stability Analysis at Anchor 3

Calculate Vertical Loads and Associated Lever Arms ***(All Lever Arms are from Point "O")***

$$DC_{wall.3} := t_{wall} \cdot h_{wall.3} \cdot \gamma_c = 1.127 \cdot \frac{kip}{ft}$$

$$x_{DC.wall.3} := \frac{1}{2} t_{wall} = 0.417\,ft$$

$$EV1a_3 := \frac{1}{2} \gamma_s \cdot \left(h_{backfill.3} - h_{wall.3}\right) \cdot \left(d_{slope.3}\right) = 2.092 \cdot \frac{kip}{ft}$$

$$x_{EV1a.3} := t_{wall} + \frac{2}{3} d_{slope.3} = 6.248\,ft$$

$$EV1b_3 := \gamma_s \cdot \left(h_{backfill.3} - h_{wall.3}\right) \cdot \left(B_{bot.3} - d_{slope.3}\right) = 0 \cdot \frac{kip}{ft}$$

$$x_{EV1b.3} := t_{wall} + d_{slope.3} + \frac{1}{2}\left(B_{bot.3} - d_{slope.3}\right) = 8.955\,ft$$

$$EV2_3 := \gamma_s \cdot \left(h_{wall.3} - 3.5ft\right) \cdot B_{bot.3} = 6.269 \cdot \frac{kip}{ft}$$

$$x_{EV2.3} := t_{wall} + \frac{1}{2} B_{bot.3} = 4.894\,ft$$

$$EV3_3 := \gamma_s \cdot (3.5ft) \cdot \left(B_{bot.lower.3} - \frac{7in}{\cos(30deg)}\right) = 2.613 \cdot \frac{kip}{ft}$$

$$x_{EV3.3} := t_{wall} + \frac{1}{2}\left(B_{bot.lower.3} - \frac{7in}{\cos(30deg)}\right) = 3.5\,ft$$

$$EV4_3 := \gamma_s \cdot \frac{1}{2} \cdot 3.5ft \cdot \left[\left(W_3 + 3ft + 5.375in\right) - \left(B_{bot.lower.3} - \frac{7in}{\cos(30deg)}\right)\right] = 0.518 \cdot \frac{kip}{ft}$$

$$x_{EV4.3} := t_{wall} + B_{bot.lower.3} + \frac{1}{3} \cdot \left[W_3 + 3ft + 5.375in - \left(B_{bot.lower.3} - \frac{7in}{\cos(30deg)}\right)\right] = 7.545\,ft$$

$$DC_{anchor.3} := \frac{1}{trib_3} \cdot \begin{cases} (1740lbf) & \text{if } AnchorType_3 = \text{"B"} \\ (2010lbf) & \text{if } AnchorType_3 = \text{"C"} \\ (2285lbf) & \text{if } AnchorType_3 = \text{"D"} \\ (2550lbf) & \text{if } AnchorType_3 = \text{"E"} \\ (2825lbf) & \text{if } AnchorType_1 = \text{"F"} \end{cases} = 0.514 \cdot \frac{kip}{ft}$$

(See Anchor Geometry Drawing)

$$x_{anchor.3} := t_{wall} + \begin{cases} (2ft + 2.25in) & \text{if } AnchorType_3 = \text{"B"} \\ (2ft + 8.8125in) & \text{if } AnchorType_3 = \text{"C"} \\ (3ft + 5.125in) & \text{if } AnchorType_3 = \text{"D"} \\ (4ft + 0.0625in) & \text{if } AnchorType_3 = \text{"E"} \\ (4ft + 8in) & \text{if } AnchorType_3 = \text{"F"} \end{cases} = 5.5 \cdot ft$$

$$LS_{vert.3} := \begin{cases} \left[q_{sur} \cdot \left[B_{bot.3} - \left(d_{traffic.3}\right)\right]\right] & \text{if } d_{traffic.3} < B_{bot.3} \\ 0 & \text{otherwise} \end{cases} = 0 \cdot \frac{kip}{ft}$$

Used in bearing calcs only

$$x_{LS.vert.3} := t_{wall} + d_{traffic.3} + \frac{1}{2}\left(B_{bot.3} - d_{traffic.3}\right) = 25.425\,ft$$

$$DC_{ftg.3} := \gamma_c \cdot t_{ftg} \cdot h_{ftg} = 0 \cdot \frac{kip}{ft}$$

$$x_{DC.ftg.3} := \frac{t_{ftg}}{2} = 0.417\,ft$$

Note: This moment arm is measured from the front toe of the ftg since it is only used in bearing calculations.

Calculate Lateral Loads and Associated Lever Arms

$$EH1_{3.vert} := \frac{1}{2} k_{a.wall} \cdot \gamma_s \cdot \left(h_{backfill.3} - 3.5ft\right)^2 \cdot \sin\left(\delta_{wall}\right) = 0.964 \cdot \frac{kip}{ft}$$

$$EH1_{3.hor} := \frac{1}{2} k_{a.wall} \cdot \gamma_s \cdot \left(h_{backfill.3} - 3.5ft\right)^2 \cdot \cos\left(\delta_{wall}\right) = 2.021 \cdot \frac{kip}{ft}$$

$$x_{EH1.3} := t_{wall} + B_{bot.3} = 8.955\,ft$$

$$y_{EH1.3} := 3.5ft + \frac{1}{3}\left(h_{backfill.3} - 3.5ft\right) = 6.565\,ft$$

$$EH2_{3.vert} := k_{a.anchor} \cdot \gamma_s \cdot \left(h_{backfill.3} - 3.5ft\right) \cdot (4ft) \cdot \sin\left(\delta_{anchor} - 30deg\right) = -0.139 \cdot \frac{kip}{ft}$$

$$EH2_{3.hor} := k_{a.anchor} \cdot \gamma_s \cdot \left(h_{backfill.3} - 3.5ft\right) \cdot (4ft) \cdot \cos\left(\delta_{anchor} - 30deg\right) = 0.604 \cdot \frac{kip}{ft}$$

$$x_{EH2.3} := t_{wall} + \frac{1}{2}\left(B_{bot.3} + B_{bot.lower.3}\right) = 7.898\,ft$$

$$y_{EH2.3} := 3.5ft - \frac{1}{2} \cdot 4ft = 1.5\,ft$$

$$EH3_{3.vert} := \frac{1}{2} k_{a.anchor} \cdot \gamma_s \cdot (4ft)^2 \cdot \sin\left(\delta_{anchor} - 30deg\right) = -0.03 \cdot \frac{kip}{ft}$$

$$EH3_{3.hor} := \frac{1}{2} k_{a.anchor} \cdot \gamma_s \cdot (4ft)^2 \cdot \cos\left(\delta_{anchor} - 30deg\right) = 0.131 \cdot \frac{kip}{ft}$$

$$x_{EH3.3} := t_{wall} + B_{bot.lower.3} + \left(3.5ft - \frac{2}{3}\cdot 4ft\right)\tan(30deg) = 7.321\,ft$$

$$y_{EH3.3} := 3.5ft - \frac{2}{3}\cdot 4ft = 10\cdot in$$

$$LS_{hor.3} := \begin{cases} \left(k_{a.wall}\cdot q_{sur}\cdot h_{backfill.3}\right)\cdot\cos\left(\delta_{wall}\right) & \text{if } d_{traffic.3} < \frac{h_{wall.3}}{2} \\ 0 & \text{otherwise} \end{cases} = 0\cdot\frac{kip}{ft}$$

$$x_{LS.hor.3} := t_{wall} + \frac{1}{2}\left(B_{bot.lower.3} + B_{bot.3}\right) = 7.898\,ft$$ (Assumed for ease of calculation)

$$y_{LS.hor.3} := \frac{1}{2}h_{backfill.3} = 6.347\,ft$$

Check Sliding

Per AASHTO 11.11.4.2, Sliding shall be evaluated according to 10.6.3.4. Per 11.5.3, sliding shall be evaluated at the strength limit state. Use minimum load factors for vertical loads and maximum load factors for horizontal loads. Assume the failure plane is beneath the wall ftg, which will be grouted to the wall during construction. This is consistent with assumptions in the HITEC report (page D24).

Resisting Forces

$\phi_{\tau} := 0.9$ AASHTO Table 10.5.5.2.2-1, "Precast on Sand" or "Soil on Soil"

$$\Sigma V_3 := 0.9\left(DC_{wall.3} + DC_{anchor.3} + DC_{ftg.3}\right) + 1.0\cdot\left(EV1a_3 + EV1b_3 + EV2_3 + EV3_3 + EV4_3\right) \ldots = 14.16\cdot\frac{kip}{ft}$$
$$+\eta_i\cdot 1.50\cdot\left(EH1_{3.vert} + EH2_{3.vert} + EH3_{3.vert}\right)$$

$$R_{\tau.3} := 0.8\cdot\tan\left(\phi_{ftg}\right)\cdot\Sigma V_3 = 8.23\cdot\frac{kip}{ft}$$ AASHTO 10.6.3.4

$$\boxed{R_{r.3} := \phi_{\tau}\cdot R_{\tau.3} = 7.407\cdot\frac{kip}{ft}}$$

Driving Forces

$$\Sigma H_{\tau.3} := \eta_i\cdot\left[1.50\cdot\left(EH1_{3.hor} + EH2_{3.hor} + EH3_{3.hor}\right) + 1.75LS_{hor.3}\right] = 4.133\cdot\frac{kip}{ft}$$

$$Check_{sliding.3} := \begin{cases} \text{"OK"} & \text{if } \frac{R_{r.3}}{\Sigma H_{\tau.3}} \geq 1 \\ \text{"NG"} & \text{otherwise} \end{cases} = \text{"OK"}$$

Check Overturning and Eccentricity

Per AASHTO 11.11.4.4, Overturning shall be evaluated according to 11.6.3.3. A maximum of 80% of the retained soil shall be used to resist overturning. Per 11.6.3.3, evaluate overturning and eccentricity at the strength limit state using maximum load factors for horizontal loads and minimum load factors for vertical loads. First, evaluate overturning about front base of wall. If the wall passes the overturning check, the wing will not experience uplift with respect to the footing. Therefore evaluate eccentricity at the bottom of the footing. The location of the resultant of the reaction forces shall be located within the middle half of the base width (footing width plus anchor projection). Eccentricity is measured from the center of the base width toward the stream side of the footing. Assume that a negative eccentricity (beyond the center of the base, toward the backfill) is acceptable since this condition will engage passive earth pressures.

Resisting Forces

$$\begin{aligned} Resisting_3 := {} & 0.9\left(DC_{wall.3}\cdot x_{DC.wall.3} + DC_{anchor.3}\cdot x_{anchor.3}\right) \ldots \\ & + 1.0\cdot 0.8\cdot\left(EV1a_3\cdot x_{EV1a.3} + EV1b_3\cdot x_{EV1b.3} + EV2_3\cdot x_{EV2.3} + EV3_3\cdot x_{EV3.3} + EV4_3\cdot x_{EV4.3}\right) \ldots \\ & + 1.50\left(EH1_{3.vert}\cdot x_{EH1.3} + EH2_{3.vert}\cdot x_{EH2.3} + EH3_{3.vert}\cdot x_{EH3.3}\right) \end{aligned} = 59.374\cdot\frac{kip\cdot ft}{ft}$$

Driving Forces

$$Driving_3 := 1.50\cdot\left(EH1_{3.hor}\cdot y_{EH1.3} + EH2_{3.hor}\cdot y_{EH2.3} + EH3_{3.hor}\cdot y_{EH3.3}\right) + 1.75LS_{hor.3}\cdot y_{LS.hor.3} = 21.421\cdot\frac{kip\cdot ft}{ft}$$

$$Check_{OT.3} := \begin{cases} \text{"OK"} & \text{if } \dfrac{Resisting_3}{Driving_3} \ge 1 \\ \text{"NG"} & \text{otherwise} \end{cases} = \text{"OK"}$$

Eccentricity of Resultant

$$\begin{aligned} \Sigma V_{e.3} := {} & 0.9\left(DC_{wall.3} + DC_{anchor.3}\right) + 1.0\cdot 0.8\cdot\left(EV1a_3 + EV1b_3 + EV2_3 + EV3_3 + EV4_3\right) \ldots \\ & + 1.50\left(EH1_{3.vert} + EH2_{3.vert} + EH3_{3.vert}\right) \end{aligned} = 11.862\cdot\frac{kip}{ft}$$

$$l_3 := \frac{\left[\Sigma V_{e.3}\cdot\left[\dfrac{\left(Resisting_3 - Driving_3\right)}{\Sigma V_{e.3}} + \dfrac{1}{2}\left(t_{ftg} - t_{wall}\right)\right] + 0.9DC_{ftg.3}\cdot x_{DC.ftg.3}\right]}{\Sigma V_{e.3} + 0.9DC_{ftg.3}} = 3.2\,ft$$

(Distance to resultant from face of ftg)

$$B_3 := B_{bot.lower.3} + t_{wall} + \frac{1}{2}\left(t_{ftg} - t_{wall}\right) = 6.84\,ft$$

$$e_3 := \max\left(\frac{B_3}{2} - l_3, 0ft\right) = 0.22\,ft$$

$$e_{allow.3} := \frac{B_3}{4} = 1.71\,ft$$

(Within Middle Half of ftg per AASHTO 11.6.3.3)

$$Check_{e.3} := \begin{cases} \text{"OK"} & \text{if } \dfrac{e_3}{e_{allow.3}} \le 1 \\ \text{"NG"} & \text{otherwise} \end{cases} = \text{"OK"}$$

Check Bearing Pressure

Per 11.11.4.3 Evaluate bearing pressure with respect to resistance calculated in 10.6.3. Per HITEC p. D24, use the horizontal portion of the anchor at its base plus the footing width. Evaluate at the strength limit state. Use 100% of the weight of the retained soil. When Live Load Surcharge is present, Strength I with maximum load factors for vertical loads and horizontal loads controls. Include the effects of live load surcharge. Since lever arms are calculated from the front face of the wall, must add to the eccentricity the distance between wall and toe of footing.

$$\begin{aligned} Resisting_{brg.3} := {} & 1.25\left(DC_{wall.3}\cdot x_{DC.wall.3} + DC_{anchor.3}\cdot x_{anchor.3}\right) \ldots \\ & + 1.35\cdot\left(EV1a_3\cdot x_{EV1a.3} + EV1b_3\cdot x_{EV1b.3} + EV2_3\cdot x_{EV2.3} + EV3_3\cdot x_{EV3.3} + EV4_3\cdot x_{EV4.3}\right) \ldots \\ & + 1.35\left(EH1_{3.vert}\cdot x_{EH1.3} + EH2_{3.vert}\cdot x_{EH2.3} + EH3_{3.vert}\cdot x_{EH3.3}\right) \ldots \\ & + 1.75\cdot\left(LS_{vert.3}\cdot x_{LS.vert.3}\right) \end{aligned} = 90.675\cdot\frac{kip\cdot ft}{ft}$$

$$Driving_{brg.3} := 1.35\left(EH1_{3.hor}\cdot y_{EH1.3} + EH2_{3.hor}\cdot y_{EH2.3} + EH3_{3.hor}\cdot y_{EH3.3}\right) + 1.75LS_{hor.3}\cdot y_{LS.hor.3} = 19.279\cdot\frac{kip\cdot ft}{ft}$$

$$\begin{aligned} \Sigma V_{brg.3} := {} & 1.25\cdot\left(DC_{wall.3} + DC_{anchor.3}\right) + 1.35\cdot\left(EV1a_3 + EV1b_3 + EV2_3 + EV3_3 + EV4_3\right) \ldots \\ & + 1.35\cdot\left(EH1_{3.vert} + EH2_{3.vert} + EH3_{3.vert}\right) + 1.75\cdot\left(LS_{vert.3}\right) \end{aligned} = 18.637\cdot\frac{kip}{ft}$$

$$l_{brg.3} := \frac{\left[\Sigma V_{brg.3}\cdot\left[\dfrac{\left(Resisting_{brg.3} - Driving_{brg.3}\right)}{\Sigma V_{brg.3}} + \dfrac{1}{2}\left(t_{ftg} - t_{wall}\right)\right] + 1.25DC_{ftg.3}\cdot x_{DC.ftg.3}\right]}{\Sigma V_{brg.3} + 1.25DC_{ftg.3}} = 3.831\,ft$$

(Distance to resultant from face of ftg)

$$e_{brg.3} := \max\left(\frac{B_3}{2} - l_{brg.3}, 0ft\right) = 0\,ft$$

$$\sigma_{foot.3} := \frac{\Sigma V_{brg.3}}{B_3 - 2\cdot e_{brg.3}} = 2.725\cdot ksf$$

Eq. 11.6.3.2-1, Rectangular Distibution for Foundations on soil

$$q_R = 10\cdot ksf$$

$$CheckBearing_3 := \begin{cases} \text{"OK"} & \text{if } \dfrac{q_R}{\sigma_{foot.3}} \ge 1 \\ \text{"NG"} & \text{otherwise} \end{cases} = \text{"OK"}$$

Check Wall Reinforcement

Assume the wall stem is cantilevered above the anchor. Use tallest wall section above anchor. Use maximum horizontal load factors to calculate moments and shears. Use minimum load factor for axial compression.

Calculate Horizontal Loads and resp. Lever Arms at top of Anchor

$h_{wall.internal} := h_{backfill.1} - 3.5ft = 11.749\,ft$

$EH_{wall} := \frac{1}{2} k_{a.wall} \cdot \gamma_s \cdot h_{wall.internal}^2 = 3.657 \cdot \frac{kip}{ft}$ $\qquad y_{EH.wall} := \frac{1}{3} h_{wall.1} = 3.856\,ft$

$LS_{wall} := \begin{cases} 0 & \text{if } d_{traffic.1} \geq \frac{1}{2} \cdot h_{wall.1} \\ \left(k_{a.wall} \cdot q_{sur} \cdot h_{wall.internal}\right) & \text{otherwise} \end{cases} = 0 \cdot \frac{kip}{ft}$ $\qquad y_{LS.wall} := \frac{1}{2} h_{wall.1} = 5.784\,ft$

$Mu_{wall} := \eta_i \cdot \left(1.5 \cdot EH_{wall} \cdot y_{EH.wall} + 1.75 LS_{wall} \cdot y_{LS.wall}\right) = 21.152 \cdot \frac{kip \cdot ft}{ft}$

$Vu_{wall} := \eta_i \cdot \left(1.5 EH_{wall} + 1.75 LS_{wall}\right) = 5.485 \cdot \frac{kip}{ft}$

$Nu_{wall} := -\eta_i \cdot \left(0.9 \cdot \gamma_c \cdot t_{wall} \cdot h_{wall.internal}\right) = -1.322 \cdot \frac{kip}{ft}$

Check Moment Capacity

$bar_{wall} := 6$ $\qquad s_{wall} := 8in$ $\qquad cover_{wall} := 1.5in$

$b_w := 1ft$

$diam_{wall} := \frac{bar_{wall}}{8} in = 0.75 \cdot in$

$As_{wall} := \frac{\pi \cdot diam_{wall}^2}{4} \cdot 12 \frac{in}{s_{wall}} = 0.663 \cdot in^2$

$d_{wall} := t_{wall} - cover_{wall} - \frac{diam_{wall}}{2} = 8.125 \cdot in$

$\phi_{moment} := 0.90$ Per AASHTO 5.5.4.2.1

$\phi_{shear} := 0.90$ Per AASHTO 5.5.4.2.1

Verify that f_y can be substituted for f_s in the equations of 5.7.3.2. This is allowed when $\frac{c}{d_s} \le 0.60$.

$c_{wall} := \frac{As_{wall} \cdot f_y}{0.85 \cdot f_c \cdot \beta_1 \cdot b_w} = 0.975 \cdot in$ Simplified equation 5.7.3.1.2-4

$\frac{c_{wall}}{d_{wall}} = 0.12$ **This is less than 0.60 therefore f_y can be substituted for f_s**

$a_{wall} := \beta_1 \cdot c_{wall} = 0.78 \cdot in$

$Mn_{wall} := As_{wall} \cdot f_y \cdot \left(d_{wall} - \frac{a_{wall}}{2} \right)$

$Mr_{wall} := \phi_{moment} \cdot Mn_{wall} = 23.067 \cdot kip \cdot ft$

$Mu_{wall} \cdot b_w = 21.152 \cdot kip \cdot ft$

$$Check_{WallFlexure} := \begin{cases} \text{"OK"} & \text{if } \frac{Mr_{wall}}{Mu_{wall} \cdot b_w} \ge 1 \\ \text{"NG"} & \text{otherwise} \end{cases} = \text{"OK"}$$

<u>Check Minimum Flexural Reinforcement (5.7.3.3.2)</u>

$f_r := 0.24 \cdot \sqrt{f_c \cdot ksi} = 0.537 \cdot ksi$ AASHTO 5.4.2.6

$I_{g.wall} := \frac{1}{12} \cdot b_w \cdot t_{wall}^3 = 1 \times 10^3 \cdot in^4$

$y_{t.wall} := \frac{t_{wall}}{2} = 5 \cdot in$ Distance from centroid to extreme tension fibers. Conservatively ignore reinforcement.

$S_{c.wall} := \frac{I_{g.wall}}{y_{t.wall}} = 200 \cdot in^3$

$\gamma_3 := 0.67$ 0.67 = Factor for Grade 60 ASTM A615 rebar

$\gamma_1 := 1.2$ 1.2 = Factor for precast segmental structures

$M_{cr.wall} := \gamma_3 \cdot \gamma_1 \cdot S_{c.wall} \cdot f_r = 7.191 \cdot kip \cdot ft$ Simplified AASHTO Eq 5.7.3.3.2-1

$1.33 Mu_{wall} \cdot b_w = 28.132 \cdot kip \cdot ft$

$$Check_{MinSteelWall} := \begin{cases} \text{"OK"} & \text{if } Mr_{wall} \ge \min\left(1.33 Mu_{wall} \cdot b_w, M_{cr.wall}\right) \\ \text{"NG"} & \text{otherwise} \end{cases} = \text{"OK"}$$

Shear Resistance at Bottom of Wall (Section 5.8.3.4.2)

The section contains less than the minimum transverse reinforcement specified in 5.8.2.5, therefore use equation 5.8.3.4.2-2 to determine the longitudinal strain effect factor (β) at the location of maximum shear.

$Mu := \max(Mu_{wall}, Vu_{wall} \cdot d_{wall})$ In the eqtn below Mu shall not be less than $Vu \cdot d_v$

$$\xi_{s_wall} := \frac{\frac{|Mu|}{d_{wall}} + 0.5Nu_{wall} + |Vu_{wall}|}{E_s \cdot As_{wall}} \cdot b_w \qquad 1000 \cdot \xi_{s_wall} = 1.88 \qquad (5.8.3.4.2\text{-}4)$$

$s_{x_wall} := d_{wall}$

$$s_{xe_wall} := s_{x_wall} \cdot \frac{1.38in}{Aggregate_{diam} + 0.63in} = 8.125 \cdot in \qquad (5.8.3.4.2\text{-}5)$$

$$\beta_{wall} := \left(\frac{4.8}{1 + 750 \cdot \xi_{s_wall}}\right) \cdot \left(\frac{51}{39 + \frac{s_{xe_wall}}{1in}}\right) = 2.158 \qquad (5.8.3.4.2\text{-}2)$$

$$\Theta_{wall} := 29deg + 3500deg \cdot \xi_{s_wall} = 35.568 \cdot deg \qquad (5.8.3.4.2\text{-}3)$$

$$Vn_{wall} := \min\left(0.25 \cdot f_c \cdot b_w \cdot d_{wall}, 0.0316 \cdot \beta_{wall} \cdot \sqrt{f_c \cdot ksi} \cdot b_w \cdot d_{wall}\right) = 14.866 \cdot kip \qquad (5.8.3.3)$$

$Vr_{wall} := \phi_{shear} \cdot Vn_{wall} = 13.379 \cdot kip$

$Vu_{wall} \cdot b_w = 5.485 \cdot kip$

$$Check_{WallShear} := \begin{cases} \text{"OK"} & \text{if } \frac{Vr_{wall}}{Vu_{wall} \cdot b_w} \geq 1 \\ \text{"NG"} & \text{otherwise} \end{cases} = \text{"OK"}$$

Check Crack Control in Section 5.7.3.4

Stress in reinforcement calculated per MacGregor "Reinforced Concrete Mechanics and Design" 4th Ed

$$Ms_{wall} := \eta_i \cdot \left(1.0 \cdot EH_{wall} \cdot y_{EH.wall} + 1.0LS_{wall} \cdot y_{LS.wall}\right) = 14.101 \cdot \frac{kip \cdot ft}{ft}$$

$$Ns_{wall} := -\eta_i \cdot \left(1.0 \cdot \gamma_c \cdot t_{wall} \cdot h_{wall.internal}\right) = -1.469 \cdot \frac{kip}{ft}$$

$$\eta := \frac{E_s}{E_c} = 7.118$$

$$\rho_{wall} := \frac{As_{wall}}{b_w \cdot d_{wall}} = 0.007$$

$$k := \sqrt{2\rho_{wall} + \left(\rho_{wall} \cdot \eta\right)^2} - \rho_{wall} \cdot \eta$$

$$j_{wall} := 1 - \frac{k}{3} = 0.974$$

$$fss_{wall} := \frac{Ms_{wall} + Ns_{wall} \cdot \left(d_{wall} - \frac{t_{wall}}{2}\right)}{As_{wall} \cdot j_{wall} \cdot d_{wall}} = 31.39 \cdot \frac{ksi}{ft}$$

Stress in Reinforcement at Service Limit State

$$d_{c_wall} := t_{wall} - d_{wall} = 1.875 \cdot in$$

$$\beta_s := 1 + \frac{d_{c_wall}}{0.7 \cdot \left(t_{wall} - d_{c_wall}\right)} = 1.33$$

$$\gamma_e := 1.00$$

exposure factor

$$s_{max} := \frac{700 \frac{kip}{in} \cdot \gamma_e}{\beta_s \cdot fss_{wall} \cdot b_w} - 2 \cdot d_{c_wall} = 13.021 \cdot in$$

$$Check_{MaxSpacing} := \begin{cases} \text{"OK"} & \text{if } s_{wall} \le s_{max} \\ \text{"NG"} & \text{otherwise} \end{cases} = \text{"OK"}$$

Check Minimum Bar Spacing in Section 5.10.3.1.2:

$$s_{min} := \max\left(diam_{wall}, 1.33 Aggregate_{diam}, 1in\right) = 1 \cdot in$$

$$Check_{MinSpacing} := \begin{cases} \text{"OK"} & \text{if } s_{wall} \ge s_{min} \\ \text{"NG"} & \text{otherwise} \end{cases} = \text{"OK"}$$

Check Maximum Bar Spacing in Section 5.10.3.2:

$$s_{max} := \min\left(1.5 \cdot t_{wall}, 18in\right) = 15 \cdot in$$

$$Check_{MaxSpacing} := \begin{cases} \text{"OK"} & \text{if } s_{wall} \le s_{max} \\ \text{"NG"} & \text{otherwise} \end{cases} = \text{"OK"}$$

Check Anchor Attachment to Wall

Check Moment Capacity of Connection Bars

Conservatively assume the entire wall is cantilevered about the footing, therefore consider only driving moments. Use total loads instead of loads per foot. Use 100% of soil weight. Must determine controlling anchor, since tributary width is variable, not necessarily the anchor at the tallest wall. Assume only top four connection bars resist tension. This assumption is consistent with HITEC p.D28.

$Mu_{anchor} := \max(Driving_{brg.1} \cdot trib_1, Driving_{brg.2} \cdot trib_2, Driving_{brg.3} \cdot trib_3) = 191.147 \cdot kip \cdot ft$

$bar_{anchor} := 5$ size of bar

$diam_{anchor} := \frac{bar_{anchor}}{8} in = 0.625 \cdot in$

$As_{anchor} := \frac{\pi}{4} \cdot diam_{anchor}^2 = 0.307 \cdot in^2$

$n := 6$ Number of bars in tension

$b_{anchor} := t_{stem} = 6 \cdot in$ thickness of anchor stem

$h_{stem} := 3ft + 6in$ height of anchor stem

$d_{anchor} := 30.5in$ distance from centroid of tension reinforcement extreme compression fiber.

Verify that f_y can be substituted for f_s in the equations of 5.7.3.2. This is allowed when $\frac{c}{d_s} \le 0.60$.

$c_{anchor} := \frac{n \cdot As_{anchor} \cdot f_y}{0.85 \cdot f_c \cdot \beta_1 \cdot b_{anchor}} = 5.414 \cdot in$ Simplified equation 5.7.3.1.2-4

$\frac{c_{anchor}}{d_{anchor}} = 0.178$ **This is less than 0.60 therefore f_y can be substituted for f_s**

$a_{anchor} := \beta_1 \cdot c_{anchor} = 4.331 \cdot in$

$Mn_{anchor} := n \cdot As_{anchor} \cdot f_y \cdot \left(d_{anchor} - \frac{a_{anchor}}{2}\right)$

$Mr_{anchor} := \phi_{moment} \cdot Mn_{anchor} = 234.708 \cdot kip \cdot ft$

$Mu_{anchor} = 191.147 \cdot kip \cdot ft$

$$Check_{AnchorFlexure} := \begin{cases} \text{"OK"} & \text{if } \frac{Mr_{anchor}}{Mu_{anchor}} \ge 1 \\ \text{"NG"} & \text{otherwise} \end{cases} = \text{"OK"}$$

Check Minimum Flexural Reinforcement (5.7.3.3.2)

$f_r = 0.537 \cdot ksi$ AASHTO 5.4.2.6

$I_{g.anchor} := \frac{1}{12} \cdot t_{stem} \cdot h_{stem}^3 = 3.704 \times 10^4 \cdot in^4$

$y_{t.anchor} := \frac{h_{stem}}{2} = 1.75\,ft$ Distance from centroid to extreme tension fibers. Conservatively ignore reinforcement.

$S_{c.anchor} := \frac{I_{g.anchor}}{y_{t.anchor}} = 1.764 \times 10^3 \cdot in^3$

$\gamma_3 := 0.67$ 0.67 = Factor for Grade 60 ASTM A615 rebar

$\gamma_1 := 1.2$ 1.2 = Factor for precast segmental structures

$M_{cr.anchor} := \gamma_3 \cdot \gamma_1 \cdot S_{c.anchor} \cdot f_r = 63.426 \cdot kip \cdot ft$ Simplified AASHTO Eq 5.7.3.3.2-1

$1.33Mu_{anchor} \cdot b_w = 254.225\,ft \cdot kip \cdot ft$

$$Check_{MinSteelAnchor} := \begin{cases} \text{"OK"} & \text{if } Mr_{anchor} \geq \min(1.33Mu_{anchor}, M_{cr.anchor}) \\ \text{"NG"} & \text{otherwise} \end{cases} = \text{"OK"}$$

Check Minimum Steel for Temperature and Shrinkage (11.6.1.5.1 & 5.10.8)

$$As_{min.anchor} := \max\left[0.11\frac{in^2}{ft}, \min\left[0.60\frac{in^2}{ft}, \frac{1.30 \cdot b_{anchor} \cdot h_{stem}}{2 \cdot (b_{anchor} + h_{stem}) \cdot \frac{f_y}{ksi}}\right]\right] = 0.6 \cdot \frac{in^2}{ft}$$

$As_{min.anchor} \cdot h_{stem} = 2.1 \cdot in^2$

$As_{anchor} \cdot (n + 2) = 2.454 \cdot in^2$ Account for extra two bars in compression face

Check Hook Development of Connection Steel in Wall

Per 5.10.2, A standard hook with a 180 degree bend shall have a 4*db extension, but not less than 2.5 inches. Per 5.12.3, Cover beyond free end of bar shall be 2 inches.

$$l_{hb} := \frac{38.0 diam_{anchor}}{\sqrt{\left(\frac{f_c}{ksi}\right)}} = 10.621 \cdot in$$

Basic development length for a Grade 60 bar with a standard hook (AASHTO 5.11.2.4.1)

Modification Factors to be applied to the Basic Development Length (AASHTO 5.11.2.4.2)

$M_{strength} := 1$ — Increase by fy/60 for yield strength greater than 60ksi

$M_{cover} := 0.7$ — 0.7 if side cover normal to plane of hook is at least 2.5 inches AND Cover beyond hook is at least 2.0in

$M_{stirrups} := 1.0$ — 0.8 if hook is enclose in with ties or stirrups as specified in 5.11.2.4.2

$M_{As} := 1.0$ — Conservatively assume entire area of steel provided is required.

$M_{lightweight} := 1.0$ — 1.3 if lightweight concrete is used.

$M_{epoxy} := 1.0$ — 1.2 if epoxy rebar is used.

$$M := M_{strength} \cdot M_{cover} \cdot M_{stirrups} \cdot M_{As} \cdot M_{lightweight} \cdot M_{epoxy} = 0.7$$

$$l_{dh} := \max(6in, 8 \cdot diam_{anchor}, M \cdot l_{hb}) = 7.435 \cdot in$$

$$t_{wall.min} := cover_{wall} + l_{dh} = 8.935 \cdot in$$

$$Check_{Wall.Thickness} := \begin{cases} \text{"OK"} & \text{if } t_{wall} \geq t_{wall.min} \\ \text{"NG"} & \text{otherwise} \end{cases} = \text{"OK"}$$

Design/Analysis References:

1. AASHTO LRFD Bridge Design Specifications, 6th Edition.
2.
3. Das, Principles of Foundation Engineering, 5th Edition.
4. Holtz & Kovacs, Introduction to Geotechnical Engineering
5. AISC, Steel Construction Manual, 13th Edition
6. Highway Innovative Technology Evaluation Center (HITEC), Evaluation of the Con/Span Wingwall System, CERF Report #40580, July 2001.
7. Contract Plans (VAOT)

Assumptions:

1. It is assumed that the failure plane of the soil to be retained by this wall will lie within the proposed backfill material.
2. The proposed backfill material will meet the material requirements of the contract plans and be constructed to meet the requirements of the contract documents. This material is assumed to have a friction angle = 34 degrees and a dry unit weight = 140 pcf.
3. The installation of the weepholes will preclude the development of hydrostatic pressures on the wall.
4. Passive earth pressure in front of the wall is ignored per AASHTO 11.6.3.5.
5. Site Layout. Roadway Skew 35 degrees. (3) wingwall designs due to varying design height and backfill slope.
6. Backslope Angle. WW1 2:1 at 25 degrees. WW2 and WW3 flat. WW4 flat then 2:1 - Use 5:1 for design. Use infinite backslopes for designs (Break_In_Slope = 0, see below).
7. Live Load Surcharge. N/A - traffic is well belond H/2 for all cases.
8. The HITEC Evaluation (page 3) explains that the Anchor Wall acts as a cantilever wall for most of its length since the weight of the soil within and above the anchors provides resistance to overturning. The wall also has attributes of a bin wall since arching and friction of soil masses between anchors provides additional resistance. Therefore, the provisions of AASHTO Sections 11.6 (Conventional Retaining Walls) and 11.11 (Modular Walls) shall be applied.
9. Per AASHTO 11.11.4.4, a maximum of 80% of the weight of the retained soil is effective in resisting overturning. The HITEC Evaluation (pages D29-D33) evaluated the accuracy of this assumption and found that using 80% of the soil weight is a conservative assumption.
10. The Top of Wingwall elevations are 2 inches below the top of headwall elevations.

General Input:

$ELV_{walltop} := 1006ft - 2in = 1005.83\,ft$	Elevation of the Wingwall at its tallest point
$ELV_{walltip} := 1000ft$	Elevation of Wingwall at its tip.
$ELV_{bot.ftg} := 993.67ft$	Elevation of the Bottom of the Wall Footing
$t_{ftg} := 10in$	Pedestal Footing design, separate, so t.wall
$h_{ftg} := 0ft$	Pedestal Footing design, separate
$h_{short} := ELV_{walltip} - ELV_{bot.ftg} - h_{ftg} - 1in = 6.247\,ft$	Short end of wall (less 1" for shim)
$h_{tall} := ELV_{walltop} - ELV_{bot.ftg} - h_{ftg} - 1in = 12.08\,ft$	Tall end of wall (less 1" for shim)
$l_{wall} := 11ft$	Length of Wall Panel
$l_{flat} := 1ft$	Length of flat portion of wingwall before break in slope.
$t_{wall} := 10in$	Thickness of Wall Panel
$t_{stem} := 6in$	Thickness of Anchor Stem
$w_{flange} := 2ft + 6in$	Width of Anchor Flange
$\alpha_{skew} := 0deg$	Angle of ww skew in plan view, measured from edge of roadway. (to measure distance to traffic for each anchor)
$\theta_{wall} := 90deg$	Wall batter angle with horizontal
$\theta_{anchor} := \theta_{wall} + 30deg$	Anchor batter angle with horizontal
$\beta := 0deg$	Backfill slope angle with horizontal, measured perpendicular to the wall.
$d_{traffic} := 35ft$	Estimated minimum distance to traffic, measured from backfill side of wall and perpendicular to the wall.
$BreakInSlope := 0ft$	Assumed distance from face of guardrail to break-in-slope, meaured perpendicular to the wall.

Wall Material Properties

Concrete

$f_c := 5000 \frac{lbf}{in^2}$ $E_c := 4074ksi$ $Aggregate_{diam} := .75in$

$\gamma_c := 150pcf$ Assumed unit weight of concrete panel.

β_1 = Stress Block Factor specified in Article 5.7.2.2

$$\beta_1 := \max\left[.65, \left[\begin{array}{l} .85 \quad \text{if } f_c < 4000psi \\ .85 - \frac{.05}{psi} \cdot \left(\frac{f_c - 4000psi}{1000}\right) \quad \text{otherwise} \end{array}\right]\right] = 0.8$$

Steel:

$f_y := 60000 \frac{lbf}{in^2}$ $E_s := 29000ksi$

Soil:

$q_R := 10ksf$ Minimum factored bearing resistance given in contract, sht 6

$\gamma_s := 140pcf$ Assumed soil unit weight for all soil

$q_{sur} := 2ft \cdot \gamma_s = 280 \cdot psf$ Surcharge Soil Pressure (AASHTO Tbl 3.11.6.4-2)

$\phi_{ftg} := 36deg$ Friction Angle of Soil below Wall Footing

$\phi_{backfill} := 34deg$ Friction Angle of Backfill Soil

$\delta_{wall} := 0.75 \cdot \phi_{backfill} = 25.5 \cdot deg$ AASHTO C3.11.5.9-1 and HITEC p.D19

$\delta_{anchor} := 0.50 \cdot \phi_{backfill} = 17 \cdot deg$ AASHTO C3.11.5.9-1 and HITEC p.D19

$$k_{a.wall} := \frac{\sin(\theta_{wall} + \phi_{backfill})^2}{\sin(\theta_{wall})^2 \cdot \sin(\theta_{wall} - \delta_{wall}) \cdot \left(1 + \sqrt{\frac{\sin(\phi_{backfill} + \delta_{wall}) \cdot \sin(\phi_{backfill} - \beta)}{\sin(\theta_{wall} - \delta_{wall}) \cdot \sin(\theta_{wall} + \beta)}}\right)^2} = 0.254$$

AASHTO 3.11.5.3

$$k_{a.anchor} := \frac{\sin(\theta_{anchor} + \phi_{backfill})^2}{\sin(\theta_{anchor})^2 \cdot \sin(\theta_{anchor} - \delta_{anchor}) \cdot \left(1 + \sqrt{\frac{\sin(\phi_{backfill} + \delta_{anchor}) \cdot \sin(\phi_{backfill} - \beta)}{\sin(\theta_{anchor} - \delta_{anchor}) \cdot \sin(\theta_{anchor} + \beta)}}\right)^2} = 0.089$$

AASHTO 3.11.5.3

$$k_0 := 1 - \sin(\phi_{backfill}) = 0.441$$

AASHTO 3.11.5.2-1

Determine Load Factors (Strength I) (AASHTO 1.3 and Table 3.4.1-1)

Load Modifiers

$\eta_D := 1.00$ Ductility for a conventional design

$\eta_R := 1.00$ Redundancy for conventional design

$\eta_I := 1.00$ Importance for a conventional bridge

$\eta_i := \max(\eta_D \cdot \eta_R \cdot \eta_I, 0.95)$ $\eta_i = 1$

Load Factor	Max	Min	Service	
γ_{DC}	1.25	0.9	1.0	Component Dead Loads
γ_{EH}	1.5	0.9	1.0	Horizontal Earth Loads
γ_{EV}	1.35	1.0	1.0	Vertical Earth Loads
γ_{LL}	1.75	1.75	1.0	Live Loads

Anchor Types, Layout and Backfill Geometry

$ConnectedToBridge := \text{"No"}$

To account for the connection of the wing to the bridge. Choose between Yes and No.

$AnchorType_1 := \text{"C"}$

$AnchorType_2 := \text{"C"}$

$AnchorType_3 := \text{"C"}$

Anchor Type to be tied to the back face of the wall. Chosen between Anchor Type B, C, D, and E as defined below.

$dist_{anchor.1} := 3ft$

$dist_{anchor.2} := 8ft$

$dist_{anchor.3} := 0$

Distance to each anchor is from culvert end of wing. Anchor 1 is closest to culvert.

Note: Research in HITEC report supports spacing from 2.5 ft (anchors are touching) to 5.5 feet (HITEC Report pages D29-D33). If distance between anchors increases beyond 5.5 ft, data supporting the usable 80% soil weight assumption shall be provided due to possible affects on soil arching between the anchors. Similarly, anchor closest to the wall tip shall not exceed 3 feet without supporting data.

If only 1 anchor is used, set $dist_{anchor2} = dist_{anchor3} = 0$.

If only 2 anchors are used, set $dist_{anchor3} = 0$.

Tributary Width of Wall for each Anchor

$$trib_{plates} := \begin{cases} 0 & \text{if } ConnectedToBridge = \text{"No"} \\ \frac{1}{2} \cdot dist_{anchor.1} & \text{otherwise} \end{cases} = 0\,ft$$

$$trib_1 := \begin{cases} l_{wall} - trib_{plates} & \text{if } dist_{anchor.2} = 0 \\ \frac{1}{2} \cdot \left(dist_{anchor.1} + dist_{anchor.2}\right) - trib_{plates} & \text{otherwise} \end{cases} = 5.5\,ft$$

$$trib_2 := \begin{cases} \left[l_{wall} - \frac{1}{2}\left(dist_{anchor.1} + dist_{anchor.2}\right)\right] & \text{if } dist_{anchor.3} = 0 \\ \frac{1}{2}\left(dist_{anchor.2} + dist_{anchor.3}\right) - \frac{1}{2}\left(dist_{anchor.1} + dist_{anchor.2}\right) & \text{otherwise} \end{cases} = 5.5\,ft$$

$$trib_3 := l_{wall} - \left(trib_1 + trib_2 + trib_{plates}\right) = 0\,ft$$

Height of Wall at CL of Each Anchor

$$h(x) := \begin{cases} 0 & \text{if } x = 0 \\ h_{tall} & \text{if } 0 < x \le l_{flat} \\ \left[h_{tall} - \left(\frac{h_{tall} - h_{short}}{l_{wall} - l_{flat}}\right)\cdot\left(x - l_{flat}\right)\right] & \text{otherwise} \end{cases}$$

$h_{wall.1} := h\left(dist_{anchor.1}\right) = 10.913\,ft$

$h_{wall.2} := h\left(dist_{anchor.2}\right) = 7.997\,ft$

$h_{wall.3} := h\left(dist_{anchor.3}\right) = 0\,ft$

Height of wall at each anchor

Length of each Anchor Stem Extension

$$W(x) := \begin{cases} (0ft) & \text{if } x = \text{"B"} \\ (1ft) & \text{if } x = \text{"C"} \\ (2ft) & \text{if } x = \text{"D"} \\ (3ft) & \text{if } x = \text{"E"} \end{cases}$$

W is the additional anchor stem length beyond that of a "B" anchor. W(B) = 0

$W_1 := W\left(AnchorType_1\right) = 1\,ft$

$W_2 := W\left(AnchorType_2\right) = 1\,ft$

$W_3 := W\left(AnchorType_3\right) = 1\,ft$

Width of Soil Column above each Anchor

B_{bot} is the width of the soil column at the top of the anchor, measured from backfill side of wall to upper tip of each anchor.

$$B_{bot.1} := W_1 + (3ft + 5.375in) + \frac{7in}{\cos(30deg)} = 5.121\,ft$$

$$B_{bot.2} := W_2 + (3ft + 5.375in) + \frac{7in}{\cos(30deg)} = 5.121\,ft$$

$$B_{bot.3} := W_3 + (3ft + 5.375in) + \frac{7in}{\cos(30deg)} = 5.121\,ft$$

$B_{bot.lower}$ is the width of the soil column at the bottom of the anchor, measured from backfill side of wall to bottom tip of anchor.

$$B_{bot.lower.1} := W_1 + \left(1ft + 4in + \frac{7in}{\cos(30deg)}\right) = 3.007\,ft$$

$$B_{bot.lower.2} := W_2 + \left(1ft + 4in + \frac{7in}{\cos(30deg)}\right) = 3.007\,ft$$

$$B_{bot.lower.3} := W_3 + \left(1ft + 4in + \frac{7in}{\cos(30deg)}\right) = 3.007\,ft$$

Perpendicular Distance to Traffic at each Anchor

$$d_{traffic.1} := d_{traffic} + dist_{anchor.1} \cdot \tan(\alpha_{skew}) = 35\,ft$$

$$d_{traffic.2} := d_{traffic} + dist_{anchor.2} \cdot \tan(\alpha_{skew}) = 35\,ft$$

$$d_{traffic.3} := d_{traffic} + dist_{anchor.3} \cdot \tan(\alpha_{skew}) = 35\,ft$$

Height of backfill at CL of each anchor

$$d_{slope.1} := \max(0, \min(B_{bot.1}, d_{traffic.1} - BreakInSlope)) = 5.121\,ft$$

$$d_{slope.2} := \max(0, \min(B_{bot.2}, d_{traffic.2} - BreakInSlope)) = 5.121\,ft$$

$$d_{slope.3} := \max(0, \min(B_{bot.3}, d_{traffic.3} - BreakInSlope)) = 5.121\,ft$$

Distance to break in slope, measured perpendicular to wall from inside face of wall, limited by B.bot.

$$h_{backfill.1} := \max(h_{wall.1}, h_{wall.1} + \min(B_{bot.1}, d_{slope.1}) \cdot \tan(\beta)) = 10.913\,ft$$

$$h_{backfill.2} := \max(h_{wall.2}, h_{wall.2} + \min(B_{bot.2}, d_{slope.2}) \cdot \tan(\beta)) = 7.997\,ft$$

$$h_{backfill.3} := \max(h_{wall.3}, h_{wall.3} + \min(B_{bot.3}, d_{slope.3}) \cdot \tan(\beta)) = 0\,ft$$

The height of backfill is taken at the end of the reinforced soil mass.

External Stability Analysis at Anchor 1

Calculate Vertical Loads and Associated Lever Arms ***(All Lever Arms are from Point "O")***

$$DC_{wall.1} := t_{wall} \cdot h_{wall.1} \cdot \gamma_c = 1.364 \cdot \frac{kip}{ft}$$

$$x_{DC.wall.1} := \frac{1}{2} t_{wall} = 0.417\,ft$$

$$EV1a_1 := \frac{1}{2} \gamma_s \cdot \left(h_{backfill.1} - h_{wall.1}\right) \cdot \left(d_{slope.1}\right) = 0 \cdot \frac{kip}{ft}$$

$$x_{EV1a.1} := t_{wall} + \frac{2}{3} d_{slope.1} = 4.248\,ft$$

$$EV1b_1 := \gamma_s \cdot \left(h_{backfill.1} - h_{wall.1}\right) \cdot \left(B_{bot.1} - d_{slope.1}\right) = 0 \cdot \frac{kip}{ft}$$

$$x_{EV1b.1} := t_{wall} + d_{slope.1} + \frac{1}{2}\left(B_{bot.1} - d_{slope.1}\right) = 5.955\,ft$$

$$EV2_1 := \gamma_s \cdot \left(h_{wall.1} - 3.5ft\right) \cdot B_{bot.1} = 5.315 \cdot \frac{kip}{ft}$$

$$x_{EV2.1} := t_{wall} + \frac{1}{2} B_{bot.1} = 3.394\,ft$$

$$EV3_1 := \gamma_s \cdot (3.5ft) \cdot \left(B_{bot.lower.1} - \frac{7in}{\cos(30deg)}\right) = 1.143 \cdot \frac{kip}{ft}$$

$$x_{EV3.1} := t_{wall} + \frac{1}{2}\left(B_{bot.lower.1} - \frac{7in}{\cos(30deg)}\right) = 2\,ft$$

$$EV4_1 := \gamma_s \cdot \frac{1}{2} \cdot 3.5ft \cdot \left[\left(W_1 + 3ft + 5.375in\right) - \left(B_{bot.lower.1} - \frac{7in}{\cos(30deg)}\right)\right] = 0.518 \cdot \frac{kip}{ft}$$

$$x_{EV4.1} := t_{wall} + B_{bot.lower.1} + \frac{1}{3} \cdot \left[W_1 + 3ft + 5.375in - \left(B_{bot.lower.1} - \frac{7in}{\cos(30deg)}\right)\right] = 4.545\,ft$$

$$DC_{anchor.1} := \frac{1}{trib_1} \cdot \begin{cases} (1740lbf) & \text{if } AnchorType_1 = \text{"B"} \\ (2010lbf) & \text{if } AnchorType_1 = \text{"C"} \\ (2285lbf) & \text{if } AnchorType_1 = \text{"D"} \\ (2550lbf) & \text{if } AnchorType_1 = \text{"E"} \end{cases} = 0.365 \cdot \frac{kip}{ft}$$

(See Anchor Geometry Drawing)

$$x_{anchor.1} := t_{wall} + \begin{cases} (2ft + 2.25in) & \text{if } AnchorType_1 = \text{"B"} \\ (2ft + 8.8125in) & \text{if } AnchorType_1 = \text{"C"} \\ (3ft + 5.125in) & \text{if } AnchorType_1 = \text{"D"} \\ (4ft + 0.0625in) & \text{if } AnchorType_1 = \text{"E"} \end{cases} = 3.568 \cdot ft$$

$$LS_{vert.1} := \begin{cases} \left[q_{sur} \cdot \left[B_{bot.1} - \left(d_{traffic.1}\right)\right]\right] & \text{if } d_{traffic.1} < B_{bot.1} \\ 0 & \text{otherwise} \end{cases} = 0 \cdot \frac{kip}{ft}$$

Used in bearing calcs only

$$x_{LS.vert.1} := t_{wall} + d_{traffic.1} + \frac{1}{2}\left(B_{bot.1} - d_{traffic.1}\right) = 20.894\,ft$$

$$DC_{ftg.1} := \gamma_c \cdot t_{ftg} \cdot h_{ftg} = 0 \cdot \frac{kip}{ft}$$

$$x_{DC.ftg.1} := \frac{t_{ftg}}{2} = 0.417\,ft$$

Note: This moment arm is measured from the front toe of the ftg since it is only used in bearing calculations.

Calculate Lateral Loads and Associated Lever Arms

$$EH1_{1.vert} := \frac{1}{2} k_{a.wall} \cdot \gamma_s \cdot \left(h_{backfill.1} - 3.5ft\right)^2 \cdot \sin\left(\delta_{wall}\right) = 0.421 \cdot \frac{kip}{ft}$$

$$EH1_{1.hor} := \frac{1}{2} k_{a.wall} \cdot \gamma_s \cdot \left(h_{backfill.1} - 3.5ft\right)^2 \cdot \cos\left(\delta_{wall}\right) = 0.883 \cdot \frac{kip}{ft}$$

$$x_{EH1.1} := t_{wall} + B_{bot.1} = 5.955\,ft$$

$$y_{EH1.1} := 3.5ft + \frac{1}{3}\left(h_{backfill.1} - 3.5ft\right) = 5.971\,ft$$

$$EH2_{1.vert} := k_{a.anchor} \cdot \gamma_s \cdot \left(h_{backfill.1} - 3.5ft\right) \cdot (4ft) \cdot \sin\left(\delta_{anchor} - 30deg\right) = -0.083 \cdot \frac{kip}{ft}$$

$$EH2_{1.hor} := k_{a.anchor} \cdot \gamma_s \cdot \left(h_{backfill.1} - 3.5ft\right) \cdot (4ft) \cdot \cos\left(\delta_{anchor} - 30deg\right) = 0.361 \cdot \frac{kip}{ft}$$

$$x_{EH2.1} := t_{wall} + \frac{1}{2}\left(B_{bot.1} + B_{bot.lower.1}\right) = 4.898\,ft$$

$$y_{EH2.1} := 3.5ft - \frac{1}{2} \cdot 4ft = 1.5\,ft$$

$$EH3_{1.vert} := \frac{1}{2} k_{a.anchor} \cdot \gamma_s \cdot (4ft)^2 \cdot \sin\left(\delta_{anchor} - 30deg\right) = -0.022 \cdot \frac{kip}{ft}$$

$$EH3_{1.hor} := \frac{1}{2} k_{a.anchor} \cdot \gamma_s \cdot (4ft)^2 \cdot \cos\left(\delta_{anchor} - 30deg\right) = 0.097 \cdot \frac{kip}{ft}$$

$$x_{EH3.1} := t_{wall} + B_{bot.lower.1} + \left(3.5ft - \frac{2}{3}\cdot 4ft\right)\tan(30deg) = 4.321\,ft$$

$$y_{EH3.1} := 3.5ft - \frac{2}{3}\cdot 4ft = 10\cdot in$$

$$LS_{hor.1} := \begin{cases} \left(k_{a.wall}\cdot q_{sur}\cdot h_{backfill.1}\right) & \text{if } d_{traffic.1} < \frac{h_{wall.1}}{2} \\ 0 & \text{otherwise} \end{cases} = 0\cdot\frac{kip}{ft}$$

$$x_{LS.hor.1} := t_{wall} + \frac{1}{2}\left(B_{bot.lower.1} + B_{bot.1}\right) = 4.898\,ft$$ (Assumed for ease of calculation)

$$y_{LS.hor.1} := \frac{1}{2}h_{backfill.1} = 5.457\,ft$$

Check Sliding

Per AASHTO 11.11.4.2, Sliding shall be evaluated according to 10.6.3.4. Per 11.5.3, sliding shall be evaluated at the strength limit state. Use minimum load factors for vertical loads and maximum load factors for horizontal loads. Assume the failure plane is beneath the wall ftg, which will be grouted to the wall during construction. This is consistent with assumptions in the HITEC report (page D24).

Resisting Forces

$$\phi_{\tau} := 0.9$$ AASHTO Table 10.5.5.2.2-1, "Precast on Sand" or "Soil on Soil"

$$\Sigma V_1 := 0.9\left(DC_{wall.1} + DC_{anchor.1} + DC_{ftg.1}\right) + 1.0\cdot\left(EV1a_1 + EV1b_1 + EV2_1 + EV3_1 + EV4_1\right) \ldots + \eta_i\cdot 1.50\cdot\left(EH1_{1.vert} + EH2_{1.vert} + EH3_{1.vert}\right) = 9.007\cdot\frac{kip}{ft}$$

$$R_{\tau.1} := 0.8\cdot\tan\left(\phi_{ftg}\right)\cdot\Sigma V_1 = 5.235\cdot\frac{kip}{ft}$$ AASHTO 10.6.3.4

$$\boxed{R_{r.1} := \phi_{\tau}\cdot R_{\tau.1} = 4.711\cdot\frac{kip}{ft}}$$

Driving Forces

$$\Sigma H_{\tau.1} := \eta_i\cdot\left[1.50\cdot\left(EH1_{1.hor} + EH2_{1.hor} + EH3_{1.hor}\right) + 1.75LS_{hor.1}\right] = 2.011\cdot\frac{kip}{ft}$$

$$Check_{sliding.1} := \begin{cases} \text{"OK"} & \text{if } \frac{R_{r.1}}{\Sigma H_{\tau.1}} \geq 1 \\ \text{"NG"} & \text{otherwise} \end{cases} = \text{"OK"}$$

Check Overturning and Eccentricity

Per AASHTO 11.11.4.4, Overturning shall be evaluated according to 11.6.3.3. A maximum of 80% of the retained soil shall be used to resist overturning. Per 11.6.3.3, evaluate overturning and eccentricity at the strength limit state using maximum load factors for horizontal loads and minimum load factors for vertical loads. First, evaluate overturning about front base of wall. If the wall passes the overturning check, the wing will not experience uplift with respect to the footing. Therefore evaluate eccentricity at the bottom of the footing. The location of the resultant of the reaction forces shall be located within the middle half of the base width (footing width plus anchor projection). Eccentricity is measured from the center of the base width toward the stream side of the footing. Assume that a negative eccentricity (beyond the center of the base, toward the backfill) is acceptable since this condition will engage passive earth pressures.

Resisting Forces

$$\begin{aligned} Resisting_1 := {} & 0.9\left(DC_{wall.1}\cdot x_{DC.wall.1} + DC_{anchor.1}\cdot x_{anchor.1}\right) \ldots \\ & + 1.0\cdot 0.8\cdot\left(EV1a_1\cdot x_{EV1a.1} + EV1b_1\cdot x_{EV1b.1} + EV2_1\cdot x_{EV2.1} + EV3_1\cdot x_{EV3.1} + EV4_1\cdot x_{EV4.1}\right) \ldots \\ & + 1.50\left(EH1_{1.vert}\cdot x_{EH1.1} + EH2_{1.vert}\cdot x_{EH2.1} + EH3_{1.vert}\cdot x_{EH3.1}\right) \end{aligned} = 22.835\cdot\frac{kip\cdot ft}{ft}$$

Driving Forces

$$Driving_1 := 1.50\cdot\left(EH1_{1.hor}\cdot y_{EH1.1} + EH2_{1.hor}\cdot y_{EH2.1} + EH3_{1.hor}\cdot y_{EH3.1}\right) + 1.75LS_{hor.1}\cdot y_{LS.hor.1} = 8.84\cdot\frac{kip\cdot ft}{ft}$$

$$Check_{OT.1} := \begin{cases} \text{"OK"} & \text{if } \dfrac{Resisting_1}{Driving_1} \ge 1 \\ \text{"NG"} & \text{otherwise} \end{cases} = \text{"OK"}$$

Eccentricity of Resultant

$$\begin{aligned} \Sigma V_{e.1} := {} & 0.9\left(DC_{wall.1} + DC_{anchor.1}\right) + 1.0\cdot 0.8\cdot\left(EV1a_1 + EV1b_1 + EV2_1 + EV3_1 + EV4_1\right) \ldots \\ & + 1.50\left(EH1_{1.vert} + EH2_{1.vert} + EH3_{1.vert}\right) \end{aligned} = 7.611\cdot\frac{kip}{ft}$$

$$l_1 := \frac{\left[\Sigma V_{e.1}\cdot\left[\dfrac{\left(Resisting_1 - Driving_1\right)}{\Sigma V_{e.1}} + \dfrac{1}{2}\left(t_{ftg} - t_{wall}\right)\right] + 0.9DC_{ftg.1}\cdot x_{DC.ftg.1}\right]}{\Sigma V_{e.1} + 0.9DC_{ftg.1}} = 1.839\,ft$$

(Distance to resultant from face of ftg)

$$B_1 := B_{bot.lower.1} + t_{wall} + \frac{1}{2}\left(t_{ftg} - t_{wall}\right) = 3.84\,ft$$

$$e_1 := \max\left(\frac{B_1}{2} - l_1, 0ft\right) = 0.081\,ft$$

$$e_{allow.1} := \frac{B_1}{4} = 0.96\,ft$$

(Within Middle Half of ftg per AASHTO 11.6.3.3)

$$Check_{e.1} := \begin{cases} \text{"OK"} & \text{if } \frac{e_1}{e_{allow.1}} \le 1 \\ \text{"NG"} & \text{otherwise} \end{cases} = \text{"OK"}$$

Check Bearing Pressure

Per 11.11.4.3 Evaluate bearing pressure with respect to resistance calculated in 10.6.3. Per HITEC p. D24, use the horizontal portion of the anchor at its base plus the footing width. Evaluate at the strength limit state. Use 100% of the weight of the retained soil. When Live Load Surcharge is present, Strength I with maximum load factors for vertical loads and horizontal loads controls. Include the effects of live load surcharge. Since lever arms are calculated from the front face of the wall, must add to the eccentricity the distance between wall and toe of footing.

$$\begin{aligned} Resisting_{brg.1} := {} & 1.25\left(DC_{wall.1}\cdot x_{DC.wall.1} + DC_{anchor.1}\cdot x_{anchor.1}\right) \ldots \\ & + 1.35\cdot\left(EV1a_1\cdot x_{EV1a.1} + EV1b_1\cdot x_{EV1b.1} + EV2_1\cdot x_{EV2.1} + EV3_1\cdot x_{EV3.1} + EV4_1\cdot x_{EV4.1}\right) \ldots \\ & + 1.35\left(EH1_{1.vert}\cdot x_{EH1.1} + EH2_{1.vert}\cdot x_{EH2.1} + EH3_{1.vert}\cdot x_{EH3.1}\right) \ldots \\ & + 1.75\cdot\left(LS_{vert.1}\cdot x_{LS.vert.1}\right) \end{aligned} = 35.665\cdot\frac{kip\cdot ft}{ft}$$

$$Driving_{brg.1} := 1.35\left(EH1_{1.hor}\cdot y_{EH1.1} + EH2_{1.hor}\cdot y_{EH2.1} + EH3_{1.hor}\cdot y_{EH3.1}\right) + 1.75LS_{hor.1}\cdot y_{LS.hor.1} = 7.956\cdot\frac{kip\cdot ft}{ft}$$

$$\begin{aligned} \Sigma V_{brg.1} := {} & 1.25\cdot\left(DC_{wall.1} + DC_{anchor.1}\right) + 1.35\cdot\left(EV1a_1 + EV1b_1 + EV2_1 + EV3_1 + EV4_1\right) \ldots \\ & + 1.35\cdot\left(EH1_{1.vert} + EH2_{1.vert} + EH3_{1.vert}\right) + 1.75\cdot\left(LS_{vert.1}\right) \end{aligned} = 12.007\cdot\frac{kip}{ft}$$

$$l_{brg.1} := \frac{\left[\Sigma V_{brg.1}\cdot\left[\frac{\left(Resisting_{brg.1} - Driving_{brg.1}\right)}{\Sigma V_{brg.1}} + \frac{1}{2}\left(t_{ftg} - t_{wall}\right)\right] + 1.25DC_{ftg.1}\cdot x_{DC.ftg.1}\right]}{\Sigma V_{brg.1} + 1.25DC_{ftg.1}} = 2.308\,ft$$

(Distance to resultant from face of ftg)

$$e_{brg.1} := \max\left(\frac{B_1}{2} - l_{brg.1}, 0ft\right) = 0\,ft$$

$$\sigma_{foot.1} := \frac{\Sigma V_{brg.1}}{B_1 - 2\cdot e_{brg.1}} = 3.126\cdot ksf$$

Eq. 11.6.3.2-1, Rectangular Distibution for Foundations on soil

$$q_R = 10\cdot ksf$$

$$CheckBearing_1 := \begin{cases} \text{"OK"} & \text{if } \frac{q_R}{\sigma_{foot.1}} \ge 1 \\ \text{"NG"} & \text{otherwise} \end{cases} = \text{"OK"}$$

External Stability Analysis at Anchor 2

Calculate Vertical Loads and Associated Lever Arms ***(All Lever Arms are from Point "O")***

$$DC_{wall.2} := t_{wall} \cdot h_{wall.2} \cdot \gamma_c = 1 \cdot \frac{kip}{ft}$$

$$x_{DC.wall.2} := \frac{1}{2} t_{wall} = 0.417\,ft$$

$$EV1a_2 := \frac{1}{2} \gamma_s \cdot \left(h_{backfill.2} - h_{wall.2}\right) \cdot \left(d_{slope.2}\right) = 0 \cdot \frac{kip}{ft}$$

$$x_{EV1a.2} := t_{wall} + \frac{2}{3} d_{slope.2} = 4.248\,ft$$

$$EV1b_2 := \gamma_s \cdot \left(h_{backfill.2} - h_{wall.2}\right) \cdot \left(B_{bot.2} - d_{slope.2}\right) = 0 \cdot \frac{kip}{ft}$$

$$x_{EV1b.2} := t_{wall} + d_{slope.2} + \frac{1}{2}\left(B_{bot.2} - d_{slope.2}\right) = 5.955\,ft$$

$$EV2_2 := \gamma_s \cdot \left(h_{wall.2} - 3.5ft\right) \cdot B_{bot.2} = 3.224 \cdot \frac{kip}{ft}$$

$$x_{EV2.2} := t_{wall} + \frac{1}{2} B_{bot.2} = 3.394\,ft$$

$$EV3_2 := \gamma_s \cdot (3.5ft) \cdot \left(B_{bot.lower.2} - \frac{7in}{\cos(30deg)}\right) = 1.143 \cdot \frac{kip}{ft}$$

$$x_{EV3.2} := t_{wall} + \frac{1}{2}\left(B_{bot.lower.2} - \frac{7in}{\cos(30deg)}\right) = 2\,ft$$

$$EV4_2 := \gamma_s \cdot \frac{1}{2} \cdot 3.5ft \cdot \left[\left(W_2 + 3ft + 5.375in\right) - \left(B_{bot.lower.2} - \frac{7in}{\cos(30deg)}\right)\right] = 0.518 \cdot \frac{kip}{ft}$$

$$x_{EV4.2} := t_{wall} + B_{bot.lower.2} + \frac{1}{3} \cdot \left[W_2 + 3ft + 5.375in - \left(B_{bot.lower.2} - \frac{7in}{\cos(30deg)}\right)\right] = 4.545\,ft$$

$$DC_{anchor.2} := \frac{1}{trib_2} \cdot \begin{cases} (1740lbf) & \text{if } AnchorType_2 = \text{"B"} \\ (2010lbf) & \text{if } AnchorType_2 = \text{"C"} \\ (2285lbf) & \text{if } AnchorType_2 = \text{"D"} \\ (2550lbf) & \text{if } AnchorType_2 = \text{"E"} \end{cases} = 0.365 \cdot \frac{kip}{ft}$$

(See Anchor Geometry Drawing)

$$x_{anchor.2} := t_{wall} + \begin{cases} (2ft + 2.25in) & \text{if } AnchorType_2 = \text{"B"} \\ (2ft + 8.8125in) & \text{if } AnchorType_2 = \text{"C"} \\ (3ft + 5.125in) & \text{if } AnchorType_2 = \text{"D"} \\ (4ft + 0.0625in) & \text{if } AnchorType_2 = \text{"E"} \end{cases} = 3.568 \cdot ft$$

$$LS_{vert.2} := \begin{cases} \left[q_{sur} \cdot \left[B_{bot.2} - \left(d_{traffic.2}\right)\right]\right] & \text{if } d_{traffic.2} < B_{bot.2} \\ 0 & \text{otherwise} \end{cases} = 0 \cdot \frac{kip}{ft}$$

Used in bearing calcs only

$$x_{LS.vert.2} := t_{wall} + d_{traffic.2} + \frac{1}{2}\left(B_{bot.2} - d_{traffic.2}\right) = 20.894\,ft$$

$$DC_{ftg.2} := \gamma_c \cdot t_{ftg} \cdot h_{ftg} = 0 \cdot \frac{kip}{ft}$$

$$x_{DC.ftg.2} := \frac{t_{ftg}}{2} = 0.417\,ft$$

Note: This moment arm is measured from the front toe of the ftg since it is only used in bearing calculations.

Calculate Lateral Loads and Associated Lever Arms

$$EH1_{2.vert} := \frac{1}{2} k_{a.wall} \cdot \gamma_s \cdot \left(h_{backfill.2} - 3.5ft\right)^2 \cdot \sin\left(\delta_{wall}\right) = 0.155 \cdot \frac{kip}{ft}$$

$$EH1_{2.hor} := \frac{1}{2} k_{a.wall} \cdot \gamma_s \cdot \left(h_{backfill.2} - 3.5ft\right)^2 \cdot \cos\left(\delta_{wall}\right) = 0.325 \cdot \frac{kip}{ft}$$

$$x_{EH1.2} := t_{wall} + B_{bot.2} = 5.955\,ft$$

$$y_{EH1.2} := 3.5ft + \frac{1}{3}\left(h_{backfill.2} - 3.5ft\right) = 4.999\,ft$$

$$EH2_{2.vert} := k_{a.anchor} \cdot \gamma_s \cdot \left(h_{backfill.2} - 3.5ft\right) \cdot (4ft) \cdot \sin\left(\delta_{anchor} - 30deg\right) = -0.05 \cdot \frac{kip}{ft}$$

$$EH2_{2.hor} := k_{a.anchor} \cdot \gamma_s \cdot \left(h_{backfill.2} - 3.5ft\right) \cdot (4ft) \cdot \cos\left(\delta_{anchor} - 30deg\right) = 0.219 \cdot \frac{kip}{ft}$$

$$x_{EH2.2} := t_{wall} + \frac{1}{2}\left(B_{bot.2} + B_{bot.lower.2}\right) = 4.898\,ft$$

$$y_{EH2.2} := 3.5ft - \frac{1}{2} \cdot 4ft = 1.5\,ft$$

$$EH3_{2.vert} := \frac{1}{2} k_{a.anchor} \cdot \gamma_s \cdot (4ft)^2 \cdot \sin\left(\delta_{anchor} - 30deg\right) = -0.022 \cdot \frac{kip}{ft}$$

$$EH3_{2.hor} := \frac{1}{2} k_{a.anchor} \cdot \gamma_s \cdot (4ft)^2 \cdot \cos\left(\delta_{anchor} - 30deg\right) = 0.097 \cdot \frac{kip}{ft}$$

$$x_{EH3.2} := t_{wall} + B_{bot.lower.2} + \left(3.5ft - \frac{2}{3}\cdot 4ft\right)\tan(30deg) = 4.321\,ft$$

$$y_{EH3.2} := 3.5ft - \frac{2}{3}\cdot 4ft = 10\cdot in$$

$$LS_{hor.2} := \begin{cases} \left(k_{a.wall}\cdot q_{sur}\cdot h_{backfill.2}\right) & \text{if } d_{traffic.2} < \frac{h_{wall.2}}{2} \\ 0 & \text{otherwise} \end{cases} = 0\cdot\frac{kip}{ft}$$

$$x_{LS.hor.2} := t_{wall} + \frac{1}{2}\left(B_{bot.lower.2} + B_{bot.2}\right) = 4.898\,ft$$ (Assumed for ease of calculation)

$$y_{LS.hor.2} := \frac{1}{2}h_{backfill.2} = 3.998\,ft$$

Check Sliding

Per AASHTO 11.11.4.2, Sliding shall be evaluated according to 10.6.3.4. Per 11.5.3, sliding shall be evaluated at the strength limit state. Use minimum load factors for vertical loads and maximum load factors for horizontal loads. Assume the failure plane is beneath the wall ftg, which will be grouted to the wall during construction. This is consistent with assumptions in the HITEC report (page D24).

Resisting Forces

$$\phi_\tau := 0.9$$ AASHTO Table 10.5.5.2.2-1, "Precast on Sand" or "Soil on Soil"

$$\Sigma V_2 := 0.9\left(DC_{wall.2} + DC_{anchor.2} + DC_{ftg.2}\right) + 1.0\cdot\left(EV1a_2 + EV1b_2 + EV2_2 + EV3_2 + EV4_2\right) \ldots = 6.237\cdot\frac{kip}{ft}$$
$$+\eta_i\cdot 1.50\cdot\left(EH1_{2.vert} + EH2_{2.vert} + EH3_{2.vert}\right)$$

$$R_{\tau.2} := 0.8\cdot\tan\left(\phi_{ftg}\right)\cdot\Sigma V_2 = 3.625\cdot\frac{kip}{ft}$$ AASHTO 10.6.3.4

$$\boxed{R_{r.2} := \phi_\tau\cdot R_{\tau.2} = 3.263\cdot\frac{kip}{ft}}$$

Driving Forces

$$\Sigma H_{\tau.2} := \eta_i\cdot\left[1.50\cdot\left(EH1_{2.hor} + EH2_{2.hor} + EH3_{2.hor}\right) + 1.75LS_{hor.2}\right] = 0.961\cdot\frac{kip}{ft}$$

$$Check_{sliding.2} := \begin{cases} \text{"OK"} & \text{if } \frac{R_{r.2}}{\Sigma H_{\tau.2}} \ge 1 \\ \text{"NG"} & \text{otherwise} \end{cases} = \text{"OK"}$$

Check Overturning and Eccentricity

Per AASHTO 11.11.4.4, Overturning shall be evaluated according to 11.6.3.3. A maximum of 80% of the retained soil shall be used to resist overturning. Per 11.6.3.3, evaluate overturning and eccentricity at the strength limit state using maximum load factors for horizontal loads and minimum load factors for vertical loads. First, evaluate overturning about front base of wall. If the wall passes the overturning check, the wing will not experience uplift with respect to the footing. Therefore evaluate eccentricity at the bottom of the footing. The location of the resultant of the reaction forces shall be located within the middle half of the base width (footing width plus anchor projection). Eccentricity is measured from the center of the base width toward the stream side of the footing. Assume that a negative eccentricity (beyond the center of the base, toward the backfill) is acceptable since this condition will engage passive earth pressures.

Resisting Forces

$$\begin{aligned} Resisting_2 := {} & 0.9\left(DC_{wall.2}\cdot x_{DC.wall.2} + DC_{anchor.2}\cdot x_{anchor.2}\right) \cdots \\ & + 1.0\cdot 0.8\cdot\left(EV1a_2\cdot x_{EV1a.2} + EV1b_2\cdot x_{EV1b.2} + EV2_2\cdot x_{EV2.2} + EV3_2\cdot x_{EV3.2} + EV4_2\cdot x_{EV4.2}\right) \cdots \\ & + 1.50\left(EH1_{2.vert}\cdot x_{EH1.2} + EH2_{2.vert}\cdot x_{EH2.2} + EH3_{2.vert}\cdot x_{EH3.2}\right) \end{aligned} = 14.883\cdot\frac{kip\cdot ft}{ft}$$

Driving Forces

$$Driving_2 := 1.50\cdot\left(EH1_{2.hor}\cdot y_{EH1.2} + EH2_{2.hor}\cdot y_{EH2.2} + EH3_{2.hor}\cdot y_{EH3.2}\right) + 1.75LS_{hor.2}\cdot y_{LS.hor.2} = 3.049\cdot\frac{kip\cdot ft}{ft}$$

$$Check_{OT.2} := \begin{cases} \text{"OK"} & \text{if } \dfrac{Resisting_2}{Driving_2} \geq 1 \\ \text{"NG"} & \text{otherwise} \end{cases} = \text{"OK"}$$

Eccentricity of Resultant

$$\begin{aligned} \Sigma V_{e.2} := {} & 0.9\left(DC_{wall.2} + DC_{anchor.2}\right) + 1.0\cdot 0.8\cdot\left(EV1a_2 + EV1b_2 + EV2_2 + EV3_2 + EV4_2\right) \cdots \\ & + 1.50\left(EH1_{2.vert} + EH2_{2.vert} + EH3_{2.vert}\right) \end{aligned} = 5.26\cdot\frac{kip}{ft}$$

$$l_2 := \frac{\left[\Sigma V_{e.2}\cdot\left[\dfrac{\left(Resisting_2 - Driving_2\right)}{\Sigma V_{e.2}} + \dfrac{1}{2}\left(t_{ftg} - t_{wall}\right)\right] + 0.9DC_{ftg.2}\cdot x_{DC.ftg.2}\right]}{\Sigma V_{e.2} + 0.9DC_{ftg.2}} = 2.25\,ft$$

(Distance to resultant from face of ftg)

$$B_2 := B_{bot.lower.2} + t_{wall} + \frac{1}{2}\left(t_{ftg} - t_{wall}\right) = 3.84\,ft$$

$$e_2 := \max\left(\frac{B_2}{2} - l_2, 0ft\right) = 0\,ft$$

$$e_{allow.2} := \frac{B_2}{4} = 0.96\,ft$$

(Within Middle Half of ftg per AASHTO 11.6.3.3)

$$Check_{e.2} := \begin{cases} \text{"OK"} & \text{if } \dfrac{e_2}{e_{allow.2}} \le 1 \\ \text{"NG"} & \text{otherwise} \end{cases} = \text{"OK"}$$

Check Bearing Pressure

Per 11.11.4.3 Evaluate bearing pressure with respect to resistance calculated in 10.6.3. Per HITEC p. D24, use the horizontal portion of the anchor at its base plus the footing width. Evaluate at the strength limit state. Use 100% of the weight of the retained soil. When Live Load Surcharge is present, Strength I with maximum load factors for vertical loads and horizontal loads controls. Include the effects of live load surcharge. Since lever arms are calculated from the front face of the wall, must add to the eccentricity the distance between wall and toe of footing.

$$\begin{aligned} Resisting_{brg.2} := {} & 1.25\left(DC_{wall.2}\cdot x_{DC.wall.2} + DC_{anchor.2}\cdot x_{anchor.2}\right) \ldots \\ & + 1.35\cdot\left(EV1a_2\cdot x_{EV1a.2} + EV1b_2\cdot x_{EV1b.2} + EV2_2\cdot x_{EV2.2} + EV3_2\cdot x_{EV3.2} + EV4_2\cdot x_{EV4.2}\right) \ldots \\ & + 1.35\left(EH1_{2.vert}\cdot x_{EH1.2} + EH2_{2.vert}\cdot x_{EH2.2} + EH3_{2.vert}\cdot x_{EH3.2}\right) \ldots \\ & + 1.75\cdot\left(LS_{vert.2}\cdot x_{LS.vert.2}\right) \end{aligned} = 23.97\cdot\frac{kip\cdot ft}{ft}$$

$$Driving_{brg.2} := 1.35\left(EH1_{2.hor}\cdot y_{EH1.2} + EH2_{2.hor}\cdot y_{EH2.2} + EH3_{2.hor}\cdot y_{EH3.2}\right) + 1.75LS_{hor.2}\cdot y_{LS.hor.2} = 2.744\cdot\frac{kip\cdot ft}{ft}$$

$$\begin{aligned} \Sigma V_{brg.2} := {} & 1.25\cdot\left(DC_{wall.2} + DC_{anchor.2}\right) + 1.35\cdot\left(EV1a_2 + EV1b_2 + EV2_2 + EV3_2 + EV4_2\right) \ldots \\ & + 1.35\cdot\left(EH1_{2.vert} + EH2_{2.vert} + EH3_{2.vert}\right) + 1.75\cdot\left(LS_{vert.2}\right) \end{aligned} = 8.412\cdot\frac{kip}{ft}$$

$$l_{brg.2} := \frac{\left[\Sigma V_{brg.2}\cdot\left[\dfrac{\left(Resisting_{brg.2} - Driving_{brg.2}\right)}{\Sigma V_{brg.2}} + \dfrac{1}{2}\left(t_{ftg} - t_{wall}\right)\right] + 1.25DC_{ftg.2}\cdot x_{DC.ftg.2}\right]}{\Sigma V_{brg.2} + 1.25DC_{ftg.2}} = 2.523\,ft$$

(Distance to resultant from face of ftg)

$$e_{brg.2} := \max\left(\frac{B_2}{2} - l_{brg.2}, 0ft\right) = 0\,ft$$

$$\sigma_{foot.2} := \frac{\Sigma V_{brg.2}}{B_2 - 2\cdot e_{brg.2}} = 2.191\cdot ksf$$

Eq. 11.6.3.2-1, Rectangular Distibution for Foundations on soil

$$q_R = 10\cdot ksf$$

$$CheckBearing_2 := \begin{cases} \text{"OK"} & \text{if } \dfrac{q_R}{\sigma_{foot.2}} \ge 1 \\ \text{"NG"} & \text{otherwise} \end{cases} = \text{"OK"}$$

Check Wall Reinforcement

Assume the wall stem is cantilevered above the anchor. Use tallest wall section above anchor. Use maximum horizontal load factors to calculate moments and shears. Use minimum load factor for axial compression.

Calculate Horizontal Loads and resp. Lever Arms at top of Anchor

$h_{wall.internal} := h_{backfill.1} - 3.5ft = 7.413\,ft$

$EH_{wall} := \frac{1}{2} k_{a.wall} \cdot \gamma_s \cdot h_{wall.internal}^2 = 0.978 \cdot \frac{kip}{ft}$ $\qquad y_{EH.wall} := \frac{1}{3} h_{wall.1} = 3.638\,ft$

$LS_{wall} := \begin{cases} 0 & \text{if } d_{traffic.1} \geq \frac{1}{2} \cdot h_{wall.1} \\ \left(k_{a.wall} \cdot q_{sur} \cdot h_{wall.internal}\right) & \text{otherwise} \end{cases} = 0 \cdot \frac{kip}{ft}$ $\qquad y_{LS.wall} := \frac{1}{2} h_{wall.1} = 5.457\,ft$

$Mu_{wall} := \eta_i \cdot \left(1.5 \cdot EH_{wall} \cdot y_{EH.wall} + 1.75 LS_{wall} \cdot y_{LS.wall}\right) = 5.337 \cdot \frac{kip \cdot ft}{ft}$

$Vu_{wall} := \eta_i \cdot \left(1.5 EH_{wall} + 1.75 LS_{wall}\right) = 1.467 \cdot \frac{kip}{ft}$

$Nu_{wall} := -\eta_i \cdot \left(0.9 \cdot \gamma_c \cdot t_{wall} \cdot h_{wall.internal}\right) = -0.834 \cdot \frac{kip}{ft}$

Check Moment Capacity

$bar_{wall} := 5$ $\qquad s_{wall} := 12in$ $\qquad cover_{wall} := 1.5in$

$b_w := 1ft$

$diam_{wall} := \frac{bar_{wall}}{8} in = 0.625 \cdot in$

$As_{wall} := \frac{\pi \cdot diam_{wall}^2}{4} \cdot 12 \frac{in}{s_{wall}} = 0.307 \cdot in^2$

$d_{wall} := t_{wall} - cover_{wall} - \frac{diam_{wall}}{2} = 8.188 \cdot in$

$\phi_{moment} := 0.90$ $\qquad$ Per AASHTO 5.5.4.2.1

$\phi_{shear} := 0.90$ $\qquad$ Per AASHTO 5.5.4.2.1

Verify that f_y can be substituted for f_s in the equations of 5.7.3.2. This is allowed when $\frac{c}{d_s} \le 0.60$.

$c_{wall} := \frac{As_{wall} \cdot f_y}{0.85 \cdot f_c \cdot \beta_1 \cdot b_w} = 0.451 \cdot in$ Simplified equation 5.7.3.1.2-4

$\frac{c_{wall}}{d_{wall}} = 0.055$ **This is less than 0.60 therefore f_y can be substituted for f_s**

$a_{wall} := \beta_1 \cdot c_{wall} = 0.361 \cdot in$

$Mn_{wall} := As_{wall} \cdot f_y \cdot \left(d_{wall} - \frac{a_{wall}}{2} \right)$

$Mr_{wall} := \phi_{moment} \cdot Mn_{wall} = 11.054 \cdot kip \cdot ft$

$Mu_{wall} \cdot b_w = 5.337 \cdot kip \cdot ft$

$$Check_{WallFlexure} := \begin{cases} \text{"OK"} & \text{if } \frac{Mr_{wall}}{Mu_{wall} \cdot b_w} \ge 1 \\ \text{"NG"} & \text{otherwise} \end{cases} = \text{"OK"}$$

Check Minimum Flexural Reinforcement (5.7.3.3.2)

$f_r := 0.24 \cdot \sqrt{f_c \cdot ksi} = 0.537 \cdot ksi$ AASHTO 5.4.2.6

$I_{g.wall} := \frac{1}{12} \cdot b_w \cdot t_{wall}^3 = 1 \times 10^3 \cdot in^4$

$y_{t.wall} := \frac{t_{wall}}{2} = 5 \cdot in$ Distance from centroid to extreme tension fibers. Conservatively ignore reinforcement.

$S_{c.wall} := \frac{I_{g.wall}}{y_{t.wall}} = 200 \cdot in^3$

$\gamma_3 := 0.67$ 0.67 = Factor for Grade 60 ASTM A615 rebar

$\gamma_1 := 1.2$ 1.2 = Factor for precast segmental structures

$M_{cr.wall} := \gamma_3 \cdot \gamma_1 \cdot S_{c.wall} \cdot f_r = 7.191 \cdot kip \cdot ft$ Simplified AASHTO Eq 5.7.3.3.2-1

$1.33 Mu_{wall} \cdot b_w = 7.098 \cdot kip \cdot ft$

$$Check_{MinSteelWall} := \begin{cases} \text{"OK"} & \text{if } Mr_{wall} \ge \min\left(1.33 Mu_{wall} \cdot b_w, M_{cr.wall}\right) \\ \text{"NG"} & \text{otherwise} \end{cases} = \text{"OK"}$$

Shear Resistance at Bottom of Wall (Section 5.8.3.4.2)

The section contains less than the minimum transverse reinforcement specified in 5.8.2.5, therefore use equation 5.8.3.4.2-2 to determine the longitudinal strain effect factor (β) at the location of maximum shear.

$Mu := \max(Mu_{wall}, Vu_{wall} \cdot d_{wall})$ In the eqtn below Mu shall not be less than $Vu \cdot d_v$

$$\xi_{s_wall} := \frac{\frac{|Mu|}{d_{wall}} + 0.5Nu_{wall} + |Vu_{wall}|}{E_s \cdot As_{wall}} \cdot b_w \qquad 1000 \cdot \xi_{s_wall} = 1 \qquad (5.8.3.4.2\text{-}4)$$

$s_{x_wall} := d_{wall}$

$$s_{xe_wall} := s_{x_wall} \cdot \frac{1.38in}{Aggregate_{diam} + 0.63in} = 8.187 \cdot in \qquad (5.8.3.4.2\text{-}5)$$

$$\beta_{wall} := \left(\frac{4.8}{1 + 750 \cdot \xi_{s_wall}}\right) \cdot \left(\frac{51}{39 + \frac{s_{xe_wall}}{1in}}\right) = 2.968 \qquad (5.8.3.4.2\text{-}2)$$

$$\Theta_{wall} := 29deg + 3500deg \cdot \xi_{s_wall} = 32.49 \cdot deg \qquad (5.8.3.4.2\text{-}3)$$

$$Vn_{wall} := \min\left(0.25 \cdot f_c \cdot b_w \cdot d_{wall}, 0.0316 \cdot \beta_{wall} \cdot \sqrt{f_c \cdot ksi} \cdot b_w \cdot d_{wall}\right) = 20.605 \cdot kip \qquad (5.8.3.3)$$

$Vr_{wall} := \phi_{shear} \cdot Vn_{wall} = 18.544 \cdot kip$

$Vu_{wall} \cdot b_w = 1.467 \cdot kip$

$$Check_{WallShear} := \begin{cases} \text{"OK"} & \text{if } \frac{Vr_{wall}}{Vu_{wall} \cdot b_w} \geq 1 \\ \text{"NG"} & \text{otherwise} \end{cases} = \text{"OK"}$$

Check Crack Control in Section 5.7.3.4

Stress in reinforcement calculated per MacGregor "Reinforced Concrete Mechanics and Design" 4th Ed

$$Ms_{wall} := \eta_i \cdot \left(1.0 \cdot EH_{wall} \cdot y_{EH.wall} + 1.0LS_{wall} \cdot y_{LS.wall}\right) = 3.558 \cdot \frac{kip \cdot ft}{ft}$$

$$Ns_{wall} := -\eta_i \cdot \left(1.0 \cdot \gamma_c \cdot t_{wall} \cdot h_{wall.internal}\right) = -0.927 \cdot \frac{kip}{ft}$$

$$\eta := \frac{E_s}{E_c} = 7.118$$

$$\rho_{wall} := \frac{As_{wall}}{b_w \cdot d_{wall}} = 0.003$$

$$k := \sqrt{2\rho_{wall} + \left(\rho_{wall} \cdot \eta\right)^2} - \rho_{wall} \cdot \eta$$

$$j_{wall} := 1 - \frac{k}{3} = 0.98$$

$$fss_{wall} := \frac{Ms_{wall} + Ns_{wall} \cdot \left(d_{wall} - \frac{t_{wall}}{2}\right)}{As_{wall} \cdot j_{wall} \cdot d_{wall}} = 16.144 \cdot \frac{ksi}{ft}$$

Stress in Reinforcement at Service Limit State

$$d_{c_wall} := t_{wall} - d_{wall} = 1.813 \cdot in$$

$$\beta_s := 1 + \frac{d_{c_wall}}{0.7 \cdot \left(t_{wall} - d_{c_wall}\right)} = 1.316$$

$$\gamma_e := 1.00$$

exposure factor

$$s_{max} := \frac{700 \frac{kip}{in} \cdot \gamma_e}{\beta_s \cdot fss_{wall} \cdot b_w} - 2 \cdot d_{c_wall} = 29.317 \cdot in$$

$$Check_{MaxSpacing} := \begin{cases} \text{"OK"} & \text{if } s_{wall} \le s_{max} \\ \text{"NG"} & \text{otherwise} \end{cases} = \text{"OK"}$$

Check Minimum Bar Spacing in Section 5.10.3.1.2:

$$s_{min} := \max\left(diam_{wall}, 1.33 Aggregate_{diam}, 1in\right) = 1 \cdot in$$

$$Check_{MinSpacing} := \begin{cases} \text{"OK"} & \text{if } s_{wall} \ge s_{min} \\ \text{"NG"} & \text{otherwise} \end{cases} = \text{"OK"}$$

Check Maximum Bar Spacing in Section 5.10.3.2:

$$s_{max} := \min\left(1.5 \cdot t_{wall}, 18in\right) = 15 \cdot in$$

$$Check_{MaxSpacing} := \begin{cases} \text{"OK"} & \text{if } s_{wall} \le s_{max} \\ \text{"NG"} & \text{otherwise} \end{cases} = \text{"OK"}$$

Check Anchor Attachment to Wall

Check Moment Capacity of Connection Bars

Conservatively assume the entire wall is cantilevered about the footing, therefore consider only driving moments. Use total loads instead of loads per foot. Use 100% of soil weight. Must determine controlling anchor, since tributary width is variable, not necessarily the anchor at the tallest wall. Assume only top four connection bars resist tension. This assumption is consistent with HITEC p.D28.

$Mu_{anchor} := \max(Driving_{brg.1} \cdot trib_1, Driving_{brg.2} \cdot trib_2) = 43.757 \cdot kip \cdot ft$

$bar_{anchor} := 5$ size of bar

$diam_{anchor} := \frac{bar_{anchor}}{8} in = 0.625 \cdot in$

$As_{anchor} := \frac{\pi}{4} \cdot diam_{anchor}^2 = 0.307 \cdot in^2$

$n := 6$ Number of bars in tension

$b_{anchor} := t_{stem} = 6 \cdot in$ thickness of anchor stem

$h_{stem} := 3ft + 6in$ height of anchor stem

$d_{anchor} := 30.5in$ distance from centroid of tension reinforcement extreme compression fiber.

Verify that f_y can be substituted for f_s in the equations of 5.7.3.2. This is allowed when $\frac{c}{d_s} \le 0.60$.

$c_{anchor} := \frac{n \cdot As_{anchor} \cdot f_y}{0.85 \cdot f_c \cdot \beta_1 \cdot b_{anchor}} = 5.414 \cdot in$ Simplified equation 5.7.3.1.2-4

$\frac{c_{anchor}}{d_{anchor}} = 0.178$ **This is less than 0.60 therefore f_y can be substituted for f_s**

$a_{anchor} := \beta_1 \cdot c_{anchor} = 4.331 \cdot in$

$Mn_{anchor} := n \cdot As_{anchor} \cdot f_y \cdot \left(d_{anchor} - \frac{a_{anchor}}{2}\right)$

$Mr_{anchor} := \phi_{moment} \cdot Mn_{anchor} = 234.708 \cdot kip \cdot ft$

$Mu_{anchor} = 43.757 \cdot kip \cdot ft$

$$Check_{AnchorFlexure} := \begin{cases} \text{"OK"} & \text{if } \frac{Mr_{anchor}}{Mu_{anchor}} \ge 1 \\ \text{"NG"} & \text{otherwise} \end{cases} = \text{"OK"}$$

Check Minimum Flexural Reinforcement (5.7.3.3.2)

$f_r = 0.537 \cdot ksi$ AASHTO 5.4.2.6

$I_{g.anchor} := \frac{1}{12} \cdot t_{stem} \cdot h_{stem}^3 = 3.704 \times 10^4 \cdot in^4$

$y_{t.anchor} := \frac{h_{stem}}{2} = 1.75\,ft$ Distance from centroid to extreme tension fibers. Conservatively ignore reinforcement.

$S_{c.anchor} := \frac{I_{g.anchor}}{y_{t.anchor}} = 1.764 \times 10^3 \cdot in^3$

$\gamma_3 := 0.67$ 0.67 = Factor for Grade 60 ASTM A615 rebar

$\gamma_1 := 1.2$ 1.2 = Factor for precast segmental structures

$M_{cr.anchor} := \gamma_3 \cdot \gamma_1 \cdot S_{c.anchor} \cdot f_r = 63.426 \cdot kip \cdot ft$ Simplified AASHTO Eq 5.7.3.3.2-1

$1.33Mu_{anchor} \cdot b_w = 58.197\,ft \cdot kip \cdot ft$

$$Check_{MinSteelAnchor} := \begin{cases} \text{"OK"} & \text{if } Mr_{anchor} \geq \min(1.33Mu_{anchor}, M_{cr.anchor}) \\ \text{"NG"} & \text{otherwise} \end{cases} = \text{"OK"}$$

Check Minimum Steel for Temperature and Shrinkage (11.6.1.5.1 & 5.10.8)

$$As_{min.anchor} := \max\left[0.11\frac{in^2}{ft}, \min\left[0.60\frac{in^2}{ft}, \frac{1.30 \cdot b_{anchor} \cdot h_{stem}}{2 \cdot (b_{anchor} + h_{stem}) \cdot \frac{f_y}{ksi}}\right]\right] = 0.6 \cdot \frac{in^2}{ft}$$

$As_{min.anchor} \cdot h_{stem} = 2.1 \cdot in^2$

$As_{anchor} \cdot (n + 2) = 2.454 \cdot in^2$ Account for extra two bars in compression face

Check Hook Development of Connection Steel in Wall

Per 5.10.2, A standard hook with a 180 degree bend shall have a 4*db extension, but not less than 2.5 inches. Per 5.12.3, Cover beyond free end of bar shall be 2 inches.

$$l_{hb} := \frac{38.0 diam_{anchor}}{\sqrt{\left(\frac{f_c}{ksi}\right)}} = 10.621 \cdot in$$

Basic development length for a Grade 60 bar with a standard hook (AASHTO 5.11.2.4.1)

Modification Factors to be applied to the Basic Development Length (AASHTO 5.11.2.4.2)

$M_{strength} := 1$ — Increase by fy/60 for yield strength greater than 60ksi

$M_{cover} := 0.7$ — 0.7 if side cover normal to plane of hook is at least 2.5 inches AND Cover beyond hook is at least 2.0in

$M_{stirrups} := 1.0$ — 0.8 if hook is enclose in with ties or stirrups as specified in 5.11.2.4.2

$M_{As} := 1.0$ — Conservatively assume entire area of steel provided is required.

$M_{lightweight} := 1.0$ — 1.3 if lightweight concrete is used.

$M_{epoxy} := 1.0$ — 1.2 if epoxy rebar is used.

$$M := M_{strength} \cdot M_{cover} \cdot M_{stirrups} \cdot M_{As} \cdot M_{lightweight} \cdot M_{epoxy} = 0.7$$

$$l_{dh} := \max(6in, 8 \cdot diam_{anchor}, M \cdot l_{hb}) = 7.435 \cdot in$$

$$t_{wall.min} := cover_{wall} + l_{dh} = 8.935 \cdot in$$

$$Check_{Wall.Thickness} := \begin{cases} \text{"OK"} & \text{if } t_{wall} \geq t_{wall.min} \\ \text{"NG"} & \text{otherwise} \end{cases} = \text{"OK"}$$

Design/Analysis References:

1. AASHTO LRFD Bridge Design Specifications, 6th Edition.
2.
3. Das, Principles of Foundation Engineering, 5th Edition.
4. Holtz & Kovacs, Introduction to Geotechnical Engineering
5. AISC, Steel Construction Manual, 13th Edition
6. Highway Innovative Technology Evaluation Center (HITEC), Evaluation of the Con/Span Wingwall System, CERF Report #40580, July 2001.
7. Contract Plans (VAOT)

Assumptions:

1. It is assumed that the failure plane of the soil to be retained by this wall will lie within the proposed backfill material.
2. The proposed backfill material will meet the material requirements of the contract plans and be constructed to meet the requirements of the contract documents. This material is assumed to have a friction angle = 34 degrees and a dry unit weight = 140 pcf.
3. The installation of the weepholes will preclude the development of hydrostatic pressures on the wall.
4. Passive earth pressure in front of the wall is ignored per AASHTO 11.6.3.5.
5. Site Layout. Roadway Skew 35 degrees. (3) wingwall designs due to varying design height and backfill slope.
6. Backslope Angle. WW1 2:1 at 25 degrees. WW2 and WW3 flat. WW4 flat then 2:1 - Use 5:1 for design. Use infinite backslopes for designs (Break_In_Slope = 0, see below).
7. Live Load Surcharge. N/A - traffic is well belond H/2 for all cases.
8. The HITEC Evaluation (page 3) explains that the Anchor Wall acts as a cantilever wall for most of its length since the weight of the soil within and above the anchors provides resistance to overturning. The wall also has attributes of a bin wall since arching and friction of soil masses between anchors provides additional resistance. Therefore, the provisions of AASHTO Sections 11.6 (Conventional Retaining Walls) and 11.11 (Modular Walls) shall be applied.
9. Per AASHTO 11.11.4.4, a maximum of 80% of the weight of the retained soil is effective in resisting overturning. The HITEC Evaluation (pages D29-D33) evaluated the accuracy of this assumption and found that using 80% of the soil weight is a conservative assumption.
10. The Top of Wingwall elevations are 2 inches below the top of headwall elevations.

General Input:

$ELV_{walltop} := 1013.49ft - 2in$	Elevation of the Wingwall at its tallest point
$ELV_{walltip} := 1013.49ft - 2in$	Elevation of Wingwall at its tip.
$ELV_{bot.ftg} := 1001.08ft$	Elevation of the Bottom of the Wall Footing
$t_{ftg} := 10in$	Pedestal Footing design, separate
$h_{ftg} := 0ft$	Pedestal Footing design, separate
$h_{short} := ELV_{walltip} - ELV_{bot.ftg} - h_{ftg} - 1in = 12.16ft$	Short end of wall (less 1" for shim)
$h_{tall} := ELV_{walltop} - ELV_{bot.ftg} - h_{ftg} - 1in = 12.16ft$	Tall end of wall (less 1" for shim)
$l_{wall} := 12ft$	Length of Wall Panel
$l_{flat} := 1ft$	Length of flat portion of wingwall before break in slope.
$t_{wall} := 10in$	Thickness of Wall Panel
$t_{stem} := 6in$	Thickness of Anchor Stem
$w_{flange} := 2ft + 6in$	Width of Anchor Flange
$\alpha_{skew} := 0deg$	Angle of ww skew in plan view, measured from edge of roadway. (to measure distance to traffic for each anchor)
$\theta_{wall} := 90deg$	Wall batter angle with horizontal
$\theta_{anchor} := \theta_{wall} + 30deg$	Anchor batter angle with horizontal
$\beta := atan\left(\frac{1}{5}\right) = 11.31 \cdot deg$	Backfill slope angle with horizontal, measured perpendicular to the wall.
$d_{traffic} := 35ft$	Estimated minimum distance to traffic, measured from backfill side of wall and perpendicular to the wall.
$BreakInSlope := 0ft$	Assumed distance from face of guardrail to break-in-slope, meaured perpendicular to the wall.

Wall Material Properties

Concrete

$f_c := 5000 \frac{lbf}{in^2}$ $E_c := 4074ksi$ $Aggregate_{diam} := .75in$

$\gamma_c := 150pcf$ Assumed unit weight of concrete panel.

β_1 = Stress Block Factor specified in Article 5.7.2.2

$$\beta_1 := \max\left[.65, \left[\begin{array}{l} .85 \quad \text{if } f_c < 4000psi \\ .85 - \frac{.05}{psi} \cdot \left(\frac{f_c - 4000psi}{1000}\right) \quad \text{otherwise} \end{array}\right]\right] = 0.8$$

Steel:

$f_y := 60000 \frac{lbf}{in^2}$ $E_s := 29000ksi$

Soil:

$q_R := 10ksf$ Minimum factored bearing resistance given in contract, sht 6

$\gamma_s := 140pcf$ Assumed soil unit weight for all soil

$q_{sur} := 2ft \cdot \gamma_s = 280 \cdot psf$ Surcharge Soil Pressure (AASHTO Tbl 3.11.6.4-2)

$\phi_{ftg} := 36deg$ Friction Angle of Soil below Wall Footing

$\phi_{backfill} := 34deg$ Friction Angle of Backfill Soil

$\delta_{wall} := 0.75 \cdot \phi_{backfill} = 25.5 \cdot deg$ AASHTO C3.11.5.9-1 and HITEC p.D19

$\delta_{anchor} := 0.50 \cdot \phi_{backfill} = 17 \cdot deg$ AASHTO C3.11.5.9-1 and HITEC p.D19

$$k_{a.wall} := \frac{\sin(\theta_{wall} + \phi_{backfill})^2}{\sin(\theta_{wall})^2 \cdot \sin(\theta_{wall} - \delta_{wall}) \cdot \left(1 + \sqrt{\frac{\sin(\phi_{backfill} + \delta_{wall}) \cdot \sin(\phi_{backfill} - \beta)}{\sin(\theta_{wall} - \delta_{wall}) \cdot \sin(\theta_{wall} + \beta)}}\right)^2} = 0.293$$

AASHTO 3.11.5.3

$$k_{a.anchor} := \frac{\sin\left(\theta_{anchor} + \phi_{backfill}\right)^2}{\sin\left(\theta_{anchor}\right)^2 \cdot \sin\left(\theta_{anchor} - \delta_{anchor}\right) \cdot \left(1 + \sqrt{\frac{\sin\left(\phi_{backfill} + \delta_{anchor}\right) \cdot \sin\left(\phi_{backfill} - \beta\right)}{\sin\left(\theta_{anchor} - \delta_{anchor}\right) \cdot \sin\left(\theta_{anchor} + \beta\right)}}\right)^2} = 0.098$$

AASHTO 3.11.5.3

$$k_0 := 1 - \sin\left(\phi_{backfill}\right) = 0.441$$

AASHTO 3.11.5.2-1

Determine Load Factors (Strength I) (AASHTO 1.3 and Table 3.4.1-1)

Load Modifiers

$\eta_D := 1.00$ Ductility for a conventional design

$\eta_R := 1.00$ Redundancy for conventional design

$\eta_I := 1.00$ Importance for a conventional bridge

$\eta_i := \max\left(\eta_D \cdot \eta_R \cdot \eta_I, 0.95\right)$ $\eta_i = 1$

Load Factor	Max	Min	Service	
γ_{DC}	1.25	0.9	1.0	Component Dead Loads
γ_{EH}	1.5	0.9	1.0	Horizontal Earth Loads
γ_{EV}	1.35	1.0	1.0	Vertical Earth Loads
γ_{LL}	1.75	1.75	1.0	Live Loads

Anchor Types, Layout and Backfill Geometry

$ConnectedToBridge := \text{"Yes"}$

To account for the connection of the wing to the bridge. Choose between Yes and No.

$AnchorType_1 := \text{"E"}$

$AnchorType_2 := \text{"E"}$

$AnchorType_3 := \text{"E"}$

Anchor Type to be tied to the back face of the wall. Chosen between Anchor Type B, C, D, and E as defined below.

$dist_{anchor.1} := 4.5ft$

$dist_{anchor.2} := 9.5ft$

$dist_{anchor.3} := 0$

Distance to each anchor is from culvert end of wing. Anchor 1 is closest to culvert.

Note: Research in HITEC report supports spacing from 2.5 ft (anchors are touching) to 5.5 feet (HITEC Report pages D29-D33). If distance between anchors increases beyond 5.5 ft, data supporting the usable 80% soil weight assumption shall be provided due to possible affects on soil arching between the anchors. Similarly, anchor closest to the wall tip shall not exceed 3 feet without supporting data.

If only 1 anchor is used, set $dist_{anchor2} = dist_{anchor3} = 0$.

If only 2 anchors are used, set $dist_{anchor3} = 0$.

Tributary Width of Wall for each Anchor

$$trib_{plates} := \begin{cases} 0 & \text{if } ConnectedToBridge = \text{"No"} \\ \frac{1}{2} \cdot dist_{anchor.1} & \text{otherwise} \end{cases} = 2.25\,ft$$

$$trib_1 := \begin{cases} l_{wall} - trib_{plates} & \text{if } dist_{anchor.2} = 0 \\ \frac{1}{2} \cdot \left(dist_{anchor.1} + dist_{anchor.2}\right) - trib_{plates} & \text{otherwise} \end{cases} = 4.75\,ft$$

$$trib_2 := \begin{cases} \left[l_{wall} - \frac{1}{2}\left(dist_{anchor.1} + dist_{anchor.2}\right)\right] & \text{if } dist_{anchor.3} = 0 \\ \frac{1}{2}\left(dist_{anchor.2} + dist_{anchor.3}\right) - \frac{1}{2}\left(dist_{anchor.1} + dist_{anchor.2}\right) & \text{otherwise} \end{cases} = 5\,ft$$

$$trib_3 := l_{wall} - \left(trib_1 + trib_2 + trib_{plates}\right) = 0\,ft$$

Height of Wall at CL of Each Anchor

$$h(x) := \begin{cases} 0 & \text{if } x = 0 \\ h_{tall} & \text{if } 0 < x \le l_{flat} \\ \left[h_{tall} - \left(\frac{h_{tall} - h_{short}}{l_{wall} - l_{flat}}\right)\cdot\left(x - l_{flat}\right)\right] & \text{otherwise} \end{cases}$$

$h_{wall.1} := h\left(dist_{anchor.1}\right) = 12.16\,ft$

$h_{wall.2} := h\left(dist_{anchor.2}\right) = 12.16\,ft$

$h_{wall.3} := h\left(dist_{anchor.3}\right) = 0\,ft$

Height of wall at each anchor

Length of each Anchor Stem Extension

$$W(x) := \begin{cases} (0ft) & \text{if } x = \text{"B"} \\ (1ft) & \text{if } x = \text{"C"} \\ (2ft) & \text{if } x = \text{"D"} \\ (3ft) & \text{if } x = \text{"E"} \\ (4ft) & \text{if } x = \text{"F"} \end{cases}$$

W is the additional anchor stem length beyond that of a "B" anchor. W(B) = 0

$W_1 := W\left(AnchorType_1\right) = 3\,ft$

$W_2 := W\left(AnchorType_2\right) = 3\,ft$

$W_3 := W\left(AnchorType_3\right) = 3\,ft$

Width of Soil Column above each Anchor

B_{bot} is the width of the soil column at the top of the anchor, measured from backfill side of wall to upper tip of each anchor.

$$B_{bot.1} := W_1 + (3ft + 5.375in) + \frac{7in}{\cos(30deg)} = 7.121\,ft$$

$$B_{bot.2} := W_2 + (3ft + 5.375in) + \frac{7in}{\cos(30deg)} = 7.121\,ft$$

$$B_{bot.3} := W_3 + (3ft + 5.375in) + \frac{7in}{\cos(30deg)} = 7.121\,ft$$

$B_{bot.lower}$ is the width of the soil column at the bottom of the anchor, measured from backfill side of wall to bottom tip of anchor.

$$B_{bot.lower.1} := W_1 + \left(1ft + 4in + \frac{7in}{\cos(30deg)}\right) = 5.007\,ft$$

$$B_{bot.lower.2} := W_2 + \left(1ft + 4in + \frac{7in}{\cos(30deg)}\right) = 5.007\,ft$$

$$B_{bot.lower.3} := W_3 + \left(1ft + 4in + \frac{7in}{\cos(30deg)}\right) = 5.007\,ft$$

Perpendicular Distance to Traffic at each Anchor

$$d_{traffic.1} := d_{traffic} + dist_{anchor.1} \cdot \tan(\alpha_{skew}) = 35\,ft$$

$$d_{traffic.2} := d_{traffic} + dist_{anchor.2} \cdot \tan(\alpha_{skew}) = 35\,ft$$

$$d_{traffic.3} := d_{traffic} + dist_{anchor.3} \cdot \tan(\alpha_{skew}) = 35\,ft$$

Height of backfill at CL of each anchor

$$d_{slope.1} := \max(0, \min(B_{bot.1}, d_{traffic.1} - BreakInSlope)) = 7.121\,ft$$

$$d_{slope.2} := \max(0, \min(B_{bot.2}, d_{traffic.2} - BreakInSlope)) = 7.121\,ft$$

$$d_{slope.3} := \max(0, \min(B_{bot.3}, d_{traffic.3} - BreakInSlope)) = 7.121\,ft$$

Distance to break in slope, measured perpendicular to wall from inside face of wall, limited by B.bot.

$$h_{backfill.1} := \max(h_{wall.1}, h_{wall.1} + \min(B_{bot.1}, d_{slope.1}) \cdot \tan(\beta)) = 13.584\,ft$$

$$h_{backfill.2} := \max(h_{wall.2}, h_{wall.2} + \min(B_{bot.2}, d_{slope.2}) \cdot \tan(\beta)) = 13.584\,ft$$

$$h_{backfill.3} := \max(h_{wall.3}, h_{wall.3} + \min(B_{bot.3}, d_{slope.3}) \cdot \tan(\beta)) = 1.424\,ft$$

The height of backfill is taken at the end of the reinforced soil mass.

Check Pullout Capacity of Bolts at Connection Plates and Plate Bending

Connection plates connected to the culvert wall provide stability for half the distance of the wall from the culvert to Anchor 1. Per HITEC p. D23, connection is more rigid at the connection with the culvert, therefore use at-rest earth pressure coefficient.

$n_{plates} := 3$ — Number of plates

$h_{wall.plate} := h_{tall} = 12.16\,ft$ — Overall height of wall at plates

$h_{plate1} := 1ft + 9in = 1.75\,ft$ — The plate closest to the ground.
Height is from bottom of wall to bolt line in Plate 1

$h_{plate2} := 4ft + 9in = 4.75\,ft$ — If n_plates is 2, this is the top plate.
Height is from bottom of wall to bolt line in Plate 2

$h_{plate3} := 7ft + 9in = 7.75\,ft$ — If n_plate is 3, this is the top plate. If n_plate is 2, h.plate.3 is unused.
Height is from bottom of wall to bolt line in Plate 3

$h_{plate} := 10in$ — Plate height.

$t_{plate} := 1in$ — Plate thickness

$x_{bolt} := 4.5in$ — Distance from corner of plate to CL of bolt

$Fy_{plate} := 36ksi$ — Yield strength of plates (A36 steel)

$\phi_{bending} := 0.9$ — AISC F1.(1)

$d_{bolt} := 1in$ — Diameter of Coil Insert.

$A_{bolt} := \frac{\pi}{4} \cdot d_{bolt}^{2} = 0.785 \cdot in^{2}$

$n_{bolts} := 2$ — Number of bolts per side per plate

$F_{ub} := 60ksi$ — Tensile Strength of a A307 bolt (AASHTO 6.4.3.1)

$\phi_{bolt} := 0.80$ — Resistance factor for an A307 bolt in tension (AASHTO 6.5.4.2)

$T_{pullout} := \frac{8.5kip}{2} = 4.25 \cdot kip$ — Factored Pullout capacity (SF = 3) of a Meadow Burke Double Wingwall Anchor (1-8NC 6x8) Ferrule Insert with 1" diameter bolt. 8500lbs tension, 4500lbs shear

Calculate Bolt Reaction at Plate 3

$$EH_{plate3} := \frac{1}{2} k_0 \cdot \gamma_s \cdot \left(h_{wall.plate} - \frac{h_{plate3} + h_{plate2}}{2} \right)^2 \cdot trib_{plates} \cdot \cos(\delta_{wall}) = 2.189 \cdot kip$$

$$y_{EH.plate3} := h_{wall.plate} - \frac{2}{3} \left(h_{wall.plate} - \frac{h_{plate3} + h_{plate2}}{2} \right) = 8.22\,ft$$

$$LS_{plate3} := \begin{cases} 0 & \text{if } d_{traffic} \geq \frac{1}{2} \cdot h_{wall.plate} \\ \left[k_0 \cdot q_{sur} \cdot \left(h_{wall.plate} - \frac{h_{plate3} + h_{plate2}}{2} \right) \cdot trib_{plates} \cdot \cos(\delta_{wall}) \right] & \text{otherwise} \end{cases} = 0 \cdot kip$$

$$y_{LS.plate3} := h_{wall.plate} - \frac{1}{2} \left(h_{wall.plate} - \frac{h_{plate3} + h_{plate2}}{2} \right) = 9.205\,ft$$

$$R_{plate3} := \begin{cases} 0 & \text{if } n_{plates} = 2 \\ \frac{1.5 \cdot EH_{plate3} \cdot y_{EH.plate3} + 1.75 \cdot LS_{plate3} \cdot y_{LS.plate3}}{h_{plate3}} & \text{otherwise} \end{cases} = 3.482 \cdot kip$$

Calculate Bolt Reaction at Plate 2

$$EH1_{plate2} := \begin{cases} \left[\left[k_0 \cdot \gamma_s \cdot \left(h_{wall.plate} - \frac{h_{plate3} + h_{plate2}}{2} \right) \cdot \left(\frac{h_{plate3} + h_{plate2}}{2} \ldots + - \frac{h_{plate2} + h_{plate1}}{2} \right) \right] \cdot trib_{plates} \cdot \cos(\delta_{wall}) \right] & \text{if } n_{plates} = 3 \\ \left[\frac{1}{2} k_0 \cdot \gamma_s \cdot \left(h_{wall.plate} - \frac{h_{plate2} + h_{plate1}}{2} \right)^2 \cdot trib_{plates} \cdot \cos(\delta_{wall}) \right] & \text{otherwise} \end{cases} = 2.222 \cdot kip$$

$$y_{EH1.plate2} := \begin{cases} \left[\frac{h_{plate2} + h_{plate1}}{2} + \frac{1}{2} \cdot \left(\frac{h_{plate3} + h_{plate2}}{2} - \frac{h_{plate2} + h_{plate1}}{2} \right) \right] & \text{if } n_{plates} = 3 \\ \frac{h_{plate2} + h_{plate1}}{2} + \frac{1}{2} \cdot \left(h_{wall.plate} - \frac{h_{plate2} + h_{plate1}}{2} \right) & \text{otherwise} \end{cases} = 4.75\,ft$$

$$EH2_{plate2} := \frac{1}{2} k_0 \cdot \gamma_s \cdot \left(\frac{h_{plate3} + h_{plate2}}{2} - \frac{h_{plate2} + h_{plate1}}{2} \right)^2 \cdot trib_{plates} \cdot \cos(\delta_{wall}) = 0.564 \cdot kip$$

$$y_{EH2.plate2} := \begin{cases} \left[\frac{h_{plate2} + h_{plate1}}{2} + \frac{1}{3} \cdot \left(\frac{h_{plate3} + h_{plate2}}{2} - \frac{h_{plate2} + h_{plate1}}{2} \right) \right] & \text{if } n_{plates} = 3 \\ \frac{h_{plate2} + h_{plate1}}{2} + \frac{1}{3} \cdot \left(h_{wall.plate} - \frac{h_{plate2} + h_{plate1}}{2} \right) & \text{otherwise} \end{cases} = 4.25\,ft$$

$$LS_{plate2} := \begin{cases} \left[\left[k_0 \cdot q_{sur} \cdot \left(\frac{h_{plate3} + h_{plate2}}{2} - \frac{h_{plate2} + h_{plate1}}{2}\right) \cdot trib_{plates} \cdot \cos(\delta_{wall})\right]\right] & \text{if } n_{plates} = 3 \\ \left[k_0 \cdot q_{sur} \cdot \left(h_{wall.plate} - \frac{h_{plate2} + h_{plate1}}{2}\right) \cdot trib_{plates} \cdot \cos(\delta_{wall})\right] & \text{otherwise} \\ 0 & \text{if } d_{traffic} \geq \frac{1}{2} \cdot h_{wall.plate} \end{cases} = 0 \cdot kip$$

$$y_{LS.plate2} := \begin{cases} \left[\frac{h_{plate2} + h_{plate1}}{2} + \frac{1}{2} \cdot \left(\frac{h_{plate3} + h_{plate2}}{2} - \frac{h_{plate2} + h_{plate1}}{2}\right)\right] & \text{if } n_{plates} = 3 \\ \left[\frac{h_{plate2} + h_{plate1}}{2} + \frac{1}{2} \cdot \left(h_{wall.plate} - \frac{h_{plate2} + h_{plate1}}{2}\right)\right] & \text{otherwise} \end{cases} = 4.75\,ft$$

$$R_{plate2} := \frac{1.5 \cdot \left(EH1_{plate2} \cdot y_{EH1.plate2} + EH2_{plate2} \cdot y_{EH2.plate2}\right) + 1.75 \cdot LS_{plate2} \cdot y_{LS.plate2}}{h_{plate2}} = 4.09 \cdot kip$$

Calculate Bolt Reaction at Plate 1

$$EH1_{plate1} := k_0 \cdot \gamma_s \cdot \left(h_{wall.plate} - \frac{h_{plate2} + h_{plate1}}{2}\right) \cdot \left(\frac{h_{plate2} + h_{plate1}}{2}\right) \cdot trib_{plates} \cdot \cos(\delta_{wall}) = 3.629 \cdot kip$$

$$y_{EH1.plate1} := \frac{1}{2}\left(\frac{h_{plate2} + h_{plate1}}{2}\right) = 1.625\,ft$$

$$EH2_{plate1} := \frac{1}{2} k_0 \cdot \gamma_s \cdot \left(\frac{h_{plate2} + h_{plate1}}{2}\right)^2 \cdot trib_{plates} \cdot \cos(\delta_{wall}) = 0.662 \cdot kip$$

$$y_{EH2.plate1} := \frac{1}{3} \cdot \left(\frac{h_{plate2} + h_{plate1}}{2}\right) = 1.083\,ft$$

$$LS_{plate1} := \begin{cases} 0 & \text{if } d_{traffic} \geq \frac{1}{2} \cdot h_{wall.plate} \\ \left[k_0 \cdot q_{sur} \cdot \left(\frac{h_{plate2} + h_{plate1}}{2}\right) \cdot trib_{plates} \cdot \cos(\delta_{wall})\right] & \text{otherwise} \end{cases} = 0 \cdot kip$$

$$y_{LS.plate1} := \frac{1}{2} \cdot \left(\frac{h_{plate2} + h_{plate1}}{2}\right) = 1.625\,ft$$

$$R_{plate1} := \frac{1.5 \cdot \left(EH1_{plate1} \cdot y_{EH1.plate1} + EH2_{plate1} \cdot y_{EH2.plate1}\right) + 1.75 \cdot LS_{plate1} \cdot y_{LS.plate1}}{h_{plate1}} = 5.67 \cdot kip$$

Check Bolt Capacity

$T_n := 0.76 \cdot A_{bolt} \cdot F_{ub} = 35.814 \cdot kip$ Nominal Tensile Resistance of a bolt (AASHTO 6.13.2.10)

$T_r := \phi_{bolt} \cdot T_n = 28.651 \cdot kip$

$T_{controlling} := n_{bolts} \cdot \min(T_{pullout}, T_r) = 8.5 \cdot kip$ Controlling tensile capacity, per bolt.

$R_{plate.controlling} := \max(R_{plate1}, R_{plate2}, R_{plate3}) = 5.67 \cdot kip$

$$Check_{BoltCapacity} := \begin{cases} \text{"OK"} & \text{if } T_{controlling} \geq R_{plate.controlling} \\ \text{"NG"} & \text{otherwise} \end{cases} = \text{"OK"}$$

Check Plate Bending

Sum moments about the corner of the plate.

$Mu_{plate} := R_{plate.controlling} \cdot x_{bolt} = 2.126 \cdot kip \cdot ft$

$$Z_{plate} := \frac{h_{plate} \cdot t_{plate}^2}{4} = 2.5 \cdot in^3$$

$Mp_{plate} := Fy_{plate} \cdot Z_{plate} = 7.5 \cdot kip \cdot ft$

$\phi_{bending} \cdot Mp_{plate} = 6.75 \cdot kip \cdot ft$

$$Check_{PlateBending} := \begin{cases} \text{"OK"} & \text{if } Mu_{plate} \leq \phi_{bending} \cdot Mp_{plate} \\ \text{"NG"} & \text{otherwise} \end{cases} = \text{"OK"}$$

External Stability Analysis at Anchor 1

Calculate Vertical Loads and Associated Lever Arms ***(All Lever Arms are from Point "O")***

$$DC_{wall.1} := t_{wall} \cdot h_{wall.1} \cdot \gamma_c = 1.52 \cdot \frac{kip}{ft}$$

$$x_{DC.wall.1} := \frac{1}{2} t_{wall} = 0.417\,ft$$

$$EV1a_1 := \frac{1}{2} \gamma_s \cdot \left(h_{backfill.1} - h_{wall.1}\right) \cdot \left(d_{slope.1}\right) = 0.71 \cdot \frac{kip}{ft}$$

$$x_{EV1a.1} := t_{wall} + \frac{2}{3} d_{slope.1} = 5.581\,ft$$

$$EV1b_1 := \gamma_s \cdot \left(h_{backfill.1} - h_{wall.1}\right) \cdot \left(B_{bot.1} - d_{slope.1}\right) = 0 \cdot \frac{kip}{ft}$$

$$x_{EV1b.1} := t_{wall} + d_{slope.1} + \frac{1}{2}\left(B_{bot.1} - d_{slope.1}\right) = 7.955\,ft$$

$$EV2_1 := \gamma_s \cdot \left(h_{wall.1} - 3.5ft\right) \cdot B_{bot.1} = 8.634 \cdot \frac{kip}{ft}$$

$$x_{EV2.1} := t_{wall} + \frac{1}{2} B_{bot.1} = 4.394\,ft$$

$$EV3_1 := \gamma_s \cdot (3.5ft) \cdot \left(B_{bot.lower.1} - \frac{7in}{\cos(30deg)}\right) = 2.123 \cdot \frac{kip}{ft}$$

$$x_{EV3.1} := t_{wall} + \frac{1}{2}\left(B_{bot.lower.1} - \frac{7in}{\cos(30deg)}\right) = 3\,ft$$

$$EV4_1 := \gamma_s \cdot \frac{1}{2} \cdot 3.5ft \cdot \left[\left(W_1 + 3ft + 5.375in\right) - \left(B_{bot.lower.1} - \frac{7in}{\cos(30deg)}\right)\right] = 0.518 \cdot \frac{kip}{ft}$$

$$x_{EV4.1} := t_{wall} + B_{bot.lower.1} + \frac{1}{3} \cdot \left[W_1 + 3ft + 5.375in - \left(B_{bot.lower.1} - \frac{7in}{\cos(30deg)}\right)\right] = 6.545\,ft$$

$$DC_{anchor.1} := \frac{1}{trib_1} \cdot \begin{cases} (1740lbf) & \text{if } AnchorType_1 = \text{"B"} \\ (2010lbf) & \text{if } AnchorType_1 = \text{"C"} \\ (2285lbf) & \text{if } AnchorType_1 = \text{"D"} \\ (2550lbf) & \text{if } AnchorType_1 = \text{"E"} \\ (2825lbf) & \text{if } AnchorType_1 = \text{"F"} \end{cases} = 0.537 \cdot \frac{kip}{ft}$$

(See Anchor Geometry Drawing)

$$x_{anchor.1} := t_{wall} + \begin{cases} (2ft + 2.25in) & \text{if } AnchorType_1 = \text{"B"} \\ (2ft + 8.8125in) & \text{if } AnchorType_1 = \text{"C"} \\ (3ft + 5.125in) & \text{if } AnchorType_1 = \text{"D"} \\ 4ft + 0.0625in & \text{if } AnchorType_1 = \text{"E"} \\ (4ft + 8in) & \text{if } AnchorType_1 = \text{"F"} \end{cases} = 4.839 \cdot ft$$

$$LS_{vert.1} := \begin{cases} \left[q_{sur} \cdot \left[B_{bot.1} - \left(d_{traffic.1}\right)\right]\right] & \text{if } d_{traffic.1} < B_{bot.1} \\ 0 & \text{otherwise} \end{cases} = 0 \cdot \frac{kip}{ft}$$

Used in bearing calcs only

$$x_{LS.vert.1} := t_{wall} + d_{traffic.1} + \frac{1}{2}\left(B_{bot.1} - d_{traffic.1}\right) = 21.894\,ft$$

$$DC_{ftg.1} := \gamma_c \cdot t_{ftg} \cdot h_{ftg} = 0 \cdot \frac{kip}{ft}$$

$$x_{DC.ftg.1} := \frac{t_{ftg}}{2} = 0.417\,ft$$

Note: This moment arm is measured from the front toe of the ftg since it is only used in bearing calculations.

Calculate Lateral Loads and Associated Lever Arms

$$EH1_{1.vert} := \frac{1}{2} k_{a.wall} \cdot \gamma_s \cdot \left(h_{backfill.1} - 3.5ft\right)^2 \cdot \sin\left(\delta_{wall}\right) = 0.897 \cdot \frac{kip}{ft}$$

$$EH1_{1.hor} := \frac{1}{2} k_{a.wall} \cdot \gamma_s \cdot \left(h_{backfill.1} - 3.5ft\right)^2 \cdot \cos\left(\delta_{wall}\right) = 1.881 \cdot \frac{kip}{ft}$$

$$x_{EH1.1} := t_{wall} + B_{bot.1} = 7.955\,ft$$

$$y_{EH1.1} := 3.5ft + \frac{1}{3}\left(h_{backfill.1} - 3.5ft\right) = 6.861\,ft$$

$$EH2_{1.vert} := k_{a.anchor} \cdot \gamma_s \cdot \left(h_{backfill.1} - 3.5ft\right) \cdot (4ft) \cdot \sin\left(\delta_{anchor} - 30deg\right) = -0.124 \cdot \frac{kip}{ft}$$

$$EH2_{1.hor} := k_{a.anchor} \cdot \gamma_s \cdot \left(h_{backfill.1} - 3.5ft\right) \cdot (4ft) \cdot \cos\left(\delta_{anchor} - 30deg\right) = 0.538 \cdot \frac{kip}{ft}$$

$$x_{EH2.1} := t_{wall} + \frac{1}{2}\left(B_{bot.1} + B_{bot.lower.1}\right) = 6.898\,ft$$

$$y_{EH2.1} := 3.5ft - \frac{1}{2} \cdot 4ft = 1.5\,ft$$

$$EH3_{1.vert} := \frac{1}{2} k_{a.anchor} \cdot \gamma_s \cdot (4ft)^2 \cdot \sin\left(\delta_{anchor} - 30deg\right) = -0.025 \cdot \frac{kip}{ft}$$

$$EH3_{1.hor} := \frac{1}{2} k_{a.anchor} \cdot \gamma_s \cdot (4ft)^2 \cdot \cos\left(\delta_{anchor} - 30deg\right) = 0.107 \cdot \frac{kip}{ft}$$

$$x_{EH3.1} := t_{wall} + B_{bot.lower.1} + \left(3.5ft - \frac{2}{3}\cdot 4ft\right)\tan(30deg) = 6.321\,ft$$

$$y_{EH3.1} := 3.5ft - \frac{2}{3}\cdot 4ft = 10\cdot in$$

$$LS_{hor.1} := \begin{cases} \left(k_{a.wall}\cdot q_{sur}\cdot h_{backfill.1}\right) & \text{if } d_{traffic.1} < \frac{h_{wall.1}}{2} \\ 0 & \text{otherwise} \end{cases} = 0\cdot\frac{kip}{ft}$$

$$x_{LS.hor.1} := t_{wall} + \frac{1}{2}\left(B_{bot.lower.1} + B_{bot.1}\right) = 6.898\,ft$$ (Assumed for ease of calculation)

$$y_{LS.hor.1} := \frac{1}{2}h_{backfill.1} = 6.792\,ft$$

Check Sliding

Per AASHTO 11.11.4.2, Sliding shall be evaluated according to 10.6.3.4. Per 11.5.3, sliding shall be evaluated at the strength limit state. Use minimum load factors for vertical loads and maximum load factors for horizontal loads. Assume the failure plane is beneath the wall ftg, which will be grouted to the wall during construction. This is consistent with assumptions in the HITEC report (page D24).

Resisting Forces

$$\phi_{\tau} := 0.9$$ AASHTO Table 10.5.5.2.2-1, "Precast on Sand" or "Soil on Soil"

$$\Sigma V_1 := 0.9\left(DC_{wall.1} + DC_{anchor.1} + DC_{ftg.1}\right) + 1.0\cdot\left(EV1a_1 + EV1b_1 + EV2_1 + EV3_1 + EV4_1\right) \ldots + \eta_i\cdot 1.50\cdot\left(EH1_{1.vert} + EH2_{1.vert} + EH3_{1.vert}\right) = 14.959\cdot\frac{kip}{ft}$$

$$R_{\tau.1} := 0.8\cdot\tan\left(\phi_{ftg}\right)\cdot\Sigma V_1 = 8.695\cdot\frac{kip}{ft}$$ AASHTO 10.6.3.4

$$\boxed{R_{r.1} := \phi_{\tau}\cdot R_{\tau.1} = 7.825\cdot\frac{kip}{ft}}$$

Driving Forces

$$\Sigma H_{\tau.1} := \eta_i\cdot\left[1.50\cdot\left(EH1_{1.hor} + EH2_{1.hor} + EH3_{1.hor}\right) + 1.75LS_{hor.1}\right] = 3.788\cdot\frac{kip}{ft}$$

$$Check_{sliding.1} := \begin{cases} \text{"OK"} & \text{if } \frac{R_{r.1}}{\Sigma H_{\tau.1}} \geq 1 \\ \text{"NG"} & \text{otherwise} \end{cases} = \text{"OK"}$$

Check Overturning and Eccentricity

Per AASHTO 11.11.4.4, Overturning shall be evaluated according to 11.6.3.3. A maximum of 80% of the retained soil shall be used to resist overturning. Per 11.6.3.3, evaluate overturning and eccentricity at the strength limit state using maximum load factors for horizontal loads and minimum load factors for vertical loads. First, evaluate overturning about front base of wall. If the wall passes the overturning check, the wing will not experience uplift with respect to the footing. Therefore evaluate eccentricity at the bottom of the footing. The location of the resultant of the reaction forces shall be located within the middle half of the base width (footing width plus anchor projection). Eccentricity is measured from the center of the base width toward the stream side of the footing. Assume that a negative eccentricity (beyond the center of the base, toward the backfill) is acceptable since this condition will engage passive earth pressures.

Resisting Forces

$$\begin{aligned} Resisting_1 := {} & 0.9\left(DC_{wall.1}\cdot x_{DC.wall.1} + DC_{anchor.1}\cdot x_{anchor.1}\right) \ldots \\ & + 1.0\cdot 0.8\cdot\left(EV1a_1\cdot x_{EV1a.1} + EV1b_1\cdot x_{EV1b.1} + EV2_1\cdot x_{EV2.1} + EV3_1\cdot x_{EV3.1} + EV4_1\cdot x_{EV4.1}\right) \ldots \\ & + 1.50\left(EH1_{1.vert}\cdot x_{EH1.1} + EH2_{1.vert}\cdot x_{EH2.1} + EH3_{1.vert}\cdot x_{EH3.1}\right) \end{aligned} = 53.424\cdot\frac{kip\cdot ft}{ft}$$

Driving Forces

$$Driving_1 := 1.50\cdot\left(EH1_{1.hor}\cdot y_{EH1.1} + EH2_{1.hor}\cdot y_{EH2.1} + EH3_{1.hor}\cdot y_{EH3.1}\right) + 1.75LS_{hor.1}\cdot y_{LS.hor.1} = 20.703\cdot\frac{kip\cdot ft}{ft}$$

$$Check_{OT.1} := \begin{cases} \text{"OK"} & \text{if } \dfrac{Resisting_1}{Driving_1} \ge 1 \\ \text{"NG"} & \text{otherwise} \end{cases} = \text{"OK"}$$

Eccentricity of Resultant

$$\begin{aligned} \Sigma V_{e.1} := {} & 0.9\left(DC_{wall.1} + DC_{anchor.1}\right) + 1.0\cdot 0.8\cdot\left(EV1a_1 + EV1b_1 + EV2_1 + EV3_1 + EV4_1\right) \ldots \\ & + 1.50\left(EH1_{1.vert} + EH2_{1.vert} + EH3_{1.vert}\right) \end{aligned} = 12.562\cdot\frac{kip}{ft}$$

$$l_1 := \frac{\left[\Sigma V_{e.1}\cdot\left[\dfrac{\left(Resisting_1 - Driving_1\right)}{\Sigma V_{e.1}} + \dfrac{1}{2}\left(t_{ftg} - t_{wall}\right)\right] + 0.9DC_{ftg.1}\cdot x_{DC.ftg.1}\right]}{\Sigma V_{e.1} + 0.9DC_{ftg.1}} = 2.605\,ft$$

(Distance to resultant from face of ftg)

$$B_1 := B_{bot.lower.1} + t_{wall} + \frac{1}{2}\left(t_{ftg} - t_{wall}\right) = 5.84\,ft$$

$$e_1 := \max\left(\frac{B_1}{2} - l_1, 0ft\right) = 0.315\,ft$$

$$e_{allow.1} := \frac{B_1}{4} = 1.46\,ft$$

(Within Middle Half of ftg per AASHTO 11.6.3.3)

$$Check_{e.1} := \begin{cases} \text{"OK"} & \text{if } \frac{e_1}{e_{allow.1}} \le 1 \\ \text{"NG"} & \text{otherwise} \end{cases} = \text{"OK"}$$

Check Bearing Pressure

Per 11.11.4.3 Evaluate bearing pressure with respect to resistance calculated in 10.6.3. Per HITEC p. D24, use the horizontal portion of the anchor at its base plus the footing width. Evaluate at the strength limit state. Use 100% of the weight of the retained soil. When Live Load Surcharge is present, Strength I with maximum load factors for vertical loads and horizontal loads controls. Include the effects of live load surcharge. Since lever arms are calculated from the front face of the wall, must add to the eccentricity the distance between wall and toe of footing.

$$\begin{aligned} Resisting_{brg.1} := {} & 1.25\left(DC_{wall.1}\cdot x_{DC.wall.1} + DC_{anchor.1}\cdot x_{anchor.1}\right) \ldots \\ & + 1.35\cdot\left(EV1a_1\cdot x_{EV1a.1} + EV1b_1\cdot x_{EV1b.1} + EV2_1\cdot x_{EV2.1} + EV3_1\cdot x_{EV3.1} + EV4_1\cdot x_{EV4.1}\right) \ldots \\ & + 1.35\left(EH1_{1.vert}\cdot x_{EH1.1} + EH2_{1.vert}\cdot x_{EH2.1} + EH3_{1.vert}\cdot x_{EH3.1}\right) \ldots \\ & + 1.75\cdot\left(LS_{vert.1}\cdot x_{LS.vert.1}\right) \end{aligned} = 82.051\cdot\frac{kip\cdot ft}{ft}$$

$$Driving_{brg.1} := 1.35\left(EH1_{1.hor}\cdot y_{EH1.1} + EH2_{1.hor}\cdot y_{EH2.1} + EH3_{1.hor}\cdot y_{EH3.1}\right) + 1.75LS_{hor.1}\cdot y_{LS.hor.1} = 18.632\cdot\frac{kip\cdot ft}{ft}$$

$$\begin{aligned} \Sigma V_{brg.1} := {} & 1.25\cdot\left(DC_{wall.1} + DC_{anchor.1}\right) + 1.35\cdot\left(EV1a_1 + EV1b_1 + EV2_1 + EV3_1 + EV4_1\right) \ldots \\ & + 1.35\cdot\left(EH1_{1.vert} + EH2_{1.vert} + EH3_{1.vert}\right) + 1.75\cdot\left(LS_{vert.1}\right) \end{aligned} = 19.762\cdot\frac{kip}{ft}$$

$$l_{brg.1} := \frac{\left[\Sigma V_{brg.1}\cdot\left[\frac{\left(Resisting_{brg.1} - Driving_{brg.1}\right)}{\Sigma V_{brg.1}} + \frac{1}{2}\left(t_{ftg} - t_{wall}\right)\right] + 1.25DC_{ftg.1}\cdot x_{DC.ftg.1}\right]}{\Sigma V_{brg.1} + 1.25DC_{ftg.1}} = 3.209\,ft$$

(Distance to resultant from face of ftg)

$$e_{brg.1} := \max\left(\frac{B_1}{2} - l_{brg.1}, 0ft\right) = 0\,ft$$

$$\sigma_{foot.1} := \frac{\Sigma V_{brg.1}}{B_1 - 2\cdot e_{brg.1}} = 3.384\cdot ksf$$

Eq. 11.6.3.2-1, Rectangular Distibution for Foundations on soil

$$q_R = 10\cdot ksf$$

$$CheckBearing_1 := \begin{cases} \text{"OK"} & \text{if } \frac{q_R}{\sigma_{foot.1}} \ge 1 \\ \text{"NG"} & \text{otherwise} \end{cases} = \text{"OK"}$$

External Stability Analysis at Anchor 2

Calculate Vertical Loads and Associated Lever Arms ***(All Lever Arms are from Point "O")***

$$DC_{wall.2} := t_{wall} \cdot h_{wall.2} \cdot \gamma_c = 1.52 \cdot \frac{kip}{ft}$$

$$x_{DC.wall.2} := \frac{1}{2} t_{wall} = 0.417\,ft$$

$$EV1a_2 := \frac{1}{2} \gamma_s \cdot \left(h_{backfill.2} - h_{wall.2}\right) \cdot \left(d_{slope.2}\right) = 0.71 \cdot \frac{kip}{ft}$$

$$x_{EV1a.2} := t_{wall} + \frac{2}{3} d_{slope.2} = 5.581\,ft$$

$$EV1b_2 := \gamma_s \cdot \left(h_{backfill.2} - h_{wall.2}\right) \cdot \left(B_{bot.2} - d_{slope.2}\right) = 0 \cdot \frac{kip}{ft}$$

$$x_{EV1b.2} := t_{wall} + d_{slope.2} + \frac{1}{2}\left(B_{bot.2} - d_{slope.2}\right) = 7.955\,ft$$

$$EV2_2 := \gamma_s \cdot \left(h_{wall.2} - 3.5ft\right) \cdot B_{bot.2} = 8.634 \cdot \frac{kip}{ft}$$

$$x_{EV2.2} := t_{wall} + \frac{1}{2} B_{bot.2} = 4.394\,ft$$

$$EV3_2 := \gamma_s \cdot (3.5ft) \cdot \left(B_{bot.lower.2} - \frac{7in}{\cos(30deg)}\right) = 2.123 \cdot \frac{kip}{ft}$$

$$x_{EV3.2} := t_{wall} + \frac{1}{2}\left(B_{bot.lower.2} - \frac{7in}{\cos(30deg)}\right) = 3\,ft$$

$$EV4_2 := \gamma_s \cdot \frac{1}{2} \cdot 3.5ft \cdot \left[\left(W_2 + 3ft + 5.375in\right) - \left(B_{bot.lower.2} - \frac{7in}{\cos(30deg)}\right)\right] = 0.518 \cdot \frac{kip}{ft}$$

$$x_{EV4.2} := t_{wall} + B_{bot.lower.2} + \frac{1}{3} \cdot \left[W_2 + 3ft + 5.375in - \left(B_{bot.lower.2} - \frac{7in}{\cos(30deg)}\right)\right] = 6.545\,ft$$

$$DC_{anchor.2} := \frac{1}{trib_2} \cdot \left[\begin{array}{l} (1740lbf) \text{ if } AnchorType_2 = \text{"B"} \\ (2010lbf) \text{ if } AnchorType_2 = \text{"C"} \\ (2285lbf) \text{ if } AnchorType_2 = \text{"D"} \\ (2550lbf) \text{ if } AnchorType_2 = \text{"E"} \\ (2825lbf) \text{ if } AnchorType_2 = \text{"F"} \end{array}\right] = 0.51 \cdot \frac{kip}{ft}$$

(See Anchor Geometry Drawing)

$$x_{anchor.2} := t_{wall} + \begin{cases} (2ft + 2.25in) & \text{if } AnchorType_2 = \text{"B"} \\ (2ft + 8.8125in) & \text{if } AnchorType_2 = \text{"C"} \\ (3ft + 5.125in) & \text{if } AnchorType_2 = \text{"D"} \\ (4ft + 0.0625in) & \text{if } AnchorType_2 = \text{"E"} \\ (4ft + 8in) & \text{if } AnchorType_2 = \text{"F"} \end{cases} = 4.839 \cdot ft$$

$$LS_{vert.2} := \begin{cases} \left[q_{sur} \cdot \left[B_{bot.2} - \left(d_{traffic.2}\right)\right]\right] & \text{if } d_{traffic.2} < B_{bot.2} \\ 0 & \text{otherwise} \end{cases} = 0 \cdot \frac{kip}{ft}$$

Used in bearing calcs only

$$x_{LS.vert.2} := t_{wall} + d_{traffic.2} + \frac{1}{2}\left(B_{bot.2} - d_{traffic.2}\right) = 21.894\,ft$$

$$DC_{ftg.2} := \gamma_c \cdot t_{ftg} \cdot h_{ftg} = 0 \cdot \frac{kip}{ft}$$

$$x_{DC.ftg.2} := \frac{t_{ftg}}{2} = 0.417\,ft$$

Note: This moment arm is measured from the front toe of the ftg since it is only used in bearing calculations.

Calculate Lateral Loads and Associated Lever Arms

$$EH1_{2.vert} := \frac{1}{2} k_{a.wall} \cdot \gamma_s \cdot \left(h_{backfill.2} - 3.5ft\right)^2 \cdot \sin\left(\delta_{wall}\right) = 0.897 \cdot \frac{kip}{ft}$$

$$EH1_{2.hor} := \frac{1}{2} k_{a.wall} \cdot \gamma_s \cdot \left(h_{backfill.2} - 3.5ft\right)^2 \cdot \cos\left(\delta_{wall}\right) = 1.881 \cdot \frac{kip}{ft}$$

$$x_{EH1.2} := t_{wall} + B_{bot.2} = 7.955\,ft$$

$$y_{EH1.2} := 3.5ft + \frac{1}{3}\left(h_{backfill.2} - 3.5ft\right) = 6.861\,ft$$

$$EH2_{2.vert} := k_{a.anchor} \cdot \gamma_s \cdot \left(h_{backfill.2} - 3.5ft\right) \cdot (4ft) \cdot \sin\left(\delta_{anchor} - 30deg\right) = -0.124 \cdot \frac{kip}{ft}$$

$$EH2_{2.hor} := k_{a.anchor} \cdot \gamma_s \cdot \left(h_{backfill.2} - 3.5ft\right) \cdot (4ft) \cdot \cos\left(\delta_{anchor} - 30deg\right) = 0.538 \cdot \frac{kip}{ft}$$

$$x_{EH2.2} := t_{wall} + \frac{1}{2}\left(B_{bot.2} + B_{bot.lower.2}\right) = 6.898\,ft$$

$$y_{EH2.2} := 3.5ft - \frac{1}{2} \cdot 4ft = 1.5\,ft$$

$$EH3_{2.vert} := \frac{1}{2} k_{a.anchor} \cdot \gamma_s \cdot (4ft)^2 \cdot \sin\left(\delta_{anchor} - 30deg\right) = -0.025 \cdot \frac{kip}{ft}$$

$$EH3_{2.hor} := \frac{1}{2} k_{a.anchor} \cdot \gamma_s \cdot (4ft)^2 \cdot \cos\left(\delta_{anchor} - 30deg\right) = 0.107 \cdot \frac{kip}{ft}$$

$$x_{EH3.2} := t_{wall} + B_{bot.lower.2} + \left(3.5ft - \frac{2}{3}\cdot 4ft\right)\tan(30deg) = 6.321\,ft$$

$$y_{EH3.2} := 3.5ft - \frac{2}{3}\cdot 4ft = 10\cdot in$$

$$LS_{hor.2} := \begin{cases} \left(k_{a.wall}\cdot q_{sur}\cdot h_{backfill.2}\right) & \text{if } d_{traffic.2} < \frac{h_{wall.2}}{2} \\ 0 & \text{otherwise} \end{cases} = 0\cdot\frac{kip}{ft}$$

$$x_{LS.hor.2} := t_{wall} + \frac{1}{2}\left(B_{bot.lower.2} + B_{bot.2}\right) = 6.898\,ft$$ (Assumed for ease of calculation)

$$y_{LS.hor.2} := \frac{1}{2}h_{backfill.2} = 6.792\,ft$$

Check Sliding

Per AASHTO 11.11.4.2, Sliding shall be evaluated according to 10.6.3.4. Per 11.5.3, sliding shall be evaluated at the strength limit state. Use minimum load factors for vertical loads and maximum load factors for horizontal loads. Assume the failure plane is beneath the wall ftg, which will be grouted to the wall during construction. This is consistent with assumptions in the HITEC report (page D24).

Resisting Forces

$$\phi_\tau := 0.9$$ AASHTO Table 10.5.5.2.2-1, "Precast on Sand" or "Soil on Soil"

$$\Sigma V_2 := 0.9\left(DC_{wall.2} + DC_{anchor.2} + DC_{ftg.2}\right) + 1.0\cdot\left(EV1a_2 + EV1b_2 + EV2_2 + EV3_2 + EV4_2\right) \ldots = 14.935\cdot\frac{kip}{ft}$$
$$+\eta_i\cdot 1.50\cdot\left(EH1_{2.vert} + EH2_{2.vert} + EH3_{2.vert}\right)$$

$$R_{\tau.2} := 0.8\cdot\tan\left(\phi_{ftg}\right)\cdot\Sigma V_2 = 8.681\cdot\frac{kip}{ft}$$ AASHTO 10.6.3.4

$$\boxed{R_{r.2} := \phi_\tau\cdot R_{\tau.2} = 7.813\cdot\frac{kip}{ft}}$$

Driving Forces

$$\Sigma H_{\tau.2} := \eta_i\cdot\left[1.50\cdot\left(EH1_{2.hor} + EH2_{2.hor} + EH3_{2.hor}\right) + 1.75LS_{hor.2}\right] = 3.788\cdot\frac{kip}{ft}$$

$$Check_{sliding.2} := \begin{cases} \text{"OK"} & \text{if } \frac{R_{r.2}}{\Sigma H_{\tau.2}} \ge 1 \\ \text{"NG"} & \text{otherwise} \end{cases} = \text{"OK"}$$

Check Overturning and Eccentricity

Per AASHTO 11.11.4.4, Overturning shall be evaluated according to 11.6.3.3. A maximum of 80% of the retained soil shall be used to resist overturning. Per 11.6.3.3, evaluate overturning and eccentricity at the strength limit state using maximum load factors for horizontal loads and minimum load factors for vertical loads. First, evaluate overturning about front base of wall. If the wall passes the overturning check, the wing will not experience uplift with respect to the footing. Therefore evaluate eccentricity at the bottom of the footing. The location of the resultant of the reaction forces shall be located within the middle half of the base width (footing width plus anchor projection). Eccentricity is measured from the center of the base width toward the stream side of the footing. Assume that a negative eccentricity (beyond the center of the base, toward the backfill) is acceptable since this condition will engage passive earth pressures.

Resisting Forces

$$\begin{aligned} Resisting_2 := {} & 0.9\left(DC_{wall.2}\cdot x_{DC.wall.2} + DC_{anchor.2}\cdot x_{anchor.2}\right) \cdots \\ & + 1.0\cdot 0.8\cdot\left(EV1a_2\cdot x_{EV1a.2} + EV1b_2\cdot x_{EV1b.2} + EV2_2\cdot x_{EV2.2} + EV3_2\cdot x_{EV3.2} + EV4_2\cdot x_{EV4.2}\right) \cdots \\ & + 1.50\left(EH1_{2.vert}\cdot x_{EH1.2} + EH2_{2.vert}\cdot x_{EH2.2} + EH3_{2.vert}\cdot x_{EH3.2}\right) \end{aligned} = 53.307\cdot\frac{kip\cdot ft}{ft}$$

Driving Forces

$$Driving_2 := 1.50\cdot\left(EH1_{2.hor}\cdot y_{EH1.2} + EH2_{2.hor}\cdot y_{EH2.2} + EH3_{2.hor}\cdot y_{EH3.2}\right) + 1.75LS_{hor.2}\cdot y_{LS.hor.2} = 20.703\cdot\frac{kip\cdot ft}{ft}$$

$$Check_{OT.2} := \begin{cases} \text{"OK"} & \text{if } \dfrac{Resisting_2}{Driving_2} \ge 1 \\ \text{"NG"} & \text{otherwise} \end{cases} = \text{"OK"}$$

Eccentricity of Resultant

$$\begin{aligned} \Sigma V_{e.2} := {} & 0.9\left(DC_{wall.2} + DC_{anchor.2}\right) + 1.0\cdot 0.8\cdot\left(EV1a_2 + EV1b_2 + EV2_2 + EV3_2 + EV4_2\right) \cdots \\ & + 1.50\left(EH1_{2.vert} + EH2_{2.vert} + EH3_{2.vert}\right) \end{aligned} = 12.538\cdot\frac{kip}{ft}$$

$$l_2 := \frac{\left[\Sigma V_{e.2}\cdot\left[\dfrac{\left(Resisting_2 - Driving_2\right)}{\Sigma V_{e.2}} + \dfrac{1}{2}\left(t_{ftg} - t_{wall}\right)\right] + 0.9DC_{ftg.2}\cdot x_{DC.ftg.2}\right]}{\Sigma V_{e.2} + 0.9DC_{ftg.2}} = 2.6\,ft$$

(Distance to resultant from face of ftg)

$$B_2 := B_{bot.lower.2} + t_{wall} + \frac{1}{2}\left(t_{ftg} - t_{wall}\right) = 5.84\,ft$$

$$e_2 := \max\left(\frac{B_2}{2} - l_2, 0ft\right) = 0.32\,ft$$

$$e_{allow.2} := \frac{B_2}{4} = 1.46\,ft$$

(Within Middle Half of ftg per AASHTO 11.6.3.3)

$$Check_{e.2} := \begin{cases} \text{"OK"} & \text{if } \dfrac{e_2}{e_{allow.2}} \le 1 \\ \text{"NG"} & \text{otherwise} \end{cases} = \text{"OK"}$$

Check Bearing Pressure

Per 11.11.4.3 Evaluate bearing pressure with respect to resistance calculated in 10.6.3. Per HITEC p. D24, use the horizontal portion of the anchor at its base plus the footing width. Evaluate at the strength limit state. Use 100% of the weight of the retained soil. When Live Load Surcharge is present, Strength I with maximum load factors for vertical loads and horizontal loads controls. Include the effects of live load surcharge. Since lever arms are calculated from the front face of the wall, must add to the eccentricity the distance between wall and toe of footing.

$$\begin{aligned} Resisting_{brg.2} := {} & 1.25\left(DC_{wall.2}\cdot x_{DC.wall.2} + DC_{anchor.2}\cdot x_{anchor.2}\right) \ldots \\ & + 1.35\cdot\left(EV1a_2\cdot x_{EV1a.2} + EV1b_2\cdot x_{EV1b.2} + EV2_2\cdot x_{EV2.2} + EV3_2\cdot x_{EV3.2} + EV4_2\cdot x_{EV4.2}\right) \ldots \\ & + 1.35\left(EH1_{2.vert}\cdot x_{EH1.2} + EH2_{2.vert}\cdot x_{EH2.2} + EH3_{2.vert}\cdot x_{EH3.2}\right) \ldots \\ & + 1.75\cdot\left(LS_{vert.2}\cdot x_{LS.vert.2}\right) \end{aligned} = 81.888\cdot\frac{kip\cdot ft}{ft}$$

$$Driving_{brg.2} := 1.35\left(EH1_{2.hor}\cdot y_{EH1.2} + EH2_{2.hor}\cdot y_{EH2.2} + EH3_{2.hor}\cdot y_{EH3.2}\right) + 1.75LS_{hor.2}\cdot y_{LS.hor.2} = 18.632\cdot\frac{kip\cdot ft}{ft}$$

$$\begin{aligned} \Sigma V_{brg.2} := {} & 1.25\cdot\left(DC_{wall.2} + DC_{anchor.2}\right) + 1.35\cdot\left(EV1a_2 + EV1b_2 + EV2_2 + EV3_2 + EV4_2\right) \ldots \\ & + 1.35\cdot\left(EH1_{2.vert} + EH2_{2.vert} + EH3_{2.vert}\right) + 1.75\cdot\left(LS_{vert.2}\right) \end{aligned} = 19.728\cdot\frac{kip}{ft}$$

$$l_{brg.2} := \frac{\left[\Sigma V_{brg.2}\cdot\left[\dfrac{\left(Resisting_{brg.2} - Driving_{brg.2}\right)}{\Sigma V_{brg.2}} + \dfrac{1}{2}\left(t_{ftg} - t_{wall}\right)\right] + 1.25DC_{ftg.2}\cdot x_{DC.ftg.2}\right]}{\Sigma V_{brg.2} + 1.25DC_{ftg.2}} = 3.206\,ft$$

(Distance to resultant from face of ftg)

$$e_{brg.2} := \max\left(\frac{B_2}{2} - l_{brg.2}, 0ft\right) = 0\,ft$$

$$\sigma_{foot.2} := \frac{\Sigma V_{brg.2}}{B_2 - 2\cdot e_{brg.2}} = 3.378\cdot ksf$$

Eq. 11.6.3.2-1, Rectangular Distibution for Foundations on soil

$$q_R = 10\cdot ksf$$

$$CheckBearing_2 := \begin{cases} \text{"OK"} & \text{if } \dfrac{q_R}{\sigma_{foot.2}} \ge 1 \\ \text{"NG"} & \text{otherwise} \end{cases} = \text{"OK"}$$

Check Wall Reinforcement

Assume the wall stem is cantilevered above the anchor. Use tallest wall section above anchor. Use maximum horizontal load factors to calculate moments and shears. Use minimum load factor for axial compression.

Calculate Horizontal Loads and resp. Lever Arms at top of Anchor

$h_{wall.internal} := h_{backfill.1} - 3.5ft = 10.084\,ft$

$EH_{wall} := \frac{1}{2} k_{a.wall} \cdot \gamma_s \cdot h_{wall.internal}^2 = 2.084 \cdot \frac{kip}{ft}$ $\qquad y_{EH.wall} := \frac{1}{3} h_{wall.1} = 4.053\,ft$

$LS_{wall} := \begin{cases} 0 & \text{if } d_{traffic.1} \geq \frac{1}{2} \cdot h_{wall.1} \\ \left(k_{a.wall} \cdot q_{sur} \cdot h_{wall.internal}\right) & \text{otherwise} \end{cases} = 0 \cdot \frac{kip}{ft}$ $\qquad y_{LS.wall} := \frac{1}{2} h_{wall.1} = 6.08\,ft$

$Mu_{wall} := \eta_i \cdot \left(1.5 \cdot EH_{wall} \cdot y_{EH.wall} + 1.75 LS_{wall} \cdot y_{LS.wall}\right) = 12.67 \cdot \frac{kip \cdot ft}{ft}$

$Vu_{wall} := \eta_i \cdot \left(1.5 EH_{wall} + 1.75 LS_{wall}\right) = 3.126 \cdot \frac{kip}{ft}$

$Nu_{wall} := -\eta_i \cdot \left(0.9 \cdot \gamma_c \cdot t_{wall} \cdot h_{wall.internal}\right) = -1.134 \cdot \frac{kip}{ft}$

Check Moment Capacity

$bar_{wall} := 6$ $\qquad s_{wall} := 12in$ $\qquad cover_{wall} := 1.5in$

$b_w := 1ft$

$diam_{wall} := \frac{bar_{wall}}{8} in = 0.75 \cdot in$

$As_{wall} := \frac{\pi \cdot diam_{wall}^2}{4} \cdot 12 \frac{in}{s_{wall}} = 0.442 \cdot in^2$

$d_{wall} := t_{wall} - cover_{wall} - \frac{diam_{wall}}{2} = 8.125 \cdot in$

$\phi_{moment} := 0.90$ Per AASHTO 5.5.4.2.1

$\phi_{shear} := 0.90$ Per AASHTO 5.5.4.2.1

Verify that f_y can be substituted for f_s in the equations of 5.7.3.2. This is allowed when

$\frac{c}{d_s} \le 0.60$.

$c_{wall} := \frac{As_{wall} \cdot f_y}{0.85 \cdot f_c \cdot \beta_1 \cdot b_w} = 0.65 \cdot in$ Simplified equation 5.7.3.1.2-4

$\frac{c_{wall}}{d_{wall}} = 0.08$ **This is less than 0.60 therefore f_y can be substituted for f_s**

$a_{wall} := \beta_1 \cdot c_{wall} = 0.52 \cdot in$

$Mn_{wall} := As_{wall} \cdot f_y \cdot \left(d_{wall} - \frac{a_{wall}}{2} \right)$

$Mr_{wall} := \phi_{moment} \cdot Mn_{wall} = 15.636 \cdot kip \cdot ft$

$Mu_{wall} \cdot b_w = 12.67 \cdot kip \cdot ft$

$$Check_{WallFlexure} := \begin{cases} \text{"OK"} & \text{if } \frac{Mr_{wall}}{Mu_{wall} \cdot b_w} \ge 1 \\ \text{"NG"} & \text{otherwise} \end{cases} = \text{"OK"}$$

Check Minimum Flexural Reinforcement (5.7.3.3.2)

$f_r := 0.24 \cdot \sqrt{f_c \cdot ksi} = 0.537 \cdot ksi$ AASHTO 5.4.2.6

$I_{g.wall} := \frac{1}{12} \cdot b_w \cdot t_{wall}^3 = 1 \times 10^3 \cdot in^4$

$y_{t.wall} := \frac{t_{wall}}{2} = 5 \cdot in$ Distance from centroid to extreme tension fibers. Conservatively ignore reinforcement.

$S_{c.wall} := \frac{I_{g.wall}}{y_{t.wall}} = 200 \cdot in^3$

$\gamma_3 := 0.67$ 0.67 = Factor for Grade 60 ASTM A615 rebar

$\gamma_1 := 1.2$ 1.2 = Factor for precast segmental structures

$M_{cr.wall} := \gamma_3 \cdot \gamma_1 \cdot S_{c.wall} \cdot f_r = 7.191 \cdot kip \cdot ft$ Simplified AASHTO Eq 5.7.3.3.2-1

$1.33 Mu_{wall} \cdot b_w = 16.852 \cdot kip \cdot ft$

$$Check_{MinSteelWall} := \begin{cases} \text{"OK"} & \text{if } Mr_{wall} \ge \min\left(1.33 Mu_{wall} \cdot b_w, M_{cr.wall}\right) \\ \text{"NG"} & \text{otherwise} \end{cases} = \text{"OK"}$$

Shear Resistance at Bottom of Wall (Section 5.8.3.4.2)

The section contains less than the minimum transverse reinforcement specified in 5.8.2.5, therefore use equation 5.8.3.4.2-2 to determine the longitudinal strain effect factor (β) at the location of maximum shear.

$Mu := \max(Mu_{wall}, Vu_{wall} \cdot d_{wall})$

In the eqtn below Mu shall not be less than $Vu \cdot d_v$

$$\xi_{s_wall} := \frac{\frac{|Mu|}{d_{wall}} + 0.5Nu_{wall} + |Vu_{wall}|}{E_s \cdot As_{wall}} \cdot b_w \qquad 1000 \cdot \xi_{s_wall} = 1.66 \qquad (5.8.3.4.2\text{-}4)$$

$s_{x_wall} := d_{wall}$

$$s_{xe_wall} := s_{x_wall} \cdot \frac{1.38in}{Aggregate_{diam} + 0.63in} = 8.125 \cdot in \qquad (5.8.3.4.2\text{-}5)$$

$$\beta_{wall} := \left(\frac{4.8}{1 + 750 \cdot \xi_{s_wall}}\right) \cdot \left(\frac{51}{39 + \frac{s_{xe_wall}}{1in}}\right) = 2.314 \qquad (5.8.3.4.2\text{-}2)$$

$$\Theta_{wall} := 29deg + 3500deg \cdot \xi_{s_wall} = 34.811 \cdot deg \qquad (5.8.3.4.2\text{-}3)$$

$$Vn_{wall} := \min\left(0.25 \cdot f_c \cdot b_w \cdot d_{wall}, 0.0316 \cdot \beta_{wall} \cdot \sqrt{f_c \cdot ksi} \cdot b_w \cdot d_{wall}\right) = 15.939 \cdot kip \qquad (5.8.3.3)$$

$Vr_{wall} := \phi_{shear} \cdot Vn_{wall} = 14.346 \cdot kip$

$Vu_{wall} \cdot b_w = 3.126 \cdot kip$

$$Check_{WallShear} := \begin{cases} \text{"OK"} & \text{if } \frac{Vr_{wall}}{Vu_{wall} \cdot b_w} \geq 1 \\ \text{"NG"} & \text{otherwise} \end{cases} = \text{"OK"}$$

Check Crack Control in Section 5.7.3.4

Stress in reinforcement calculated per MacGregor "Reinforced Concrete Mechanics and Design" 4th Ed

$$Ms_{wall} := \eta_i \cdot \left(1.0 \cdot EH_{wall} \cdot y_{EH.wall} + 1.0LS_{wall} \cdot y_{LS.wall}\right) = 8.447 \cdot \frac{kip \cdot ft}{ft}$$

$$Ns_{wall} := -\eta_i \cdot \left(1.0 \cdot \gamma_c \cdot t_{wall} \cdot h_{wall.internal}\right) = -1.261 \cdot \frac{kip}{ft}$$

$$\eta := \frac{E_s}{E_c} = 7.118$$

$$\rho_{wall} := \frac{As_{wall}}{b_w \cdot d_{wall}} = 0.005$$

$$k := \sqrt{2\rho_{wall} + \left(\rho_{wall} \cdot \eta\right)^2} - \rho_{wall} \cdot \eta$$

$$j_{wall} := 1 - \frac{k}{3} = 0.977$$

$$fss_{wall} := \frac{Ms_{wall} + Ns_{wall} \cdot \left(d_{wall} - \frac{t_{wall}}{2}\right)}{As_{wall} \cdot j_{wall} \cdot d_{wall}} = 27.773 \cdot \frac{ksi}{ft}$$

Stress in Reinforcement at Service Limit State

$$d_{c_wall} := t_{wall} - d_{wall} = 1.875 \cdot in$$

$$\beta_s := 1 + \frac{d_{c_wall}}{0.7 \cdot \left(t_{wall} - d_{c_wall}\right)} = 1.33$$

$$\gamma_e := 1.00$$

exposure factor

$$s_{max} := \frac{700 \frac{kip}{in} \cdot \gamma_e}{\beta_s \cdot fss_{wall} \cdot b_w} - 2 \cdot d_{c_wall} = 15.205 \cdot in$$

$$Check_{MaxSpacing} := \begin{cases} \text{"OK"} & \text{if } s_{wall} \le s_{max} \\ \text{"NG"} & \text{otherwise} \end{cases} = \text{"OK"}$$

Check Minimum Bar Spacing in Section 5.10.3.1.2:

$$s_{min} := \max\left(diam_{wall}, 1.33 Aggregate_{diam}, 1in\right) = 1 \cdot in$$

$$Check_{MinSpacing} := \begin{cases} \text{"OK"} & \text{if } s_{wall} \ge s_{min} \\ \text{"NG"} & \text{otherwise} \end{cases} = \text{"OK"}$$

Check Maximum Bar Spacing in Section 5.10.3.2:

$$s_{max} := \min\left(1.5 \cdot t_{wall}, 18in\right) = 15 \cdot in$$

$$Check_{MaxSpacing} := \begin{cases} \text{"OK"} & \text{if } s_{wall} \le s_{max} \\ \text{"NG"} & \text{otherwise} \end{cases} = \text{"OK"}$$

Check Anchor Attachment to Wall

Check Moment Capacity of Connection Bars

Conservatively assume the entire wall is cantilevered about the footing, therefore consider only driving moments. Use total loads instead of loads per foot. Use 100% of soil weight. Must determine controlling anchor, since tributary width is variable, not necessarily the anchor at the tallest wall. Assume only top four connection bars resist tension. This assumption is consistent with HITEC p.D28.

$Mu_{anchor} := \max(Driving_{brg.1} \cdot trib_1, Driving_{brg.2} \cdot trib_2) = 93.162 \cdot kip \cdot ft$

$bar_{anchor} := 5$ size of bar

$diam_{anchor} := \frac{bar_{anchor}}{8} in = 0.625 \cdot in$

$As_{anchor} := \frac{\pi}{4} \cdot diam_{anchor}^2 = 0.307 \cdot in^2$

$n := 6$ Number of bars in tension

$b_{anchor} := t_{stem} = 6 \cdot in$ thickness of anchor stem

$h_{stem} := 3ft + 6in$ height of anchor stem

$d_{anchor} := 30.5in$ distance from centroid of tension reinforcement extreme compression fiber.

Verify that f_y can be substituted for f_s in the equations of 5.7.3.2. This is allowed when $\frac{c}{d_s} \le 0.60$.

$c_{anchor} := \frac{n \cdot As_{anchor} \cdot f_y}{0.85 \cdot f_c \cdot \beta_1 \cdot b_{anchor}} = 5.414 \cdot in$ Simplified equation 5.7.3.1.2-4

$\frac{c_{anchor}}{d_{anchor}} = 0.178$ **This is less than 0.60 therefore f_y can be substituted for f_s**

$a_{anchor} := \beta_1 \cdot c_{anchor} = 4.331 \cdot in$

$Mn_{anchor} := n \cdot As_{anchor} \cdot f_y \cdot \left(d_{anchor} - \frac{a_{anchor}}{2}\right)$

$Mr_{anchor} := \phi_{moment} \cdot Mn_{anchor} = 234.708 \cdot kip \cdot ft$

$Mu_{anchor} = 93.162 \cdot kip \cdot ft$

$$Check_{AnchorFlexure} := \begin{cases} \text{"OK"} & \text{if } \frac{Mr_{anchor}}{Mu_{anchor}} \ge 1 \\ \text{"NG"} & \text{otherwise} \end{cases} = \text{"OK"}$$

Check Minimum Flexural Reinforcement (5.7.3.3.2)

$f_r = 0.537 \cdot ksi$ AASHTO 5.4.2.6

$I_{g.anchor} := \frac{1}{12} \cdot t_{stem} \cdot h_{stem}^3 = 3.704 \times 10^4 \cdot in^4$

$y_{t.anchor} := \frac{h_{stem}}{2} = 1.75\,ft$ Distance from centroid to extreme tension fibers. Conservatively ignore reinforcement.

$S_{c.anchor} := \frac{I_{g.anchor}}{y_{t.anchor}} = 1.764 \times 10^3 \cdot in^3$

$\gamma_3 := 0.67$ 0.67 = Factor for Grade 60 ASTM A615 rebar

$\gamma_1 := 1.2$ 1.2 = Factor for precast segmental structures

$M_{cr.anchor} := \gamma_3 \cdot \gamma_1 \cdot S_{c.anchor} \cdot f_r = 63.426 \cdot kip \cdot ft$ Simplified AASHTO Eq 5.7.3.3.2-1

$1.33Mu_{anchor} \cdot b_w = 123.905\,ft \cdot kip \cdot ft$

$$Check_{MinSteelAnchor} := \begin{cases} \text{"OK"} & \text{if } Mr_{anchor} \geq \min(1.33Mu_{anchor}, M_{cr.anchor}) \\ \text{"NG"} & \text{otherwise} \end{cases} = \text{"OK"}$$

Check Minimum Steel for Temperature and Shrinkage (11.6.1.5.1 & 5.10.8)

$$As_{min.anchor} := \max\left[0.11\frac{in^2}{ft}, \min\left[0.60\frac{in^2}{ft}, \frac{1.30 \cdot b_{anchor} \cdot h_{stem}}{2 \cdot (b_{anchor} + h_{stem}) \cdot \frac{f_y}{ksi}}\right]\right] = 0.6 \cdot \frac{in^2}{ft}$$

$As_{min.anchor} \cdot h_{stem} = 2.1 \cdot in^2$

$As_{anchor} \cdot (n + 2) = 2.454 \cdot in^2$ Account for extra two bars in compression face

Check Hook Development of Connection Steel in Wall

Per 5.10.2, A standard hook with a 180 degree bend shall have a 4*db extension, but not less than 2.5 inches. Per 5.12.3, Cover beyond free end of bar shall be 2 inches.

$$l_{hb} := \frac{38.0 diam_{anchor}}{\sqrt{\left(\frac{f_c}{ksi}\right)}} = 10.621 \cdot in$$

Basic development length for a Grade 60 bar with a standard hook (AASHTO 5.11.2.4.1)

Modification Factors to be applied to the Basic Development Length (AASHTO 5.11.2.4.2)

$M_{strength} := 1$ — Increase by fy/60 for yield strength greater than 60ksi

$M_{cover} := 0.7$ — 0.7 if side cover normal to plane of hook is at least 2.5 inches AND Cover beyond hook is at least 2.0in

$M_{stirrups} := 1.0$ — 0.8 if hook is enclose in with ties or stirrups as specified in 5.11.2.4.2

$M_{As} := 1.0$ — Conservatively assume entire area of steel provided is required.

$M_{lightweight} := 1.0$ — 1.3 if lightweight concrete is used.

$M_{epoxy} := 1.0$ — 1.2 if epoxy rebar is used.

$$M := M_{strength} \cdot M_{cover} \cdot M_{stirrups} \cdot M_{As} \cdot M_{lightweight} \cdot M_{epoxy} = 0.7$$

$$l_{dh} := \max(6in, 8 \cdot diam_{anchor}, M \cdot l_{hb}) = 7.435 \cdot in$$

$$t_{wall.min} := cover_{wall} + l_{dh} = 8.935 \cdot in$$

$$Check_{Wall.Thickness} := \begin{cases} \text{"OK"} & \text{if } t_{wall} \geq t_{wall.min} \\ \text{"NG"} & \text{otherwise} \end{cases} = \text{"OK"}$$

Geometry

ELEV Top Wing @ Anchor #1	1005.24	ft	
ELEV Top Ped	993.67	ft	*ignores keyway*
ELEV Btm Footing	989.67	ft	
Footing Thickness	1.50	ft	
Pedestal Height	2.50	ft	
Wing Panel Height	11.57	ft	
Foundation Height	4.00	ft	
Depth over wing @ back of anchor	3.68	ft	
BO Footing to FG	19.25		
LS Equiv Soil Ht per AASHTO 3.11.6.4	0.00	ft	
Wing Panel Width	0.83	ft	
Pedestal Width	2.00	ft	
Toe Width	2.50	ft	
Heel Width	3.50	ft	
Footing Width	8.00	ft	
Design Section Width, bw	1.00	ft	
Section Weight	2,550	plf	

Note: For strip footings, Ped Height = 0 and Ped Width = Wing Panel Width

Material Properties

Soils			
Backfill Soil Unit Weight	0.140	kcf	
Backfill Soil Friction Angle, ϕf	34.00	deg	
Lateral Earth Pressure Coef, K	0.307		
Foundation-Footing Friction Coefficient	0.54		=0.8tan(34)
Factored Bearing Resistance	10.26	ksf	per contract plans sht 6, beff = 4.32
Concrete			
Concrete Unit Weight	0.150	kcf	
f'c	4.00	ksi	
Aggregate Diam	0.75	in	
Ec	3,644	ksi	AASHTO 5.4.2.4
$\beta 1$	0.85		AASHTO 5.7.2.2
Steel			
fy	60	ksi	
Es	29,000	ksi	
n (eta)	7.958		

beff	4	12	4.32
qR	10	16.5	10.26

Unfactored Wing Reactions

	Case	Force (k)	
Vertical	DC	1.96	WW1 Anchor 1, p8
	DW	0	
	EV	14.397	WW1 Anchor 1, p8
	EH	1.366	WW1 Anchor 1, p9
	LS	0	
	LL	0	
Horizontal	DC	0	
	DW	0	
	EV	0	
	EH	-4.202	WW1 Anchor 1, p9
	LS	0	
	LL	0	

Note: Positive forces are down and toward backfill

Load Factors

Case	Max	Min	Serv
DC	1.25	0.9	1
DW	1.5	0.65	1
EV	1.35	1	1
EH	1.5	0.9	1
LS	1.75	0	1
LL	1.75	0	1

Resistance Factors

Shear	0.9
Sliding	0.9
Bearing	0.45

Assumptions

-Case 1: Maximum Lateral Backfill Load Factor

Check Max and Min Vertical loads

Check With and Without Live Load

-Case 2: Minimum Lateral Backfill Load Factor

Check Max and Min Vertical loads

Check With and Without Live Load

-Allow passive backfill resistance? Yes 1

Case 1: Maximum Lateral Backfill Loads

Note: Positive Forces Are Down and Toward Backfill

Load Description	Dir	Case	Force (k)	Arm (ft)	Max Vert w/LL Factor	Max Vert w/LL F (k)	Max Vert w/LL M (k-ft)	Max Vert No LL Factor	Max Vert No LL F (k)	Max Vert No LL M (k-ft)	Min Vert w/LL Factor	Min Vert w/LL F (k)	Min Vert w/LL M (k-ft)	Min Vert No LL Factor	Min Vert No LL F (k)	Min Vert No LL M (k-ft)	Service Factor	Service F (k)	Service M (k-ft)
From Structure	V	DC	1.96	3.50	1.25	2.45	8.58	1.25	2.45	8.58	0.9	1.76	6.17	0.9	1.76	6.17	1	1.96	6.86
		DW	0.00	3.50	1.5	0.00	0.00	1.5	0.00	0.00	0.65	0.00	0.00	0.65	0.00	0.00	1	0.00	0.00
		EV	14.40	3.50	1.35	19.44	68.03	1.35	19.44	68.03	1	14.40	50.39	1	14.40	50.39	1	14.40	50.39
		EH	1.37	3.50	1.5	2.05	7.17	1.5	2.05	7.17	1.5	2.05	7.17	1.5	2.05	7.17	1	1.37	4.78
		LS	0.00	3.50	1.75	0.00	0.00	1.75	0.00	0.00	1.75	0.00	0.00	1.75	0.00	0.00	1	0.00	0.00
		LL	0.00	3.50	1.75	0.00	0.00	0	0.00	0.00	1.75	0.00	0.00	0	0.00	0.00	1	0.00	0.00
	H	DC	0.00	4.00	1.25	0.00	0.00	1.25	0.00	0.00	0.9	0.00	0.00	0.9	0.00	0.00	1	0.00	0.00
		DW	0.00	4.00	1.5	0.00	0.00	1.5	0.00	0.00	0.65	0.00	0.00	0.65	0.00	0.00	1	0.00	0.00
		EV	0.00	4.00	1.35	0.00	0.00	1.35	0.00	0.00	1	0.00	0.00	1	0.00	0.00	1	0.00	0.00
		EH	-4.20	4.00	1.5	-6.30	-25.21	1.5	-6.30	-25.21	1.5	-6.30	-25.21	1.5	-6.30	-25.21	1	-4.20	-16.81
		LS	0.00	4.00	1.75	0.00	0.00	1.75	0.00	0.00	1.75	0.00	0.00	1.75	0.00	0.00	1	0.00	0.00
		LL	0.00	4.00	1.75	0.00	0.00	0	0.00	0.00	1.75	0.00	0.00	0	0.00	0.00	1	0.00	0.00
EV heel	V	EV	1.23	6.25	1.35	1.65	10.34	1.35	1.65	10.34	1	1.23	7.66	1	1.23	7.66	1	1.23	7.66
EV ped	V	EV	0.00	4.21	1.35	0.00	0.00	1.35	0.00	0.00	1	0.00	0.00	1	0.00	0.00	1	0.00	0.00
DC foot	V	DC	1.80	4.00	1.25	2.25	9.00	1.25	2.25	9.00	0.9	1.62	6.48	0.9	1.62	6.48	1	1.80	7.20
DC pedestal	V	DC	0.75	3.50	1.25	0.94	3.28	1.25	0.94	3.28	0.9	0.68	2.36	0.9	0.68	2.36	1	0.75	2.63
LS footing	H	LS	0.00	2.00	1.75	0.00	0.00	1.75	0.00	0.00	1.75	0.00	0.00	1.75	0.00	0.00	1	0.00	0.00
EH ftg	H	EH	-0.34	1.33	1.5	-0.52	-0.69	1.5	-0.52	-0.69	1.5	-0.52	-0.69	1.5	-0.52	-0.69	1	-0.34	-0.46
EH overburden	H	EH	-2.62	2.00	1.5	-3.94	-7.87	1.5	-3.94	-7.87	1.5	-3.94	-7.87	1.5	-3.94	-7.87	1	-2.62	-5.25

Results

Driving Moments *(active behind)*			-33.77				-33.77				-33.77				-33.77				-22.52
Driving Moments *(passive behind)*			-119.4				-119.4				-119.4				-119.4				-79.59
Resisting Moments			106.39				106.39				80.23				80.23				79.51
Total Vertical		28.78	k			28.78	k			21.73	k			21.73	k			21.50	k
Location of Resultant *(active behind)*		2.52	ft			2.52	ft			2.14	ft			2.14	ft			2.65	ft
Location of Resultant *(passive Behind)*		-0.45	k-ft			-0.45	k-ft			-1.80	k-ft			-1.80	k-ft			0.00	k-ft
Eccentricity,e (negative is toward heel)		1.48	ft			1.48	ft			1.86	ft			1.86	ft			1.35	ft
Check Allowable Eccentricity = b/4 =	**ok**	2.00	ft	**ok**		2.00	ft	**ok**		2.00	ft	**ok**		2.00	ft	**ok**		2.00	ft
Total Horizontal Load (positive is toward heel)		-10.76	k			-10.76	k			-10.76	k			-10.76	k			-7.17	k
Available Passive resistance		-44.53	ft			-44.53	ft			-44.53	ft			-44.53	ft			-29.68	ft
Check Sliding Resistance $= \phi * \tan(\delta) * \Sigma V$	**ok**	13.98	k	**ok**		13.98	k	**NG**		10.55	k	**NG**		10.55	k	**ok**		10.44	k
Effective Footing Width, beff		5.05	ft			5.05	ft			4.28	ft			4.28	ft			5.30	ft
Factored Bearing Resistance		10.26	ksf			10.26	ksf			10.26	ksf			10.26	ksf			10.26	ksf
Check Bearing Pressure $= \Sigma V / beff$	**ok**	5.70	ksf	**ok**		5.70	ksf	**ok**		5.08	ksf	**ok**		5.08	ksf	**ok**		4.05	ksf

Case 2: Minimum Lateral Backfill Loads

Note: Positive Forces Are Down and Toward Backfill

Load Description	Dir	Case	Force (k)	Arm (ft)	Max Vert w/LL Factor	Max Vert w/LL F (k)	Max Vert w/LL M (k-ft)	Max Vert No LL Factor	Max Vert No LL F (k)	Max Vert No LL M (k-ft)	Min Vert w/LL Factor	Min Vert w/LL F (k)	Min Vert w/LL M (k-ft)	Min Vert No LL Factor	Min Vert No LL F (k)	Min Vert No LL M (k-ft)	Service Factor	Service F (k)	Service M (k-ft)
From Structure	V	DC	1.96	3.50	1.25	2.45	8.58	1.25	2.45	8.58	0.9	1.76	6.17	0.9	1.76	6.17	1	1.96	6.86
		DW	0.00	3.50	1.5	0.00	0.00	1.5	0.00	0.00	0.65	0.00	0.00	0.65	0.00	0.00	1	0.00	0.00
		EV	14.40	3.50	1.35	19.44	68.03	1.35	19.44	68.03	1	14.40	50.39	1	14.40	50.39	1	14.40	50.39
		EH	1.37	3.50	0.9	1.23	4.30	0.9	1.23	4.30	0.9	1.23	4.30	0.9	1.23	4.30	1	1.37	4.78
		LS	0.00	3.50	0	0.00	0.00	0	0.00	0.00	0	0.00	0.00	0	0.00	0.00	1	0.00	0.00
		LL	0.00	3.50	1.75	0.00	0.00	0	0.00	0.00	1.75	0.00	0.00	0	0.00	0.00	1	0.00	0.00
	H	DC	0.00	4.00	1.25	0.00	0.00	1.25	0.00	0.00	0.9	0.00	0.00	0.9	0.00	0.00	1	0.00	0.00
		DW	0.00	4.00	1.5	0.00	0.00	1.5	0.00	0.00	0.65	0.00	0.00	0.65	0.00	0.00	1	0.00	0.00
		EV	0.00	4.00	1.35	0.00	0.00	1.35	0.00	0.00	1	0.00	0.00	1	0.00	0.00	1	0.00	0.00
		EH	-4.20	4.00	0.9	-3.78	-15.13	0.9	-3.78	-15.13	0.9	-3.78	-15.13	0.9	-3.78	-15.13	1	-4.20	-16.81
		LS	0.00	4.00	0	0.00	0.00	0	0.00	0.00	0	0.00	0.00	0	0.00	0.00	1	0.00	0.00
		LL	0.00	4.00	1.75	0.00	0.00	0	0.00	0.00	1.75	0.00	0.00	0	0.00	0.00	1	0.00	0.00
EV heel	V	EV	1.23	6.25	1.35	1.65	10.34	1.35	1.65	10.34	1	1.23	7.66	1	1.23	7.66	1	1.23	7.66
EV ped	V	EV	0.00	4.21	1.35	0.00	0.00	1.35	0.00	0.00	1	0.00	0.00	1	0.00	0.00	2	0.00	0.00
DC foot	V	DC	1.80	4.00	1.25	2.25	9.00	1.25	2.25	9.00	0.9	1.62	6.48	0.9	1.62	6.48	1	1.80	7.20
DC pedestal	V	DC	0.75	3.50	1.25	0.94	3.28	1.25	0.94	3.28	0.9	0.68	2.36	0.9	0.68	2.36	1	0.75	2.63
LS footing	H	LS	0.00	2.00	0	0.00	0.00	0	0.00	0.00	0	0.00	0.00	0	0.00	0.00	1	0.00	0.00
EH ftg	H	EH	-0.34	1.33	0.9	-0.31	-0.41	0.9	-0.31	-0.41	0.9	-0.31	-0.41	0.9	-0.31	-0.41	1	-0.34	-0.46
EH overburden	H	EH	-2.62	2.00	0.9	-2.36	-4.72	0.9	-2.36	-4.72	0.9	-2.36	-4.72	0.9	-2.36	-4.72	1	-2.62	-5.25

Results

Driving Moments (active behind)			-20.26				-20.26				-20.26				-20.26				-22.52
Driving Moments (passive behind)			-71.63				-71.63				-71.63				-71.63				-79.59
Resisting Moments			103.52				103.52				77.37				77.37				79.51
Total Vertical		27.96	k			27.96	k			20.91	k			20.91	k			21.50	k
Location of Resultant (active behind)		2.98	ft			2.98	ft			2.73	ft			2.73	ft			2.65	ft
Location of Resultant (passive Behind)		1.14	k-ft			1.14	k-ft			0.27	k-ft			0.27	k-ft			0.00	k-ft
Eccentricity,e (negative is toward heel)		1.02	ft			1.02	ft			1.27	ft			1.27	ft			1.35	ft
Check Allowable Eccentricity = b/4 =	**ok**	2.00	ft	**ok**		2.00	ft	**ok**		2.00	ft	**ok**		2.00	ft	**ok**		2.00	ft
Total Horizontal Load (positive is toward heel)		-6.45	k			-6.45	k			-6.45	k			-6.45	k			-7.17	k
Available Passive resistance		-26.72	ft			-26.72	ft			-26.72	ft			-26.72	ft			-29.68	ft
Check Sliding Resistance $= \phi * \tan(\delta) * \Sigma V$	**ok**	13.58	k	**ok**		13.58	k	**ok**		10.16	k	**ok**		10.16	k	**ok**		10.44	k
Effective Footing Width, beff		5.96	ft			5.96	ft			5.46	ft			5.46	ft			5.30	ft
Factored Bearing Resistance		10.26	ksf			10.26	ksf			10.26	ksf			10.26	ksf			10.26	ksf
Check Bearing Pressure $= \Sigma V / beff$	**ok**	4.69	ksf	**ok**		4.69	ksf	**ok**		3.83	ksf	**ok**		3.83	ksf	**ok**		4.05	ksf

Pedestal Design Forces: Case 1 Maximum Lateral Backfill Loads

Note: Positive Forces Are Toward Backfill

Load Description	Dir	Case	Force (k)	Arm (ft)	Max Vert w/LL Factor	Max Vert w/LL F (k)	Max Vert w/LL M (k-ft)	Max Vert No LL Factor	Max Vert No LL F (k)	Max Vert No LL M (k-ft)	Min Vert w/LL Factor	Min Vert w/LL F (k)	Min Vert w/LL M (k-ft)	Min Vert No LL Factor	Min Vert No LL F (k)	Min Vert No LL M (k-ft)	Service Factor	Service F (k)	Service M (k-ft)
From Structure	H	DC	0.00	2.50	1.25	0.00	0.00	1.25	0.00	0.00	0.9	0.00	0.00	0.9	0.00	0.00	1	0.00	0.00
		DW	0.00	2.50	1.5	0.00	0.00	1.5	0.00	0.00	0.65	0.00	0.00	0.65	0.00	0.00	1	0.00	0.00
		EV	0.00	2.50	1.35	0.00	0.00	1.35	0.00	0.00	1	0.00	0.00	1	0.00	0.00	1	0.00	0.00
		EH	-4.20	2.50	1.5	-6.30	-15.76	1.5	-6.30	-15.76	1.5	-6.30	-15.76	1.5	-6.30	-15.76	1	-4.20	-10.51
		LS	0.00	2.50	1.75	0.00	0.00	1.75	0.00	0.00	1.75	0.00	0.00	1.75	0.00	0.00	1	0.00	0.00
		LL	0.00	2.50	1.75	0.00	0.00	0	0.00	0.00	1.75	0.00	0.00	0	0.00	0.00	0	0.00	0.00
LS footing	H	LS	0.00	1.25	1.75	0.00	0.00	1.75	0.00	0.00	1.75	0.00	0.00	1.75	0.00	0.00	1	0.00	0.00
EH ftg	H	EH	-0.13	0.83	1.5	-0.20	-0.17	1.5	-0.20	-0.17	1.5	-0.20	-0.17	1.5	-0.20	-0.17	1	-0.13	-0.11
EH overburden	H	EH	-1.64	1.25	1.5	-2.46	-3.08	1.5	-2.46	-3.08	1.5	-2.46	-3.08	1.5	-2.46	-3.08	1	-1.64	-2.05
				Totals		-8.96	-19.00		-8.96	-19.00		-8.96	-19.00		-8.96	-19.00		-5.98	-12.67

Ped Results: Case 1	Max	Min
Mu	-19.00	-19.00
Vu	-8.96	-8.96
Ms	-12.67	

Notes:

Positive Values indicates tension on toe face. Use for Toe Face design

Negative Values indicates tension on heel face. Use for Heel Face design

Footing Design Forces: Case 1 Maximum Lateral Backfill Loads

Note: Positive Forces Are Down

	Max Vert w/LL Factor	Max Vert w/LL Load	Max Vert No LL Factor	Max Vert No LL Load	Min Vert w/LL Factor	Min Vert w/LL Load	Min Vert No LL Factor	Min Vert No LL Load	Service Factor	Service Load
Total Vertical Load		28.78 k		28.78 k		21.73 k		21.73 k		21.50 k
Eccentricity, e (negative is toward heel)		1.48 ft		1.48 ft		1.86 ft		1.86 ft		1.35 ft
Note: Bearing Pressure for Structural Design to be trapezoidal per 10.6.5:		*B/6 = 1.333*								
Bearing Pressure @ Heel (AASHTO 11.6.3.2)		0 ksf		0 ksf		0 ksf		0 ksf		0 ksf
Bearing Pressure @ Toe (AASHTO 11.6.3.2)		-7.602 ksf		-7.602 ksf		-6.775 ksf		-6.775 ksf		-5.406 ksf
Bearing Pressure @ Toe Face of Pedestal		-5.227 ksf		-5.227 ksf		-4.658 ksf		-4.658 ksf		-3.716 ksf
Bearing Pressure @ Heel face of Pedestal		-3.326 ksf		-3.326 ksf		-2.964 ksf		-2.964 ksf		-2.365 ksf
DC Toe	1.25	0.7031 k	1.25	0.7031 k	0.90	0.5063 k	0.90	0.5063 k	1	0.5625 k
Upward Moment @ Toe face of Pedestal		-27.83 k-ft		-27.83 k-ft		-24.95 k-ft		-24.95 k-ft		-19.71 k-ft
Upward Shear @ Toe face of Pedestal		-15.33 k		-15.33 k		-13.79 k		-13.79 k		-10.84 k
DC Heel	1.25	0.9844 k	1.25	0.9844 k	0.90	0.7088 k	0.90	0.7088 k	1	0.7875 k
EV Heel	1.35	8.70 k	1.35	8.70 k	1.00	8.70 k	1.00	8.70 k	1	8.70 k
Net Moment @ Heel face of Pedestal		10.152 k-ft		10.152 k-ft		10.408 k-ft		10.408 k-ft		11.769 k-ft
Net Shear @ Heel face of Pedestal		3.8609 k		3.8609 k		4.2183 k		4.2183 k		5.3457 k

Downward Only Moment @ Heel face of Pedestal (per 11.6.1.2)		16.942	k-ft		16.942	k-ft		16.46	k-ft		16.46	k-ft		16.598	k-ft
Downward Only Shear @ Heel face of Pedestal (per 11.6.1.2)		9.68	k		9.68	k		9.41	k		9.41	k		9.48	k

Ftg Heel Face Results: Case 1	Max	Min
Mu	16.94	10.152
Vu	9.68	3.8609
Ms	16.60	11.769

Ftg Toe Face Results: Case 1	Min
Mu	-27.83
Vu	-15.33
Ms	-19.71

Note: Positive Values indicate tension on top of footing

Pedestal Design Forces: Case 2 Minimum Lateral Backfill Loads

Note: Positive Forces Are Toward Backfill

Load Description	Dir	Case	Force (k)	Arm (ft)	Max Vert w/LL Factor	F (k)	M (k-ft)	Max Vert No LL Factor	F (k)	M (k-ft)	Min Vert w/LL Factor	F (k)	M (k-ft)	Min Vert No LL Factor	F (k)	M (k-ft)	Service Factor	F (k)	M (k-ft)
From Structure	H	DC	0.00	2.50	1.25	0.00	0.00	1.25	0.00	0.00	0.9	0.00	0.00	0.9	0.00	0.00	1	0.00	0.00
		DW	0.00	2.50	1.5	0.00	0.00	1.5	0.00	0.00	0.65	0.00	0.00	0.65	0.00	0.00	1	0.00	0.00
		EV	0.00	2.50	1.35	0.00	0.00	1.35	0.00	0.00	1	0.00	0.00	1	0.00	0.00	1	0.00	0.00
		EH	-4.20	2.50	0.9	-3.78	-9.45	0.9	-3.78	-9.45	0.9	-3.78	-9.45	0.9	-3.78	-9.45	0.5	-2.10	-5.25
		LS	0.00	2.50	0	0.00	0.00	0	0.00	0.00	0	0.00	0.00	0	0.00	0.00	0	0.00	0.00
		LL	0.00	2.50	1.75	0.00	0.00	0	0.00	0.00	1.75	0.00	0.00	0	0.00	0.00	1	0.00	0.00
LS footing	H	LS	0.00	1.25	0	0.00	0.00	0	0.00	0.00	0	0.00	0.00	0	0.00	0.00	0.5	0.00	0.00
EH ftg	H	EH	-0.13	0.83	0.9	-0.12	-0.10	0.9	-0.12	-0.10	0.9	-0.12	-0.10	0.9	-0.12	-0.10	0.5	-0.07	-0.06
EH overburden	H	EH	-1.64	1.25	0.9	-1.48	-1.85	0.9	-1.48	-1.85	0.9	-1.48	-1.85	0.9	-1.48	-1.85	0.5	-0.82	-1.03
			Totals			-5.38	-11.40		-5.38	-11.40		-5.38	-11.40		-5.38	-11.40		-2.99	-6.33

Ped Results: Case 2	Max	Min
Mu	-11.40	-11.40
Vu	-5.38	-5.38
Ms	-6.33	

Notes:
Positive Values indicates tension on toe face. Use for Toe Face design
Negative Values indicates tension on heel face. Use for Heel Face design

Footing Design Forces: Case 2 Minimum Lateral Backfill Loads

Note: Positive Forces Are Down

	Max Vert w/LL Factor	Load	Max Vert No LL Factor	Load	Min Vert w/LL Factor	Load	Min Vert No LL Factor	Load	Service Factor	Load
Total Vertical Load		27.96 k		27.96 k		20.91 k		20.91 k		21.50 k
Eccentricity, e (negative is toward heel)		1.02 ft		1.02 ft		1.27 ft		1.27 ft		1.35 ft
Note: Bearing Pressure for Structural Design to be trapezoidal per 10.6.5:		*B/6 = 1.333*								
Bearing Pressure @ Heel (AASHTO 11.6.3.2)		-0.816 ksf		-0.816 ksf		-0.126 ksf		-0.126 ksf		0 ksf
Bearing Pressure @ Toe (AASHTO 11.6.3.2)		-6.173 ksf		-6.173 ksf		-5.102 ksf		-5.102 ksf		-5.406 ksf
Bearing Pressure @ Toe Face of Pedestal		-4.499 ksf		-4.499 ksf		-3.547 ksf		-3.547 ksf		-3.716 ksf
Bearing Pressure @ Heel face of Pedestal		-3.16 ksf		-3.16 ksf		-2.303 ksf		-2.303 ksf		-2.365 ksf
DC Toe	1.25	0.7031 k	1.25	0.7031 k	0.90	0.5063 k	0.90	0.5063 k	1	0.5625 k
Upward Moment @ Toe face of Pedestal		-21.9 k-ft		-21.9 k-ft		-18.55 k-ft		-18.55 k-ft		-19.71 k-ft
Upward Shear @ Toe face of Pedestal		-12.64 k		-12.64 k		-10.3 k		-10.3 k		-10.84 k
DC Heel	1.25	0.9844 k	1.25	0.9844 k	0.90	0.7088 k	0.90	0.7088 k	1	0.7875 k
EV Heel	1.35	8.70 k	1.35	8.70 k	1.00	8.70 k	1.00	8.70 k	1	8.70 k
Net Moment @ Heel face of Pedestal		7.1583 k-ft		7.1583 k-ft		11.245 k-ft		11.245 k-ft		11.769 k-ft
Net Shear @ Heel face of Pedestal		2.7234 k		2.7234 k		5.156 k		5.156 k		5.3457 k

Downward Only Moment @ Heel face of Pedestal (per 11.6.1.2)		16.94 k-ft		16.94 k-ft		16.46 k-ft		16.46 k-ft		16.60 k-ft
Downward Only Shear @ Heel face of Pedestal (per 11.6.1.2)		9.68 k		9.68 k		9.41 k		9.41 k		9.48 k

Ftg Heel Face Results: Case 2	Max	Min
Mu	16.94	7.1583
Vu	9.68	2.7234
Ms	16.60	11.769

Ftg Toe Face Results: Case 2	Min
Mu	-21.90
Vu	-12.64
Ms	-19.71

Note: Positive Values indicate tension on top of footing

Pedestal Structural Design Results

Pedestal Results	Max	Min
Mu	-11.40	-19.00
Vu	-5.38	-8.96
Ms	-6.33	-12.67

Notes:
Positive Values indicates tension on toe face. Use for Toe Face design
Negative Values indicates tension on heel face. Use for Heel Face design

Pedestal Heel Face Rebar Layout

Bar # 6 | Space 9 in | Diam 0.75 in | As 0.589 in^2 | Cover 2 in

Check Moment Resistance

d = $t_{ped} - cover - \frac{diam}{2} =$	21.625 in	
c $= \frac{A_s F_y}{0.85 f'_c \beta_1 b_w} =$	1.01912 in	
Per AASHTO 5.7.3.2, fy may be substituted for fs when c/d <0.60:		
c/d =	0.04713	**ok**
a = β1*c =	0.86625 in	
$\phi_{moment} = 0.75 \le 0.65 + 0.15(\frac{d}{c} - 1) \le 0.9$	0.9	per 5.5.4.2.1
Mr $= \phi_{moment} A_s f_y \left(d - \frac{a}{2}\right) =$	56.1737 kip-ft	
Mu	-19.00 kip-ft	**ok**

Check Minimum Flexural Reinforcing (5.7.3.3.2)

fr $= 0.24\sqrt{f'_c} =$	0.48 ksi	
I_g $= \frac{1}{12} b_w t_{ped}^3 =$	13824 in^4	
y_t $= \frac{1}{2} t_{ped} =$	12 in	

$\gamma_3 =$ 0.67 $\gamma_1 =$ 1.2

Check Crack Control (5.7.3.4)

$\rho = \frac{A_s}{b_w d} =$	0.0023	
k $= \sqrt{2\rho\eta + (\rho\eta)^2} - \rho\eta =$	0.1729	
j $= 1 - \frac{k}{3} =$	0.9424	
Ms	-12.67	
$fss = \frac{M_s}{A_s j d} =$	12.663 ksi	
d_c $= t - d =$	2.375 in	
βs $= 1 + \frac{d_c}{0.7(t - d_c)} =$	1.1569	
γ_e =	0.75	
s_max $= \frac{700\gamma_e}{\beta_s f_{ss} b_w} - 2d_c =$	31.1 in	**ok**

Check Shear Resistance (5.8.3.3)

d_v $= \max(0.72t, 0.9d)$	19.463 in
β	2
Vr $= \phi_{shear} 0.0316 \beta \sqrt{f'_c} b_w d_v =$	26.569 k

Mcr $= \gamma_3 \gamma_1 f_r \frac{I_g}{y_t} =$	37.0483 k-ft	
1.33Mu =	25.271 k-ft	
Check Mr > min(1.33Mu,Mcr)	56.1737 k-ft	**ok**

Pedestal Toe Face Rebar Layout

Bar	# 5	Space	9 in	Diam	0.63 in	As	0.4091 in^2	Cover	2 in

Check Moment Resistance

d = $t_{ped} - cover - \frac{diam}{2} =$	21.6875 in	
c $= \frac{A_s F_y}{0.85 f'_c \beta_1 b_w} =$	0.70772 in	

Per AASHTO 5.7.3.2, fy may be substituted for fs when c/d <0.60:

c/d =	0.03263	**ok**
a = β1*c =	0.60156 in	
$\phi_{moment} = 0.75 \le 0.65 + 0.15(\frac{d}{c} - 1) \le 0.9$	0.9	per 5.5.4.2.1
Mr $= \phi_{moment} A_s f_y \left(d - \frac{a}{2}\right) =$	39.3682 kip-ft	
Mu	0.00 kip-ft	**ok**

Check Minimum Flexural Reinforcing (5.7.3.3.2)

fr $= 0.24\sqrt{f'_c} =$	0.48 ksi	
I_g $= \frac{1}{12} b_w t_{ped}{}^3 =$	13824 in^4	
y_t $= \frac{1}{2} t_{ped} =$	12 in	

γ_3 = 0.67 γ_1 = 1.2

Mcr $= \gamma_3 \gamma_1 f_r \frac{I_g}{y_t} =$	37.0483 k-ft	
1.33Mu =	0 k-ft	

Vu	-8.96 k	**ok**

Note: Per 5.10.8, Footings are exempt from temperature/shrinkage steel requirements

Check Crack Control (5.7.3.4)

$\rho = \frac{A_s}{b_w d} =$	0.0016	
k $= \sqrt{2\rho\eta + (\rho\eta)^2} - \rho\eta =$	0.1462	
j $= 1 - \frac{k}{3} =$	0.9513	
Ms	0.00	
$fss = \frac{M_s}{A_s j d} =$	0 ksi	
d_c $= t - d =$	2.3125 in	
βs $= 1 + \frac{d_c}{0.7(t - d_c)} =$	1.1523	
γ_e =	0.75	
s_max $= \frac{700\gamma_e}{\beta_s f_{ss} b_w} - 2d_c =$	#DIV/0! in	**#DIV/0!**

Check Shear Resistance (5.8.3.3)

d_v $= \max(0.72t, 0.9d)$	19.519	
β	2	
Vr $= \phi_{shear} 0.0316 \beta \sqrt{f'_c} b_w d_v =$	26.645 k	
Vu	0.00 k	**ok**

Note: Per 5.10.8, Footings are exempt from temperature/shrinkage steel requirements

Check Mr > min(1.33Mu,Mcr)	39.3682 k-ft	**ok**

Footing Btm Face - Structural Design

Btm Face Results	Heel	Toe
Mu	7.16	-27.83
Vu	2.72	-15.33
Ms	11.77	-19.71

Notes:
Positive Values indicates tension on top face
Negative Values indicates tension on btm face

Footing Btm Face Rebar Layout

Bar	# 6	Space	9 in	Diam	0.75 in	As	0.589 in^2	Cover	2 in

Check Moment Resistance

d = $t_{foot} - cover - \frac{diam}{2} =$	15.625 in	
c $= \frac{A_s F_y}{0.85 f'_c \beta_1 b_w} =$	1.01912 in	
Per AASHTO 5.7.3.2, fy may be substituted for fs when c/d <0.60:		
c/d =	0.06522	**ok**
a = $\beta 1$*c =	0.86625 in	
$\phi_{moment} = 0.75 \le 0.65 + 0.15(\frac{d}{c} - 1) \le 0.9$	0.9	per 5.5.4.2.1
Mr $= \phi_{moment} A_s f_y \left(d - \frac{a}{2}\right) =$	40.2694 kip-ft	
Mu	-27.83 kip-ft	**ok**

Check Minimum Flexural Reinforcing (5.7.3.3.2)

fr $= 0.24\sqrt{f'_c} =$	0.48 ksi	
I_g $= \frac{1}{12} b_w t_{foot}^3 =$	5832 in^4	
y_t $= \frac{1}{2} t_{foot} =$	9 in	
γ_3 = 0.67 γ_1 = 1.2		
Mcr $= \gamma_3 \gamma_1 f_r \frac{I_g}{y_t} =$	20.8397 k-ft	
1.33Mu =	37.0103 k-ft	
Check Mr > min(1.33Mu,Mcr)	40.2694 k-ft	**ok**

Check Crack Control (5.7.3.4)

$\rho = \frac{A_s}{b_w d} =$	0.0031	
k $= \sqrt{2\rho\eta + (\rho\eta)^2} - \rho\eta =$	0.2	
j $= 1 - \frac{k}{3} =$	0.9333	
Ms	-19.71	
$fss = \frac{M_s}{A_s j d} =$	27.532 ksi	
d_c $= t - d =$	2.375 in	
βs $= 1 + \frac{d_c}{0.7(t - d_c)} =$	1.2171	
γ_e =	0.75	
s_max $= \frac{700\gamma_e}{\beta_s f_{ss} b_w} - 2d_c =$	10.9 in	**ok**

Check Shear Resistance (5.8.3.3)

d_v $= \max(0.72t, 0.9d)$	14.063	
β	2	
Vr $= \phi_{shear} 0.0316 \beta \sqrt{f'_c} b_w d_v =$	19.197 k	
Vu	-15.33 k	**ok**

Note: Per 5.10.8, Footings are exempt from temperature/shrinkage steel requirements

Footing Top Face - Structural Design

Top Face Results	Heel
Mu	16.94
Vu	9.68
Ms	16.60

Notes:
Positive Values indicates tension on top face
Negative Values indicates tension on btm face

Footing Top Face Rebar Layout

Bar # 5 Space 8 in Diam 0.63 in As 0.4602 in^2 Cover 2 in

Check Moment Resistance

d = $t_{foot} - cover - \frac{diam}{2} =$	15.6875 in	
c $= \frac{A_s F_y}{0.85 f'_c \beta_1 b_w} =$	0.79618 in	
Per AASHTO 5.7.3.2, fy may be substituted for fs when c/d <0.60:		
c/d =	0.05075	**ok**
a = $\beta 1$*c =	0.67676 in	
$\phi_{moment} = 0.75 \le 0.65 + 0.15(\frac{d}{c} - 1) \le 0.9$	0.9	per 5.5.4.2.1
Mr $= \phi_{moment} A_s f_y \left(d - \frac{a}{2}\right) =$	31.7861 kip-ft	
Mu	16.94 kip-ft	**ok**

Check Minimum Flexural Reinforcing (5.7.3.3.2)

fr $= 0.24\sqrt{f'_c} =$	0.48 ksi	
I_g $= \frac{1}{12} b_w t_{foot}^3 =$	5832 in^4	
y_t $= \frac{1}{2} t_{foot} =$	9 in	
γ_3 = 0.67 γ_1 = 1.2		
Mcr $= \gamma_3 \gamma_1 f_r \frac{I_g}{y_t} =$	20.8397 k-ft	
1.33Mu =	22.5334 k-ft	
Check Mr > min(1.33Mu,Mcr)	31.7861 k-ft	**ok**

Check Crack Control (5.7.3.4)

$\rho = \frac{A_s}{b_w d} =$	0.0024	
k $= \sqrt{2\rho\eta + (\rho\eta)^2} - \rho\eta =$	0.1788	
j $= 1 - \frac{k}{3} =$	0.9404	
Ms	16.60	
fss $= \frac{M_s}{A_s j d} =$	29.337 ksi	
d_c $= t - d =$	2.3125 in	
βs $= 1 + \frac{d_c}{0.7(t - d_c)} =$	1.2106	
γ_e =	0.75	
s_max $= \frac{700\gamma_e}{\beta_s f_{ss} b_w} - 2d_c =$	10.2 in	**ok**

Check Shear Resistance (5.8.3.3)

d_v $= \max(0.72t, 0.9d)$	14.119	
β	2	
Vr $= \phi_{shear} 0.0316 \beta \sqrt{f'_c} b_w d_v =$	19.274 k	
Vu	9.68 k	**ok**

Note: Per 5.10.8, Footings are exempt from temperature/shrinkage steel requirements

Geometry

ELEV Top Wing @ Anchor #1	1005.83	ft	
ELEV Top Ped	993.67	ft	*ignores keyway*
ELEV Btm Footing	989.66	ft	
Footing Thickness	1.50	ft	
Pedestal Height	2.51	ft	
Wing Panel Height	12.16	ft	
Foundation Height	4.01	ft	
Depth over wing @ back of anchor	0.00	ft	
BO Footing to FG	16.17		
LS Equiv Soil Ht per AASHTO 3.11.6.4	0.00	ft	
Wing Panel Width	0.83	ft	
Pedestal Width	2.00	ft	
Toe Width	2.00	ft	
Heel Width	3.00	ft	
Footing Width	7.00	ft	
Design Section Width, bw	1.00	ft	
Section Weight	2,329	plf	

Note: For strip footings, Ped Height = 0 and Ped Width = Wing Panel Width

Material Properties

Soils			
Backfill Soil Unit Weight	0.140	kcf	
Backfill Soil Friction Angle, ϕf	34.00	deg	
Lateral Earth Pressure Coef, K	0.307		
Foundation-Footing Friction Coefficient	0.54		=0.8tan(34)
Factored Bearing Resistance	10.26	ksf	per contract plans sht 6, beff = 4.32
Concrete			
Concrete Unit Weight	0.150	kcf	
f'c	4.00	ksi	
Aggregate Diam	0.75	in	
Ec	3,644	ksi	AASHTO 5.4.2.4
$\beta 1$	0.85		AASHTO 5.7.2.2
Steel			
fy	60	ksi	
Es	29,000	ksi	
n (eta)	7.958		

beff	4	12	4.32
qR	10	16.5	10.26

Unfactored Wing Reactions

	Case	Force (k)	
Vertical	DC	1.729	WW2 Anchor 1, p8
	DW	0	
	EV	6.976	WW2 Anchor 1, p8
	EH	0.316	WW2 Anchor 1, p9
	LS	0	
	LL	0	
Horizontal	DC	0	
	DW	0	
	EV	0	
	EH	-1.341	WW2 Anchor 1, p9
	LS	0	
	LL	0	

Note: Positive forces are down and toward backfill

Load Factors

Case	Max	Min	Serv
DC	1.25	0.9	1
DW	1.5	0.65	1
EV	1.35	1	1
EH	1.5	0.9	1
LS	1.75	0	1
LL	1.75	0	1

Resistance Factors

Shear	0.9
Sliding	0.9
Bearing	0.45

Assumptions

-Case 1: Maximum Lateral Backfill Load Factor

Check Max and Min Vertical loads

Check With and Without Live Load

-Case 2: Minimum Lateral Backfill Load Factor

Check Max and Min Vertical loads

Check With and Without Live Load

-Allow passive backfill resistance? Yes 1

Case 1: Maximum Lateral Backfill Loads

Note: Positive Forces Are Down and Toward Backfill

Load Description	Dir	Case	Force (k)	Arm (ft)	Max Vert w/LL Factor	Max Vert w/LL F (k)	Max Vert w/LL M (k-ft)	Max Vert No LL Factor	Max Vert No LL F (k)	Max Vert No LL M (k-ft)	Min Vert w/LL Factor	Min Vert w/LL F (k)	Min Vert w/LL M (k-ft)	Min Vert No LL Factor	Min Vert No LL F (k)	Min Vert No LL M (k-ft)	Service Factor	Service F (k)	Service M (k-ft)
From Structure	V	DC	1.73	3.00	1.25	2.16	6.48	1.25	2.16	6.48	0.9	1.56	4.67	0.9	1.56	4.67	1	1.73	5.19
		DW	0.00	3.00	1.5	0.00	0.00	1.5	0.00	0.00	0.65	0.00	0.00	0.65	0.00	0.00	1	0.00	0.00
		EV	6.98	3.00	1.35	9.42	28.25	1.35	9.42	28.25	1	6.98	20.93	1	6.98	20.93	1	6.98	20.93
		EH	0.32	3.00	1.5	0.47	1.42	1.5	0.47	1.42	1.5	0.47	1.42	1.5	0.47	1.42	1	0.32	0.95
		LS	0.00	3.00	1.75	0.00	0.00	1.75	0.00	0.00	1.75	0.00	0.00	1.75	0.00	0.00	1	0.00	0.00
		LL	0.00	3.00	1.75	0.00	0.00	0	0.00	0.00	1.75	0.00	0.00	0	0.00	0.00	1	0.00	0.00
	H	DC	0.00	4.01	1.25	0.00	0.00	1.25	0.00	0.00	0.9	0.00	0.00	0.9	0.00	0.00	1	0.00	0.00
		DW	0.00	4.01	1.5	0.00	0.00	1.5	0.00	0.00	0.65	0.00	0.00	0.65	0.00	0.00	1	0.00	0.00
		EV	0.00	4.01	1.35	0.00	0.00	1.35	0.00	0.00	1	0.00	0.00	1	0.00	0.00	1	0.00	0.00
		EH	-1.34	4.01	1.5	-2.01	-8.07	1.5	-2.01	-8.07	1.5	-2.01	-8.07	1.5	-2.01	-8.07	1	-1.34	-5.38
		LS	0.00	4.01	1.75	0.00	0.00	1.75	0.00	0.00	1.75	0.00	0.00	1.75	0.00	0.00	1	0.00	0.00
		LL	0.00	4.01	1.75	0.00	0.00	0	0.00	0.00	1.75	0.00	0.00	0	0.00	0.00	1	0.00	0.00
EV heel	V	EV	1.06	5.50	1.35	1.43	7.84	1.35	1.43	7.84	1	1.06	5.81	1	1.06	5.81	1	1.06	5.81
EV ped	V	EV	0.00	3.71	1.35	0.00	0.00	1.35	0.00	0.00	1	0.00	0.00	1	0.00	0.00	1	0.00	0.00
DC foot	V	DC	1.58	3.50	1.25	1.97	6.89	1.25	1.97	6.89	0.9	1.42	4.96	0.9	1.42	4.96	1	1.58	5.51
DC pedestal	V	DC	0.75	3.00	1.25	0.94	2.83	1.25	0.94	2.83	0.9	0.68	2.04	0.9	0.68	2.04	1	0.75	2.26
LS footing	H	LS	0.00	2.01	1.75	0.00	0.00	1.75	0.00	0.00	1.75	0.00	0.00	1.75	0.00	0.00	1	0.00	0.00
EH ftg	H	EH	-0.35	1.34	1.5	-0.52	-0.70	1.5	-0.52	-0.70	1.5	-0.52	-0.70	1.5	-0.52	-0.70	1	-0.35	-0.46
EH overburden	H	EH	-2.10	2.01	1.5	-3.15	-6.32	1.5	-3.15	-6.32	1.5	-3.15	-6.32	1.5	-3.15	-6.32	1	-2.10	-4.21

Results

Driving Moments *(active behind)*			-15.09				-15.09				-15.09				-15.09				-10.06
Driving Moments *(passive behind)*			-85.24				-85.24				-85.24				-85.24				-56.82
Resisting Moments			53.71				53.71				39.82				39.82				40.64
Total Vertical		16.39	k			16.39	k			12.16	k			12.16	k			12.41	k
Location of Resultant *(active behind)*		2.36	ft			2.36	ft			2.03	ft			2.03	ft			2.47	ft
Location of Resultant *(passive Behind)*		-1.92	k-ft			-1.92	k-ft			-3.74	k-ft			-3.74	k-ft			-1.30	k-ft
Eccentricity,e (negative is toward heel)		1.14	ft			1.14	ft			1.47	ft			1.47	ft			1.03	ft
Check Allowable Eccentricity = b/4 =	**ok**	1.75	ft	**ok**		1.75	ft	**ok**		1.75	ft	**ok**		1.75	ft	**ok**		1.75	ft
Total Horizontal Load (positive is toward heel)		-5.68	k			-5.68	k			-5.68	k			-5.68	k			-3.79	k
Available Passive resistance		-36.69	ft			-36.69	ft			-36.69	ft			-36.69	ft			-24.46	ft
Check Sliding Resistance $= \phi * \tan(\delta) * \Sigma V$	**ok**	7.96	k	**ok**		7.96	k	**ok**		5.90	k	**ok**		5.90	k	**ok**		6.02	k
Effective Footing Width, beff		4.71	ft			4.71	ft			4.07	ft			4.07	ft			4.93	ft
Factored Bearing Resistance		10.26	ksf			10.26	ksf			10.26	ksf			10.26	ksf			10.26	ksf
Check Bearing Pressure $= \Sigma V / beff$	**ok**	3.48	ksf	**ok**		3.48	ksf	**ok**		2.99	ksf	**ok**		2.99	ksf	**ok**		2.52	ksf

Case 2: Minimum Lateral Backfill Loads

Note: Positive Forces Are Down and Toward Backfill

Load Description	Dir	Case	Force (k)	Arm (ft)	Max Vert w/LL Factor	Max Vert w/LL F (k)	Max Vert w/LL M (k-ft)	Max Vert No LL Factor	Max Vert No LL F (k)	Max Vert No LL M (k-ft)	Min Vert w/LL Factor	Min Vert w/LL F (k)	Min Vert w/LL M (k-ft)	Min Vert No LL Factor	Min Vert No LL F (k)	Min Vert No LL M (k-ft)	Service Factor	Service F (k)	Service M (k-ft)
From Structure	V	DC	1.73	3.00	1.25	2.16	6.48	1.25	2.16	6.48	0.9	1.56	4.67	0.9	1.56	4.67	1	1.73	5.19
		DW	0.00	3.00	1.5	0.00	0.00	1.5	0.00	0.00	0.65	0.00	0.00	0.65	0.00	0.00	1	0.00	0.00
		EV	6.98	3.00	1.35	9.42	28.25	1.35	9.42	28.25	1	6.98	20.93	1	6.98	20.93	1	6.98	20.93
		EH	0.32	3.00	0.9	0.28	0.85	0.9	0.28	0.85	0.9	0.28	0.85	0.9	0.28	0.85	1	0.32	0.95
		LS	0.00	3.00	0	0.00	0.00	0	0.00	0.00	0	0.00	0.00	0	0.00	0.00	1	0.00	0.00
		LL	0.00	3.00	1.75	0.00	0.00	0	0.00	0.00	1.75	0.00	0.00	0	0.00	0.00	1	0.00	0.00
	H	DC	0.00	4.01	1.25	0.00	0.00	1.25	0.00	0.00	0.9	0.00	0.00	0.9	0.00	0.00	1	0.00	0.00
		DW	0.00	4.01	1.5	0.00	0.00	1.5	0.00	0.00	0.65	0.00	0.00	0.65	0.00	0.00	1	0.00	0.00
		EV	0.00	4.01	1.35	0.00	0.00	1.35	0.00	0.00	1	0.00	0.00	1	0.00	0.00	1	0.00	0.00
		EH	-1.34	4.01	0.9	-1.21	-4.84	0.9	-1.21	-4.84	0.9	-1.21	-4.84	0.9	-1.21	-4.84	1	-1.34	-5.38
		LS	0.00	4.01	0	0.00	0.00	0	0.00	0.00	0	0.00	0.00	0	0.00	0.00	1	0.00	0.00
		LL	0.00	4.01	1.75	0.00	0.00	0	0.00	0.00	1.75	0.00	0.00	0	0.00	0.00	1	0.00	0.00
EV heel	V	EV	1.06	5.50	1.35	1.43	7.84	1.35	1.43	7.84	1	1.06	5.81	1	1.06	5.81	1	1.06	5.81
EV ped	V	EV	0.00	3.71	1.35	0.00	0.00	1.35	0.00	0.00	1	0.00	0.00	1	0.00	0.00	2	0.00	0.00
DC foot	V	DC	1.58	3.50	1.25	1.97	6.89	1.25	1.97	6.89	0.9	1.42	4.96	0.9	1.42	4.96	1	1.58	5.51
DC pedestal	V	DC	0.75	3.00	1.25	0.94	2.83	1.25	0.94	2.83	0.9	0.68	2.04	0.9	0.68	2.04	1	0.75	2.26
LS footing	H	LS	0.00	2.01	0	0.00	0.00	0	0.00	0.00	0	0.00	0.00	0	0.00	0.00	1	0.00	0.00
EH ftg	H	EH	-0.35	1.34	0.9	-0.31	-0.42	0.9	-0.31	-0.42	0.9	-0.31	-0.42	0.9	-0.31	-0.42	1	-0.35	-0.46
EH overburden	H	EH	-2.10	2.01	0.9	-1.89	-3.79	0.9	-1.89	-3.79	0.9	-1.89	-3.79	0.9	-1.89	-3.79	1	-2.10	-4.21

Results

Driving Moments (active behind)			-9.053				-9.053				-9.053				-9.053				-10.06
Driving Moments (passive behind)			-51.14				-51.14				-51.14				-51.14				-56.82
Resisting Moments			53.15				53.15				39.25				39.25				40.64
Total Vertical		16.20	k			16.20	k			11.97	k			11.97	k			12.41	k
Location of Resultant (active behind)		2.72	ft			2.72	ft			2.52	ft			2.52	ft			2.47	ft
Location of Resultant (passive Behind)		0.12	k-ft			0.12	k-ft			-0.99	k-ft			-0.99	k-ft			-1.30	k-ft
Eccentricity,e (negative is toward heel)		0.78	ft			0.78	ft			0.98	ft			0.98	ft			1.03	ft
Check Allowable Eccentricity = b/4 =	**ok**	1.75	ft	**ok**		1.75	ft	**ok**		1.75	ft	**ok**		1.75	ft	**ok**		1.75	ft
Total Horizontal Load (positive is toward heel)		-3.41	k			-3.41	k			-3.41	k			-3.41	k			-3.79	k
Available Passive resistance		-22.01	ft			-22.01	ft			-22.01	ft			-22.01	ft			-24.46	ft
Check Sliding Resistance $= \phi * \tan(\delta) * \Sigma V$	**ok**	7.87	k	**ok**		7.87	k	**ok**		5.81	k	**ok**		5.81	k	**ok**		6.02	k
Effective Footing Width, beff		5.44	ft			5.44	ft			5.05	ft			5.05	ft			4.93	ft
Factored Bearing Resistance		10.26	ksf			10.26	ksf			10.26	ksf			10.26	ksf			10.26	ksf
Check Bearing Pressure $= \Sigma V / beff$	**ok**	2.98	ksf	**ok**		2.98	ksf	**ok**		2.37	ksf	**ok**		2.37	ksf	**ok**		2.52	ksf

Pedestal Design Forces: Case 1 Maximum Lateral Backfill Loads

Note: Positive Forces Are Toward Backfill

Load Description	Dir	Case	Force (k)	Arm (ft)	Max Vert w/LL Factor	Max Vert w/LL F (k)	Max Vert w/LL M (k-ft)	Max Vert No LL Factor	Max Vert No LL F (k)	Max Vert No LL M (k-ft)	Min Vert w/LL Factor	Min Vert w/LL F (k)	Min Vert w/LL M (k-ft)	Min Vert No LL Factor	Min Vert No LL F (k)	Min Vert No LL M (k-ft)	Service Factor	Service F (k)	Service M (k-ft)
From Structure	H	DC	0.00	2.51	1.25	0.00	0.00	1.25	0.00	0.00	0.9	0.00	0.00	0.9	0.00	0.00	1	0.00	0.00
		DW	0.00	2.51	1.5	0.00	0.00	1.5	0.00	0.00	0.65	0.00	0.00	0.65	0.00	0.00	1	0.00	0.00
		EV	0.00	2.51	1.35	0.00	0.00	1.35	0.00	0.00	1	0.00	0.00	1	0.00	0.00	1	0.00	0.00
		EH	-1.34	2.51	1.5	-2.01	-5.06	1.5	-2.01	-5.06	1.5	-2.01	-5.06	1.5	-2.01	-5.06	1	-1.34	-3.37
		LS	0.00	2.51	1.75	0.00	0.00	1.75	0.00	0.00	1.75	0.00	0.00	1.75	0.00	0.00	1	0.00	0.00
		LL	0.00	2.51	1.75	0.00	0.00	0	0.00	0.00	1.75	0.00	0.00	0	0.00	0.00	0	0.00	0.00
LS footing	H	LS	0.00	1.26	1.75	0.00	0.00	1.75	0.00	0.00	1.75	0.00	0.00	1.75	0.00	0.00	1	0.00	0.00
EH ftg	H	EH	-0.14	0.84	1.5	-0.20	-0.17	1.5	-0.20	-0.17	1.5	-0.20	-0.17	1.5	-0.20	-0.17	1	-0.14	-0.11
EH overburden	H	EH	-1.31	1.26	1.5	-1.97	-2.48	1.5	-1.97	-2.48	1.5	-1.97	-2.48	1.5	-1.97	-2.48	1	-1.31	-1.65
				Totals		-4.19	-7.70		-4.19	-7.70		-4.19	-7.70		-4.19	-7.70		-2.79	-5.14

Ped Results: Case 1	Max	Min
Mu	-7.70	-7.70
Vu	-4.19	-4.19
Ms	-5.14	

Notes:

Positive Values indicates tension on toe face. Use for Toe Face design

Negative Values indicates tension on heel face. Use for Heel Face design

Footing Design Forces: Case 1 Maximum Lateral Backfill Loads

Note: Positive Forces Are Down

	Max Vert w/LL Factor	Max Vert w/LL Load	Max Vert No LL Factor	Max Vert No LL Load	Min Vert w/LL Factor	Min Vert w/LL Load	Min Vert No LL Factor	Min Vert No LL Load	Service Factor	Service Load
Total Vertical Load		16.39 k		16.39 k		12.16 k		12.16 k		12.41 k
Eccentricity, e (negative is toward heel)		1.14 ft		1.14 ft		1.47 ft		1.47 ft		1.03 ft
Note: Bearing Pressure for Structural Design to be trapezoidal per 10.6.5:		*B/6 = 1.167*								
Bearing Pressure @ Heel (AASHTO 11.6.3.2)		-0.047 ksf		-0.047 ksf		0 ksf		0 ksf		-0.201 ksf
Bearing Pressure @ Toe (AASHTO 11.6.3.2)		-4.635 ksf		-4.635 ksf		-3.984 ksf		-3.984 ksf		-3.344 ksf
Bearing Pressure @ Toe Face of Pedestal		-3.325 ksf		-3.325 ksf		-2.846 ksf		-2.846 ksf		-2.446 ksf
Bearing Pressure @ Heel face of Pedestal		-2.014 ksf		-2.014 ksf		-1.707 ksf		-1.707 ksf		-1.548 ksf
DC Toe	1.25	0.5625 k	1.25	0.5625 k	0.90	0.405 k	0.90	0.405 k	1	0.45 k
Upward Moment @ Toe face of Pedestal		-10.46 k-ft		-10.46 k-ft		-9.081 k-ft		-9.081 k-ft		-7.435 k-ft
Upward Shear @ Toe face of Pedestal		-7.397 k		-7.397 k		-6.425 k		-6.425 k		-5.34 k
DC Heel	1.25	0.8438 k	1.25	0.8438 k	0.90	0.6075 k	0.90	0.6075 k	1	0.675 k
EV Heel	1.35	6.16 k	1.35	6.16 k	1.00	6.16 k	1.00	6.16 k	1	6.16 k
Net Moment @ Heel face of Pedestal		7.3479 k-ft		7.3479 k-ft		7.5942 k-ft		7.5942 k-ft		7.3333 k-ft
Net Shear @ Heel face of Pedestal		3.9154 k		3.9154 k		4.2091 k		4.2091 k		4.2153 k

Downward Only Moment @ Heel face of Pedestal (per 11.6.1.2)		10.51 k-ft		10.51 k-ft		10.155 k-ft		10.155 k-ft		10.257 k-ft
Downward Only Shear @ Heel face of Pedestal (per 11.6.1.2)		7.01 k		7.01 k		6.77 k		6.77 k		6.84 k

Ftg Heel Face Results: Case 1	Max	Min
Mu	10.51	7.3479
Vu	7.01	3.9154
Ms	10.26	7.3333

Ftg Toe Face Results: Case 1	Min
Mu	-10.46
Vu	-7.40
Ms	-7.44

Note: Positive Values indicate tension on top of footing

Pedestal Design Forces: Case 2 Minimum Lateral Backfill Loads

Note: Positive Forces Are Toward Backfill

Load Description	Dir	Case	Force (k)	Arm (ft)	Max Vert w/LL Factor	F (k)	M (k-ft)	Max Vert No LL Factor	F (k)	M (k-ft)	Min Vert w/LL Factor	F (k)	M (k-ft)	Min Vert No LL Factor	F (k)	M (k-ft)	Service Factor	F (k)	M (k-ft)
From Structure	H	DC	0.00	2.51	1.25	0.00	0.00	1.25	0.00	0.00	0.9	0.00	0.00	0.9	0.00	0.00	1	0.00	0.00
		DW	0.00	2.51	1.5	0.00	0.00	1.5	0.00	0.00	0.65	0.00	0.00	0.65	0.00	0.00	1	0.00	0.00
		EV	0.00	2.51	1.35	0.00	0.00	1.35	0.00	0.00	1	0.00	0.00	1	0.00	0.00	1	0.00	0.00
		EH	-1.34	2.51	0.9	-1.21	-3.03	0.9	-1.21	-3.03	0.9	-1.21	-3.03	0.9	-1.21	-3.03	0.5	-0.67	-1.69
		LS	0.00	2.51	0	0.00	0.00	0	0.00	0.00	0	0.00	0.00	0	0.00	0.00	0	0.00	0.00
		LL	0.00	2.51	1.75	0.00	0.00	0	0.00	0.00	1.75	0.00	0.00	0	0.00	0.00	1	0.00	0.00
LS footing	H	LS	0.00	1.26	0	0.00	0.00	0	0.00	0.00	0	0.00	0.00	0	0.00	0.00	0.5	0.00	0.00
EH ftg	H	EH	-0.14	0.84	0.9	-0.12	-0.10	0.9	-0.12	-0.10	0.9	-0.12	-0.10	0.9	-0.12	-0.10	0.5	-0.07	-0.06
EH overburden	H	EH	-1.31	1.26	0.9	-1.18	-1.49	0.9	-1.18	-1.49	0.9	-1.18	-1.49	0.9	-1.18	-1.49	0.5	-0.66	-0.83
				Totals		-2.51	-4.62		-2.51	-4.62		-2.51	-4.62		-2.51	-4.62		-1.40	-2.57

Ped Results: Case 2	Max	Min
Mu	-4.62	-4.62
Vu	-2.51	-2.51
Ms	-2.57	

Notes:
Positive Values indicates tension on toe face. Use for Toe Face design
Negative Values indicates tension on heel face. Use for Heel Face design

Footing Design Forces: Case 2 Minimum Lateral Backfill Loads

Note: Positive Forces Are Down

	Max Vert w/LL Factor	Load	Max Vert No LL Factor	Load	Min Vert w/LL Factor	Load	Min Vert No LL Factor	Load	Service Factor	Load
Total Vertical Load		16.20 k		16.20 k		11.97 k		11.97 k		12.41 k
Eccentricity, e (negative is toward heel)		0.78 ft		0.78 ft		0.98 ft		0.98 ft		1.03 ft
Note: Bearing Pressure for Structural Design to be trapezoidal per 10.6.5:		*B/6 = 1.167*								
Bearing Pressure @ Heel (AASHTO 11.6.3.2)		-0.771 ksf		-0.771 ksf		-0.278 ksf		-0.278 ksf		-0.201 ksf
Bearing Pressure @ Toe (AASHTO 11.6.3.2)		-3.858 ksf		-3.858 ksf		-3.141 ksf		-3.141 ksf		-3.344 ksf
Bearing Pressure @ Toe Face of Pedestal		-2.976 ksf		-2.976 ksf		-2.323 ksf		-2.323 ksf		-2.446 ksf
Bearing Pressure @ Heel face of Pedestal		-2.094 ksf		-2.094 ksf		-1.505 ksf		-1.505 ksf		-1.548 ksf
DC Toe	1.25	0.5625 k	1.25	0.5625 k	0.90	0.405 k	0.90	0.405 k	1	0.45 k
Upward Moment @ Toe face of Pedestal		-8.329 k-ft		-8.329 k-ft		-6.968 k-ft		-6.968 k-ft		-7.435 k-ft
Upward Shear @ Toe face of Pedestal		-6.271 k		-6.271 k		-5.059 k		-5.059 k		-5.34 k
DC Heel	1.25	0.8438 k	1.25	0.8438 k	0.90	0.6075 k	0.90	0.6075 k	1	0.675 k
EV Heel	1.35	6.16 k	1.35	6.16 k	1.00	6.16 k	1.00	6.16 k	1	6.16 k
Net Moment @ Heel face of Pedestal		5.0571 k-ft		5.0571 k-ft		7.0622 k-ft		7.0622 k-ft		7.3333 k-ft
Net Shear @ Heel face of Pedestal		2.7099 k		2.7099 k		4.0947 k		4.0947 k		4.2153 k

Downward Only Moment @ Heel face of Pedestal (per 11.6.1.2)		10.51 k-ft		10.51 k-ft		10.16 k-ft		10.16 k-ft		10.26 k-ft
Downward Only Shear @ Heel face of Pedestal (per 11.6.1.2)		7.01 k		7.01 k		6.77 k		6.77 k		6.84 k

Ftg Heel Face Results: Case 2	Max	Min
Mu	10.51	5.0571
Vu	7.01	2.7099
Ms	10.26	7.3333

Ftg Toe Face Results: Case 2	Min
Mu	-8.33
Vu	-6.27
Ms	-7.44

Note: Positive Values indicate tension on top of footing

Pedestal Structural Design Results

Pedestal Results	Max	Min
Mu	-4.62	-7.70
Vu	-2.51	-4.19
Ms	-2.57	-5.14

Notes:
Positive Values indicates tension on toe face. Use for Toe Face design
Negative Values indicates tension on heel face. Use for Heel Face design

Pedestal Heel Face Rebar Layout

Bar	# 5	Space	10 in	Diam	0.63 in	As	0.3682 in^2	Cover	2 in

Check Moment Resistance

d = $t_{ped} - cover - \frac{diam}{2} =$	21.6875 in	
c $= \frac{A_s F_y}{0.85 f'_c \beta_1 b_w} =$	0.63695 in	
Per AASHTO 5.7.3.2, fy may be substituted for fs when c/d <0.60:		
c/d =	0.02937	**ok**
a = β1*c =	0.5414 in	
$\phi_{moment} = 0.75 \le 0.65 + 0.15(\frac{d}{c} - 1) \le 0.9$	0.9	per 5.5.4.2.1
Mr $= \phi_{moment} A_s f_y \left(d - \frac{a}{2}\right) =$	35.4812 kip-ft	
Mu	-7.70 kip-ft	**ok**

Check Minimum Flexural Reinforcing (5.7.3.3.2)

fr $= 0.24\sqrt{f'_c} =$	0.48 ksi	
I_g $= \frac{1}{12} b_w t_{ped}^3 =$	13824 in^4	
y_t $= \frac{1}{2} t_{ped} =$	12 in	

$\gamma_3 =$ 0.67 $\gamma_1 =$ 1.2

Check Crack Control (5.7.3.4)

$\rho = \frac{A_s}{b_w d} =$	0.0014	
k $= \sqrt{2\rho\eta + (\rho\eta)^2} - \rho\eta =$	0.1392	
j $= 1 - \frac{k}{3} =$	0.9536	
Ms	-5.14	
$fss = \frac{M_s}{A_s j d} =$	8.0956 ksi	
d_c $= t - d =$	2.3125 in	
βs $= 1 + \frac{d_c}{0.7(t - d_c)} =$	1.1523	
γ_e =	0.75	
s_max $= \frac{700\gamma_e}{\beta_s f_{ss} b_w} - 2d_c =$	51.7 in	**ok**

Check Shear Resistance (5.8.3.3)

d_v $= \max(0.72t, 0.9d)$	19.519 in
β	2
Vr $= \phi_{shear} 0.0316 \beta \sqrt{f'_c} b_w d_v =$	26.645 k

Mcr $= \gamma_3 \gamma_1 f_r \frac{I_g}{y_t} =$	37.0483 k-ft	
1.33Mu =	10.2474 k-ft	
Check Mr > min(1.33Mu,Mcr)	35.4812 k-ft	**ok**

Pedestal Toe Face Rebar Layout

Bar	# 5	Space	10 in	Diam	0.63 in	As	0.3682 in^2	Cover	2 in

Check Moment Resistance

d = $t_{ped} - cover - \frac{diam}{2} =$	21.6875 in	
c $= \frac{A_s F_y}{0.85 f'_c \beta_1 b_w} =$	0.63695 in	

Per AASHTO 5.7.3.2, fy may be substituted for fs when c/d <0.60:

c/d =	0.02937	**ok**
a = β1*c =	0.5414 in	
$\phi_{moment} = 0.75 \le 0.65 + 0.15(\frac{d}{c} - 1) \le 0.9$	0.9	per 5.5.4.2.1
Mr $= \phi_{moment} A_s f_y \left(d - \frac{a}{2}\right) =$	35.4812 kip-ft	
Mu	0.00 kip-ft	**ok**

Check Minimum Flexural Reinforcing (5.7.3.3.2)

fr $= 0.24\sqrt{f'_c} =$	0.48 ksi	
I_g $= \frac{1}{12} b_w t_{ped}^3 =$	13824 in^4	
y_t $= \frac{1}{2} t_{ped} =$	12 in	

$\gamma_3 =$ 0.67 $\gamma_1 =$ 1.2

Mcr $= \gamma_3 \gamma_1 f_r \frac{I_g}{y_t} =$	37.0483 k-ft	
1.33Mu =	0 k-ft	
Vu	-4.19 k	**ok**

Note: Per 5.10.8, Footings are exempt from temperature/shrinkage steel requirements

Check Crack Control (5.7.3.4)

$\rho = \frac{A_s}{b_w d} =$	0.0014	
k $= \sqrt{2\rho\eta + (\rho\eta)^2} - \rho\eta =$	0.1392	
j $= 1 - \frac{k}{3} =$	0.9536	
Ms	0.00	
$fss = \frac{M_s}{A_s j d} =$	0 ksi	
d_c $= t - d =$	2.3125 in	
βs $= 1 + \frac{d_c}{0.7(t - d_c)} =$	1.1523	
γ_e =	0.75	
s_max $= \frac{700\gamma_e}{\beta_s f_{ss} b_w} - 2d_c =$	#DIV/0! in	**#DIV/0!**

Check Shear Resistance (5.8.3.3)

d_v $= \max(0.72t, 0.9d)$	19.519	
β	2	
Vr $= \phi_{shear} 0.0316 \beta \sqrt{f'_c} b_w d_v =$	26.645 k	
Vu	0.00 k	**ok**

Note: Per 5.10.8, Footings are exempt from temperature/shrinkage steel requirements

Check Mr > min(1.33Mu,Mcr)	35.4812 k-ft	**ok**

Footing Btm Face - Structural Design

Btm Face Results	Heel	Toe
Mu	5.06	-10.46
Vu	2.71	-7.40
Ms	7.33	-7.44

Notes:
Positive Values indicates tension on top face
Negative Values indicates tension on btm face

Footing Btm Face Rebar Layout

Bar # 5 Space 10 in Diam 0.63 in As 0.3682 in^2 Cover 2 in

Check Moment Resistance

d = $t_{foot} - cover - \frac{diam}{2} =$	15.6875 in	
c $= \frac{A_s F_y}{0.85 f'_c \beta_1 b_w} =$	0.63695 in	
Per AASHTO 5.7.3.2, fy may be substituted for fs when c/d <0.60:		
c/d =	0.0406	**ok**
a = $\beta 1$*c =	0.5414 in	
$\phi_{moment} = 0.75 \le 0.65 + 0.15(\frac{d}{c} - 1) \le 0.9$	0.9	per 5.5.4.2.1
Mr $= \phi_{moment} A_s f_y \left(d - \frac{a}{2}\right) =$	25.541 kip-ft	
Mu	-10.46 kip-ft	**ok**

Check Minimum Flexural Reinforcing (5.7.3.3.2)

fr $= 0.24\sqrt{f'_c} =$	0.48 ksi	
I_g $= \frac{1}{12} b_w t_{foot}^3 =$	5832 in^4	
y_t $= \frac{1}{2} t_{foot} =$	9 in	
γ_3 = 0.67 γ_1 = 1.2		
Mcr $= \gamma_3 \gamma_1 f_r \frac{I_g}{y_t} =$	20.8397 k-ft	
1.33Mu =	13.9068 k-ft	
Check Mr > min(1.33Mu,Mcr)	25.541 k-ft	**ok**

Check Crack Control (5.7.3.4)

$\rho = \frac{A_s}{b_w d} =$	0.002	
k $= \sqrt{2\rho\eta + (\rho\eta)^2} - \rho\eta =$	0.1615	
j $= 1 - \frac{k}{3} =$	0.9462	
Ms	-7.44	
$fss = \frac{M_s}{A_s j d} =$	16.328 ksi	
d_c $= t - d =$	2.3125 in	
βs $= 1 + \frac{d_c}{0.7(t - d_c)} =$	1.2106	
γ_e =	0.75	
s_max $= \frac{700\gamma_e}{\beta_s f_{ss} b_w} - 2d_c =$	21.9 in	**ok**

Check Shear Resistance (5.8.3.3)

d_v $= \max(0.72t, 0.9d)$	14.119	
β	2	
Vr $= \phi_{shear} 0.0316 \beta \sqrt{f'_c} b_w d_v =$	19.274 k	
Vu	-7.40 k	**ok**

Note: Per 5.10.8, Footings are exempt from temperature/shrinkage steel requirements

Footing Top Face - Structural Design

Top Face Results	Heel
Mu	10.51
Vu	7.01
Ms	10.26

Notes:
Positive Values indicates tension on top face
Negative Values indicates tension on btm face

Footing Top Face Rebar Layout

Bar	# 5	Space	10 in	Diam	0.63 in	As	0.3682 in^2	Cover	2 in

Check Moment Resistance

d = $t_{foot} - cover - \frac{diam}{2} =$	15.6875 in	
c $= \frac{A_s F_y}{0.85 f'_c \beta_1 b_w} =$	0.63695 in	

Per AASHTO 5.7.3.2, fy may be substituted for fs when c/d <0.60:

c/d =	0.0406	**ok**
a = β1*c =	0.5414 in	
$\phi_{moment} = 0.75 \le 0.65 + 0.15(\frac{d}{c} - 1) \le 0.9$	0.9	per 5.5.4.2.1
Mr $= \phi_{moment} A_s f_y \left(d - \frac{a}{2}\right) =$	25.541 kip-ft	
Mu	10.51 kip-ft	**ok**

Check Minimum Flexural Reinforcing (5.7.3.3.2)

fr $= 0.24\sqrt{f'_c} =$	0.48 ksi	
I_g $= \frac{1}{12} b_w t_{foot}^3 =$	5832 in^4	
y_t $= \frac{1}{2} t_{foot} =$	9 in	

$\gamma_3 =$ 0.67 $\gamma_1 =$ 1.2

Mcr $= \gamma_3 \gamma_1 f_r \frac{I_g}{y_t} =$	20.8397 k-ft	
1.33Mu =	13.9781 k-ft	
Check Mr > min(1.33Mu,Mcr)	25.541 k-ft	**ok**

Check Crack Control (5.7.3.4)

$\rho = \frac{A_s}{b_w d} =$	0.002	
k $= \sqrt{2\rho\eta + (\rho\eta)^2} - \rho\eta =$	0.1615	
j $= 1 - \frac{k}{3} =$	0.9462	
Ms	10.26	
fss $= \frac{M_s}{A_s j d} =$	22.524 ksi	
d_c $= t - d =$	2.3125 in	
βs $= 1 + \frac{d_c}{0.7(t - d_c)} =$	1.2106	
γ_e =	0.75	
s_max $= \frac{700\gamma_e}{\beta_s f_{ss} b_w} - 2d_c =$	14.6 in	**ok**

Check Shear Resistance (5.8.3.3)

d_v $= \max(0.72t, 0.9d)$	14.119	
β	2	
Vr $= \phi_{shear} 0.0316 \beta \sqrt{f'_c} b_w d_v =$	19.274 k	
Vu	7.01 k	**ok**

Note: Per 5.10.8, Footings are exempt from temperature/shrinkage steel requirements

Geometry

ELEV Top Wing @ Anchor #1	1013.32	ft	
ELEV Top Ped	1001.16	ft	*ignores keyway*
ELEV Btm Footing	997.16	ft	
Footing Thickness	1.50	ft	
Pedestal Height	2.50	ft	
Wing Panel Height	12.16	ft	
Foundation Height	4.00	ft	
Depth over wing @ back of anchor	1.42	ft	
BO Footing to FG	17.59		
LS Equiv Soil Ht per AASHTO 3.11.6.4	0.00	ft	
Wing Panel Width	0.83	ft	
Pedestal Width	2.00	ft	
Toe Width	2.00	ft	
Heel Width	3.00	ft	
Footing Width	7.00	ft	
Design Section Width, bw	1.00	ft	
Section Weight	2,326	plf	

Note: For strip footings, Ped Height = 0 and Ped Width = Wing Panel Width

Material Properties

Soils			
Backfill Soil Unit Weight	0.140	kcf	
Backfill Soil Friction Angle, ϕf	34.00	deg	
Lateral Earth Pressure Coef, K	0.307		
Foundation-Footing Friction Coefficient	0.54		=0.8tan(34)
Factored Bearing Resistance	9.81	ksf	per contract plans sht 6, beff = 3.76
Concrete			
Concrete Unit Weight	0.150	kcf	
f'c	4.00	ksi	
Aggregate Diam	0.75	in	
Ec	3,644	ksi	AASHTO 5.4.2.4
$\beta 1$	0.85		AASHTO 5.7.2.2
Steel			
fy	60	ksi	
Es	29,000	ksi	
n (eta)	7.958		

beff	4	12	3.76
qR	10	16.5	9.805

Unfactored Wing Reactions

	Case	Force (k)	
Vertical	DC	2.057	WW4 Anchor 1, p13
	DW	0	
	EV	11.985	WW4 Anchor 1, p13
	EH	0.748	WW4 Anchor 1, p14
	LS	0	
	LL	0	
Horizontal	DC	0	
	DW	0	
	EV	0	
	EH	-2.526	WW4 Anchor 1, p14
	LS	0	
	LL	0	

Note: Positive forces are down and toward backfill

Load Factors

Case	Max	Min	Serv
DC	1.25	0.9	1
DW	1.5	0.65	1
EV	1.35	1	1
EH	1.5	0.9	1
LS	1.75	0	1
LL	1.75	0	1

Resistance Factors

Shear	0.9
Sliding	0.9
Bearing	0.45

Assumptions

-Case 1: Maximum Lateral Backfill Load Factor

Check Max and Min Vertical loads

Check With and Without Live Load

-Case 2: Minimum Lateral Backfill Load Factor

Check Max and Min Vertical loads

Check With and Without Live Load

-Allow passive backfill resistance? Yes 1

Case 1: Maximum Lateral Backfill Loads

Note: Positive Forces Are Down and Toward Backfill

Load Description	Dir	Case	Force (k)	Arm (ft)	Max Vert w/LL Factor	Max Vert w/LL F (k)	Max Vert w/LL M (k-ft)	Max Vert No LL Factor	Max Vert No LL F (k)	Max Vert No LL M (k-ft)	Min Vert w/LL Factor	Min Vert w/LL F (k)	Min Vert w/LL M (k-ft)	Min Vert No LL Factor	Min Vert No LL F (k)	Min Vert No LL M (k-ft)	Service Factor	Service F (k)	Service M (k-ft)
From Structure	V	DC	2.06	3.00	1.25	2.57	7.71	1.25	2.57	7.71	0.9	1.85	5.55	0.9	1.85	5.55	1	2.06	6.17
		DW	0.00	3.00	1.5	0.00	0.00	1.5	0.00	0.00	0.65	0.00	0.00	0.65	0.00	0.00	1	0.00	0.00
		EV	11.99	3.00	1.35	16.18	48.54	1.35	16.18	48.54	1	11.99	35.96	1	11.99	35.96	1	11.99	35.96
		EH	0.75	3.00	1.5	1.12	3.37	1.5	1.12	3.37	1.5	1.12	3.37	1.5	1.12	3.37	1	0.75	2.24
		LS	0.00	3.00	1.75	0.00	0.00	1.75	0.00	0.00	1.75	0.00	0.00	1.75	0.00	0.00	1	0.00	0.00
		LL	0.00	3.00	1.75	0.00	0.00	0	0.00	0.00	1.75	0.00	0.00	0	0.00	0.00	1	0.00	0.00
	H	DC	0.00	4.00	1.25	0.00	0.00	1.25	0.00	0.00	0.9	0.00	0.00	0.9	0.00	0.00	1	0.00	0.00
		DW	0.00	4.00	1.5	0.00	0.00	1.5	0.00	0.00	0.65	0.00	0.00	0.65	0.00	0.00	1	0.00	0.00
		EV	0.00	4.00	1.35	0.00	0.00	1.35	0.00	0.00	1	0.00	0.00	1	0.00	0.00	1	0.00	0.00
		EH	-2.53	4.00	1.5	-3.79	-15.17	1.5	-3.79	-15.17	1.5	-3.79	-15.17	1.5	-3.79	-15.17	1	-2.53	-10.11
		LS	0.00	4.00	1.75	0.00	0.00	1.75	0.00	0.00	1.75	0.00	0.00	1.75	0.00	0.00	1	0.00	0.00
		LL	0.00	4.00	1.75	0.00	0.00	0	0.00	0.00	1.75	0.00	0.00	0	0.00	0.00	1	0.00	0.00
EV heel	V	EV	1.05	5.50	1.35	1.42	7.81	1.35	1.42	7.81	1	1.05	5.78	1	1.05	5.78	1	1.05	5.78
EV ped	V	EV	0.00	3.71	1.35	0.00	0.00	1.35	0.00	0.00	1	0.00	0.00	1	0.00	0.00	1	0.00	0.00
DC foot	V	DC	1.58	3.50	1.25	1.97	6.89	1.25	1.97	6.89	0.9	1.42	4.96	0.9	1.42	4.96	1	1.58	5.51
DC pedestal	V	DC	0.75	3.00	1.25	0.94	2.82	1.25	0.94	2.82	0.9	0.68	2.03	0.9	0.68	2.03	1	0.75	2.25
LS footing	H	LS	0.00	2.00	1.75	0.00	0.00	1.75	0.00	0.00	1.75	0.00	0.00	1.75	0.00	0.00	1	0.00	0.00
EH ftg	H	EH	-0.34	1.33	1.5	-0.52	-0.69	1.5	-0.52	-0.69	1.5	-0.52	-0.69	1.5	-0.52	-0.69	1	-0.34	-0.46
EH overburden	H	EH	-2.34	2.00	1.5	-3.51	-7.02	1.5	-3.51	-7.02	1.5	-3.51	-7.02	1.5	-3.51	-7.02	1	-2.34	-4.68

Results

Driving Moments *(active behind)*			-22.88				-22.88				-22.88				-22.88				-15.26
Driving Moments *(passive behind)*			-100				-100				-100				-100				-66.69
Resisting Moments			77.13				77.13				57.65				57.65				57.92
Total Vertical		24.20	k			24.20	k			18.10	k			18.10	k			18.17	k
Location of Resultant *(active behind)*		2.24	ft			2.24	ft			1.92	ft			1.92	ft			2.35	ft
Location of Resultant *(passive Behind)*		-0.95	k-ft			-0.95	k-ft			-2.34	k-ft			-2.34	k-ft			-0.48	k-ft
Eccentricity,e (negative is toward heel)		1.26	ft			1.26	ft			1.58	ft			1.58	ft			1.15	ft
Check Allowable Eccentricity = b/4 =	**ok**	1.75	ft	**ok**		1.75	ft	**ok**		1.75	ft	**ok**		1.75	ft	**ok**		1.75	ft
Total Horizontal Load (positive is toward heel)		-7.82	k			-7.82	k			-7.82	k			-7.82	k			-5.21	k
Available Passive resistance		-40.27	ft			-40.27	ft			-40.27	ft			-40.27	ft			-26.84	ft
Check Sliding Resistance $= \phi * \tan(\delta) * \Sigma V$	**ok**	11.75	k	**ok**		11.75	k	**ok**		8.79	k	**ok**		8.79	k	**ok**		8.82	k
Effective Footing Width, beff		4.48	ft			4.48	ft			3.84	ft			3.84	ft			4.70	ft
Factored Bearing Resistance		9.81	ksf			9.81	ksf			9.81	ksf			9.81	ksf			9.81	ksf
Check Bearing Pressure $= \Sigma V / beff$	**ok**	5.40	ksf	**ok**		5.40	ksf	**ok**		4.71	ksf	**ok**		4.71	ksf	**ok**		3.87	ksf

Case 2: Minimum Lateral Backfill Loads

Note: Positive Forces Are Down and Toward Backfill

Load Description	Dir	Case	Force (k)	Arm (ft)	Max Vert w/LL Factor	Max Vert w/LL F (k)	Max Vert w/LL M (k-ft)	Max Vert No LL Factor	Max Vert No LL F (k)	Max Vert No LL M (k-ft)	Min Vert w/LL Factor	Min Vert w/LL F (k)	Min Vert w/LL M (k-ft)	Min Vert No LL Factor	Min Vert No LL F (k)	Min Vert No LL M (k-ft)	Service Factor	Service F (k)	Service M (k-ft)
From Structure	V	DC	2.06	3.00	1.25	2.57	7.71	1.25	2.57	7.71	0.9	1.85	5.55	0.9	1.85	5.55	1	2.06	6.17
		DW	0.00	3.00	1.5	0.00	0.00	1.5	0.00	0.00	0.65	0.00	0.00	0.65	0.00	0.00	1	0.00	0.00
		EV	11.99	3.00	1.35	16.18	48.54	1.35	16.18	48.54	1	11.99	35.96	1	11.99	35.96	1	11.99	35.96
		EH	0.75	3.00	0.9	0.67	2.02	0.9	0.67	2.02	0.9	0.67	2.02	0.9	0.67	2.02	1	0.75	2.24
		LS	0.00	3.00	0	0.00	0.00	0	0.00	0.00	0	0.00	0.00	0	0.00	0.00	1	0.00	0.00
		LL	0.00	3.00	1.75	0.00	0.00	0	0.00	0.00	1.75	0.00	0.00	0	0.00	0.00	1	0.00	0.00
	H	DC	0.00	4.00	1.25	0.00	0.00	1.25	0.00	0.00	0.9	0.00	0.00	0.9	0.00	0.00	1	0.00	0.00
		DW	0.00	4.00	1.5	0.00	0.00	1.5	0.00	0.00	0.65	0.00	0.00	0.65	0.00	0.00	1	0.00	0.00
		EV	0.00	4.00	1.35	0.00	0.00	1.35	0.00	0.00	1	0.00	0.00	1	0.00	0.00	1	0.00	0.00
		EH	-2.53	4.00	0.9	-2.27	-9.10	0.9	-2.27	-9.10	0.9	-2.27	-9.10	0.9	-2.27	-9.10	1	-2.53	-10.11
		LS	0.00	4.00	0	0.00	0.00	0	0.00	0.00	0	0.00	0.00	0	0.00	0.00	1	0.00	0.00
		LL	0.00	4.00	1.75	0.00	0.00	0	0.00	0.00	1.75	0.00	0.00	0	0.00	0.00	1	0.00	0.00
EV heel	V	EV	1.05	5.50	1.35	1.42	7.81	1.35	1.42	7.81	1	1.05	5.78	1	1.05	5.78	1	1.05	5.78
EV ped	V	EV	0.00	3.71	1.35	0.00	0.00	1.35	0.00	0.00	1	0.00	0.00	1	0.00	0.00	2	0.00	0.00
DC foot	V	DC	1.58	3.50	1.25	1.97	6.89	1.25	1.97	6.89	0.9	1.42	4.96	0.9	1.42	4.96	1	1.58	5.51
DC pedestal	V	DC	0.75	3.00	1.25	0.94	2.82	1.25	0.94	2.82	0.9	0.68	2.03	0.9	0.68	2.03	1	0.75	2.25
LS footing	H	LS	0.00	2.00	0	0.00	0.00	0	0.00	0.00	0	0.00	0.00	0	0.00	0.00	1	0.00	0.00
EH ftg	H	EH	-0.34	1.33	0.9	-0.31	-0.41	0.9	-0.31	-0.41	0.9	-0.31	-0.41	0.9	-0.31	-0.41	1	-0.34	-0.46
EH overburden	H	EH	-2.34	2.00	0.9	-2.11	-4.21	0.9	-2.11	-4.21	0.9	-2.11	-4.21	0.9	-2.11	-4.21	1	-2.34	-4.68

Results

Driving Moments (active behind)			-13.73				-13.73				-13.73				-13.73				-15.26
Driving Moments (passive behind)			-60.02				-60.02				-60.02				-60.02				-66.69
Resisting Moments			75.79				75.79				56.30				56.30				57.92
Total Vertical		23.75	k			23.75	k			17.65	k			17.65	k			18.17	k
Location of Resultant (active behind)		2.61	ft			2.61	ft			2.41	ft			2.41	ft			2.35	ft
Location of Resultant (passive Behind)		0.66	k-ft			0.66	k-ft			-0.21	k-ft			-0.21	k-ft			-0.48	k-ft
Eccentricity,e (negative is toward heel)		0.89	ft			0.89	ft			1.09	ft			1.09	ft			1.15	ft
Check Allowable Eccentricity = b/4 =	**ok**	1.75	ft	**ok**		1.75	ft	**ok**		1.75	ft	**ok**		1.75	ft	**ok**		1.75	ft
Total Horizontal Load (positive is toward heel)		-4.69	k			-4.69	k			-4.69	k			-4.69	k			-5.21	k
Available Passive resistance		-24.16	ft			-24.16	ft			-24.16	ft			-24.16	ft			-26.84	ft
Check Sliding Resistance $= \phi * \tan(\delta) * \Sigma V$	**ok**	11.53	k	**ok**		11.53	k	**ok**		8.57	k	**ok**		8.57	k	**ok**		8.82	k
Effective Footing Width, beff		5.23	ft			5.23	ft			4.82	ft			4.82	ft			4.70	ft
Factored Bearing Resistance		9.81	ksf			9.81	ksf			9.81	ksf			9.81	ksf			9.81	ksf
Check Bearing Pressure $= \Sigma V / beff$	**ok**	4.55	ksf	**ok**		4.55	ksf	**ok**		3.66	ksf	**ok**		3.66	ksf	**ok**		3.87	ksf

Pedestal Design Forces: Case 1 Maximum Lateral Backfill Loads

Note: Positive Forces Are Toward Backfill

Load Description	Dir	Case	Force (k)	Arm (ft)	Max Vert w/LL Factor	Max Vert w/LL F (k)	Max Vert w/LL M (k-ft)	Max Vert No LL Factor	Max Vert No LL F (k)	Max Vert No LL M (k-ft)	Min Vert w/LL Factor	Min Vert w/LL F (k)	Min Vert w/LL M (k-ft)	Min Vert No LL Factor	Min Vert No LL F (k)	Min Vert No LL M (k-ft)	Service Factor	Service F (k)	Service M (k-ft)
From Structure	H	DC	0.00	2.50	1.25	0.00	0.00	1.25	0.00	0.00	0.9	0.00	0.00	0.9	0.00	0.00	1	0.00	0.00
		DW	0.00	2.50	1.5	0.00	0.00	1.5	0.00	0.00	0.65	0.00	0.00	0.65	0.00	0.00	1	0.00	0.00
		EV	0.00	2.50	1.35	0.00	0.00	1.35	0.00	0.00	1	0.00	0.00	1	0.00	0.00	1	0.00	0.00
		EH	-2.53	2.50	1.5	-3.79	-9.49	1.5	-3.79	-9.49	1.5	-3.79	-9.49	1.5	-3.79	-9.49	1	-2.53	-6.32
		LS	0.00	2.50	1.75	0.00	0.00	1.75	0.00	0.00	1.75	0.00	0.00	1.75	0.00	0.00	1	0.00	0.00
		LL	0.00	2.50	1.75	0.00	0.00	0	0.00	0.00	1.75	0.00	0.00	0	0.00	0.00	0	0.00	0.00
LS footing	H	LS	0.00	1.25	1.75	0.00	0.00	1.75	0.00	0.00	1.75	0.00	0.00	1.75	0.00	0.00	1	0.00	0.00
EH ftg	H	EH	-0.13	0.83	1.5	-0.20	-0.17	1.5	-0.20	-0.17	1.5	-0.20	-0.17	1.5	-0.20	-0.17	1	-0.13	-0.11
EH overburden	H	EH	-1.46	1.25	1.5	-2.19	-2.75	1.5	-2.19	-2.75	1.5	-2.19	-2.75	1.5	-2.19	-2.75	1	-1.46	-1.83
				Totals		-6.19	-12.40		-6.19	-12.40		-6.19	-12.40		-6.19	-12.40		-4.12	-8.27

Ped Results: Case 1	Max	Min
Mu	-12.40	-12.40
Vu	-6.19	-6.19
Ms	-8.27	

Notes:

Positive Values indicates tension on toe face. Use for Toe Face design

Negative Values indicates tension on heel face. Use for Heel Face design

Footing Design Forces: Case 1 Maximum Lateral Backfill Loads

Note: Positive Forces Are Down

	Max Vert w/LL Factor	Max Vert w/LL Load	Max Vert No LL Factor	Max Vert No LL Load	Min Vert w/LL Factor	Min Vert w/LL Load	Min Vert No LL Factor	Min Vert No LL Load	Service Factor	Service Load
Total Vertical Load		24.20 k		24.20 k		18.10 k		18.10 k		18.17 k
Eccentricity, e (negative is toward heel)		1.26 ft		1.26 ft		1.58 ft		1.58 ft		1.15 ft
Note: Bearing Pressure for Structural Design to be trapezoidal per 10.6.5:		*B/6 = 1.167*								
Bearing Pressure @ Heel (AASHTO 11.6.3.2)		0 ksf		0 ksf		0 ksf		0 ksf		-0.033 ksf
Bearing Pressure @ Toe (AASHTO 11.6.3.2)		-7.197 ksf		-7.197 ksf		-6.285 ksf		-6.285 ksf		-5.157 ksf
Bearing Pressure @ Toe Face of Pedestal		-5.141 ksf		-5.141 ksf		-4.489 ksf		-4.489 ksf		-3.693 ksf
Bearing Pressure @ Heel face of Pedestal		-3.084 ksf		-3.084 ksf		-2.694 ksf		-2.694 ksf		-2.229 ksf
DC Toe	1.25	0.5625 k	1.25	0.5625 k	0.90	0.405 k	0.90	0.405 k	1	0.45 k
Upward Moment @ Toe face of Pedestal		-16.57 k-ft		-16.57 k-ft		-14.56 k-ft		-14.56 k-ft		-11.82 k-ft
Upward Shear @ Toe face of Pedestal		-11.77 k		-11.77 k		-10.37 k		-10.37 k		-8.401 k
DC Heel	1.25	0.8438 k	1.25	0.8438 k	0.90	0.6075 k	0.90	0.6075 k	1	0.675 k
EV Heel	1.35	6.76 k	1.35	6.76 k	1.00	6.76 k	1.00	6.76 k	1	6.76 k
Net Moment @ Heel face of Pedestal		6.7741 k-ft		6.7741 k-ft		7.006 k-ft		7.006 k-ft		7.7036 k-ft
Net Shear @ Heel face of Pedestal		2.9739 k		2.9739 k		3.3239 k		3.3239 k		4.0377 k

Downward Only Moment @ Heel face of Pedestal (per 11.6.1.2)		11.401	k-ft		11.401	k-ft		11.046	k-ft		11.046	k-ft		11.148	k-ft
Downward Only Shear @ Heel face of Pedestal (per 11.6.1.2)		7.60	k		7.60	k		7.36	k		7.36	k		7.43	k

Ftg Heel Face Results: Case 1	Max	Min
Mu	11.40	6.7741
Vu	7.60	2.9739
Ms	11.15	7.7036

Ftg Toe Face Results: Case 1	Min
Mu	-16.57
Vu	-11.77
Ms	-11.82

Note: Positive Values indicate tension on top of footing

Pedestal Design Forces: Case 2 Minimum Lateral Backfill Loads

Note: Positive Forces Are Toward Backfill

Load Description	Dir	Case	Force (k)	Arm (ft)	Max Vert w/LL Factor	Max Vert w/LL F (k)	Max Vert w/LL M (k-ft)	Max Vert No LL Factor	Max Vert No LL F (k)	Max Vert No LL M (k-ft)	Min Vert w/LL Factor	Min Vert w/LL F (k)	Min Vert w/LL M (k-ft)	Min Vert No LL Factor	Min Vert No LL F (k)	Min Vert No LL M (k-ft)	Service Factor	Service F (k)	Service M (k-ft)
From Structure	H	DC	0.00	2.50	1.25	0.00	0.00	1.25	0.00	0.00	0.9	0.00	0.00	0.9	0.00	0.00	1	0.00	0.00
		DW	0.00	2.50	1.5	0.00	0.00	1.5	0.00	0.00	0.65	0.00	0.00	0.65	0.00	0.00	1	0.00	0.00
		EV	0.00	2.50	1.35	0.00	0.00	1.35	0.00	0.00	1	0.00	0.00	1	0.00	0.00	1	0.00	0.00
		EH	-2.53	2.50	0.9	-2.27	-5.69	0.9	-2.27	-5.69	0.9	-2.27	-5.69	0.9	-2.27	-5.69	0.5	-1.26	-3.16
		LS	0.00	2.50	0	0.00	0.00	0	0.00	0.00	0	0.00	0.00	0	0.00	0.00	0	0.00	0.00
		LL	0.00	2.50	1.75	0.00	0.00	0	0.00	0.00	1.75	0.00	0.00	0	0.00	0.00	1	0.00	0.00
LS footing	H	LS	0.00	1.25	0	0.00	0.00	0	0.00	0.00	0	0.00	0.00	0	0.00	0.00	0.5	0.00	0.00
EH ftg	H	EH	-0.13	0.83	0.9	-0.12	-0.10	0.9	-0.12	-0.10	0.9	-0.12	-0.10	0.9	-0.12	-0.10	0.5	-0.07	-0.06
EH overburden	H	EH	-1.46	1.25	0.9	-1.32	-1.65	0.9	-1.32	-1.65	0.9	-1.32	-1.65	0.9	-1.32	-1.65	0.5	-0.73	-0.92
				Totals		-3.71	-7.44		-3.71	-7.44		-3.71	-7.44		-3.71	-7.44		-2.06	-4.13

Ped Results: Case 2	Max	Min
Mu	-7.44	-7.44
Vu	-3.71	-3.71
Ms	-4.13	

Notes:
Positive Values indicates tension on toe face. Use for Toe Face design
Negative Values indicates tension on heel face. Use for Heel Face design

Footing Design Forces: Case 2 Minimum Lateral Backfill Loads

Note: Positive Forces Are Down

	Max Vert w/LL Factor	Max Vert w/LL Load	Max Vert No LL Factor	Max Vert No LL Load	Min Vert w/LL Factor	Min Vert w/LL Load	Min Vert No LL Factor	Min Vert No LL Load	Service Factor	Service Load
Total Vertical Load		23.75 k		23.75 k		17.65 k		17.65 k		18.17 k
Eccentricity, e (negative is toward heel)		0.89 ft		0.89 ft		1.09 ft		1.09 ft		1.15 ft
Note: Bearing Pressure for Structural Design to be trapezoidal per 10.6.5:		*B/6 = 1.167*								
Bearing Pressure @ Heel (AASHTO 11.6.3.2)		-0.813 ksf		-0.813 ksf		-0.169 ksf		-0.169 ksf		-0.033 ksf
Bearing Pressure @ Toe (AASHTO 11.6.3.2)		-5.973 ksf		-5.973 ksf		-4.875 ksf		-4.875 ksf		-5.157 ksf
Bearing Pressure @ Toe Face of Pedestal		-4.499 ksf		-4.499 ksf		-3.531 ksf		-3.531 ksf		-3.693 ksf
Bearing Pressure @ Heel face of Pedestal		-3.024 ksf		-3.024 ksf		-2.186 ksf		-2.186 ksf		-2.229 ksf
DC Toe	1.25	0.5625 k	1.25	0.5625 k	0.90	0.405 k	0.90	0.405 k	1	0.45 k
Upward Moment @ Toe face of Pedestal		-13.35 k-ft		-13.35 k-ft		-11.14 k-ft		-11.14 k-ft		-11.82 k-ft
Upward Shear @ Toe face of Pedestal		-9.91 k		-9.91 k		-8.001 k		-8.001 k		-8.401 k
DC Heel	1.25	0.8438 k	1.25	0.8438 k	0.90	0.6075 k	0.90	0.6075 k	1	0.675 k
EV Heel	1.35	6.76 k	1.35	6.76 k	1.00	6.76 k	1.00	6.76 k	1	6.76 k
Net Moment @ Heel face of Pedestal		4.426 k-ft		4.426 k-ft		7.2618 k-ft		7.2618 k-ft		7.7036 k-ft
Net Shear @ Heel face of Pedestal		1.8448 k		1.8448 k		3.8325 k		3.8325 k		4.0377 k

Downward Only Moment @ Heel face of Pedestal (per 11.6.1.2)		11.40 k-ft		11.40 k-ft		11.05 k-ft		11.05 k-ft		11.15 k-ft
Downward Only Shear @ Heel face of Pedestal (per 11.6.1.2)		7.60 k		7.60 k		7.36 k		7.36 k		7.43 k

Ftg Heel Face Results: Case 2	Max	Min
Mu	11.40	4.426
Vu	7.60	1.8448
Ms	11.15	7.7036

Ftg Toe Face Results: Case 2	Min
Mu	-13.35
Vu	-9.91
Ms	-11.82

Note: Positive Values indicate tension on top of footing

Pedestal Structural Design Results

Pedestal Results	Max	Min
Mu	-7.44	-12.40
Vu	-3.71	-6.19
Ms	-4.13	-8.27

Notes:
Positive Values indicates tension on toe face. Use for Toe Face design
Negative Values indicates tension on heel face. Use for Heel Face design

Pedestal Heel Face Rebar Layout

Bar	# 5	Space	10 in	Diam	0.63 in	As	0.3682 in^2	Cover	2 in

Check Moment Resistance

d = $t_{ped} - cover - \frac{diam}{2} =$	21.6875 in	
c $= \frac{A_s F_y}{0.85 f'_c \beta_1 b_w} =$	0.63695 in	
Per AASHTO 5.7.3.2, fy may be substituted for fs when c/d <0.60:		
c/d =	0.02937	**ok**
a = β1*c =	0.5414 in	
$\phi_{moment} = 0.75 \le 0.65 + 0.15(\frac{d}{c} - 1) \le 0.9$	0.9	per 5.5.4.2.1
Mr $= \phi_{moment} A_s f_y \left(d - \frac{a}{2}\right) =$	35.4812 kip-ft	
Mu	-12.40 kip-ft	**ok**

Check Minimum Flexural Reinforcing (5.7.3.3.2)

fr $= 0.24\sqrt{f'_c} =$	0.48 ksi	
I_g $= \frac{1}{12} b_w t_{ped}^3 =$	13824 in^4	
y_t $= \frac{1}{2} t_{ped} =$	12 in	

$\gamma_3 =$ 0.67 $\gamma_1 =$ 1.2

Check Crack Control (5.7.3.4)

$\rho = \frac{A_s}{b_w d} =$	0.0014	
k $= \sqrt{2\rho\eta + (\rho\eta)^2} - \rho\eta =$	0.1392	
j $= 1 - \frac{k}{3} =$	0.9536	
Ms	-8.27	
$fss = \frac{M_s}{A_s j d} =$	13.029 ksi	
d_c $= t - d =$	2.3125 in	
βs $= 1 + \frac{d_c}{0.7(t - d_c)} =$	1.1523	
γ_e =	0.75	
s_max $= \frac{700\gamma_e}{\beta_s f_{ss} b_w} - 2d_c =$	30.3 in	**ok**

Check Shear Resistance (5.8.3.3)

d_v $= \max(0.72t, 0.9d)$	19.519 in
β	2
Vr $= \phi_{shear} 0.0316 \beta \sqrt{f'_c} b_w d_v =$	26.645 k

Mcr $= \gamma_3 \gamma_1 f_r \frac{I_g}{y_t} =$	37.0483 k-ft	
1.33Mu =	16.4928 k-ft	
Check Mr > min(1.33Mu,Mcr)	35.4812 k-ft	**ok**

Pedestal Toe Face Rebar Layout

Bar	# 5	Space	10 in	Diam	0.63 in	As	0.3682 in^2	Cover	2 in

Check Moment Resistance

d = $t_{ped} - cover - \frac{diam}{2} =$	21.6875 in	
c $= \frac{A_s F_y}{0.85 f'_c \beta_1 b_w} =$	0.63695 in	

Per AASHTO 5.7.3.2, fy may be substituted for fs when c/d <0.60:

c/d =	0.02937	**ok**
a = β1*c =	0.5414 in	
$\phi_{moment} = 0.75 \le 0.65 + 0.15(\frac{d}{c} - 1) \le 0.9$	0.9	per 5.5.4.2.1
Mr $= \phi_{moment} A_s f_y \left(d - \frac{a}{2}\right) =$	35.4812 kip-ft	
Mu	0.00 kip-ft	**ok**

Check Minimum Flexural Reinforcing (5.7.3.3.2)

fr $= 0.24\sqrt{f'_c} =$	0.48 ksi	
I_g $= \frac{1}{12} b_w t_{ped}{}^3 =$	13824 in^4	
y_t $= \frac{1}{2} t_{ped} =$	12 in	

$\gamma_3 =$ 0.67 $\gamma_1 =$ 1.2

Mcr $= \gamma_3 \gamma_1 f_r \frac{I_g}{y_t} =$	37.0483 k-ft	
1.33Mu =	0 k-ft	

Vu	-6.19 k	**ok**

Note: Per 5.10.8, Footings are exempt from temperature/shrinkage steel requirements

Check Crack Control (5.7.3.4)

$\rho = \frac{A_s}{b_w d} =$	0.0014	
k $= \sqrt{2\rho\eta + (\rho\eta)^2} - \rho\eta =$	0.1392	
j $= 1 - \frac{k}{3} =$	0.9536	
Ms	0.00	
$fss = \frac{M_s}{A_s j d} =$	0 ksi	
d_c $= t - d =$	2.3125 in	
βs $= 1 + \frac{d_c}{0.7(t - d_c)} =$	1.1523	
γ_e =	0.75	
s_max $= \frac{700\gamma_e}{\beta_s f_{ss} b_w} - 2d_c =$	#DIV/0! in	**#DIV/0!**

Check Shear Resistance (5.8.3.3)

d_v $= \max(0.72t, 0.9d)$	19.519	
β	2	
Vr $= \phi_{shear} 0.0316 \beta \sqrt{f'_c} b_w d_v =$	26.645 k	
Vu	0.00 k	**ok**

Note: Per 5.10.8, Footings are exempt from temperature/shrinkage steel requirements

Check Mr > min(1.33Mu,Mcr)	35.4812 k-ft	**ok**

Footing Btm Face - Structural Design

Btm Face Results	Heel	Toe
Mu	4.43	-16.57
Vu	1.84	-11.77
Ms	7.70	-11.82

Notes:
Positive Values indicates tension on top face
Negative Values indicates tension on btm face

Footing Btm Face Rebar Layout

Bar	# 5	Space	10 in	Diam	0.63 in	As	0.3682 in^2	Cover	2 in

Check Moment Resistance

d = $t_{foot} - cover - \frac{diam}{2} =$	15.6875 in	
c $= \frac{A_s F_y}{0.85 f'_c \beta_1 b_w} =$	0.63695 in	

Per AASHTO 5.7.3.2, fy may be substituted for fs when c/d <0.60:

c/d =	0.0406	**ok**
a = $\beta 1$*c =	0.5414 in	
$\phi_{moment} = 0.75 \le 0.65 + 0.15(\frac{d}{c} - 1) \le 0.9$	0.9	per 5.5.4.2.1
Mr $= \phi_{moment} A_s f_y \left(d - \frac{a}{2}\right) =$	25.541 kip-ft	
Mu	-16.57 kip-ft	**ok**

Check Minimum Flexural Reinforcing (5.7.3.3.2)

fr $= 0.24\sqrt{f'_c} =$	0.48 ksi	
I_g $= \frac{1}{12} b_w t_{foot}^3 =$	5832 in^4	
y_t $= \frac{1}{2} t_{foot} =$	9 in	

$\gamma_3 =$ 0.67 $\gamma_1 =$ 1.2

Mcr $= \gamma_3 \gamma_1 f_r \frac{I_g}{y_t} =$	20.8397 k-ft	
1.33Mu =	22.0419 k-ft	
Check Mr > min(1.33Mu,Mcr)	25.541 k-ft	**ok**

Check Crack Control (5.7.3.4)

$\rho = \frac{A_s}{b_w d} =$	0.002	
k $= \sqrt{2\rho\eta + (\rho\eta)^2} - \rho\eta =$	0.1615	
j $= 1 - \frac{k}{3} =$	0.9462	
Ms	-11.82	
$fss = \frac{M_s}{A_s j d} =$	25.95 ksi	
d_c $= t - d =$	2.3125 in	
βs $= 1 + \frac{d_c}{0.7(t - d_c)} =$	1.2106	
γ_e =	0.75	
s_max $= \frac{700\gamma_e}{\beta_s f_{ss} b_w} - 2d_c =$	12.1 in	**ok**

Check Shear Resistance (5.8.3.3)

d_v $= \max(0.72t, 0.9d)$	14.119	
β	2	
Vr $= \phi_{shear} 0.0316 \beta \sqrt{f'_c} b_w d_v =$	19.274 k	
Vu	-11.77 k	**ok**

Note: Per 5.10.8, Footings are exempt from temperature/shrinkage steel requirements

Footing Top Face - Structural Design

Top Face Results	Heel
Mu	11.40
Vu	7.60
Ms	11.15

Notes:
Positive Values indicates tension on top face
Negative Values indicates tension on btm face

Footing Top Face Rebar Layout

Bar # 5 | Space 10 in | Diam 0.63 in | As 0.3682 in^2 | Cover 2 in

Check Moment Resistance

d = $t_{foot} - cover - \frac{diam}{2} =$	15.6875 in	
c $= \frac{A_s F_y}{0.85 f'_c \beta_1 b_w} =$	0.63695 in	
Per AASHTO 5.7.3.2, fy may be substituted for fs when c/d <0.60:		
c/d =	0.0406	**ok**
a = β1*c =	0.5414 in	
$\phi_{moment} = 0.75 \le 0.65 + 0.15(\frac{d}{c} - 1) \le 0.9$	0.9	per 5.5.4.2.1
Mr $= \phi_{moment} A_s f_y \left(d - \frac{a}{2}\right) =$	25.541 kip-ft	
Mu	11.40 kip-ft	**ok**

Check Minimum Flexural Reinforcing (5.7.3.3.2)

fr $= 0.24\sqrt{f'_c} =$	0.48 ksi	
I_g $= \frac{1}{12} b_w t_{foot}^3 =$	5832 in^4	
y_t $= \frac{1}{2} t_{foot} =$	9 in	
γ_3 = 0.67 γ_1 = 1.2		
Mcr $= \gamma_3 \gamma_1 f_r \frac{I_g}{y_t} =$	20.8397 k-ft	
1.33Mu =	15.1629 k-ft	
Check Mr > min(1.33Mu,Mcr)	25.541 k-ft	**ok**

Check Crack Control (5.7.3.4)

$\rho = \frac{A_s}{b_w d} =$	0.002	
k $= \sqrt{2\rho\eta + (\rho\eta)^2} - \rho\eta =$	0.1615	
j $= 1 - \frac{k}{3} =$	0.9462	
Ms	11.15	
$fss = \frac{M_s}{A_s j d} =$	24.48 ksi	
d_c $= t - d =$	2.3125 in	
βs $= 1 + \frac{d_c}{0.7(t - d_c)} =$	1.2106	
γ_e =	0.75	
s_max $= \frac{700\gamma_e}{\beta_s f_{ss} b_w} - 2d_c =$	13.1 in	**ok**

Check Shear Resistance (5.8.3.3)

d_v $= \max(0.72t, 0.9d)$	14.119	
β	2	
Vr $= \phi_{shear} 0.0316 \beta \sqrt{f'_c} b_w d_v =$	19.274 k	
Vu	7.60 k	**ok**

Note: Per 5.10.8, Footings are exempt from temperature/shrinkage steel requirements

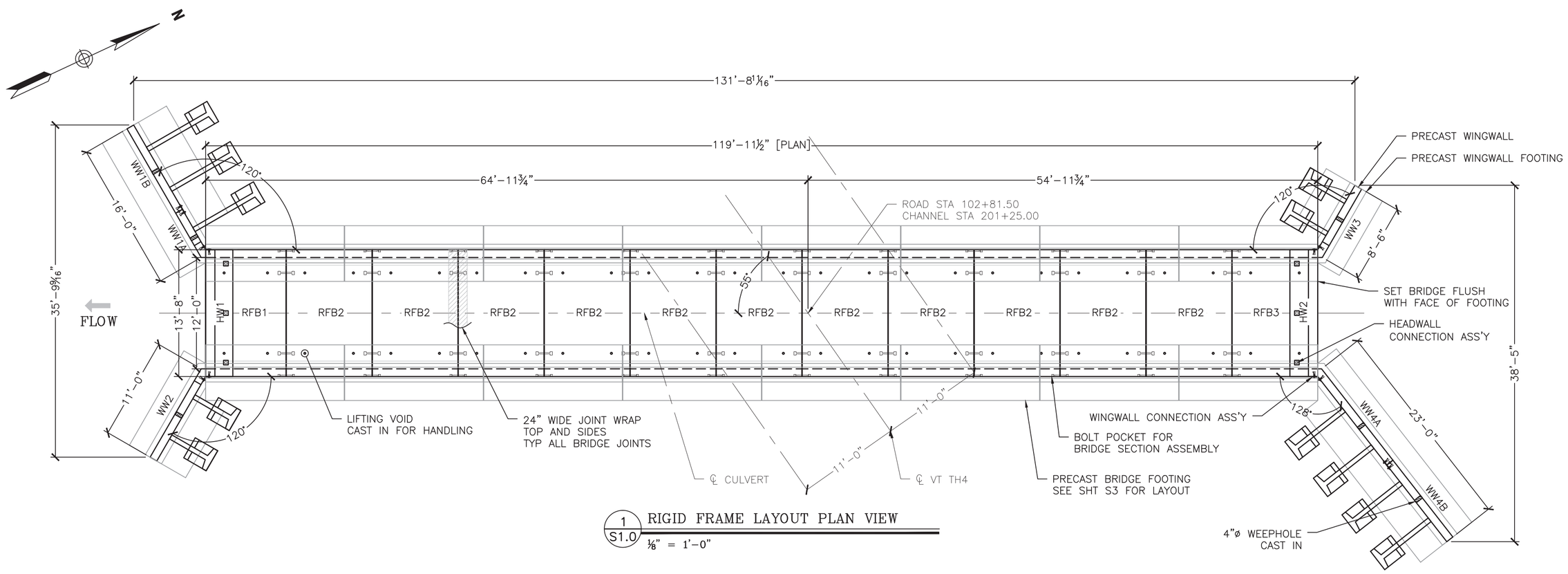

1 S1.0 RIGID FRAME LAYOUT PLAN VIEW

⅛" = 1'–0"

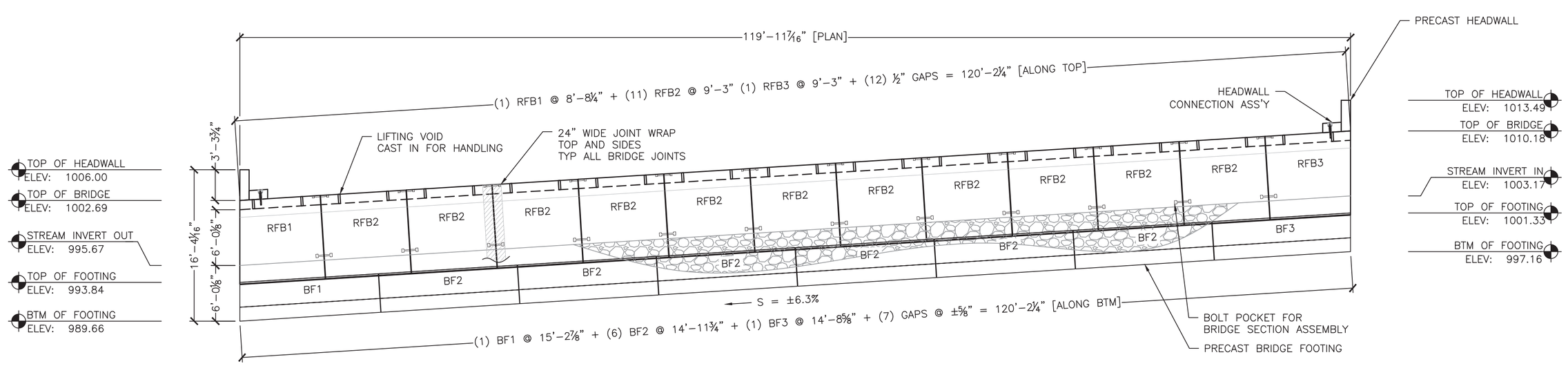

2 S1.0 RIGID FRAME PROFILE VIEW

⅛" = 1'–0"

NOTE:
WINGWALLS NOT SHOWN IN THIS VIEW FOR CLARITY

BILL OF MATERIALS

QTY	DESCRIPTION	IN STOCK
	ITEMS CAST-IN	
114	5-TON UTILITY ANCHORS	
4	RL-4 8TON TECH ANCHORS	
28	1-8NC 6X6 DOUBLE WINGWALL ANCHORS	
6	4" PVC X 10"L SLEEVES	
6	6" X 6" X 4" POCKET	
6	3" PVC X 8" LONG	
6	MB CX-51 COIL THREAD INSERT	
	ITEMS FOR PRE-SHIPMENT PREPARATION	
600LF	1" NEOPRENE (25LF/ROLL)	
2 GAL	RED ADHESIVE (250 SF/GAL)	
	ITEMS TO SHIP TO THE JOB	
380LF	ROYSTON AHT104 24" WIDE JOINT WRAP (50LF/ROLL)	
4 GAL	ROYBOND 740 ADHESIVE PRIMER (2 ROLLS/GAL)	
4	180DEG 1/2" X 10" X 14" GALV BRACKET	
6	120DEG 1/2" X 10" X 14" GALV BRACKET	
3	128DEG 1" X 10" X 14" GALV BRACKET	
64	1" X 5" GALV ROD WITH PLATE WASHER AND NUT	
6	1" X 13.5" GALV COIL ROD WITH HD NUT AND PLATE WASHER	
18	#6 X 16"L DOWEL	
78	7/8" X 18" GALV ROD W/ 2 NUTS & 4 WASHERS	
204	1/4" SHIMS	

GENERAL NOTES:

1. THE PLANS ARE INTENDED TO BE DRAWN TO SCALE. HOWEVER, IF A CRITICAL DIMENSION IS NOT PROVIDED, MICHIE CORPORATION SHOULD BE CONTACTED FOR VERIFICATION.

2. IF ANY OF THE WORK TO BE DONE AS SHOWN ON THE DRAWINGS DOES NOT CORRESPOND WITH THE EXISTING FIELD CONDITIONS, CONTACT THE ENGINEER PRIOR TO PROCEEDING WITH THE WORK IN QUESTION.

3. FIELD–VERIFY ALL ELEVATIONS PRIOR TO THE START OF CONSTRUCTION. IF THERE ARE ANY DISCREPANCIES, CONSULT THE ENGINEER PRIOR TO PROCEEDING WITH THE WORK IN QUESTION.

4. MAINTAIN MINIMUM 60 DEGREE SLING ANGLE WHEN HANDLING PRECAST COMPONENTS.

5. PRECAST COMPONENTS SHALL REACH A MINIMUM COMPRESSIVE STRENGTH OF 3,000 PSI PRIOR TO STRIPPING, AND THE MINIMUM DESIGN COMPRESSIVE STRENGTH PRIOR TO SHIPPING, UNLESS OTHERWISE DIRECTED BY THE ENGINEER.

6. ALL JOINTS AND VOIDS SHALL BE FILLED WITH NON–SHRINK GROUT. VERTICAL SURFACE VOIDS MAY BE FILLED WITH FOAM SEALANT.

7. SHOP DRAWINGS WERE DEVELOPED USING THE FOLLOWING RESOURCES FOR THE CONTRACT:
- "PROPOSED IMPROVEMENT BRIDGE PROJECT, TOWN OF SHREWSBURY, COUNT OF RUTLAND, TH4, BR 37, VTAOT PROJECT # STP 1443 (44)," SHEETS 1–36 OF 36 BY VTAOT, DATED 5–22–14

8. IF THERE IS ADDITIONAL INFORMATION PERTINENT TO THE FABRICATION AND INSTALLATION OF THESE UNITS THAT IS NOT CONTAINED WITHIN THE RESOURCES LISTED ABOVE IT SHALL BEBROUGHT TO THE ATTENTION OF MICHIE CORPORATION. FAILURE TO MAKE SUCH ADDITIONAL INFORMATION AVAILABLE SHALL RELIEVE MICHIE CORPORATION OF ALL LIABILITIES ARISING FROM ERRORS OR OMISSIONS RELATED TO THE OMITTED INFORMATION.

THREE SIDED RIGID FRAME NOTES:

1. THREE SIDED RIGID FRAME SECTIONS ARE DESIGNED IN ACCORDANCE WITH
- AASHTO "LRFD BRIDGE DESIGN SPECIFICATIONS", 6TH EDITION.
- VTRANS 2011 "STANDARD SPECIFICATIONS FOR CONSTRUCTION".

2. THE FOLLOWING CRITERIA WAS USED FOR DESIGN:
- LIVE LOAD: AASHTO HL–93
- EARTH COVER: 14–16 FEET
- BACKFILL SOIL UNIT WEIGHT: 140 PCF
- MINIMUM LATERAL EARTH PRESSURE: 35 PSF
- MAXIMUM LATERAL EARTH PRESSURE: 70 PSF
- CONCRETE STRENGTH: 5,000 PSI
- STEEL YIELD STRENGTH: 60,000 PSI

3. RIGID FRAME CONCRETE SHALL BE SELF–CONSOLIDATING CONFORMING TO ASTM C260 WITH A MINIMUM 28–DAY COMPRESSIVE STRENGTH OF 5,000 PSI, MICHIE MIX DESIGN 1953CAS. AGGREGATE SHALL CONFORM TO ASTM C–33 WITH A MAXIMUM DIAMETER OF 3/4". CEMENT SHALL CONFORM TO ASTM C150.

4. REINFORCING SHALL BE GRADE 60 DEFORMED BLACK BARS CONFORMING TO ASTM A–615. ALL BARS SHALL BE BENT COLD.

5. ALL EXPOSED EDGES EXCEPT WHERE NOTED SHALL BE CHAMFERED 1".

6. EXPOSED SURFACES SHALL BE COATED WITH VTRANS APPROVED WATER REPELLENT (SUPPLIED AND APPLIED BY OTHERS).

7. EACH SECTION SHALL BE PROVIDED WITH BOLT POCKETS FOR ATTACHMENT TO ADJACENT SECTIONS. 7/8" DIA. GALV. THREADED ROD, WASHERS AND NUTS SHALL BE PROVIDED FOR ASSEMBLY IN THE FIELD. CLOSED–CELL NEOPRENE JOINT SEALANT SHALL BE USED IN ALL JOINTS.

8. 2FT WIDE ROYSTON JOINT WRAP WITH ADHESIVE PROVIDED BY MICHIE CORP, INSTALLED BY OTHERS, CENTER ON JOINT AFTER GROUTING. INSTALL PER VTRANS SPECIFICATIONS.

HEADWALL NOTES:

1. HEADWALL CONCRETE SHALL BE SELF–CONSOLIDATING CONFORMING TO ASTM C260 WITH A MINIMUM 28–DAY COMPRESSIVE STRENGTH OF 5,000 PSI, MICHIE MIX DESIGN 1953CAS. AGGREGATE SHALL CONFORM TO ASTM C–33 WITH A MAXIMUM DIAMETER OF 3/4". CEMENT SHALL CONFORM TO ASTM C150.

2. REINFORCING SHALL BE GRADE 60 DEFORMED BLACK BARS CONFORMING TO ASTM A–615. ALL BARS SHALL BE BENT COLD.

3. ALL EXPOSED EDGES EXCEPT WHERE NOTED SHALL BE CHAMFERED 1".

4. EXPOSED SURFACES SHALL BE COATED WITH VTRANS APPROVED WATER REPELLENT (SUPPLIED AND APPLIED BY OTHERS).

PRECAST CONCRETE FOOTING NOTES:

1. FOOTING SECTIONS ARE DESIGNED IN ACCORDANCE WITH
- AASHTO "LRFD BRIDGE DESIGN SPECIFICATIONS", 6TH EDITION.
- VTRANS 2011 "STANDARD SPECIFICATIONS FOR CONSTRUCTION".

2. THE FOLLOWING CRITERIA WAS USED FOR DESIGN:
- BACKFILL SOIL UNIT WEIGHT: 140 PCF
- BACKFILL SOIL FRICTION ANGLE: 34 DEG
- CONCRETE STRENGTH: 5,000 PSI
- STEEL YIELD STRENGTH: 60,000 PSI
- FACTORED BEARING RESISTANCE: VARIES BY EFFECTIVE WIDTH, PER NOTE 3 SHEET 6.

3. FOOTING CONCRETE SHALL BE SELF–CONSOLIDATING CONFORMING TO ASTM C260 WITH A MINIMUM 28–DAY COMPRESSIVE STRENGTH OF 5,000 PSI, MICHIE MIX DESIGN 1953CAS. AGGREGATE SHALL CONFORM TO ASTM C–33 WITH A MAXIMUM DIAMETER OF 3/4". CEMENT SHALL CONFORM TO ASTM C150.

4. UNLESS NOTED OTHERWISE, REINFORCING SHALL BE GRADE 60 DEFORMED BLACK BARS CONFORMING TO ASTM A–615. ALL BARS SHALL BE BENT COLD.

5. ALL EXPOSED EDGES EXCEPT WHERE NOTED SHALL BE CHAMFERED 1".

6. EACH FOOTING SECTION SHALL BE PROVIDED WITH BOLT POCKETS FOR ATTACHMENT TO ADJACENT SECTIONS. 7/8" DIA. GALV. THREADED ROD, WASHERS AND NUTS SHALL BE PROVIDED FOR ASSEMBLY IN THE FIELD. CLOSED–CELL NEOPRENE JOINT SEALANT SHALL BE USED IN ALL JOINTS. FILL KEY WAY WITH NON–SHRINK GROUT PRIOR TO ERECTION OF BRIDGE UNITS. FILL TROUGH WITH NON–SHRINK GROUT AFTER SETTING BRIDGE UNITS.

WING WALL NOTES:

1. SECTIONS ARE DESIGNED IN ACCORDANCE WITH
- AASHTO "LRFD BRIDGE DESIGN SPECIFICATIONS", 6TH EDITION
- VTRANS 2011 "STANDARD SPECIFICATIONS FOR CONSTRUCTION".

2. THE FOLLOWING SOIL PROPERTIES WERE USED IN THE DESIGN:

	SOIL WEIGHT [PCF]	FRICTION ANGLE [DEG]
• RETAINED SOIL	140	34
• FOUNDATION SOIL	130	36

- LIVE LOAD SURCHARGE = NONE
- BACKSLOPE ANGLE: VARIES, SEE DESIGN
  FACTORED BEARING RESISTANCE = 10.0 KSF (STRENGTH LIMIT STATE) PER NOTE 3 SHEET 6.

3. CONCRETE SHALL BE SELF–CONSOLIDATING CONFORMING TO ASTM C260 WITH A MINIMUM 28–DAY COMPRESSIVE STRENGTH OF 5,000 PSI, MICHIE MIX DESIGN 1953CAS. AGGREGATE SHALL CONFORM TO ASTM C–33 WITH A MAXIMUM DIAMETER OF 3/4". CEMENT SHALL CONFORM TO ASTM C150.

4. REINFORCING SHALL BE GRADE 60 DEFORMED BLACK BARS CONFORMING TO ASTM A–615. ALL BARS SHALL BE BENT COLD.

5. ALL EXPOSED EDGES EXCEPT WHERE NOTED SHALL BE CHAMFERED 1".

6. ALL EXPOSED EDGES OF CONCRETE SHALL BE COATED WITH A VTRANS APPROVED WATER REPELLANT (SUPPLIED AND APPLIED BY OTHERS).

SHEET LIST

S1.0 – LAYOUT VIEWS
S2.0 – END ELEVATIONS AND CONNECTION DETAILS
S3.0 – FOOTING LAYOUT AND BRIDGE FOOTING DETAILS
S4.0 – WINGWALL FOOTING DETAILS
S5.0 – RIGID FRAME AND CURBWALL DETAILS
S6.0 – WINGWALLS WW1 AND WW2 DETAILS
S7.0 – WINGWALLS WW3 AND WW4 DETAILS
S8.0 – ANCHOR DETAILS

No.	Date	Revision	By
1	2/26/2015	Revised per EOR	PJL

STATE OF VERMONT
MICHAEL P. JOWAISS
No. 9031
Structural I
Licensed
PROFESSIONAL ENGINEER
5/12/15

MICHIE CORPORATION
173 BUXTON INDUSTRIAL DRIVE - PO BOX 870
HENNIKER, NH 03242
PHONE: 603-428-3218
FAX: 603-428-7426
WWW.MICHIECORP.COM

TH4 over Branch of Mill River - VTAOT STP 1443 (44)
BR No 37 - Shrewsbury, VT
12'-0" x 8'-0" Rigid Frame Bridge
Layout Views

Scale: AS SHOWN
Checked by: CFP
Drawn by: PJL
Designed by: PJL
Project No. 5576
Date: 12/24/2014

Prepared for:
Casella Construction
8 US4 East
Mendon VT 05701

DWG NO.
S1.0

Delta 2015.059.003
C:\PROJECTS\CASELLA CONSTRUCTION\SHREWSBURY, VT - VTAOT STP 1443 (44)\DWGS\RFB 12x8 CASELLA 5576.DWG 2/26/2015 10:16 AM

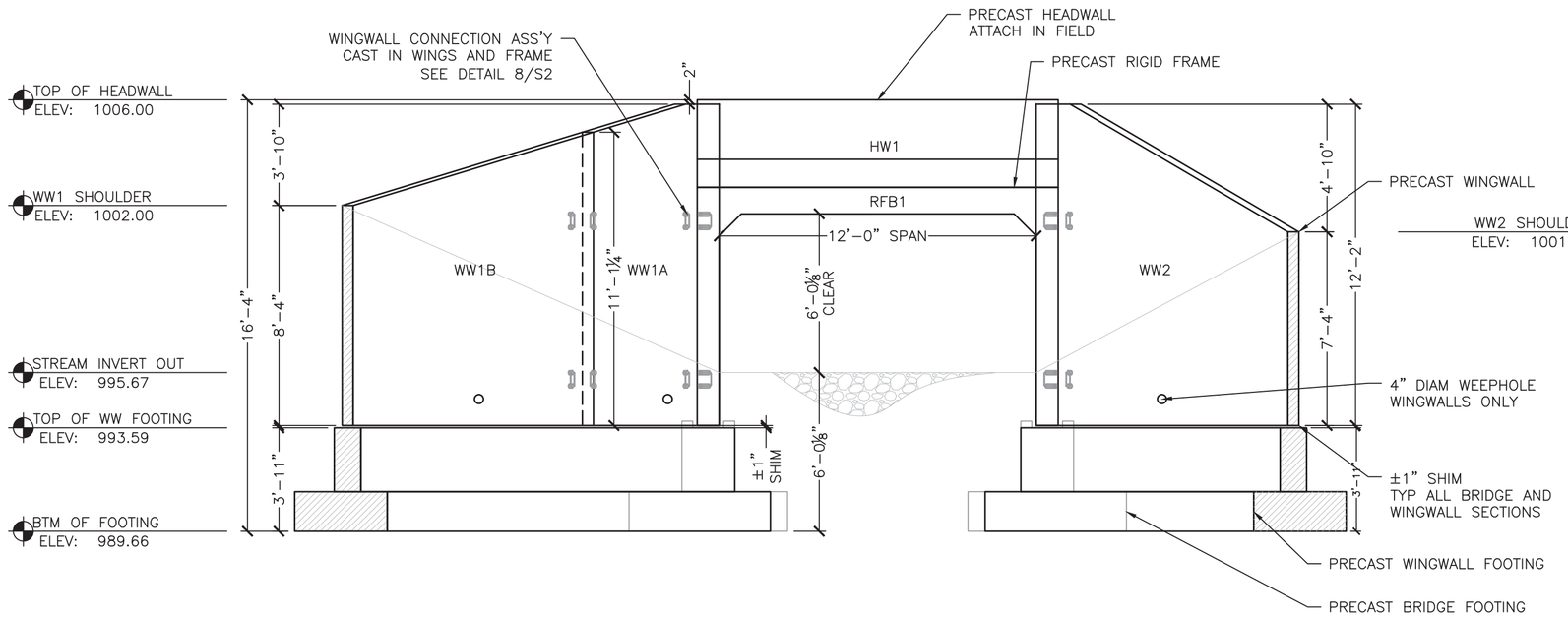

1 S2.0 OUTLET END ELEVATION
¼" = 1'-0"

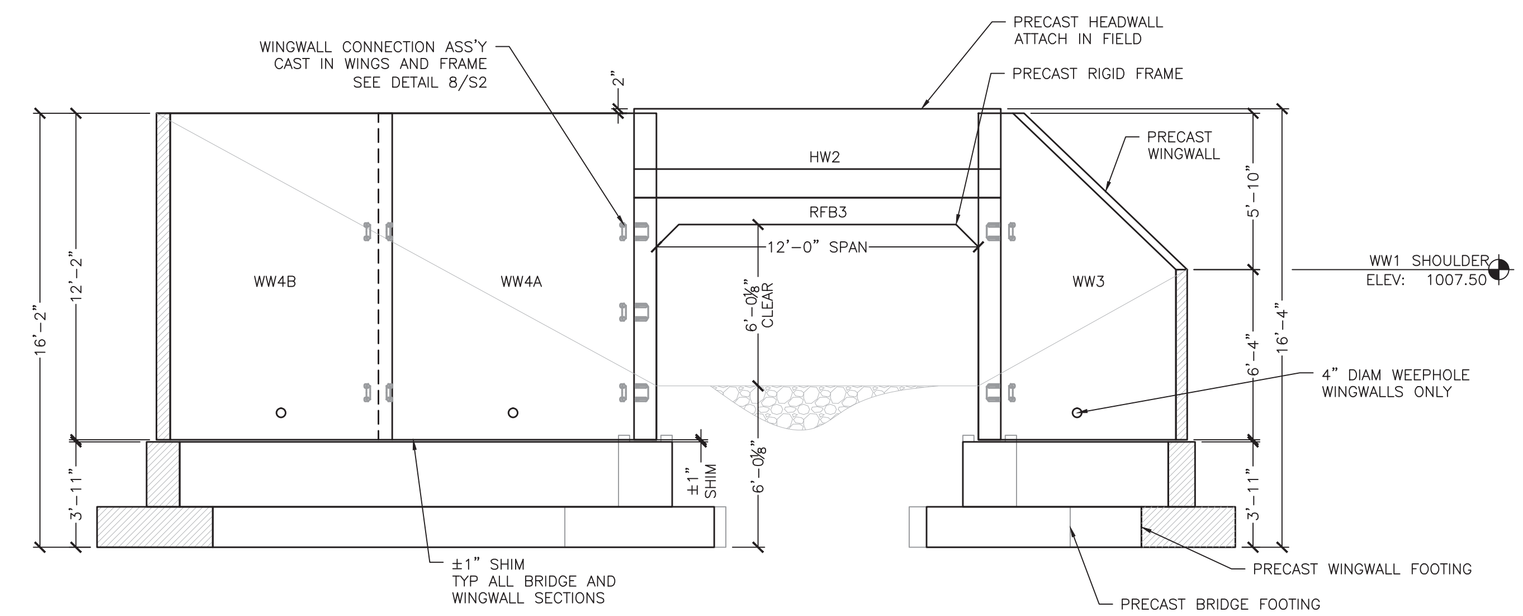

2 S2.0 INLET END ELEVATION
¼" = 1'-0"

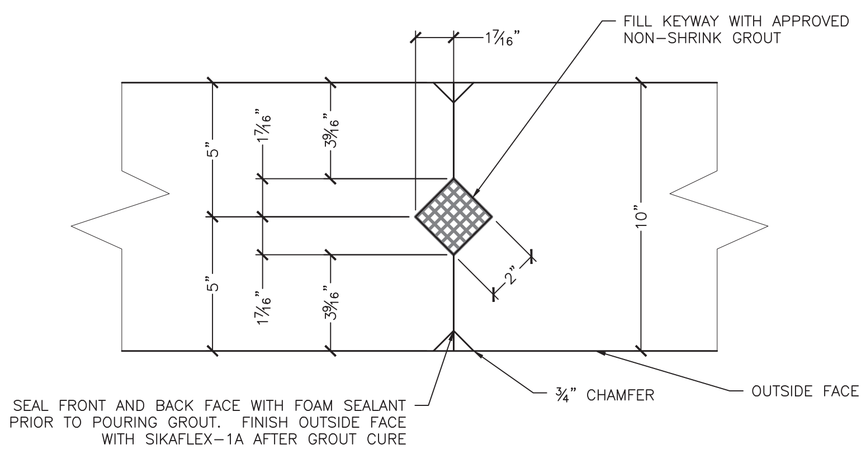

3 S2.0 WINGWALL VERTICAL KEYWAY DETAIL
3" = 1'-0"

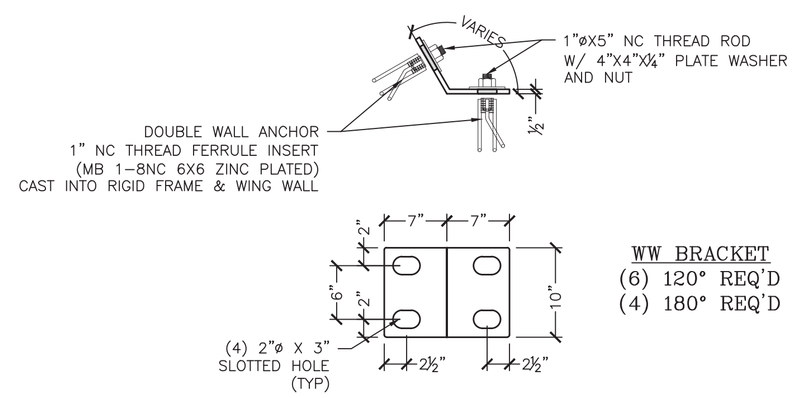

PLATES TO BE MADE OF ½" MILD STEEL, PLASMA CUT, AND BENT AS REQUIRED. (HOT DIPPED GALVANIZED AFTER BENDING)

5A S2.0 ½" WINGWALL BRACKET DETAIL
1" = 1'-0"

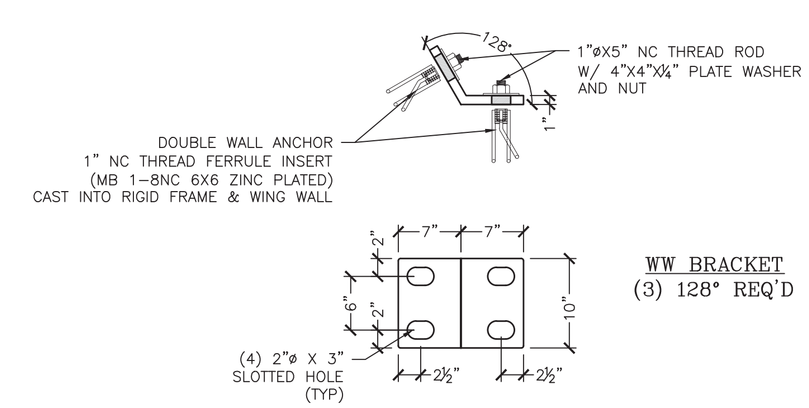

PLATES TO BE MADE OF 1" MILD STEEL, PLASMA CUT, AND BENT AS REQUIRED. (HOT DIPPED GALVANIZED AFTER BENDING)

5B S2.0 1" WINGWALL BRACKET DETAIL
1" = 1'-0"

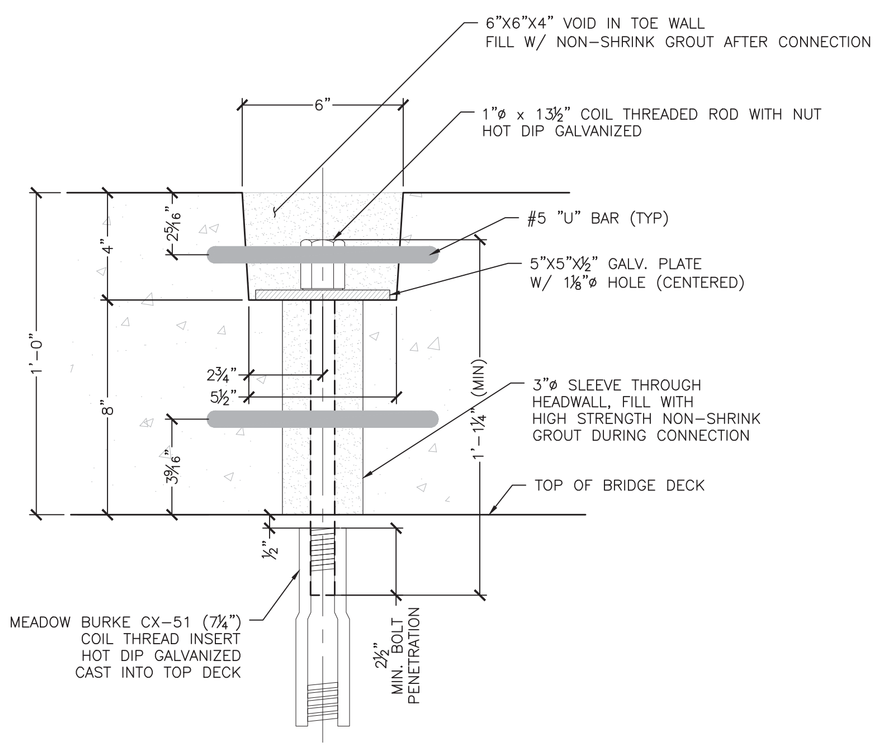

4 S2.0 HEADWALL ANCHORAGE DETAIL
3" = 1'-0"

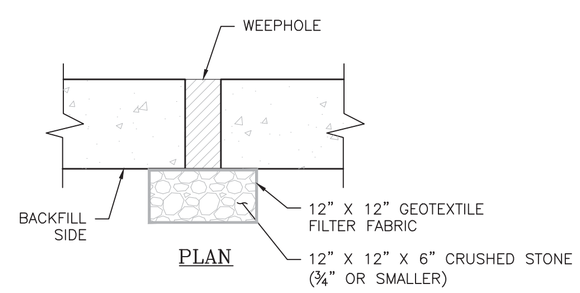

6 S2.0 WEEPHOLE BACKFILL DETAIL
1" = 1'-0"

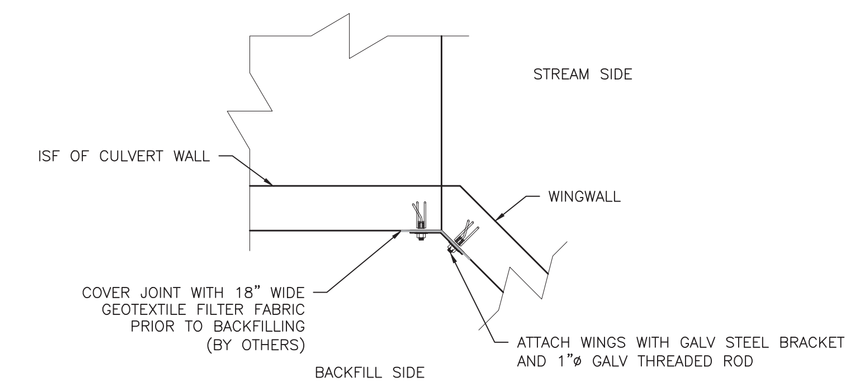

8 S2.0 BRIDGE TO WW JOINT DETAIL
½" = 1'-0"

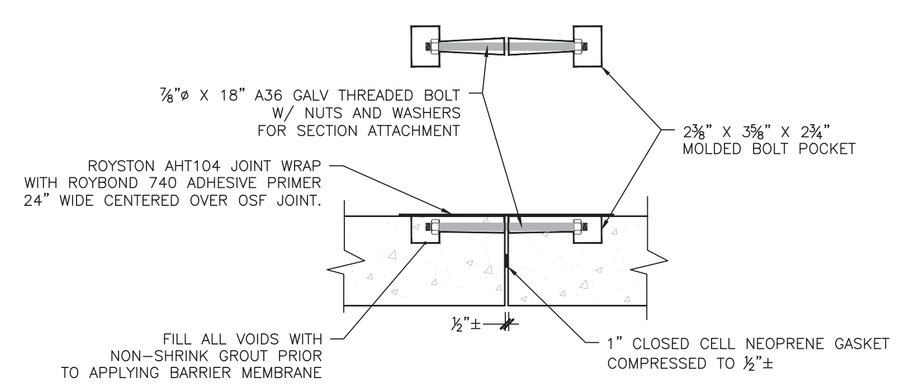

7 S2.0 RIGID FRAME JOINT DETAIL
1" = 1'-0"

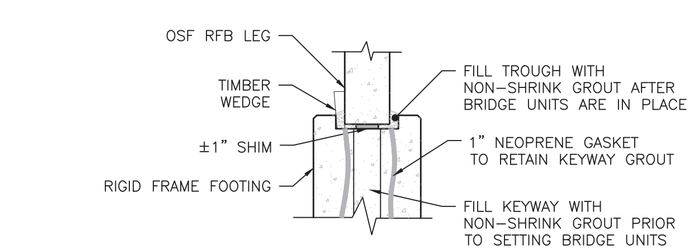

9 S2.0 UNIT SETTING DETAILS
½" = 1'-0"

No.	Date	Revision	By
1	2/26/2015	Revised per EOR	PJL

STATE OF VERMONT — PAUL J. LEVESQUE — No. 9931 — Structural I — Licensed Professional Engineer — 5/12/15

MICHIE CORPORATION
173 BUXTON INDUSTRIAL DRIVE - PO BOX 870
HENNIKER, NH 03242
PHONE: 603-428-3218
FAX: 603-428-7426
WWW.MICHIECORP.COM

TH4 over Branch of Mill River - VTAOT STP 1443 (44)
BR No 37 - Shrewsbury, VT

12'-0" x 8'-0" Rigid Frame Bridge
End Elevations and Connection Details

Project No. 5576 — Scale: AS SHOWN
Date: 12/24/2014 — Designed by: PJL — Drawn by: PJL — Checked by: CFP

Prepared for:
Casella Construction
8 US4 East
Mendon VT 05701

DWG NO. S2.0

Delta 2015.059.003
S:\PROJECTS\CASELLA CONSTRUCTION\SHREWSBURY, VT - VTAOT STP 1443 (44)\DWGS\WEB 12'X8' CASELLA 5576.DWG 2/26/2015 10:16 AM

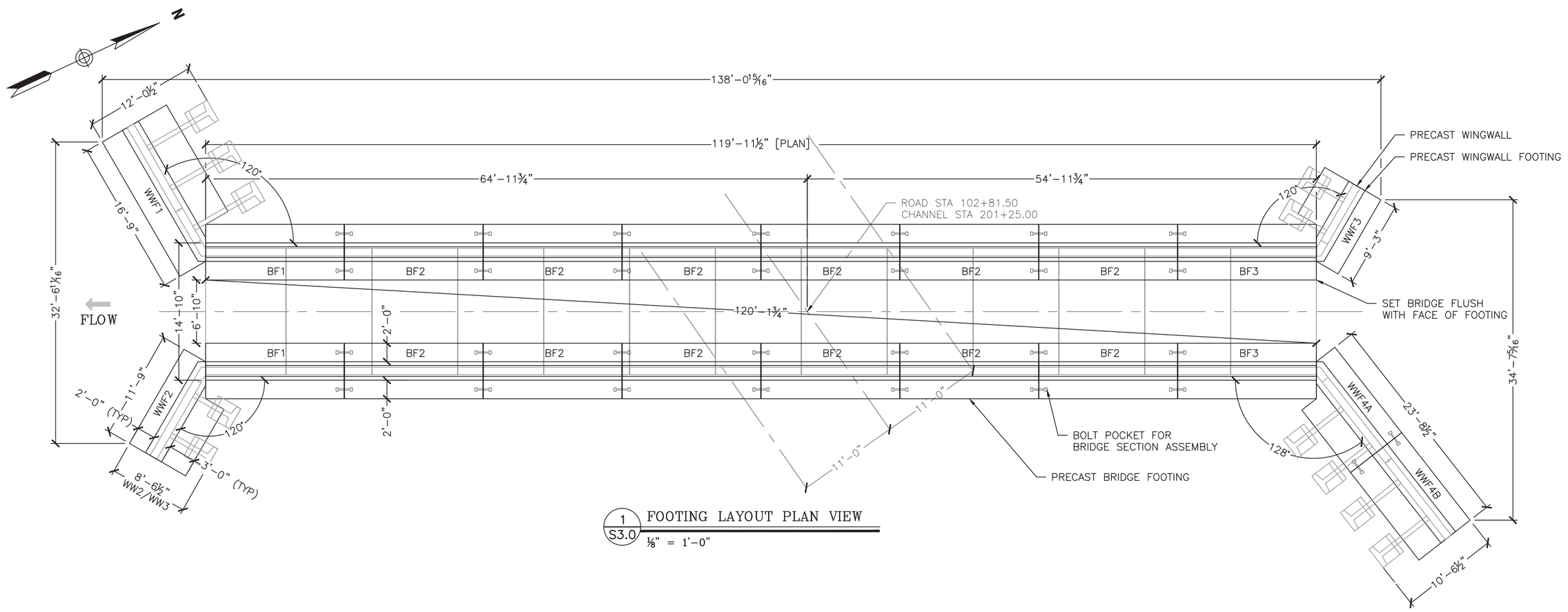

1 S3.0 FOOTING LAYOUT PLAN VIEW
⅛" = 1'-0"

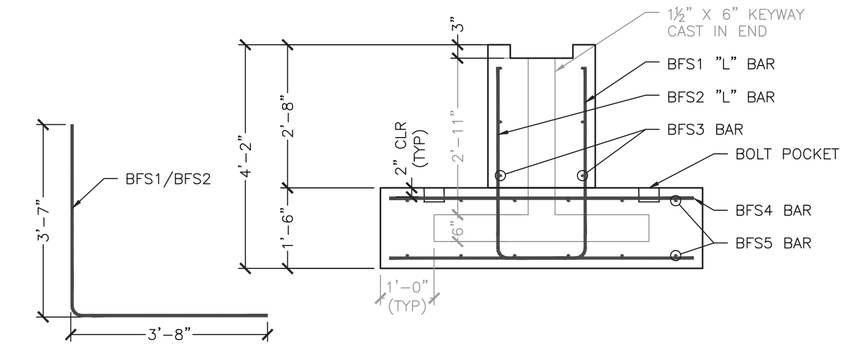

8 S3.0 BRIDGE FOOTING REINFORCING SECTION
½" = 1'-0"

BRIDGE FOOTING REINFORCING SCHEDULE

ITEM	MARK	SIZE	BEND	SPACING	QTY	LENGTH
BF1	BFS1	#5	L	10"	19	7'-1½"
	BFS2	#5	L	10"	19	7'-1½"
	BFS3	#4	STR	12"	6	14'-10" LP
	BFS4	#5	STR	10"	19	5'-8"
	BFS5	#4	STR	12"	12	14'-11" LP
BF2	BFS1	#5	L	10"	19	7'-1½"
	BFS2	#5	L	10"	19	7'-1½"
	BFS3	#4	STR	12"	6	14'-8"
	BFS4	#5	STR	10"	19	5'-8"
	BFS5	#4	STR	12"	12	14'-8"
BF3	BFS1	#5	L	10"	18	7'-1½"
	BFS2	#5	L	10"	18	7'-1½"
	BFS3	#4	STR	12"	6	14'-7¾" LP
	BFS4	#5	STR	10"	18	5'-8"
	BFS5	#4	STR	12"	12	14'-5¾" LP

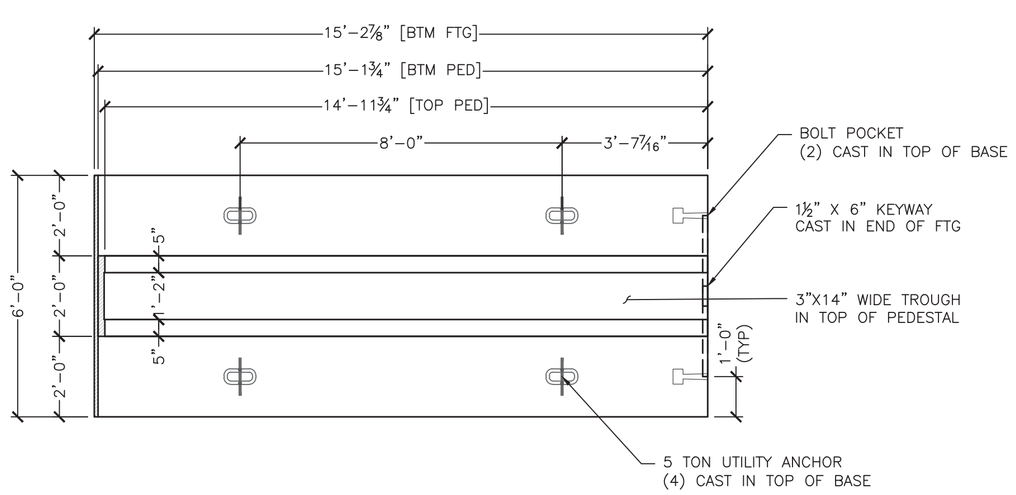

2 S3.0 BRIDGE FOOTING BF1 PLAN VIEW
⅜" = 1'-0"

BF1 - 2 REQ'D
ITEM #282400
BASE: 5.06CY
PEDESTAL: 2.82CY
TOTAL WT: 33,100#

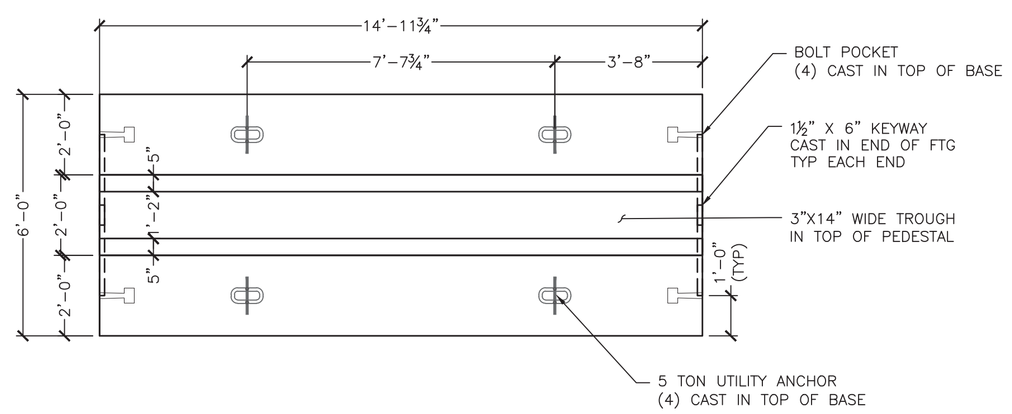

4 S3.0 BRIDGE FOOTING BF2 PLAN VIEW
⅜" = 1'-0"

BF2 - 12 REQ'D
ITEM #282400
BASE: 4.99CY
PEDESTAL: 2.80CY
TOTAL WT: 32,710#

NOTE:
BUILDER MAY INSTALL ADDITIONAL
LIFTERS FOR HANDLING

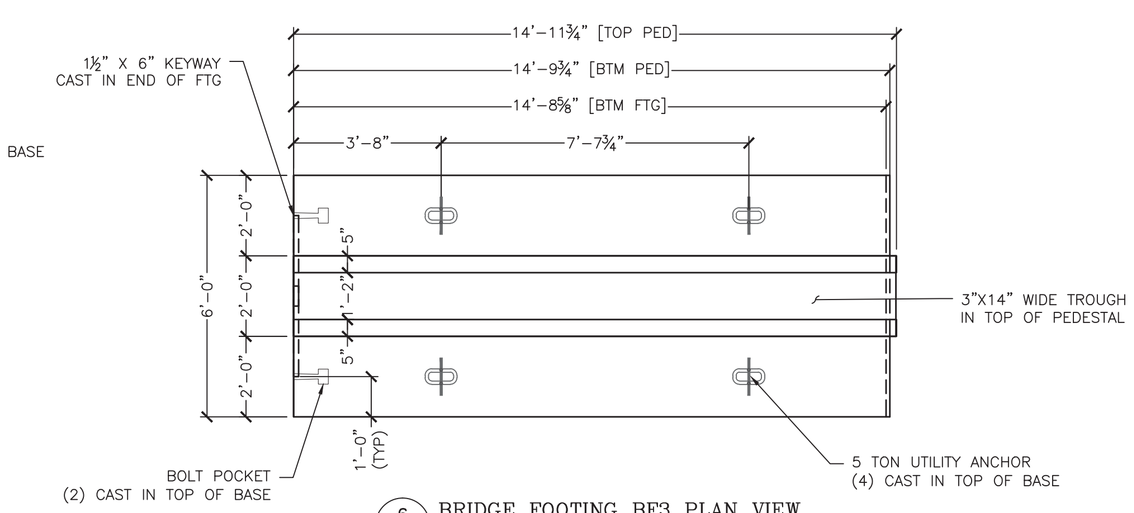

6 S3.0 BRIDGE FOOTING BF3 PLAN VIEW
⅜" = 1'-0"

BF3 - 2 REQ'D
ITEM #282400
BASE: 4.92CY
PEDESTAL: 2.78CY
TOTAL WT: 32,340#

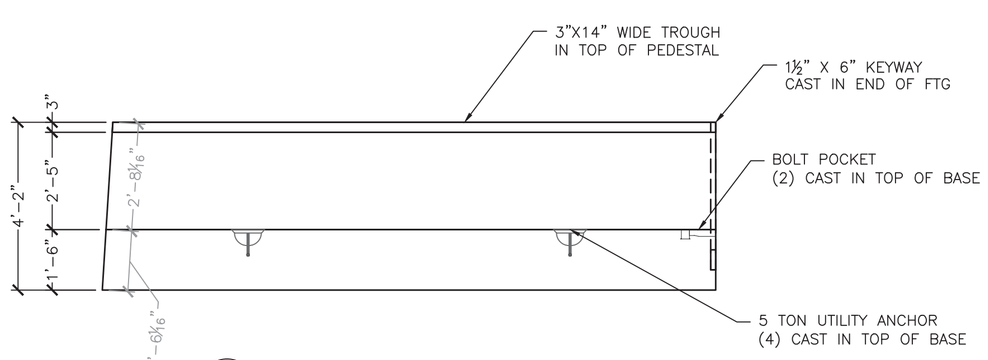

3 S3.0 BRIDGE FOOTING BF1 ELEVATION VIEW
⅜" = 1'-0"

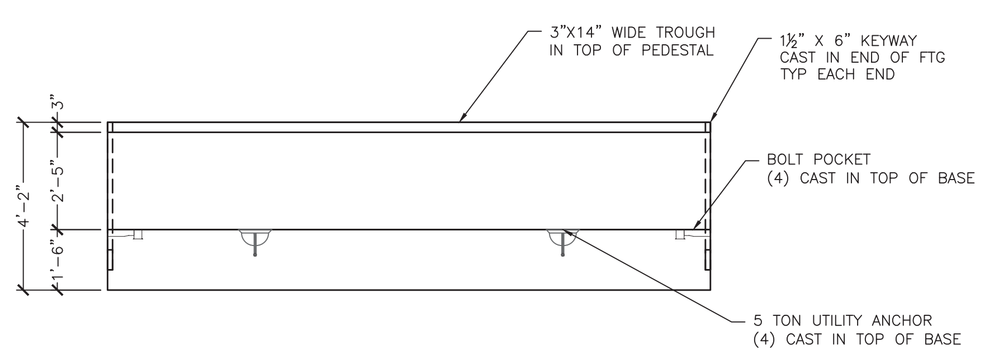

5 S3.0 BRIDGE FOOTING BF2 ELEVATION VIEW
⅜" = 1'-0"

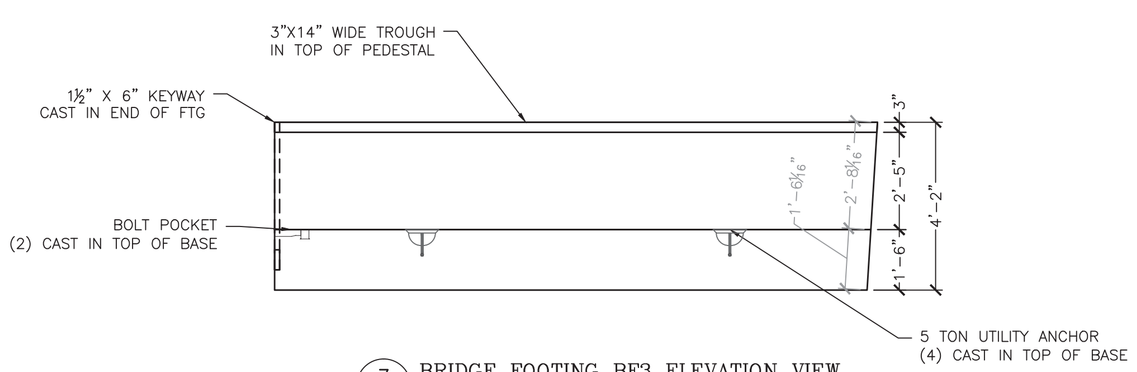

7 S3.0 BRIDGE FOOTING BF3 ELEVATION VIEW
⅜" = 1'-0"

No.	Date	Revision	By
1	2/26/2015	Revised per EOR	PJL

STATE OF VERMONT
PAUL J. LEMIEUX
No. 9031
Structural I
(Licensed Engineer)
PROFESSIONAL ENGINEER
5/12/15

MICHIE CORPORATION
173 BUXTON INDUSTRIAL DRIVE - PO BOX 870
HENNIKER, NH 03242
PHONE: 603-428-3218
FAX: 603-428-7426
WWW.MICHIECORP.COM

TH4 over Branch of Mill River - VTAOT STP 1443 (44)
BR No 37 - Shrewsbury, VT

12'-0" x 8'-0" Rigid Frame Bridge
Footing Layout and Bridge Footing Details

Project No. 5576
Date: 12/24/2014
Designed by: PJL
Drawn by: PJL
Checked by: CFP
Scale: AS SHOWN

Prepared for:
Casella Construction
8 US4 East
Mendon VT 05701

DWG NO.
S3.0

Delta 2015.059.003

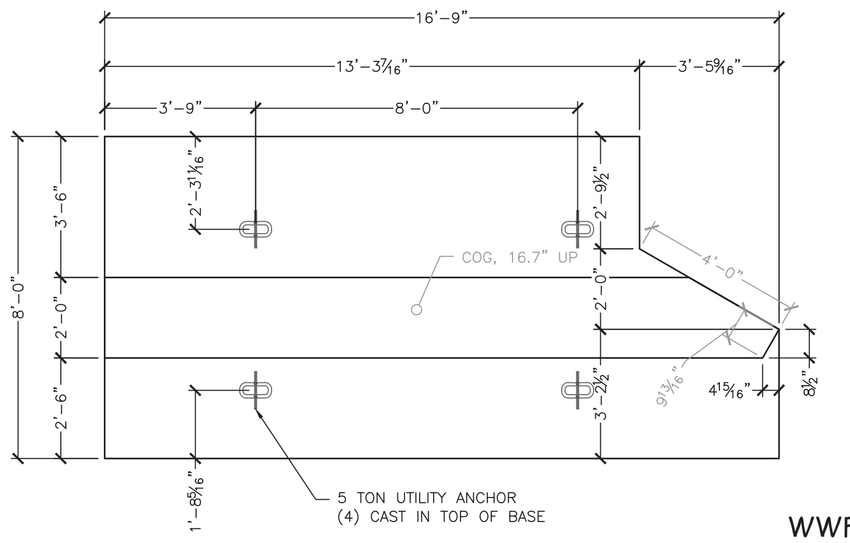

1 S4.0 WINGWALL FOOTING WWF1 PLAN VIEW
3/8" = 1'-0"

WWF1 - 1 REQ'D
ITEM #282401
BASE: 6.71CY
PEDESTAL: 2.86CY
TOTAL WT: 40,215#

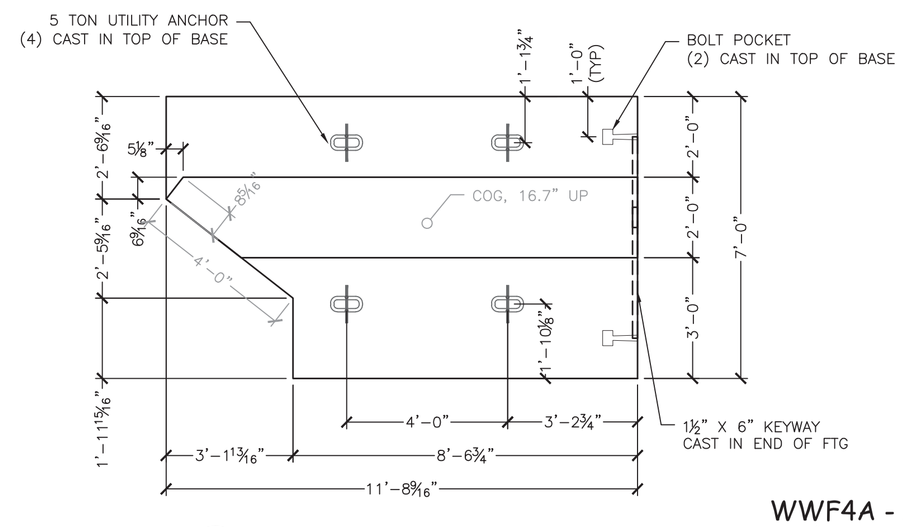

4 S4.0 WINGWALL FOOTING WWF4A PLAN VIEW
3/8" = 1'-0"

WWF4A - 1 REQ'D
ITEM #282401
BASE: 3.99CY
PEDESTAL: 1.96CY
TOTAL WT: 25,010#

NOTE:
BUILDER MAY INSTALL ADDITIONAL LIFTERS FOR HANDLING

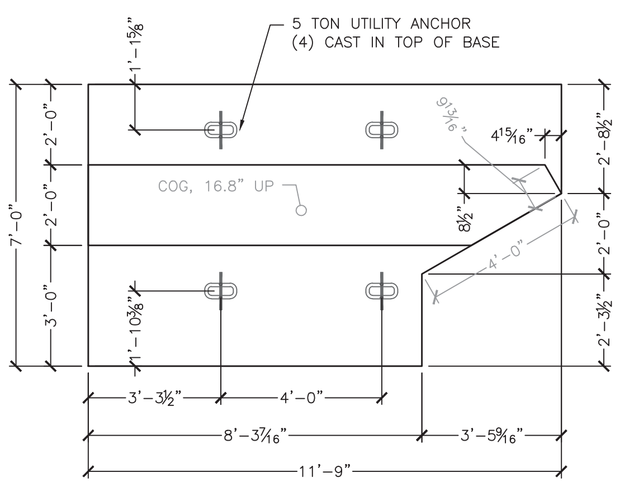

2 S4.0 WINGWALL FOOTING WWF2 PLAN VIEW
3/8" = 1'-0"

WWF2 - 1 REQ'D
ITEM #282401
BASE: 3.94CY
PEDESTAL: 1.96CY
TOTAL WT: 24,780#

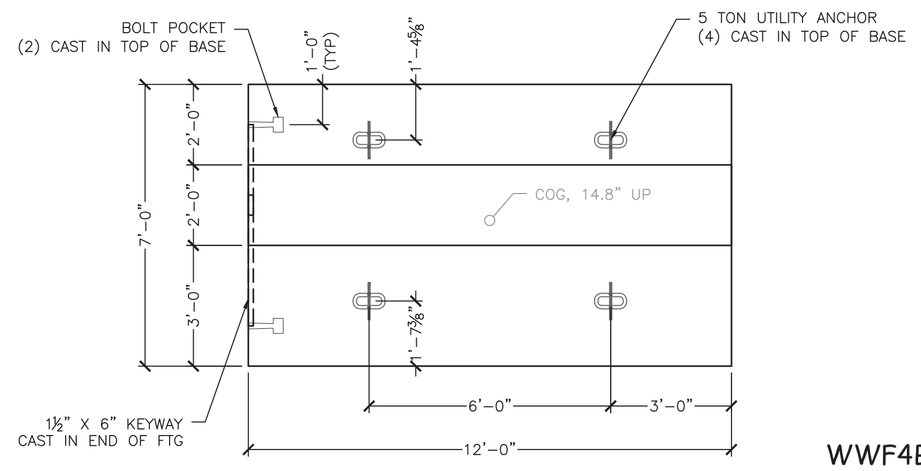

5 S4.0 WINGWALL FOOTING WWF4B PLAN VIEW
3/8" = 1'-0"

WWF4B - 1 REQ'D
ITEM #282401
BASE: 4.67CY
PEDESTAL: 2.15CY
TOTAL WT: 28,640#

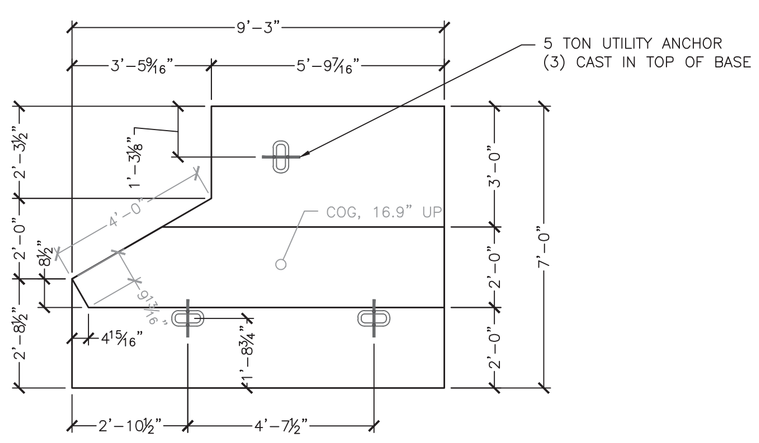

3 S4.0 WINGWALL FOOTING WWF3 PLAN VIEW
3/8" = 1'-0"

WWF3 - 1 REQ'D
ITEM #282401
BASE: 2.96CY
PEDESTAL: 1.51CY
TOTAL WT: 18,790#

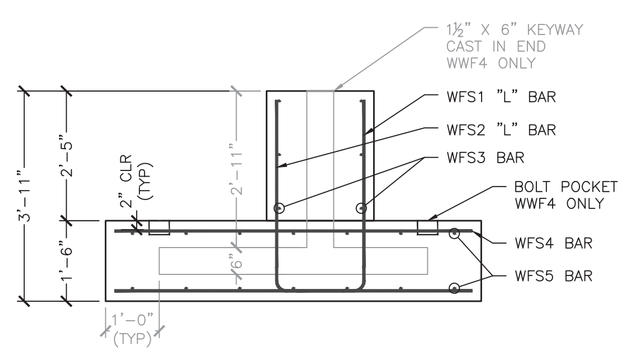

6 S4.0 WINGWALL FTG REINFORCING SECTION
1/2" = 1'-0"

WINGWALL FOOTING REINFORCING NOTES:
* TRIM LEG OF WFS1 "L" BARS TO FIT IN TAPERED ENDS (10" MIN)
* TURN WFS1 BAR WHEN 10" MIN LEG DOES NOT FIT

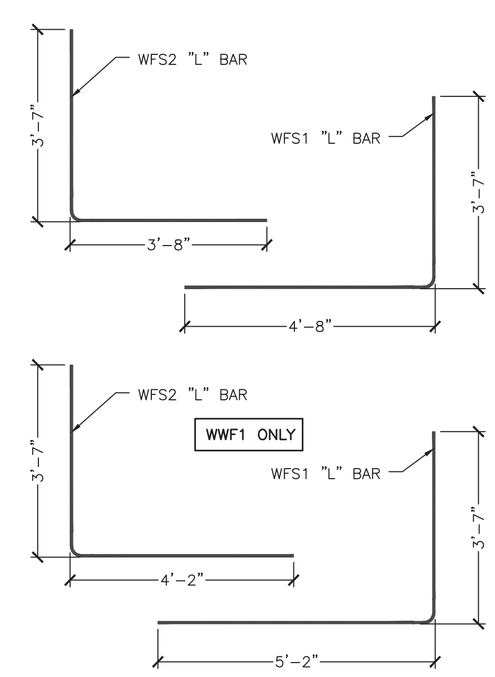

WINGWALL FOOTING REINFORCING SCHEDULE						
ITEM	MARK	SIZE	BEND	SPACING	QTY	LENGTH
WWF1	WFS1	#5	L	9"	23	8'-7½"
	WFS2	#6	L	9"	18	7'-7½"
	WFS3	#4	STR	12"	6	16'-0" LP
	WFS4	#5	STR	8"	26	7'-8"
	WFS5	#4	STR	12"	16	16'-5" LP
WWF2	WFS1	#5	L	10"	14	8'-1½"
	WFS2	#5	L	10"	12	7'-1½"
	WFS3	#4	STR	12"	6	11'-0" LP
	WFS4	#5	STR	10"	14	6'-8"
	WFS5	#4	STR	12"	14	11'-5" LP
WWF3	WFS1	#5	L	10"	11	8'-1½"
	WFS2	#5	L	10"	9	7'-1½"
	WFS3	#4	STR	12"	6	8'-6" LP
	WFS4	#5	STR	10"	11	6'-8"
	WFS5	#4	STR	12"	14	8'-11" LP
WWF4A	WFS1	#5	L	10"	14	8'-1½"
	WFS2	#5	L	10"	12	7'-1½"
	WFS3	#4	STR	12"	6	10'-11½" LP
	WFS4	#5	STR	10"	14	6'-8"
	WFS5	#4	STR	12"	14	11'-4½" LP
WWF4B	WFS1	#5	L	10"	15	8'-1½"
	WFS2	#5	L	10"	15	7'-1½"
	WFS3	#4	STR	12"	6	11'-8"
	WFS4	#5	STR	10"	15	6'-8"
	WFS5	#4	STR	12"	14	11'-8"

No.	Date	Revision	By
4	2/26/2015	Revised per EOR	PJL

STATE OF VERMONT
Scott M. Donahue
No. 9031
Structural
Licensed Professional Engineer
5/12/15

MICHIE CORPORATION
173 BUXTON INDUSTRIAL DRIVE - PO BOX 870
HENNIKER, NH 03242
PHONE: 603-428-3218
FAX: 603-428-7426
WWW.MICHIECORP.COM

TH4 over Branch of Mill River - VTAOT STP 1443 (44)
BR No 37 - Shrewsbury, VT

12'-0" x 8'-0" Rigid Frame Bridge
Wingwall Footing Details

Project No. 5576
Date: 12/24/2014
Designed by: PJL
Drawn by: PJL
Checked by: CFP
Scale: AS SHOWN

Prepared for:
Casella Construction
8 US4 East
Mendon VT 05701

DWG NO.
S4.0

Delta 2015.059.003

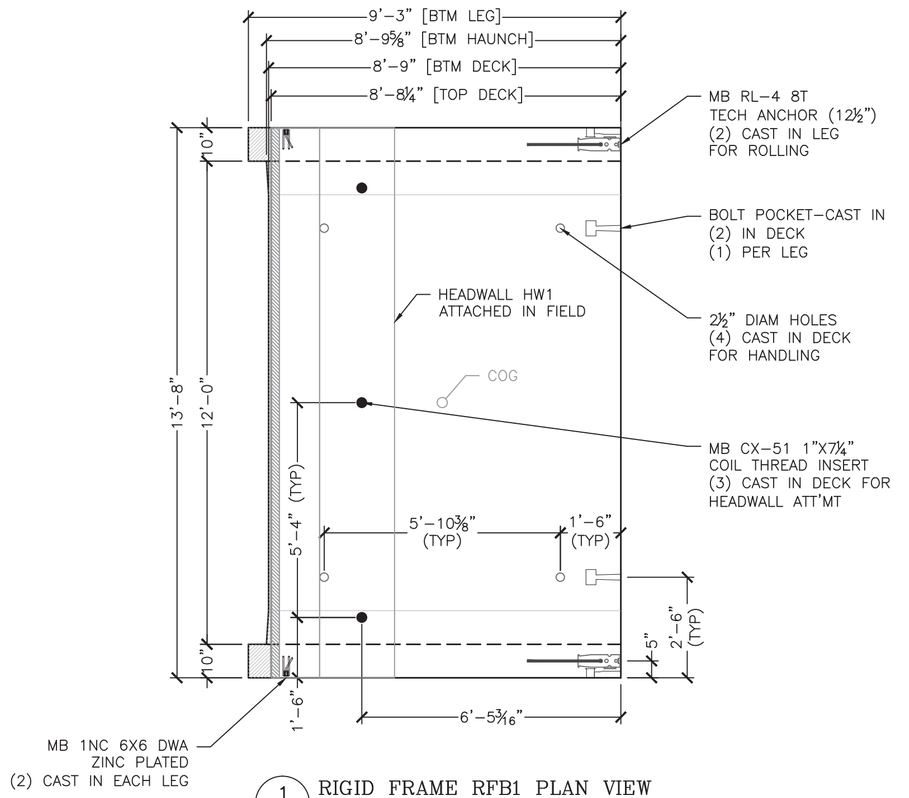

1 S5.0 RIGID FRAME RFB1 PLAN VIEW
⅜" = 1'-0"

RFB1 - 1 REQ'D
ITEM #291208
RFB1: 9.08CY
TOTAL WT: 38,150#

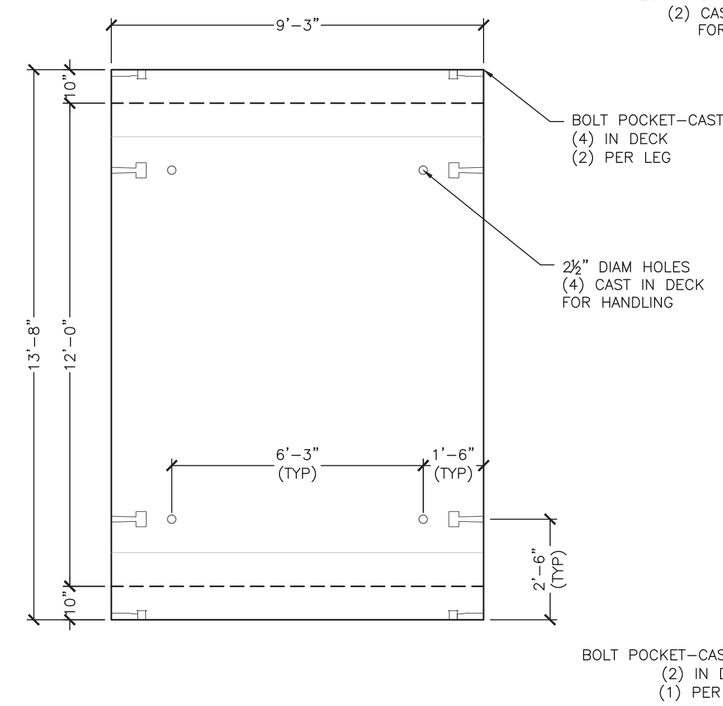

3 S5.0 RIGID FRAME RFB2 PLAN VIEW
⅜" = 1'-0"

RFB2 - 11 REQ'D
ITEM #291208
RFB2: 9.49CY
TOTAL WT: 39,850#

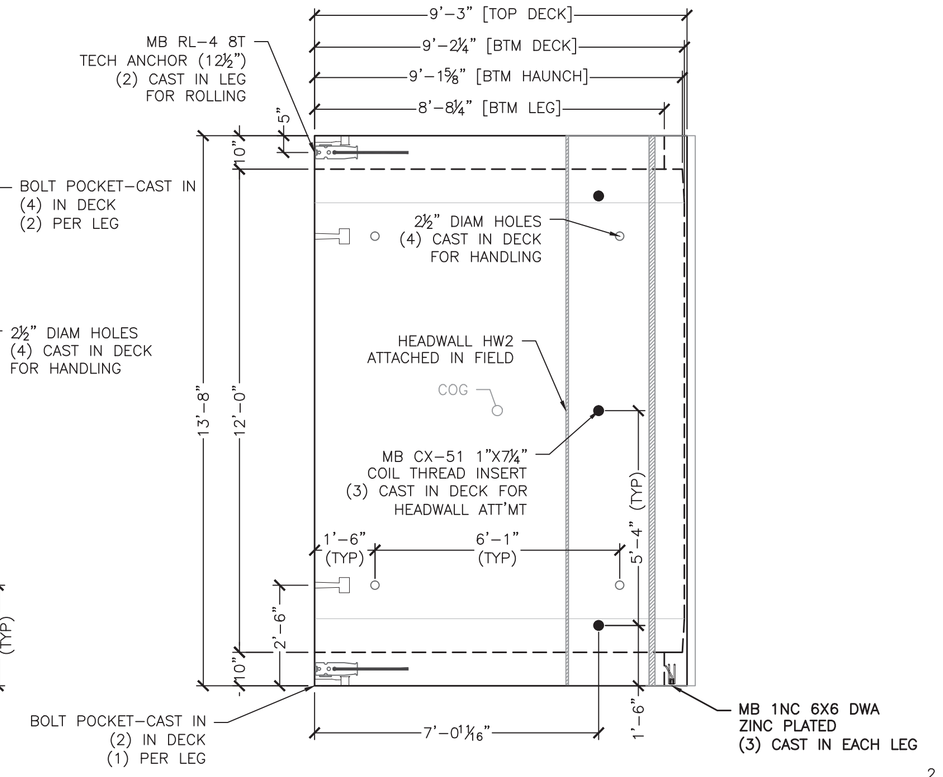

5 S5.0 RIGID FRAME RFB3 PLAN VIEW
⅜" = 1'-0"

RFB3 - 1 REQ'D
ITEM #291208
RFB3: 9.32CY
TOTAL WT: 39,140#

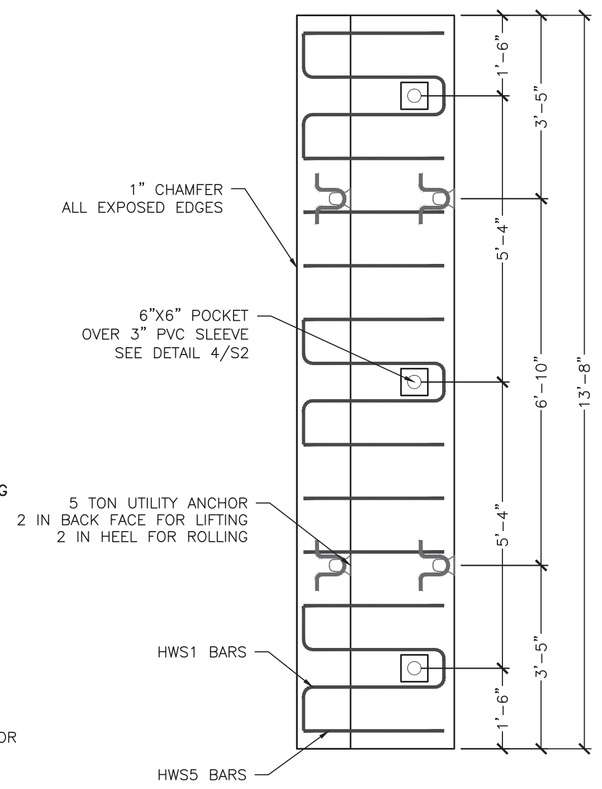

9 S5.0 HEADWALL HW1 PLAN VIEW
½" = 1'-0"

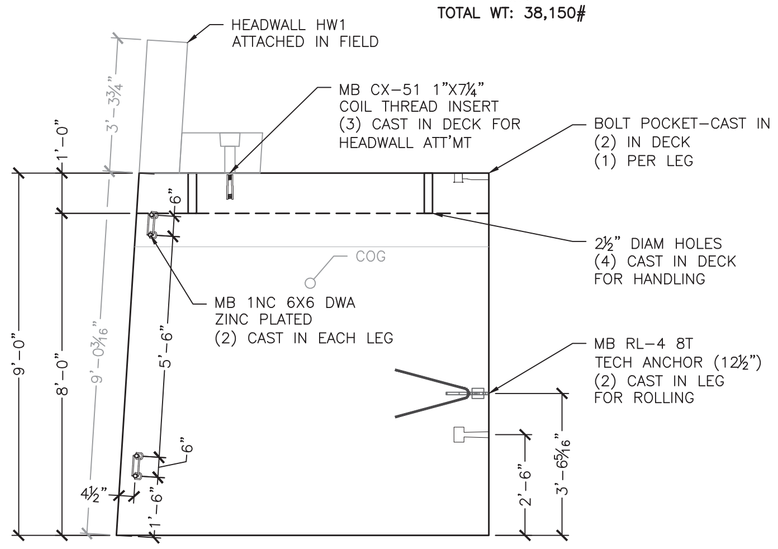

2 S5.0 RIGID FRAME RFB1 ELEVATION
⅜" = 1'-0"

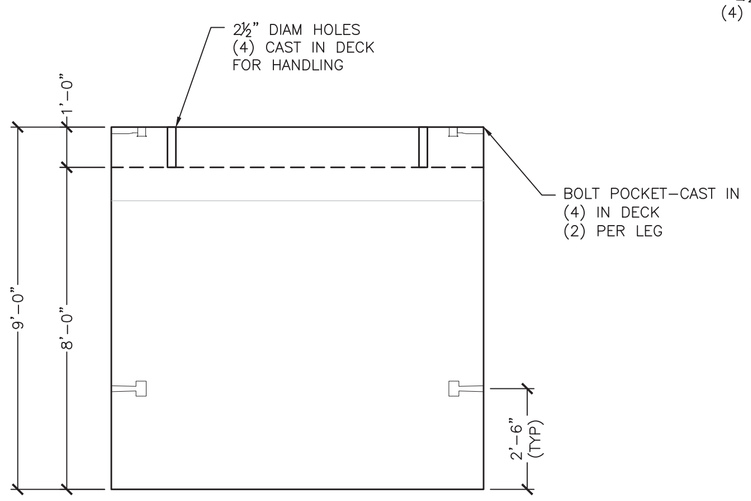

4 S5.0 RIGID FRAME RFB2 ELEVATION
⅜" = 1'-0"

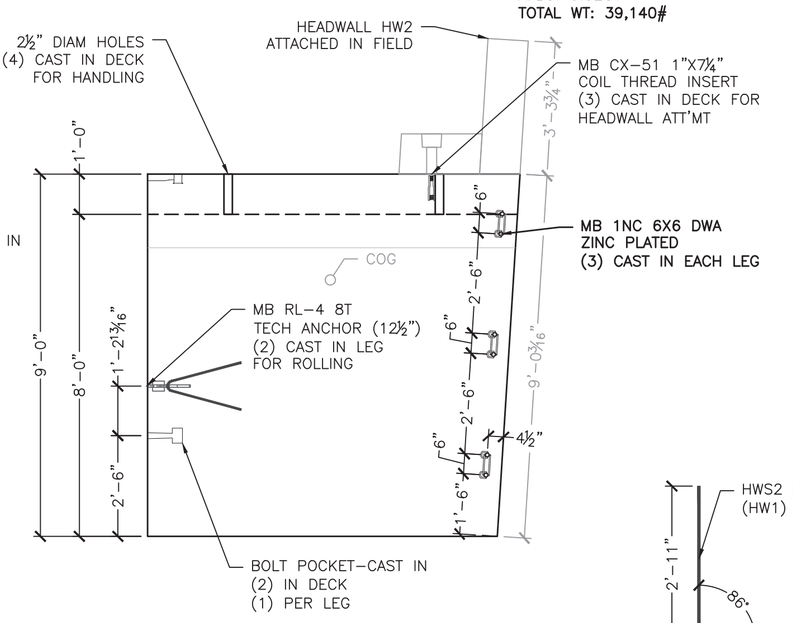

6 S5.0 RIGID FRAME RFB3 ELEVATION
⅜" = 1'-0"

HW1 - 1 REQ'D
HW2 - 1 REQ'D
ITEM #275701
WALL: 1.66CY
HEEL: 1.01CY
TOTAL WT: 11,200#

PRODUCTION NOTE:
HW1 SHOWN, MATCH-CAST TO RFB1
HW2 SIMILAR, MATCH-CAST TO RFB3

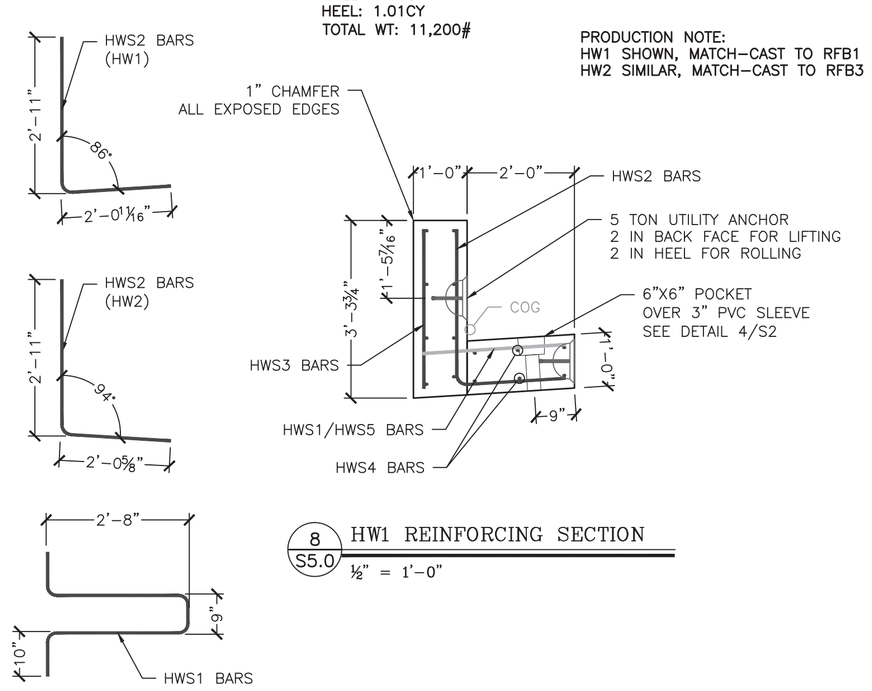

8 S5.0 HW1 REINFORCING SECTION
½" = 1'-0"

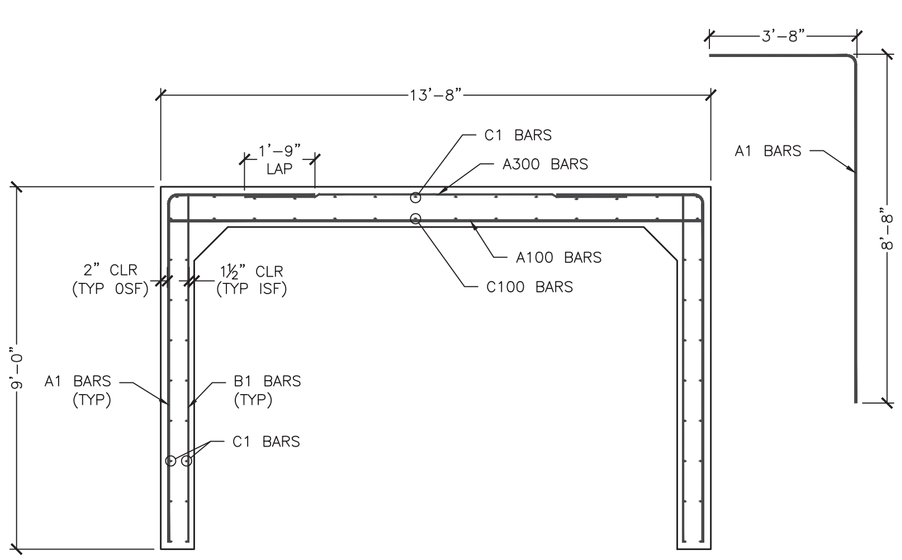

7 S5.0 RFB REINFORCING SECTION
⅜" = 1'-0"

RFB2 REINFORCING SCHEDULE						
LOCATION	MARK	QTY	SIZE	SPACING	TYPE	CUT LENGTH
TOP SLAB (INT)	A100	19	#6	6"	STRAIGHT	13'-4"
TOP SLAB (EXT)	A300	10	#4	12"	STRAIGHT	9'-6"
WALL (EXT)	A1	38	#6	6"	"L" BARS	12'-2⅛"
WALL (INT)	B1	20	#4	12"	STRAIGHT	8'-8"
LONGIT. TOP (EXT)	C1	14	#4	12"	STRAIGHT	8'-11"
LONGIT. TOP (INT)	C100	14	#4	12"	STRAIGHT	8'-11"
LONGIT. WALL	C1	32	#4	12"	STRAIGHT	8'-11"
RFB1 REINFORCING SCHEDULE						
LOCATION	MARK	QTY	SIZE	SPACING	TYPE	CUT LENGTH
TOP SLAB (INT)	A100	18	#6	6"	STRAIGHT	13'-4"
TOP SLAB (EXT)	A300	10	#4	12"	STRAIGHT	9'-6"
WALL (EXT)	A1	*38	#6	6"	"L" BARS	12'-2⅛"
WALL (INT)	B1	*20	#4	12"	STRAIGHT	8'-8"
LONGIT. TOP (EXT)	C1	14	#4	12"	STRAIGHT	8'-4"
LONGIT. TOP (INT)	C100	14	#4	12"	STRAIGHT	8'-5"
LONGIT. WALL	C1	32	#4	12"	STRAIGHT	VARIES 8'-11" TO 8'-4"
RFB3 REINFORCING SCHEDULE						
LOCATION	MARK	QTY	SIZE	SPACING	TYPE	CUT LENGTH
TOP SLAB (INT)	A100	19	#6	6"	STRAIGHT	13'-4"
TOP SLAB (EXT)	A300	10	#4	12"	STRAIGHT	9'-6"
WALL (EXT)	A1	*38	#6	6"	"L" BARS	12'-2⅛"
WALL (INT)	B1	*20	#4	12"	STRAIGHT	8'-8"
LONGIT. TOP (EXT)	C1	14	#4	12"	STRAIGHT	8'-11
LONGIT. TOP (INT)	C100	14	#4	12"	STRAIGHT	8'-10¼"
LONGIT. WALL	C1	32	#4	12"	STRAIGHT	VARIES 8'-11" TO 8'-4"

*SPLAY FINAL BAR ALONG DIAGONAL
MAINTAIN DESIGN SPACING

HEADWALL REINFORCING SCHEDULE					
MARK	QTY	SIZE	SPACING	TYPE	CUT LENGTH
HWS1	3	#4	AS SHOWN	"U"	7'-3"
HWS2	14	#4	12"	"L"	4'-10⅝"
HWS3	14	#4	12"	STR	2'-11⅝"
HWS4	8 WALL 6 FOOT	#4	12"	STR	13'-4"
HWS5	10	#4	12" MAX	STR	2'-8"

No.	Date	Revision	By
4	2/26/2015	Revised per EOR	PJL

STATE OF VERMONT
PAUL JOSEPH LEMIEUX
No. 9031
Structural II
Vermont
PROFESSIONAL ENGINEER
5/12/15

MICHIE CORPORATION
173 BUXTON INDUSTRIAL DRIVE - PO BOX 870
HENNIKER, NH 03242
PHONE: 603-428-3218
FAX: 603-428-7426
WWW.MICHIECORP.COM

TH4 over Branch of Mill River - VTAOT STP 1443 (44)
BR No 37 - Shrewsbury, VT

12'-0" x 8'-0" Rigid Frame Bridge
Rigid Frame and Curbwall Details

Project No. 5576
Date: 12/24/2014
Designed by: PJL
Drawn by: PJL
Checked by: CFP
Scale: AS SHOWN

Prepared for:
Casella Construction
8 US4 East
Mendon VT 05701

DWG NO.
S5.0

Delta 2015.059.003

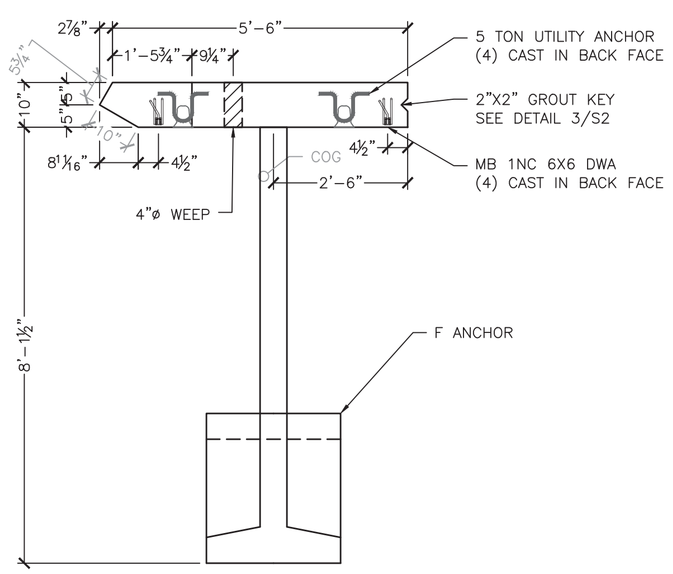

1 S6.0 WINGWALL WW1A PLAN VIEW
½" = 1'-0"

WW1A - 1 REQ'D
ITEM #275602
WALL: 1.95CY
D ANCHOR: 0.68CY
TOTAL WT: 11,050#

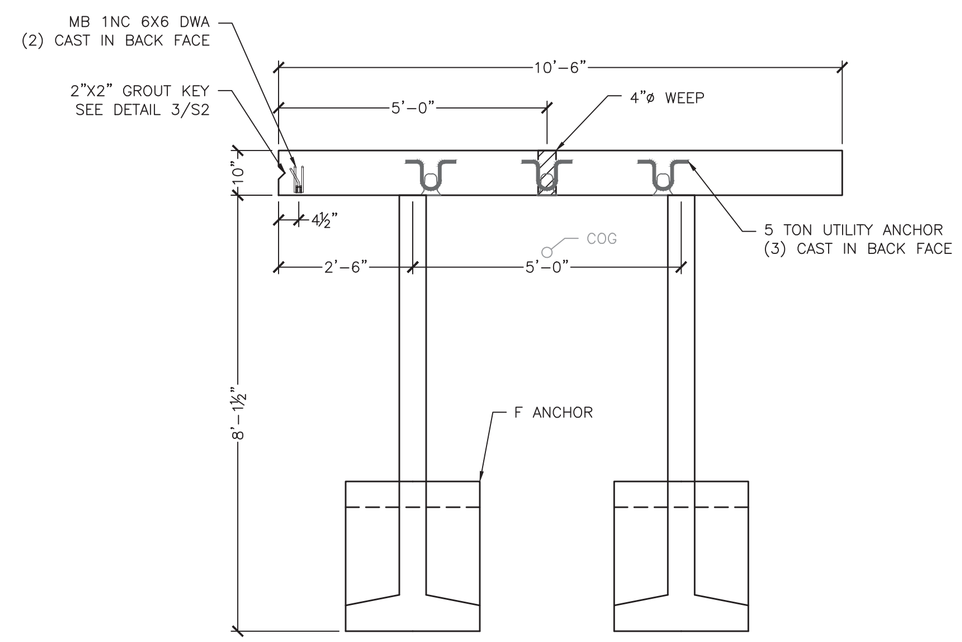

3 S6.0 WINGWALL WW1B PLAN VIEW
½" = 1'-0"

WW1B - 1 REQ'D
ITEM #275602
WALL: 3.15CY
F ANCHOR: 0.68CY/EA
TOTAL WT: 18,940#

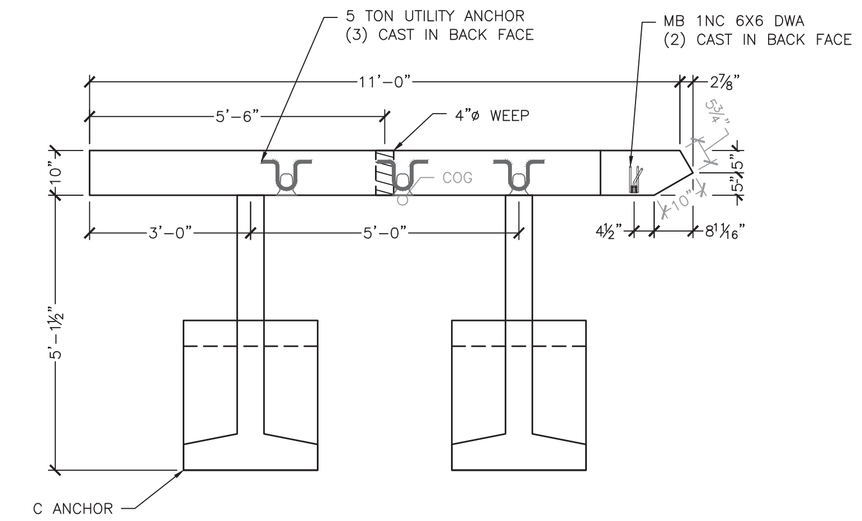

5 S6.0 WINGWALL WW2 PLAN VIEW
½" = 1'-0"

WW2 - 1 REQ'D
ITEM #275602
WALL: 3.37CY
C ANCHOR: 0.48CY/EA
TOTAL WT: 18,190#

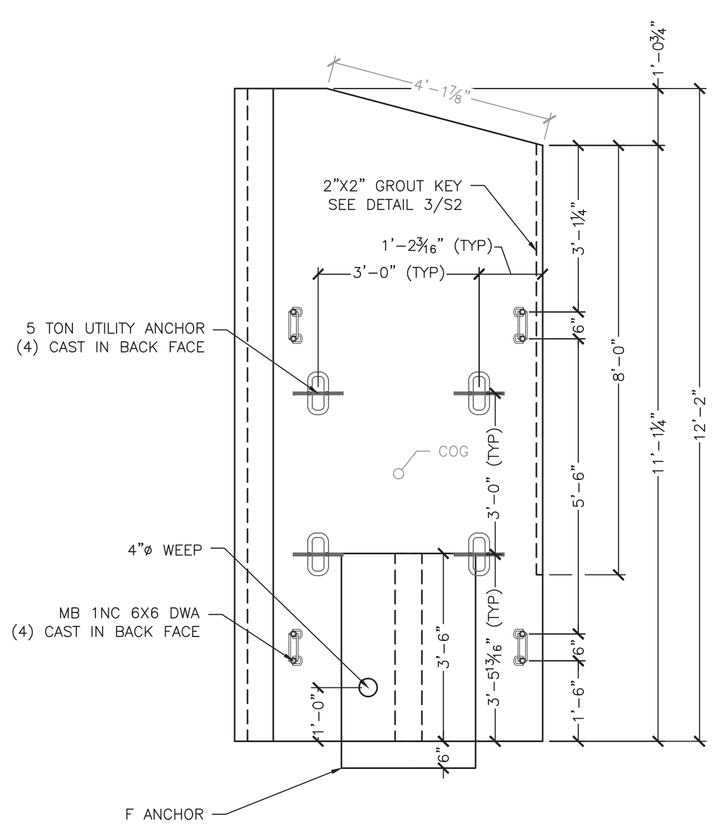

2 S6.0 WINGWALL WW1A ELEVATION VIEW
½" = 1'-0"

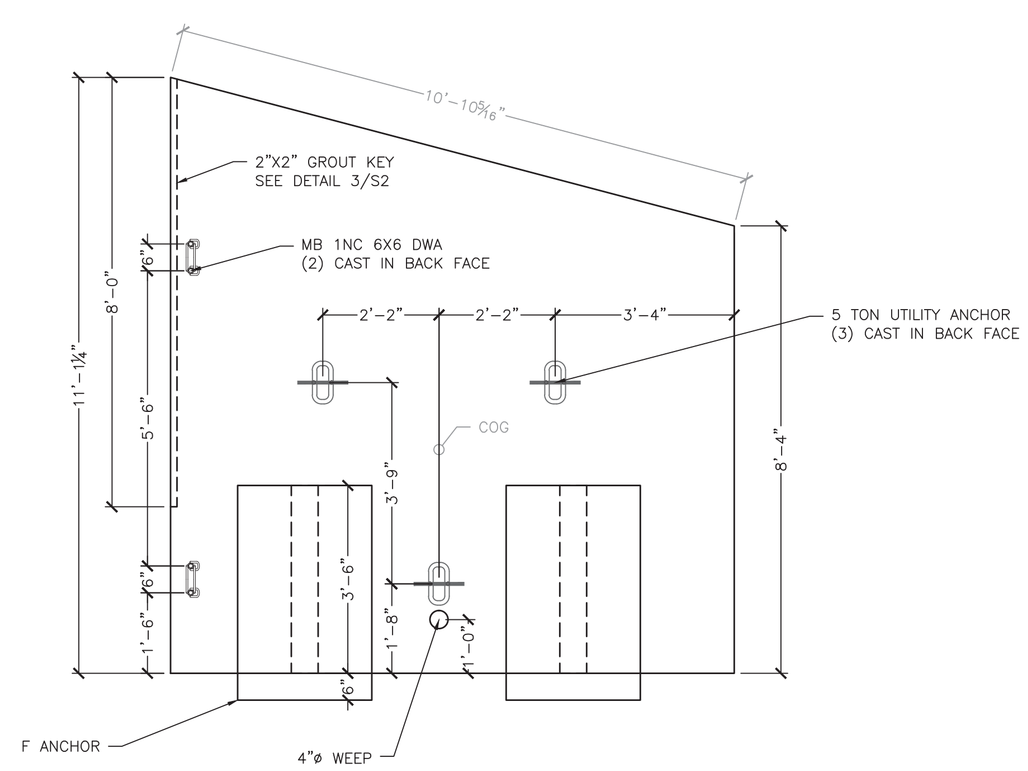

4 S6.0 WINGWALL WW1B ELEVATION VIEW
½" = 1'-0"

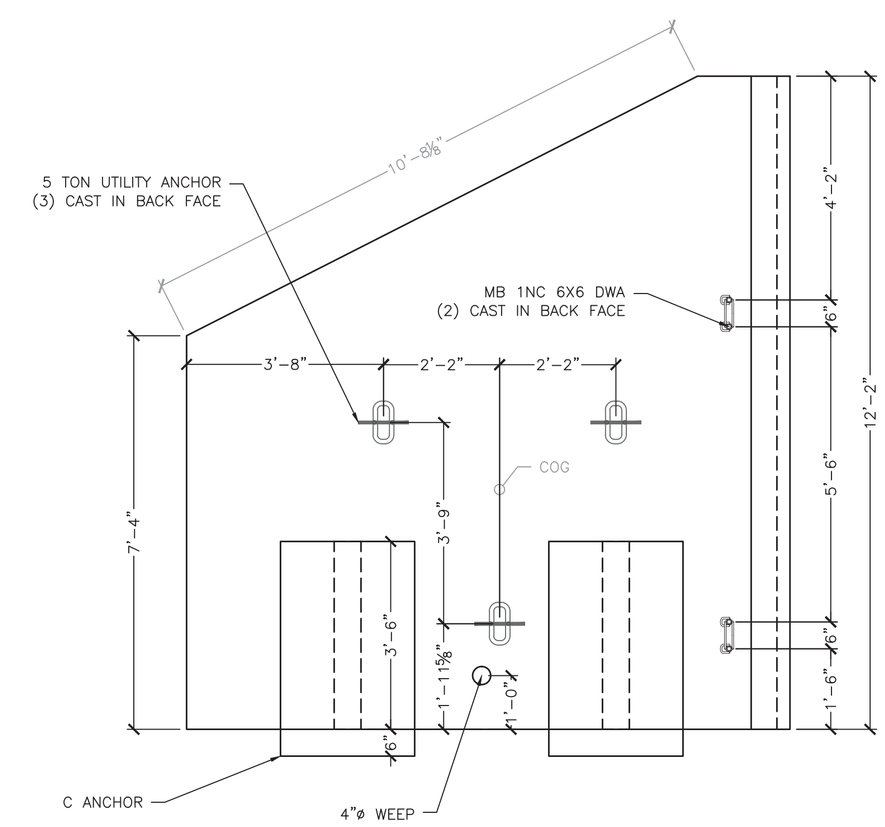

6 S6.0 WINGWALL WW2 ELEVATION VIEW
½" = 1'-0"

No.	Date	Revision	By
1	2/26/2015	Revised per EOR	PJL

STATE OF VERMONT
LICENSED PROFESSIONAL ENGINEER
No. 9031
Structural
5/12/15

MICHIE CORPORATION
173 BUXTON INDUSTRIAL DRIVE - PO BOX 870
HENNIKER, NH 03242
PHONE: 603-428-3218
FAX: 603-428-7426
WWW.MICHIECORP.COM

TH4 over Branch of Mill River - VTAOT STP 1443 (44)
BR No 37 - Shrewsbury, VT

12'-0" x 8'-0" Rigid Frame Bridge
Wigwalls WW1 and WW2 Details

Project No. 5576
Date: 12/24/2014
Designed by: PJL
Drawn by: PJL
Checked by: CFP
Scale: AS SHOWN

Prepared for:
Casella Construction
8 US4 East
Mendon VT 05701

DWG NO.
S6.0

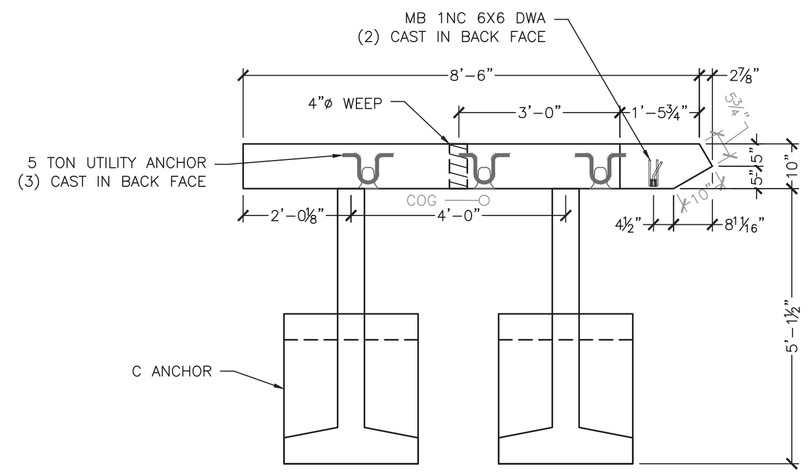

1 S7.0 WINGWALL WW3 PLAN VIEW
½" = 1'-0"

WW3 - 1 REQ'D

ITEM #275602
WALL: 2.51CY
C ANCHOR: 0.48CY/EA
TOTAL WT: 14,580#

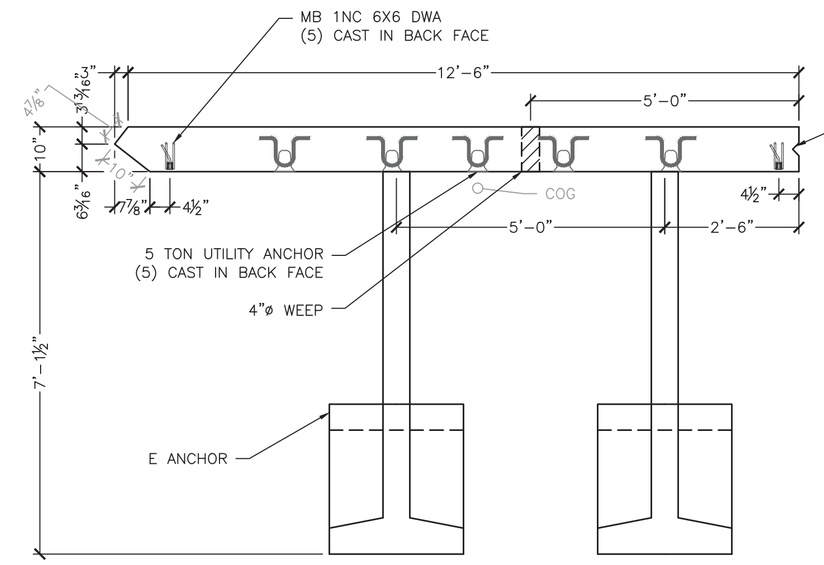

3 S7.0 WINGWALL WW4A PLAN VIEW
½" = 1'-0"

WW4A - 1 REQ'D

ITEM #275602
WALL: 4.66CY
E ANCHOR: 0.61CY/EA
TOTAL WT: 24,700#

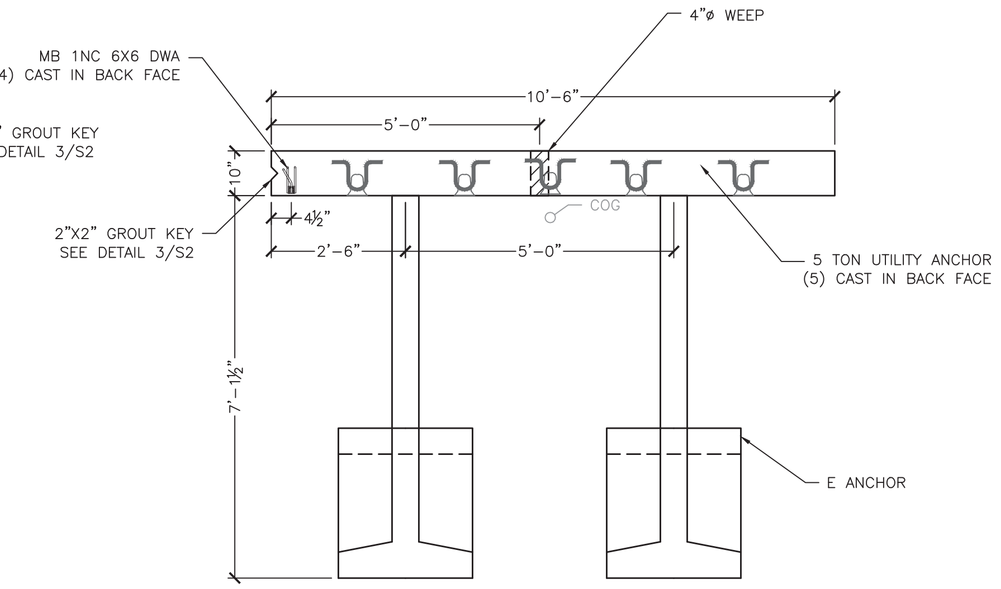

5 S7.0 WINGWALL WW4B PLAN VIEW
½" = 1'-0"

WW4B - 1 REQ'D

ITEM #275602
WALL: 3.94CY
E ANCHOR: 0.61CY/EA
TOTAL WT: 21,670#

NOTE:
USE MIDDLE TWO + BTM LIFTER FOR STRIPPING
USE TOP FOUR LIFTERS FOR SETTING IN FIELD

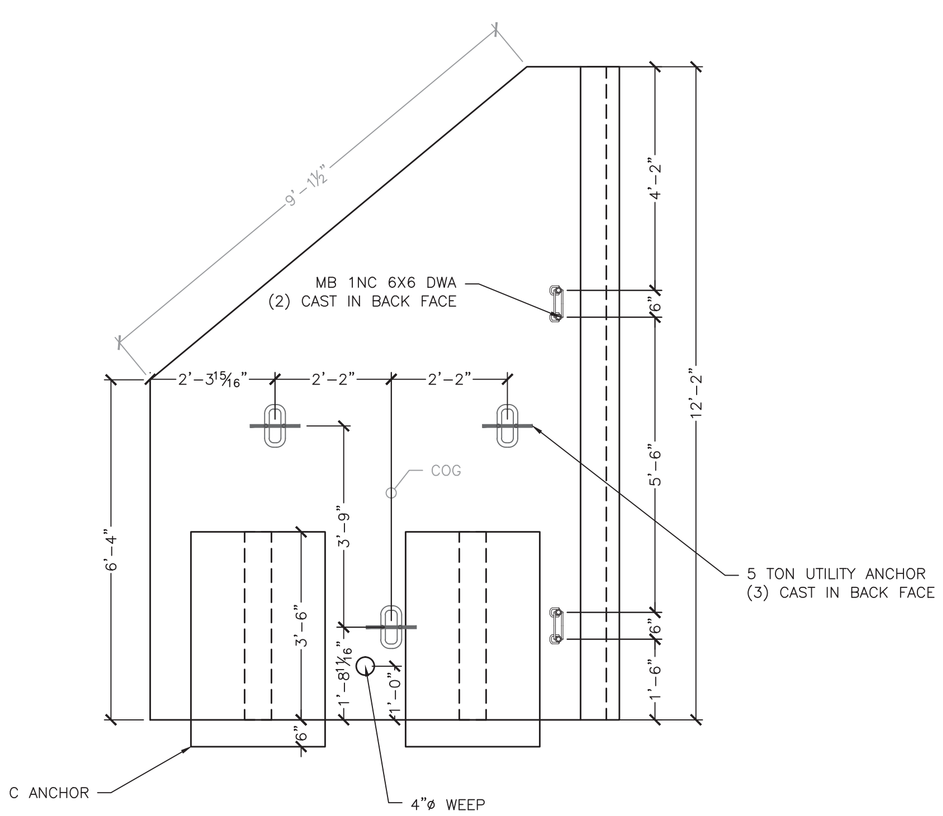

2 S7.0 WINGWALL WW3 ELEVATION VIEW
½" = 1'-0"

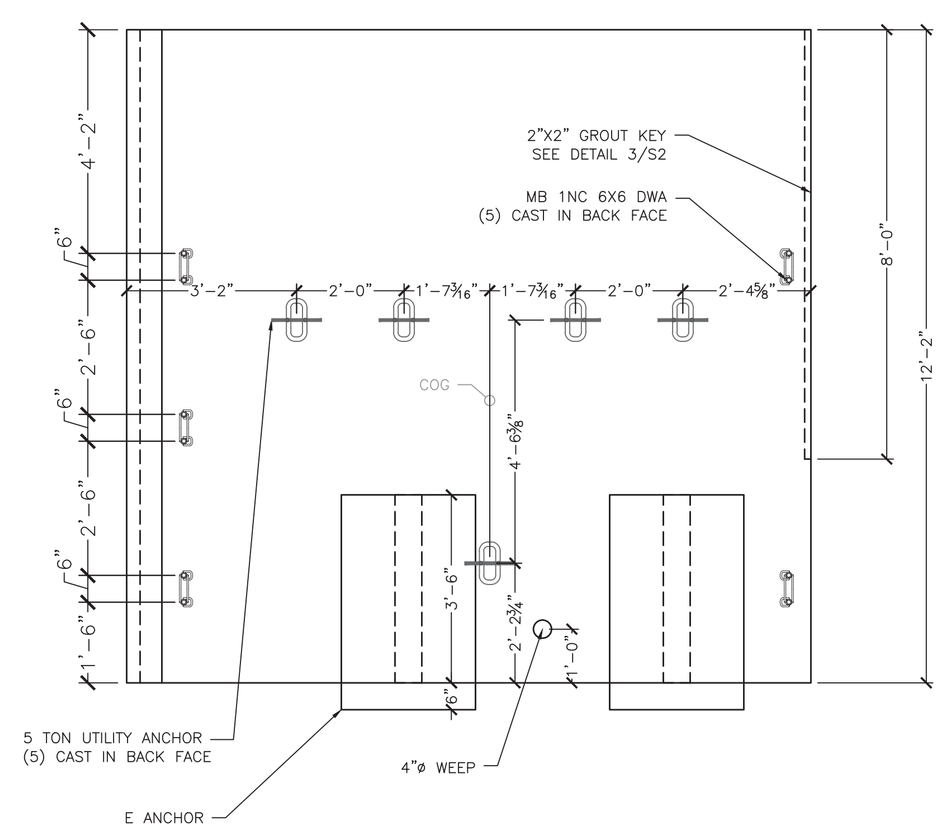

4 S7.0 WINGWALL WW4A ELEVATION VIEW
½" = 1'-0"

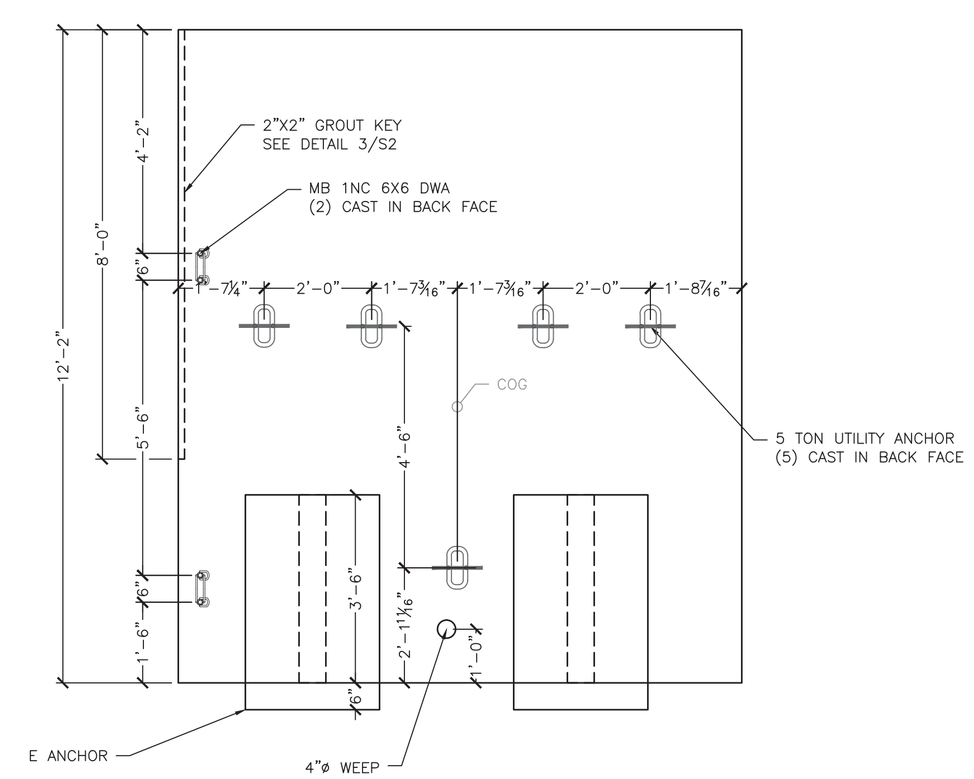

6 S7.0 WINGWALL WW4B ELEVATION VIEW
½" = 1'-0"

No.	Date	Revision	By
1	2/26/2015	Revised per EOR	PJL

STATE OF VERMONT
PAUL J. LEVESQUE
No. 9031
Structural I
Licensed Engineer
PROFESSIONAL ENGINEER
5/12/1

MICHIE CORPORATION
173 BUXTON INDUSTRIAL DRIVE - PO BOX 870
HENNIKER, NH 03242
PHONE: 603-428-3218
FAX: 603-428-7426
WWW.MICHIECORP.COM

TH4 over Branch of Mill River - VTAOT STP 1443 (44)
BR No 37 - Shrewsbury, VT

12'-0" x 8'-0" Rigid Frame Bridge
Wigwalls WW3 and WW4 Details

Project No. 5576
Date: 12/24/2014
Designed by: PJL
Drawn by: PJL
Checked by: CFP
Scale: AS SHOWN

Prepared for:
Casella Construction
8 US4 East
Mendon VT 05701

DWG NO.
S7.0

Delta 2015.059.003

Delta 2015.059.003

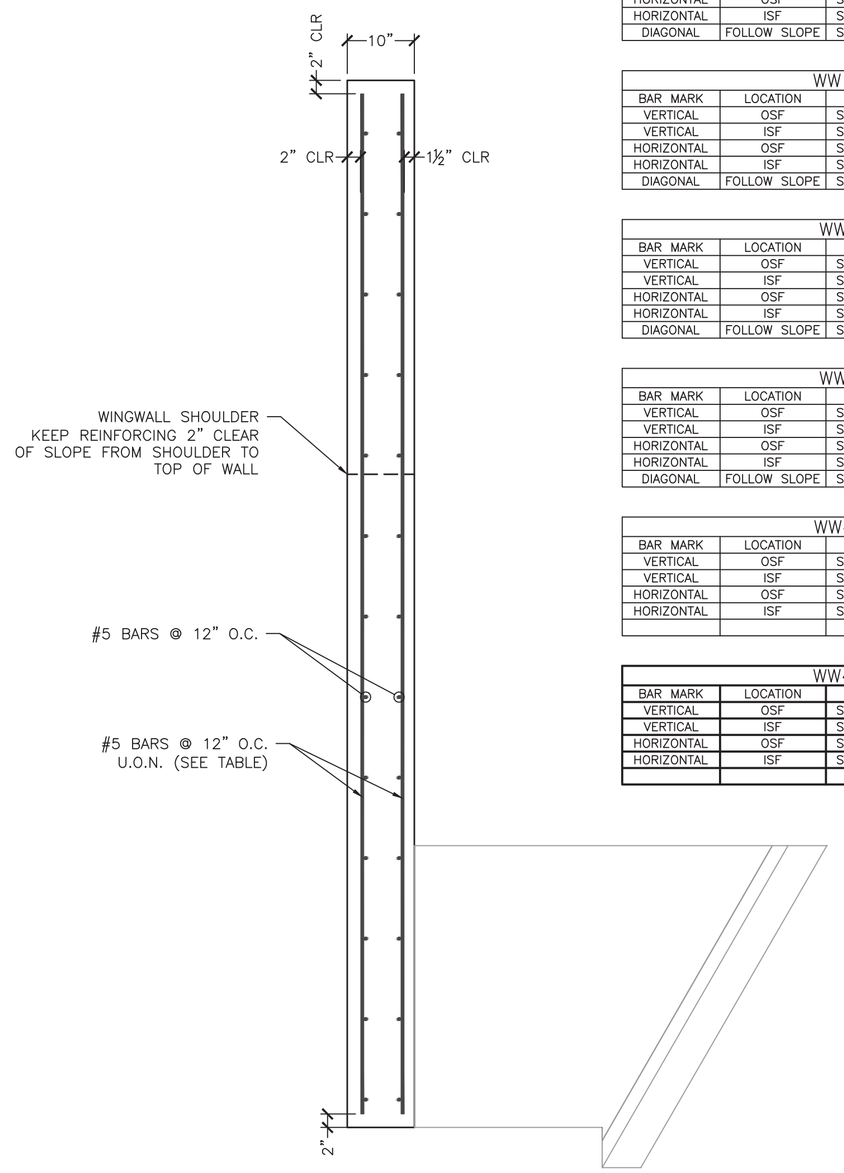

1 / S8.0 WINGWALL REINFORCING (TYP)
NTS

WW1A REINFORCING SCHEDULE					
BAR MARK	LOCATION	TYPE	SIZE/SPACING	CUT LENGTH	# OF PCS
VERTICAL	OSF	STRAIGHT	#5 @ 12"	VARIES 11'-10" TO 10'-10"	6
VERTICAL	ISF	STRAIGHT	**#6 @ 8"**	VARIES 11'-10" TO 10'-10"	9
HORIZONTAL	OSF	STRAIGHT	#5 @ 12"	5'-3½" LONGEST PIECE	12
HORIZONTAL	ISF	STRAIGHT	#5 @ 12"	5'-0½"	12
DIAGONAL	FOLLOW SLOPE	STRAIGHT	#5	4'-0"	2

WW1B REINFORCING SCHEDULE					
BAR MARK	LOCATION	TYPE	SIZE/SPACING	CUT LENGTH	# OF PCS
VERTICAL	OSF	STRAIGHT	#5 @ 12"	VARIES 10'-10" TO 8'-0"	11
VERTICAL	ISF	STRAIGHT	**#6 @ 8"**	VARIES 10'-10" TO 8'-0"	16
HORIZONTAL	OSF	STRAIGHT	#5 @ 12"	10'-2"	11
HORIZONTAL	ISF	STRAIGHT	#5 @ 12"	10'-2"	11
DIAGONAL	FOLLOW SLOPE	STRAIGHT	#5	10'-6½"	2

WW2 REINFORCING SCHEDULE					
BAR MARK	LOCATION	TYPE	SIZE/SPACING	CUT LENGTH	# OF PCS
VERTICAL	OSF	STRAIGHT	#5 @ 12"	VARIES 11'-10" TO 7'-0"	11
VERTICAL	ISF	STRAIGHT	#5 @ 12"	VARIES 11'-10" TO 7'-0"	11
HORIZONTAL	OSF	STRAIGHT	#5 @ 12"	10'-9½" LONGEST PIECE	12
HORIZONTAL	ISF	STRAIGHT	#5 @ 12"	10'-6½" LONGEST PIECE	12
DIAGONAL	FOLLOW SLOPE	STRAIGHT	#5	10'-6"	2

WW3 REINFORCING SCHEDULE					
BAR MARK	LOCATION	TYPE	SIZE/SPACING	CUT LENGTH	# OF PCS
VERTICAL	OSF	STRAIGHT	#5 @ 12"	VARIES 11'-10" TO 6'-0"	9
VERTICAL	ISF	STRAIGHT	#5 @ 12"	VARIES 11'-10" TO 6'-0"	8
HORIZONTAL	OSF	STRAIGHT	#5 @ 12"	8'-3½" LONGEST PIECE	12
HORIZONTAL	ISF	STRAIGHT	#5 @ 12"	8'-0½" LONGEST PIECE	12
DIAGONAL	FOLLOW SLOPE	STRAIGHT	#5	9'-0"	2

WW4A REINFORCING SCHEDULE					
BAR MARK	LOCATION	TYPE	SIZE/SPACING	CUT LENGTH	# OF PCS
VERTICAL	OSF	STRAIGHT	#5 @ 12"	11'-10"	13
VERTICAL	ISF	STRAIGHT	#5 @ 12"	11'-10"	12
HORIZONTAL	OSF	STRAIGHT	#5 @ 12"	12'-4" LONGEST PIECE	12
HORIZONTAL	ISF	STRAIGHT	#5 @ 12"	12'-0¼" LONGEST PIECE	12

WW4B REINFORCING SCHEDULE					
BAR MARK	LOCATION	TYPE	SIZE/SPACING	CUT LENGTH	# OF PCS
VERTICAL	OSF	STRAIGHT	#5 @ 12"	11'-10"	11
VERTICAL	ISF	STRAIGHT	**#6 @ 12"**	11'-10"	11
HORIZONTAL	OSF	STRAIGHT	#5 @ 12"	10'-2"	12
HORIZONTAL	ISF	STRAIGHT	#5 @ 12"	10'-2"	12

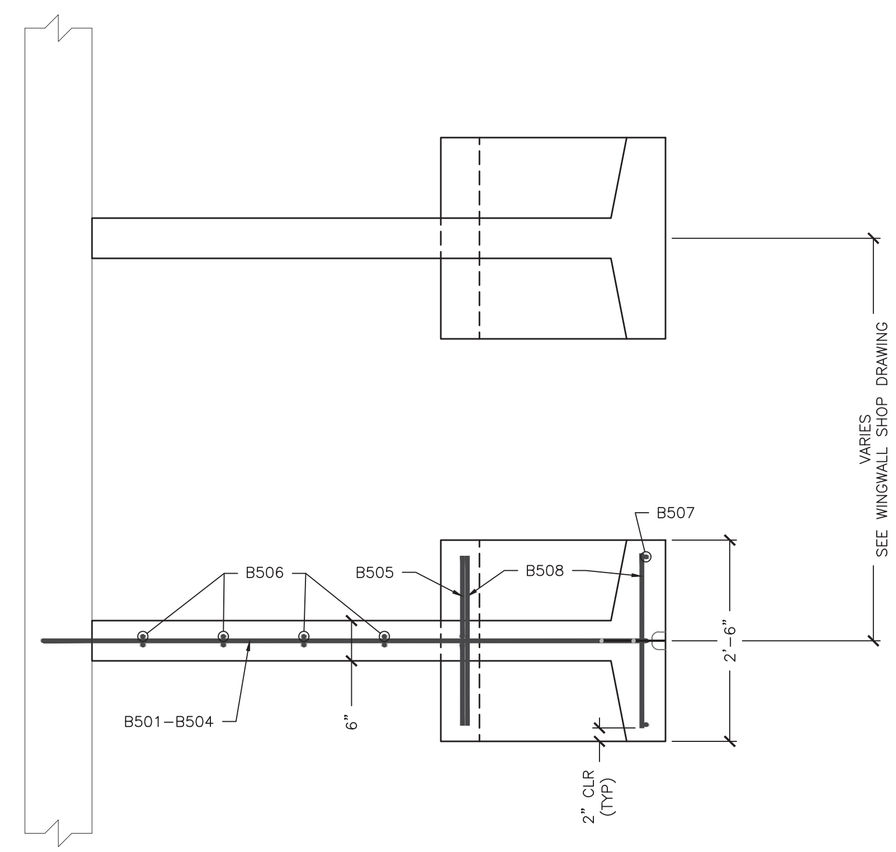

NOTE: REINFORCING SHOWN REPRESENTS "E" ANCHOR
OTHER ANCHOR REINFORCING SIMILAR

4 REQ'D

ANCHOR TYPE "B"					
CONCRETE QUANTITY				0.41 CY	
WEIGHT				1740 LB	
W1				1'-4"	
W2				3'-5⅜"	
X =	2'-2⅛"	Y=	1'-8⅜"		
BAR LIST					
MARK	QTY	SIZE	L	TYPE	LENGTH
B501	1	#5	4'-4½"	1	10'-1½"
B502	1	#5	4'-0½"	1	9'-5"
B503	1	#5	3'-8¼"	1	8'-9"
B504	1	#5	3'-0"	1	7'-4½"
B505	2	#5	3'-8"	2	4'-7"
B506	2	#5	----	STR	3'-2"
B507	4	#5	----	STR	4'-3½"
B508	7	#5	----	STR	2'-2"

4 REQ'D

ANCHOR TYPE "C"					
CONCRETE QUANTITY				0.48 CY	
WEIGHT				2010 LB	
W1				2'-4"	
W2				4'-5⅜"	
X =	2'-8¾"	Y=	1'-8½"		
BAR LIST					
MARK	QTY	SIZE	L	TYPE	LENGTH
B501	1	#5	5'-4½"	1	12'-1½"
B502	1	#5	5'-0½"	1	11'-5"
B503	1	#5	4'-8¼"	1	10'-9"
B504	1	#5	4'-0"	1	9'-4½"
B505	2	#5	3'-8"	2	4'-7"
B506	4	#5	----	STR	3'-2"
B507	4	#5	----	STR	4'-3½"
B508	7	#5	----	STR	2'-2"

ANCHOR TYPE "D"					
CONCRETE QUANTITY				0.54 CY	
WEIGHT				2285 LB	
W1				3'-4"	
W2				5'-5⅜"	
X =	3'-5⅛"	Y=	1'-8½"		
BAR LIST					
MARK	QTY	SIZE	L	TYPE	LENGTH
B501	1	#5	6'-4½"	1	14'-1½"
B502	1	#5	6'-0½"	1	13'-5"
B503	1	#5	5'-8¼"	1	12'-9"
B504	1	#5	5'-0"	1	11'-4½"
B505	2	#5	3'-8"	2	4'-7"
B506	6	#5	----	STR	3'-2"
B507	4	#5	----	STR	4'-3½"
B508	7	#5	----	STR	2'-2"

4 REQ'D

ANCHOR TYPE "E"					
CONCRETE QUANTITY				0.61 CY	
WEIGHT				2550 LB	
W1				4'-4"	
W2				6'-5⅜"	
X =	4'-0"	Y=	1'-8⅝"		
BAR LIST					
MARK	QTY	SIZE	L	TYPE	LENGTH
B501	1	#5	7'-4½"	1	16'-1½"
B502	1	#5	7'-0½"	1	15'-5"
B503	1	#5	6'-8¼"	1	14'-9"
B504	1	#5	6'-0"	1	13'-4½"
B505	2	#5	3'-8"	2	4'-7"
B506	8	#5	----	STR	3'-2"
B507	4	#5	----	STR	4'-3½"
B508	7	#5	----	STR	2'-2"

3 REQ'D

ANCHOR TYPE "F"					
CONCRETE QUANTITY				0.68 CY	
WEIGHT				2860 LB	
W1				5'-4"	
W2				7'-5⅜"	
X =	4'-7⅝"	Y=	1'-8⅝"		
BAR LIST					
MARK	QTY	SIZE	L	TYPE	LENGTH
B501	1	#5	8'-4½"	1	18'-1½"
B502	1	#5	8'-0½"	1	17'-5"
B503	1	#5	7'-8¼"	1	16'-9"
B504	1	#5	7'-0"	1	15'-4½"
B505	2	#5	3'-8"	2	4'-7"
B506	10	#5	----	Str.	3'-2"
B507	4	#5	----	Str.	4'-3½"
B508	7	#5	----	Str.	2'-2"

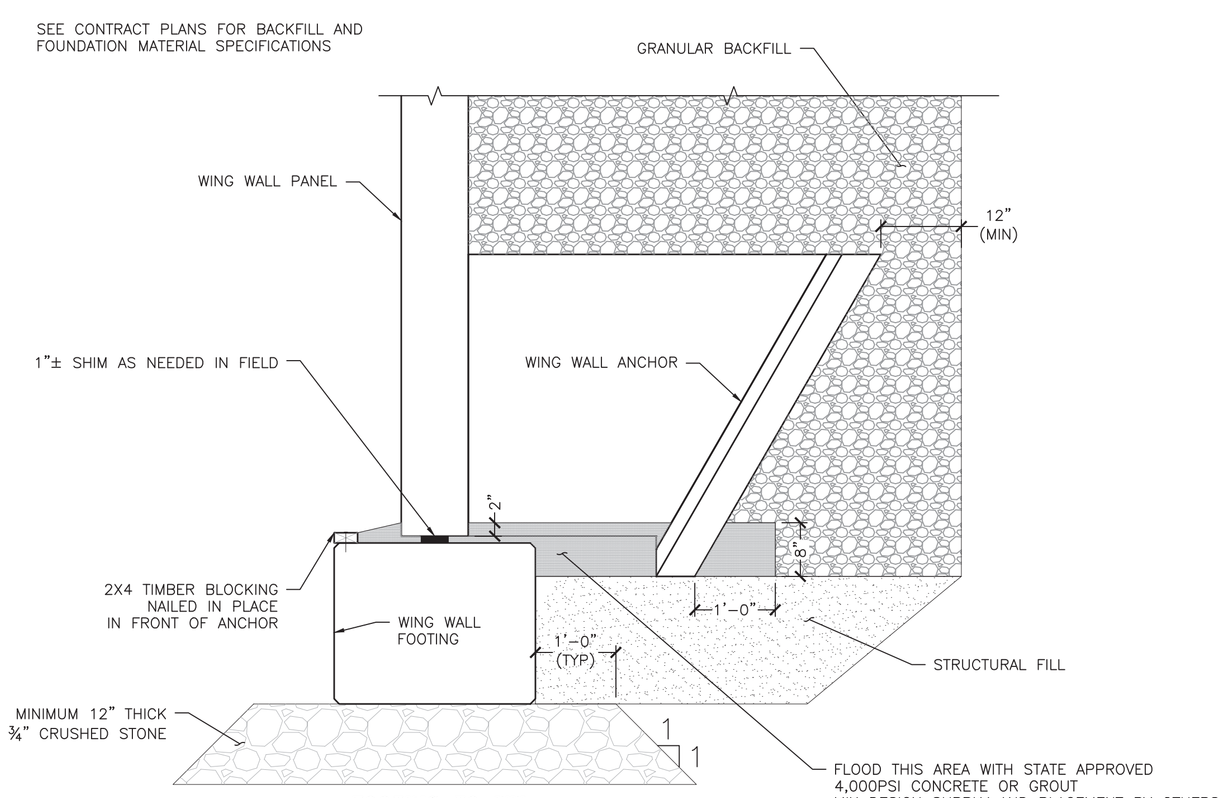

2 / S8.0 FOOTING TO WW ATTACHMENT DETAIL
NTS

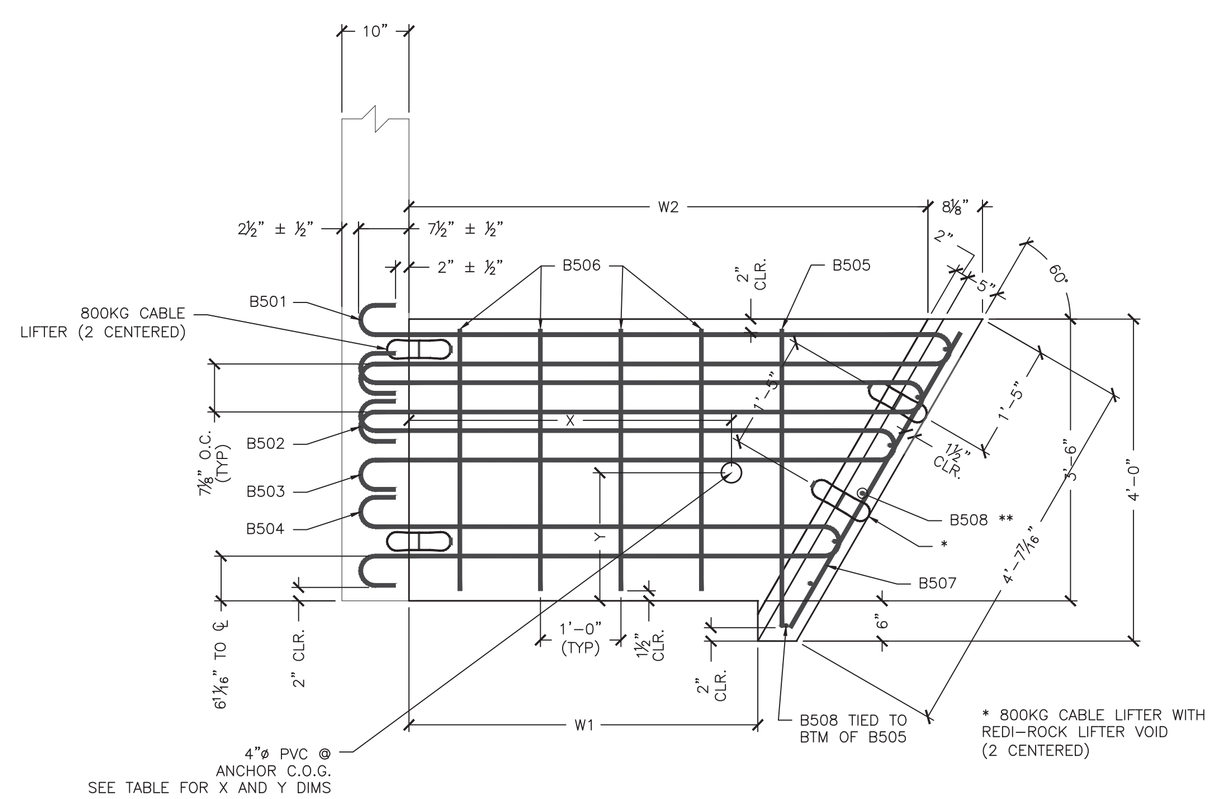

3 / S8.0 ANCHOR DETAIL
¾" = 1'-0"

** PLACE (1) B508 THROUGH EACH HOOP BARS,
(1) CENTERED BETWEEN HOOP BARS 503 & 504, AND
(2) BELOW B504 HOOP BAR W/ BOTTOM B508
2" CLEAR FROM BOTTOM (7 TOTAL)

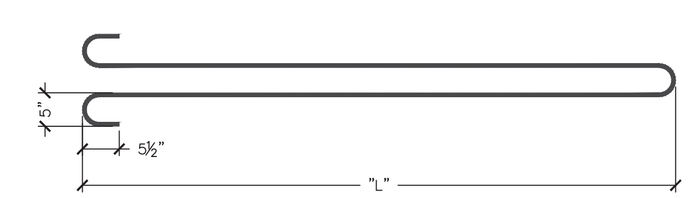

TYPE 1

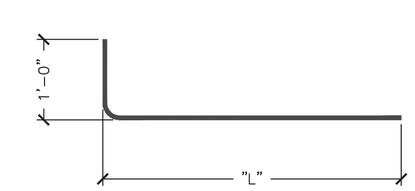

TYPE 2

No.	Date	Revision	By
1	2/26/2015	Revised per EOR	PJL

STATE OF VERMONT
PAUL J. LEVESQUE
No. 9031
Structural I
Licensed Professional Engineer
3/12/15

MICHIE CORPORATION
173 BUXTON INDUSTRIAL DRIVE - PO BOX 870
HENNIKER, NH 03242
PHONE: 603-428-3218
FAX: 603-428-7426
WWW.MICHIECORP.COM

TH4 over Branch of Mill River - VTAOT STP 1443 (44)
BR No 37 - Shrewsbury, VT
12'-0" x 8'-0" Rigid Frame Bridge
Anchor Details

Project No. 5576
Date: 12/24/2014
Designed by: PJL
Drawn by: PJL
Checked by: CFP
Scale: AS SHOWN

Prepared for:
Casella Construction
8 US4 East
Mendon VT 05701

DWG NO.
S8.0