PREQUALIFIED JOINT WELDING PROCEDURE
PROCEDURE SPECIFICATION

Material specification: A36
Welding process: SMAW
Manual or machine: MANUAL
Position of welding: ALL POSITIONS
Filler metal specification: E7018
Filler metal classification: LOW HYDROGEN
Flux: N/A
Flow rate:
Weld metal grade*:
Single or multiple pass: SINGLE MULTIPLE
Single or multiple arc: SINGLE
Welding current: DC
Polarity: REVERSE
Welding progression: 1G 2G & 4F
Root treatment: GRIND & WIRE BRUSH
Preheat and interpass temperature: 50°
Postheat treatment: NONE

*Applicable only when filler metal has no AWS classification.

WELDING PROCEDURE

Pass no.	Electrode size	Welding current		Travel speed	Joint detail
		Amperes	Volts		
2	5/32	180	30	4"/min	PILE SPLICE WELDING DETAIL

Contractor:

BLOW & COTE, INC.
315 VT Route 15 East
Morrisville, VT 05661

PROJECT:
CAMBRIDGE BRO 1448(39)
Submitted by:
MARC COTE

MAKU-BITE

Dimensions

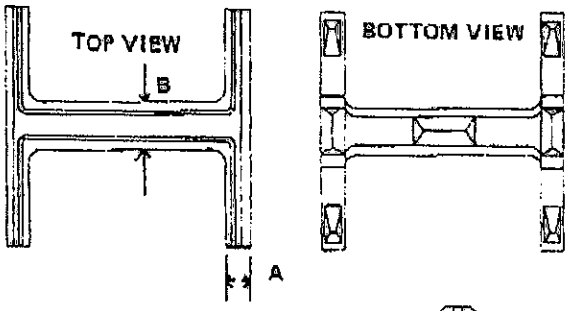

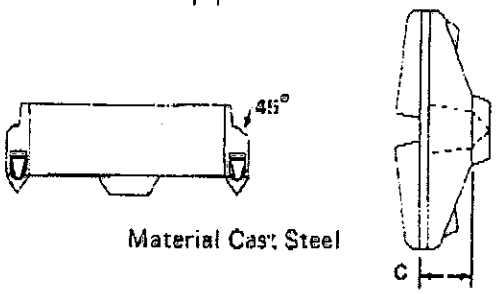

Material Cast Steel

	8"	10"	12"
A	1-1/16"	1"	1"
B	1"	1"	1-5/16"
C	1-7/8"	2-1/16"	2-1/2"

Installation Instructions

HARD-BITE POINT MODEL HP-77600-B

1. Fit point onto the end of a square cut pile end.
2. Weld point to the pile in either flat or vertical position using E60 or E70XX electrodes.
3. Weld across full width of flange following chart below for minimum size weld.

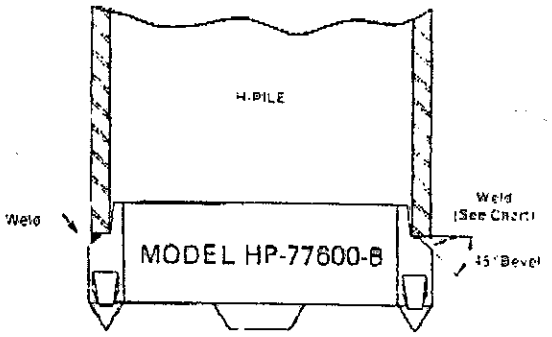

Pile Size	Flange Thickness	Min. Size Groove Weld
HP 14 x 117	.805	7/16
x 102	.705	3/8
x 89	.615	3/8
x 73	.505	5/16
HP 12 x 84	.685	3/8
x 74	.610	3/8
x 63	.515	5/16
x 53	.435	5/16
HP 10 x 57	.565	5/16
x 42	.420	5/16
HP 8 x 36	.445	5/16

Call toll free 800-526-9047

ASSOCIATED PILE & FITTING CORP.

BOX 1048, CLIFTON, N.J. 07014 ■ 201-773-8400

ATTACHMENT

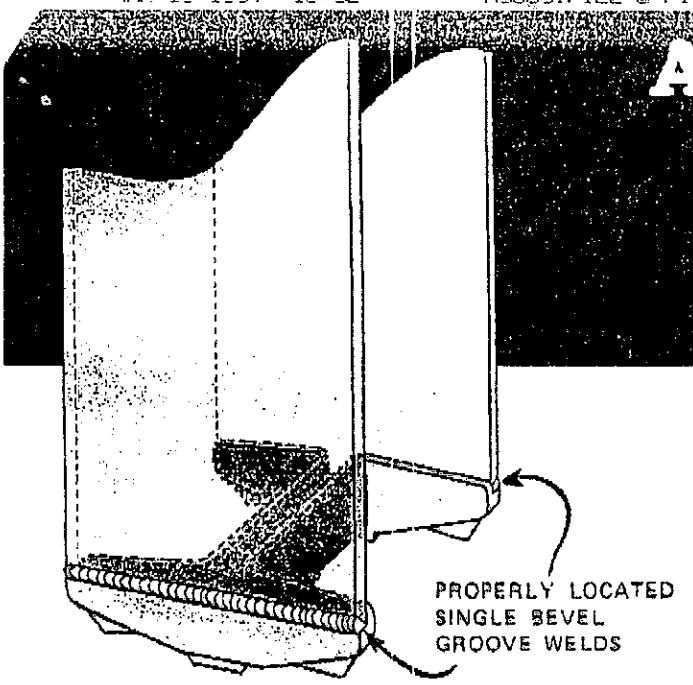

RELIABLE ATTACHMENT IS QUICK AND EASY

APF Cast Steel H-Pile Points are designed for ease of handling and attachment. The integrally cast back-ups for welding, position the point accurately on the pile. For proper load transfer, the points must be attached by a single bevel groove weld across the outside of each flange. With correct weld placement, the load transfers cleanly to the point. Welding along the inside of the flanges is not advisable as it creates a stress pattern which could prove detrimental to the integrity of the pile. An E60 or E70 rod is suggested for manual welding.

SIZE OF PILE		FLANGE THICKNESS (INCHES)	SIZE OF GROOVE WELD
HP 14	x 117	0.805	7/16"
	x 102	0.705	3/8"
	x 89	0.615	5/16"
	x 73	0.505	5/16"
HP 13	x 100	0.765	3/8"
	x 87	0.665	5/16"
	x 73	0.565	5/16"
	x 60	0.460	5/16"
HP 12	x 84	0.685	5/16"
	x 74	0.610	5/16"
	x 63	0.515	5/16"
	x 53	0.435	5/16"
HP 10	x 57	0.565	5/16"
	x 42	0.420	5/16"
HP 8	x 36	0.445	5/16"

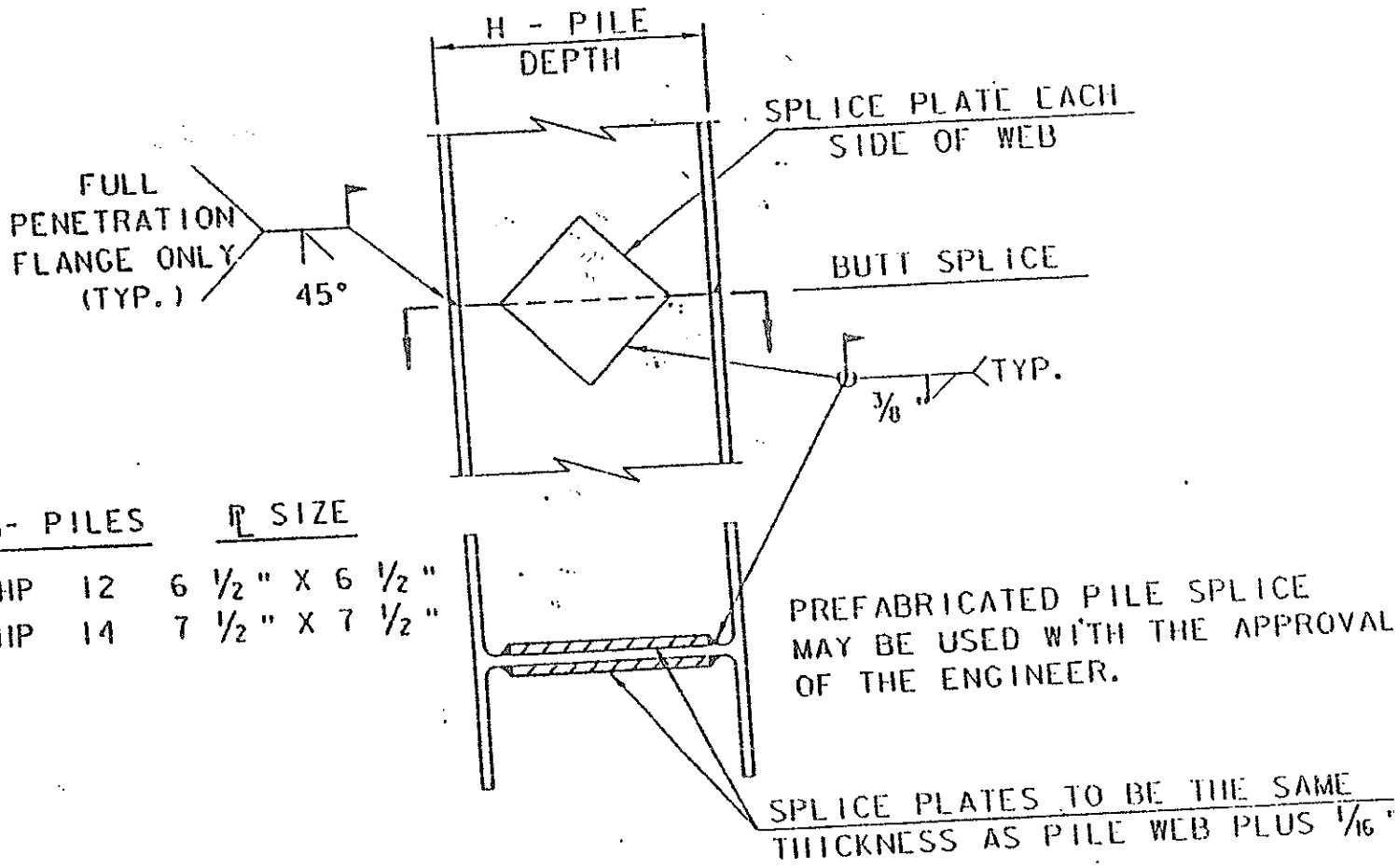

DETAIL OF PILE SPLICE

N.T.S.

CONTRACTOR:

BLOW & COTE, INC.
815 VT Route 15 East
Morrisville, VT 05661

PROJECT:

SUBMITTED BY:

MARC COTE

Work Log for Adam Thomann dba Spectrum Welding

Certified 12/31/2009

Worked for the following Vermont companies since 2009 on various Vermont projects that required a welding certification;
CCS Construction
Cote Steel Erectors
Quarry Industrial Services
Nops Metal Works
St. Onge Construction

Feb 2010
Kubricky Construction
Bridge Welding requiring certification.

August – September 2010
Dartmouth Medical Center - NH moment connections
CCS – White River Train Bridge

January – December 2011
Kubricky Construction
2 bridges in Ludlow Vermont requiring welding certification.

January – December 2012 & 2013
Cote Steel Erectors
Colchester Steel Building requiring welding certification.

November – December 2013, April – May 2014
Blow & Cote, Inc.
Bristol BRO 1445(32) – Pile Splices

August – 2014
The Belden Co.
Rutland BRF 3000(18) – Pile Splices

November – 2014
ECI Engineers Construction
Ryegate CULV(10)