PREQUALIFIED JOINT WELDING PROCEDURE
PROCEDURE SPECIFICATION

Material specification: GRADE 50
Welding process: SMAW
Manual or machine: Manual
Position of welding: All Positions
Filler metal specification: A5.1
Filler metal classification: E 7018
Flux: N/A
Weld metal grade*: —
Shielding gas: N/A Flow rate: —
Single or multiple pass: Multiple
Single or multiple arc: Single
Welding current: DC
Polarity: Reverse
Welding progression: tack 1"-3 locations ea flange then stringers bead alternating flanges & splice plates same
Root treatment: Grind and Wire Brush
Preheat and interpass temperature: Per AWS D1.5
Postheat treatment: none

*Applicable only when filler metal has no AWS classification.

WELDING PROCEDURE

Pass no.	Electrode size	Welding current		Travel speed	Joint detail
		Amperes	Volts		
ALL	5/32	180	30	4"/min	PILE SPLICE welding Detail (see attached)

CONTRACTOR: BLOW & COTE, INC.
815 VT RTE 15E
MORRISVILLE, VT 05661

PROJECT: CAMBRIDGE B20.1448 (3)

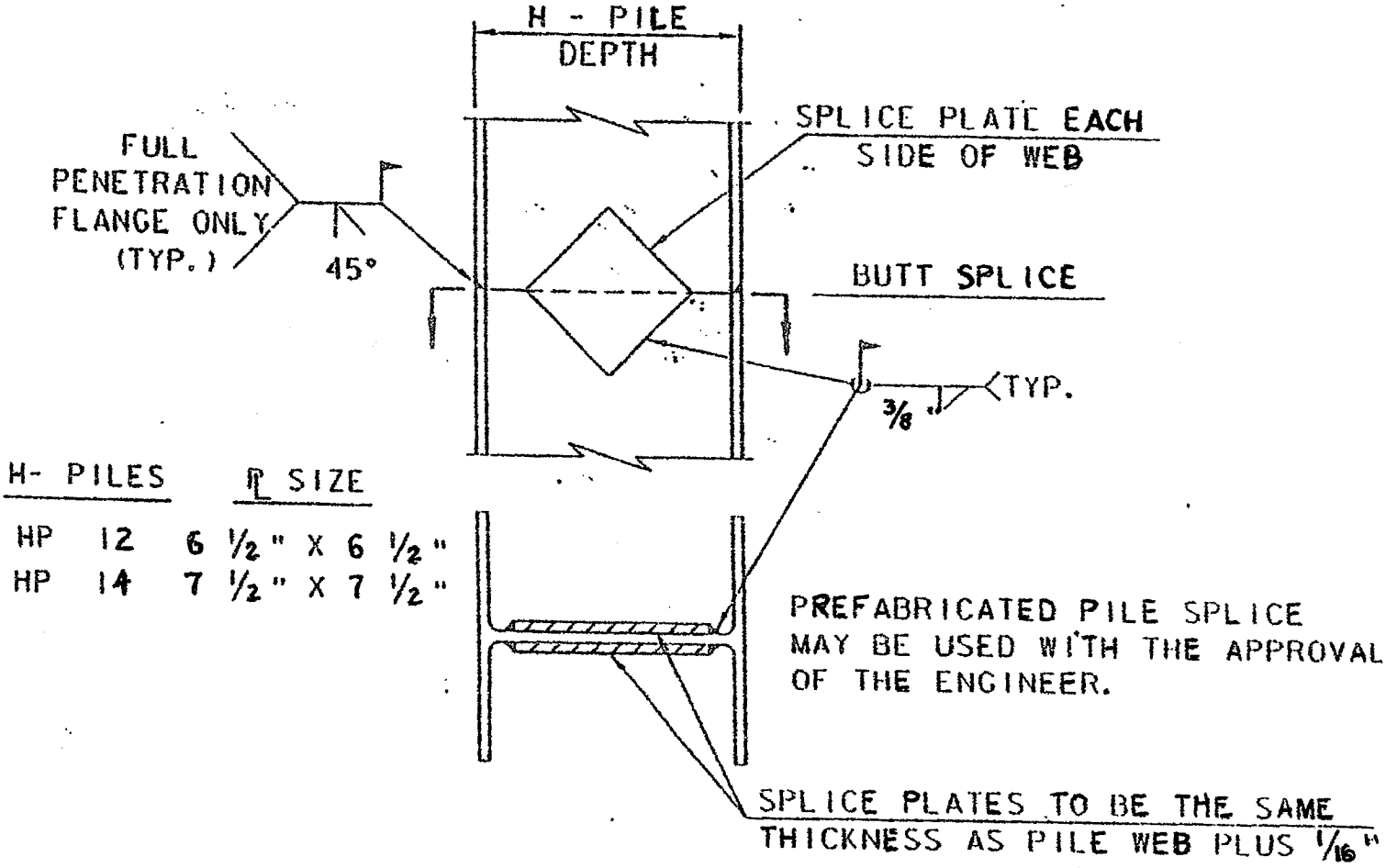

DETAIL OF PILE SPLICE

N.T.S.

CONTRACTOR:

BLOW & COTE, INC.
815 VT Route 15 East
Morrisville, VT 05661

PROJECT:

CAMBRIDGE BRO 1448(39)

SUBMITTED BY:

MARC COTE

PREQUALIFIED JOINT WELDING PROCEDURE
PROCEDURE SPECIFICATION

Material specification: Grade 50
Welding process: SMAW
Manual or machine: Manual
Position of welding: all Positions
Filler metal specification: A5.1
Filler metal classification: E7018
Flux: N/A
Weld metal grade*: —
Shielding gas: N/A Flow rate: —
Single or multiple pass: Multiple
Single or multiple arc: Single
Welding current: DC
Polarity: Reverse
Welding progression: Tack 1" 3 locations ea flange then stringer head alternating flanges
Root treatment: Grind and wire brush
Preheat and interpass temperature: Per AWS D1.5
Postheat treatment: none

*Applicable only when filler metal has no AWS classification.

WELDING PROCEDURE

Pass no.	Electrode size	Welding current		Travel speed	Joint detail
		Amperes	Volts		
All	5/32	180	30	4"/min	Pile Point welding Detail (see attached)

CONTRACTOR: BLOW & COTE, INC.
815 VT RTE 15E
MORRISVILLE, VT 05661

PROJECT: CAMBRIDGE
BRO 1458 (39)

BLOW & COTE, INC.
815 VT RTE 15E
MORRISVILLE, VT 05661

PROJECT: CAMBRIDGE
BRD 1448 (39)

HARD-BITE POINT

HP 77600-B, HP 77600-B-18#
HP 77600-B-30#, HP 77600-B-46#

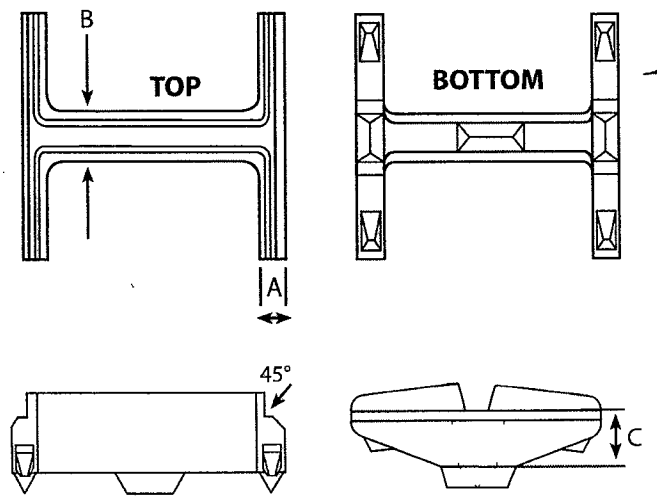

H-PILE POINT MODEL	A	B	C
14" HP			
77600-B	1"	1-1/4"	2-3/4"
77600-B-46#	1-1/2"	1-3/4"	3"
77750-B	1"	1"	4"
12" HP			
77600-B-30#	1"	1-5/16"	3"
77750-B	3/4"	3/4"	3-1/2"
7780-B	3/4"	3/4"	3"
10" HP			
77600-B	1"	1"	2-1/16"
77600-B-18#	1"	1-1/8"	2-3/8"
77750-B	3/4"	3/4"	3"
8" HP			
77600-B	1-1/16"	1"	1-7/16"

Installation Instructions

1.) Fit point onto the end of a square cut pile end.

2.) Weld point to the pile in either flat or vertical position using E70XX electrodes.

3.) Weld across full width of flange following chart below for minimum size weld.

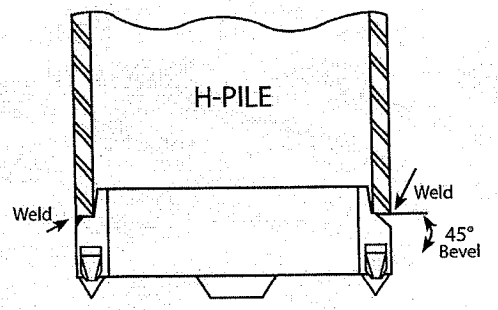

H-PILE SIZE	FLANGE THICKNESS	MINIMUM SIZE GROOVE WELD
HP 14		
x 117	.805	7/16
x 102	.705	3/8
x 89	.615	3/8
x 73	.505	5/16
HP 12		
x 84	.685	3/8
x 74	.610	3/8

H-PILE SIZE	FLANGE THICKNESS	MINIMUM SIZE GROOVE WELD
HP 12		
x 63	.515	5/16
x 53	.435	5/16
HP 10		
x 57	.565	5/16
x 42	.420	5/16
HP 8		
x 36	.445	5/16

All calculations and information should be double-checked by a qualified engineer.

AWS D1.5 2008

WELDER, WELDING OPERATOR OR TRACK WELDER QUALIFICATION TEST RECORD

Type of Welder

Name: Adam Thomann

Identification No.: AT-001

Welding Procedure Specification No. AT-001B

Date: 12/31/2009

Variables	Record Actual Values Used in Qualifications	Qualification Range
Process/Type	SMAW	
Electrode (single or multiple)	Single	
Current/Polarity	DCEP	
Position	3G	Flat/Horizontal/Vertical
Weld Progression	Uphill	uphill all passes
Backing (YES or NO)	Yes	
Material/Spec.		
Base Material	A36	
Thickness (Plate)	1" "	
Groove		1/8" - unlimited
Fillet		unlimited
Thickness: (Pipe/Tube)		
Groove		
Fillet		
Diameter: (Pipe)		
Groove		
Fillet		
Filler Metal	E7018	
Spec. No.	AWS A5.1 / A5.5	AWS A5.1 / A5.5
Class	E7018	E70XX
F-No.	F-4	F-4
Gas/Flux Type		
Other	5/32 " Lincoln Rod	

Visual Inspection Acceptable YES or NO

Guided Bend Test Results

Type	Results	Type	Results
Face		Face	
Root		Root	
Side	Accept	Side	Accept

Fillet Test Results

Appearance

Fracture Test Root Penetration

Fillet Size

Macro etch

(Describe the location, nature and size of any crack or tearing of specimen.)

Inspected by: Ed Loprete

Test No.: TA12312009

Organization: VT Nondestructive Testing

Date: 12/31/2009

Radiographic Results

Film Identification Number	Results	Remarks	Film Identification Number	Results	Remarks

Interpreted by:

Organization:

Test Number:

Date:

We, the undersigned, certify that the statements in this record are correct and that the test welds were prepared, welded and tested in accordance with the requirements of Section 5 of AWS D1.5, 2008 Bridge Welding Code

Inspected by: Richard F.Irick AWS/CWI

Witnessed by: Ed Loprete

Certification Property of Adam Thomann

Date: 12/31/2009

AWS QC 1 RICHARD F. IRICK 99060221 CWI

VT Nondestructive Testing

Work Log for Adam Thomann dba Spectrum Welding
Certified 12/31/2009
Updated 1/24/2015

Feb 2010
Kubricky Construction
Bridge Welding requiring certification. SMAW

June – August 2010
St Onge Construction
Leroy Farr Bridge – Pile Splices. SMAW

August – September 2010
Dartmouth Medical Center - NH moment connections
CCS – White River Train Bridge

January – December 2011
Kubricky Construction
2 bridges in Ludlow Vermont requiring welding certification. SMAW, FCAW

January – December 2012 & 2013
Cote Steel Erectors
Colchester Steel Building requiring welding certification.

November – December 2013, April – May 2014
Blow & Cote, Inc.
Bristol BRO 1445(32) – Pile Splices. SMAW

August – 2014
The Belden Co.
Rutland BRF 3000(18) – Pile Splices. SMAW,

November – 2014
ECI Engineers Construction
Ryegate CULV(10) Pile Splices. SMAW

January 9 – 24 2015
PC Construction Co.
Middlebury Field House – Handrails, Stairs, Structural welding steel beams. SMAW