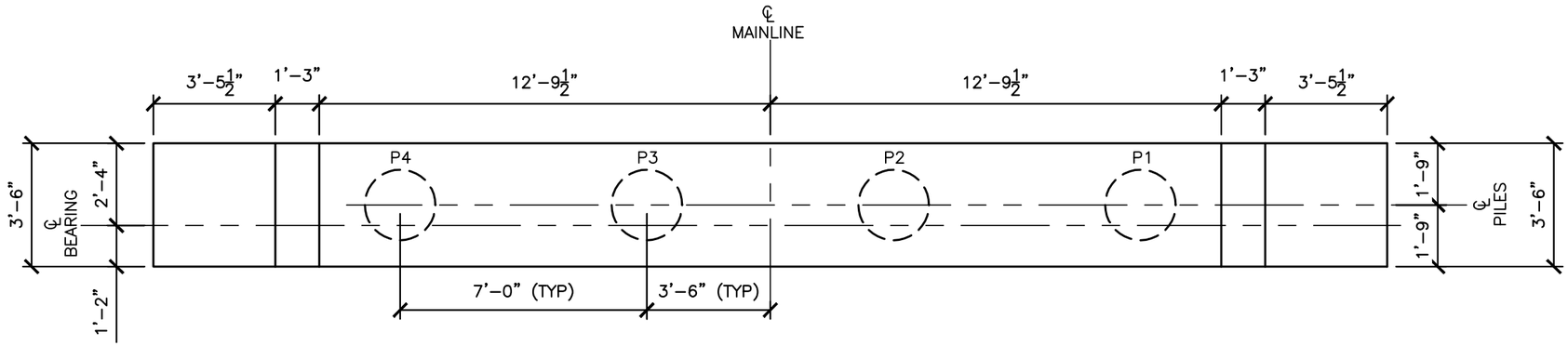

TYPICAL ABUTMENT PLAN

SCALE: 1/4"=1'-0"

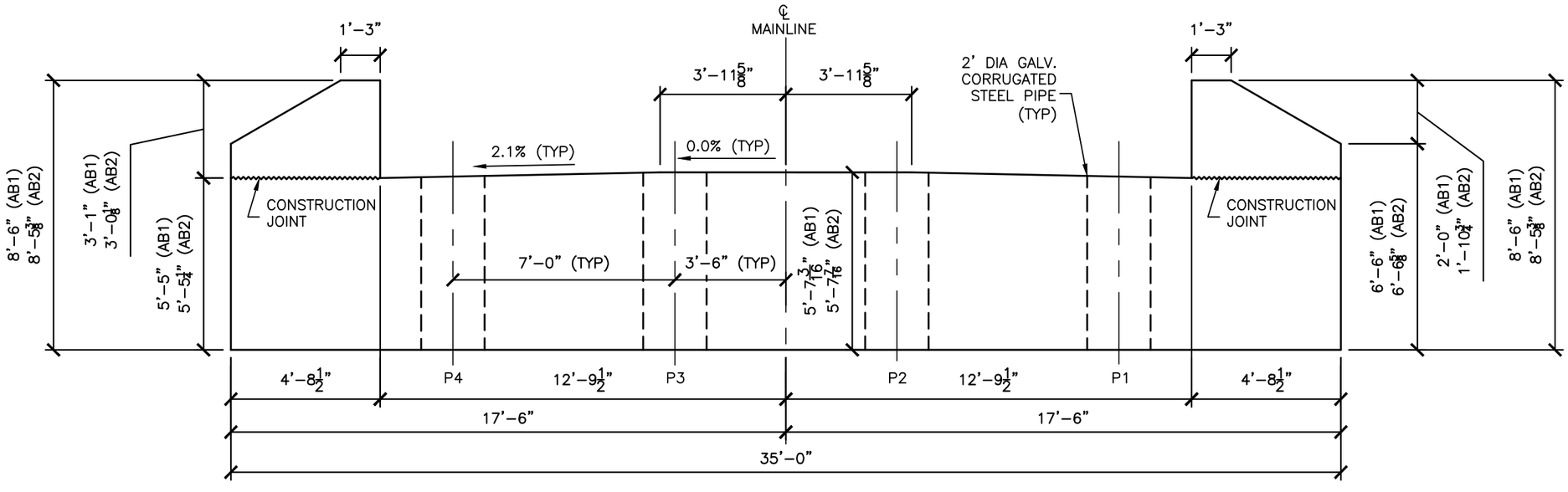

TYPICAL ABUTMENT ELEVATION

SCALE: 1/4"=1'-0"

1

PREPARED BY: KFM
CHECKED BY: TRF
DATE: 05/20/15

CAMBRIDGE BRO 1448(39)
Abutments #1 and #2

Cambridge, VT

T.R. FELLOWS
VT NH
ENGINEERING
CIVIL - STRUCTURAL
134 COUNTY ROAD
P.O. BOX 428
WALPOLE, NH 03608
TEL/FAX: 603.756.4811
trfel@myfairpoint.net
PO BOX 56
ROCHESTER, VT 05767
TEL: 802.318.7853
FAX: 866.593.8131
kricket@mapleridgevt.com

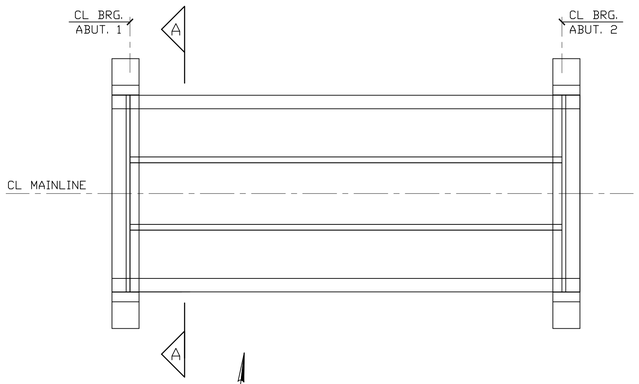

DECK PLAN

CONTRACT DWG. REF. 16

LIST 1 (F.F.) (2 THUS)

3 #6 X 8'-0" (Z) F.F.
1 #6 X 7'-10" (Z) F.F.
1 #6 X 7'-7" (Z) F.F.
1 #6 X 7'-3" (Z) F.F.
1 #6 X 7'-0" (Z) F.F.
1 #6 X 6'-8" (Z) F.F.
1 #6 X 6'-5" (Z) F.F.
1 #6 X 6'-1" (Z) F.F.

LIST 3 (F.F.) (2 THUS)

3x1 #5 X 4'-2" (Z) F.F.
1 #5 X 3'-8" (Z) F.F.
1 #5 X 2'-9" (Z) F.F.
1 #5 X 1'-11" (Z) F.F.

LIST 2 (N.F.) (2 THUS)

2 #5 X 8'-0" (Z) N.F.
1 #5 X 7'-10" (Z) N.F.
1 #5 X 7'-3" (Z) N.F.
1 #5 X 6'-8" (Z) N.F.
1 #5 X 6'-1" (Z) N.F.

LIST 4 (N.F.) (2 THUS)

1 #5 X 4'-2" (Z) N.F.
1 #5 X 3'-8" (Z) N.F.
1 #5 X 1'-11" (Z) N.F.

Release Number:					BAR LIST												
Bar Mark	Qty	Size	Total Length	Type	'A'	'B'	'C'	'D'	'E'	'F'	'G'	'H'	'J'	'K'	'O'	'R'
5AZ01	46	#5	8'-8"	17		2'-10"	3'-0"	2'-10"								
5AZ02	4	#5	4'-9"	3		0'-11"	3'-10"					1'-11"		3'-4"	4'-3"	
6AZ01	8	#6	7'-5 ½"	3			2'-11 ¾"	1'-6"	2'-11 ¾"			2'-7"		1'-6"	4'-6"	

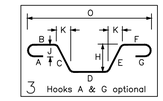

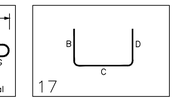

LIFTING POINT LOCATIONS & ANCHORS
- BY OTHERS/G.C.

4 #7 SHEAR BAR FOR WIRE ANCHORS
4 #7 X 4'-0" (Z) TOTAL

BAR MARKS MAY CHANGE, DUE TO REVISIONS

APPROVED
T.R. FELLOWS ENGINEERING
05/21/2015

LEGEND:
CONT.-CONTINUOUS
TRANS.-TRANSVERSE
DWLS.-DOWELS
VERTS.-VERTICAL
HORIZ.-HORIZONTAL
T&B -TOP & BOTTOM
I.F.-INNER FACE
O.F.-OUTER FACE
E.E.-EACH END
E.F.-EACH FACE
N.F.-NEAR FACE
F.F.-FAR FACE
E.W.-EACH WAY
O.C.-ON CENTER
L.W.-LONG WAY
S.W.-SHORT WAY

FOR APPROVAL

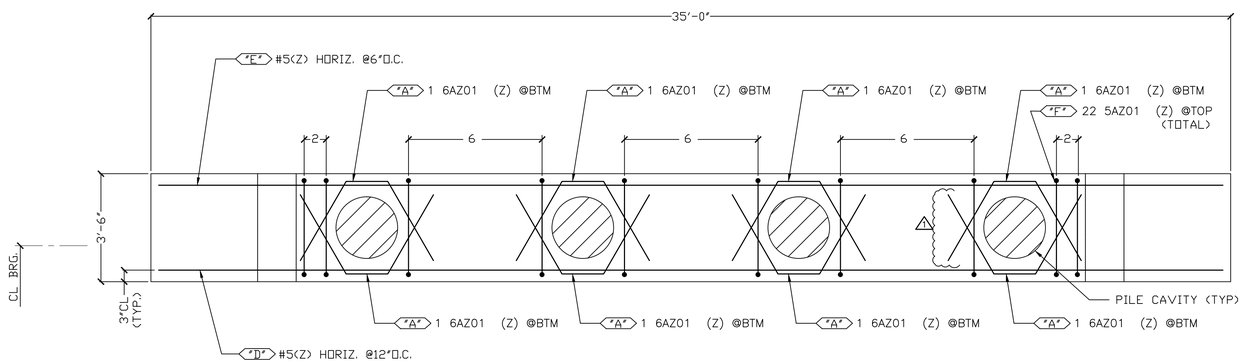

ABUTMENT #1 PLAN

(VERTICALS NOT SHOWN FOR CLARITY)
CONTRACT DWG. REF. 20

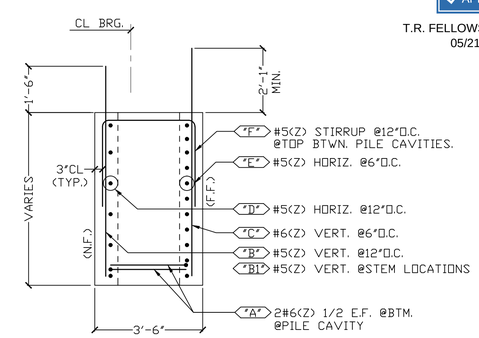

SECTION 1

(REINF. @ BRIDGE SEAT)
CONTRACT DWG. REF. 20

LAP CHART	
#5, #6	2'-7" (U.N.)

ALL REINF. BARS
LEVEL II - DUAL COATED

ELEVATIONS & DIMENSIONS SHOWN ON THIS DWG. ARE FOR REINF. DETAILING PURPOSES ONLY AND ARE NOT INTENDED FOR DIMENSIONAL CONSTRUCTION.

DUAL COATED REINF. BARS ASTM A615 GRADE 60, MARKED (Z)

VERIFICATION OF UNCLEAR INFORMATION MAY BE REQUESTED ON THIS DRAWING. SHOULD VERIFICATION BE LEFT UN-ADDRESSED IT WILL REMAIN AS SHOWN AND ASSUME TO BE CORRECT.

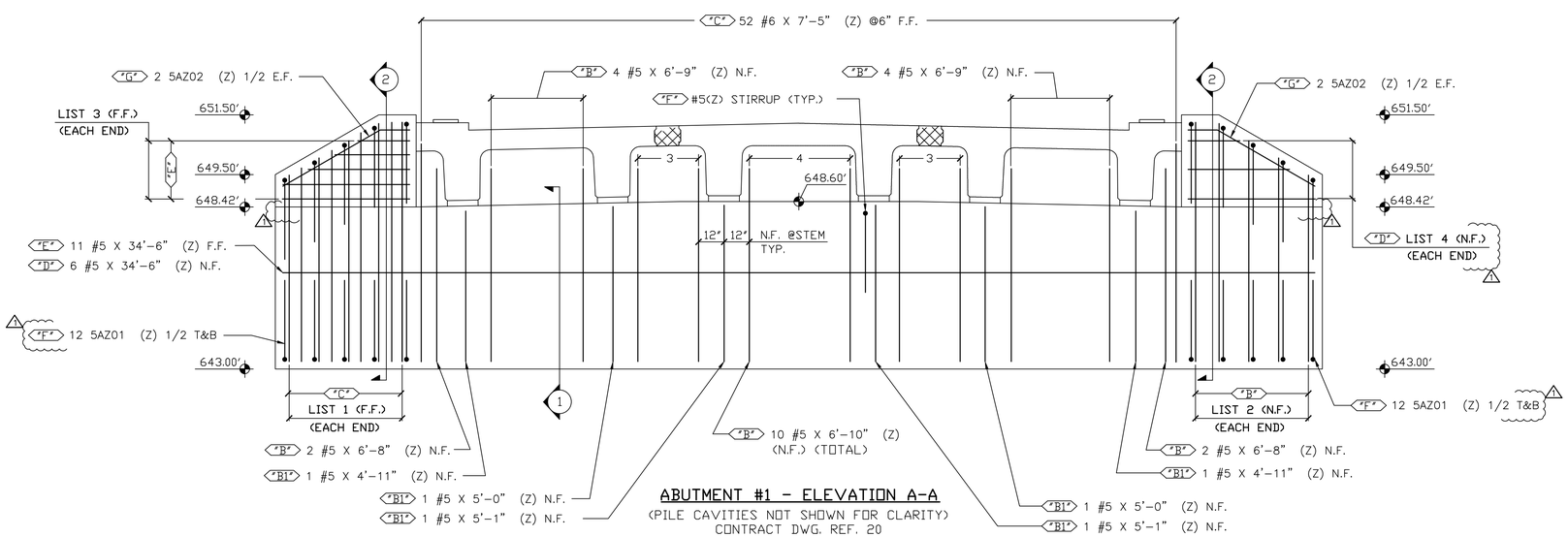

ABUTMENT #1 - ELEVATION A-A

(PILE CAVITIES NOT SHOWN FOR CLARITY)
CONTRACT DWG. REF. 20

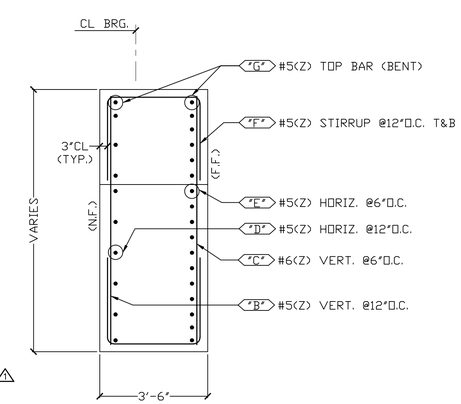

SECTION 2

(REINF. @ CHEEK WALL)
CONTRACT DWG. REF. 20

6			
5			
4			
3			
2	5/21/15		REVISED PER APPROVAL
1	1/29/15	–	FOR APPROVAL
	DATE	REV.#	SENT FOR

DIMENSION
DIMENSION FABRICATORS INC.
2000 7TH STREET
SCOTIA, N.Y. 12302
PH: (518) 374-1936
FAX (518) 374-4830
www.dimensionfabricators.com

STRUCTURE	VTAOT CAMBRIDGE BRO 1448(39)
LOCATION	CAMBRIDGE, VERMONT
ARCHITECT	
ENGINEER	
CUSTOMER	BLOW & COTE, INC.
DRAWN BY: KRIS J	DATE: 1/23/15 — DFI #: 9127
DRAWING COVERS: WEST ABUTMENT #1	DRAWING #: A

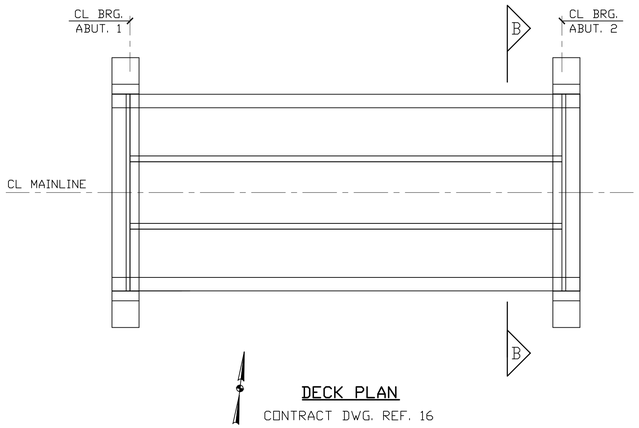

DECK PLAN

CONTRACT DWG. REF. 16

LIST 1 (F.F.) (2 THUS)

3 #6 X 7'-11" (Z) F.F.
1 #6 X 7'-10" (Z) F.F.
1 #6 X 7'-6" (Z) F.F.
1 #6 X 7'-3" (Z) F.F.
1 #6 X 7'-0" (Z) F.F.
1 #6 X 6'-9" (Z) F.F.
1 #6 X 6'-5" (Z) F.F.
1 #6 X 6'-2" (Z) F.F.

LIST 3 (F.F.) (2 THUS)

3x1 #5 X 4'-2" (Z) F.F.
1 #5 X 3'-8" (Z) F.F.
1 #5 X 2'-9" (Z) F.F.
1 #5 X 1'-10" (Z) F.F.

LIST 2 (N.F.) (2 THUS)

2 #5 X 7'-11" (Z) N.F.
1 #5 X 7'-10" (Z) N.F.
1 #5 X 7'-3" (Z) N.F.
1 #5 X 6'-9" (Z) N.F.
1 #5 X 6'-2" (Z) N.F.

LIST 4 (N.F.) (2 THUS)

1 #5 X 4'-2" (Z) N.F.
1 #5 X 3'-8" (Z) N.F.
1 #5 X 1'-10" (Z) N.F.

Release Number:							BAR LIST										
Bar Mark	Qty	Size	Total Length	Type	'A'	'B'	'C'	'D'	'E'	'F'	'G'	'H'	'J'	'K'	'O'	'R'
5BZ01	46	#5	8'-8"	17		2'-10"	3'-0"	2'-10"								
5BZ02	4	#5	4'-7 ¼"	3		0'-11"	3'-8 ¾"					1'-9 ½"		3'-3 ½"	4'-2 ½"	
6BZ01	8	#6	7'-5 ½"	3			2'-11 ¾"	1'-6"	2'-11 ¾"			2'-7"		1'-6"	4'-6"	

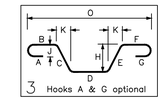

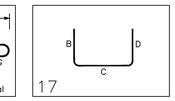

LIFTING POINT LOCATIONS & ANCHORS
- BY OTHERS/G.C.

4 #7 SHEAR BAR FOR WIRE ANCHORS
4 #7 X 4'-0" (Z) TOTAL

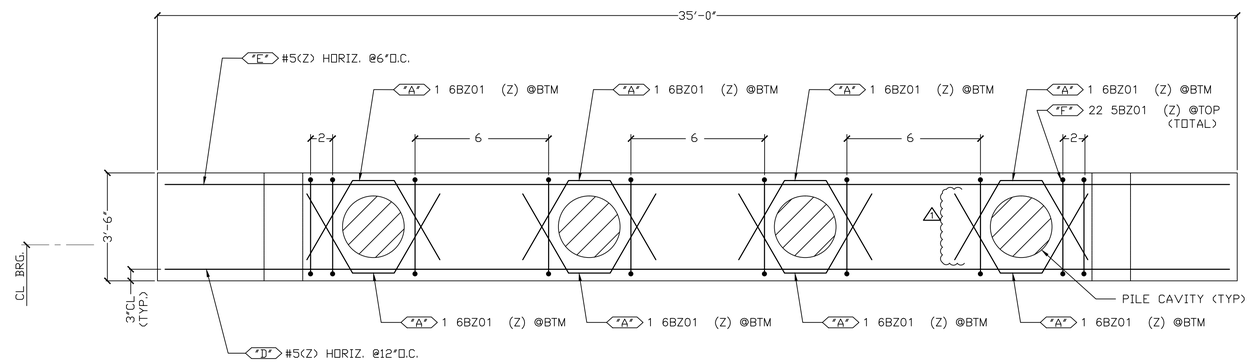

ABUTMENT #2 PLAN

(VERTICALS NOT SHOWN FOR CLARITY)
CONTRACT DWG. REF. 20

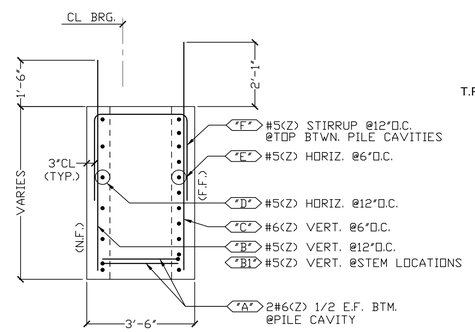

SECTION 1

(REINF. @ BRIDGE SEAT)
CONTRACT DWG. REF. 20

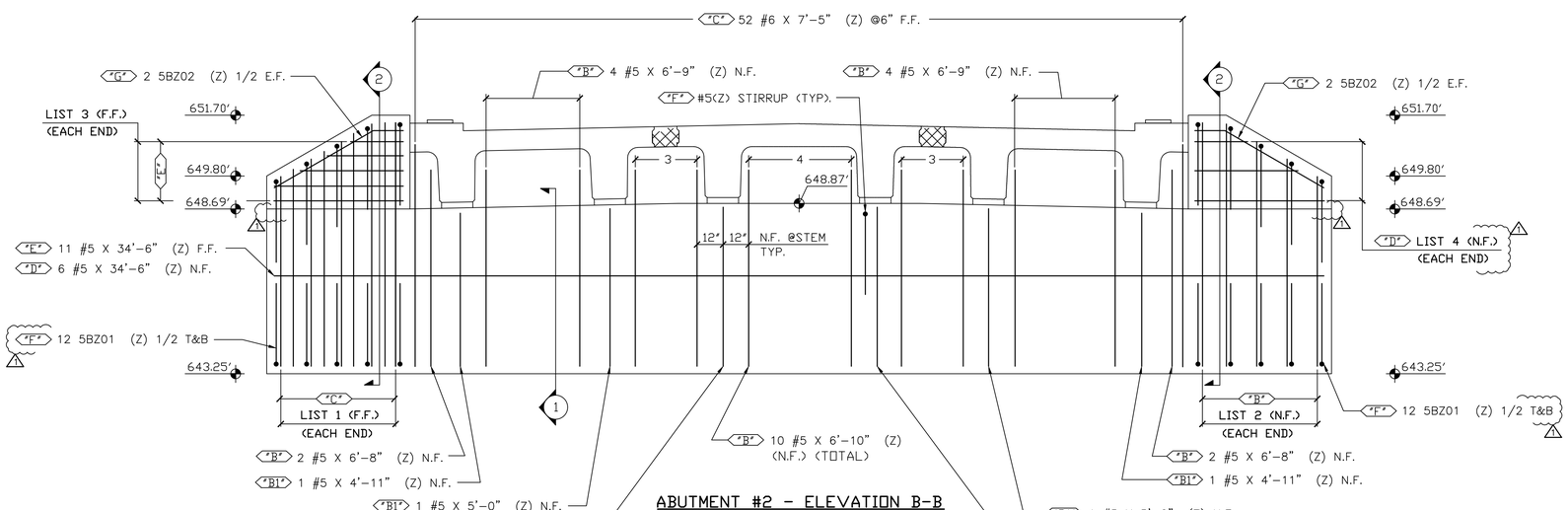

ABUTMENT #2 - ELEVATION B-B

(PILE CAVITIES NOT SHOWN FOR CLARITY)
CONTRACT DWG. REF. 20

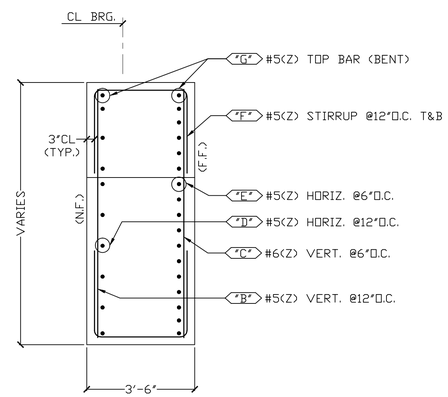

SECTION 2

(REINF. @ CHEEK WALL)
CONTRACT DWG. REF. 20

APPROVED
T.R. FELLOWS ENGINEERING
05/21/2015

FOR APPROVAL

LEGEND:

CONT.-CONTINUOUS
TRANS.-TRANSVERSE
DWLS.-DOWELS
VERTS.-VERTICAL
HORIZ.-HORIZONTAL
T&B -TOP & BOTTOM
I.F.-INNER FACE
O.F.-OUTER FACE
E.E.-EACH END
E.F.-EACH FACE
N.F.-NEAR FACE
F.F.-FAR FACE
E.W.-EACH WAY
O.C.-ON CENTER
L.W.-LONG WAY
S.W.-SHORT WAY

LAP CHART	
#5, #6	2'-7" (U.N.)

ALL REINF. BARS
LEVEL II - DUAL COATED

ELEVATIONS & DIMENSIONS SHOWN ON THIS DWG. ARE FOR REINF. DETAILING PURPOSES ONLY AND ARE NOT INTENDED FOR DIMENSIONAL CONSTRUCTION.

DUAL COATED REINF. BARS ASTM A615 GRADE 60, MARKED (Z)

VERIFICATION OF UNCLEAR INFORMATION MAY BE REQUESTED ON THIS DRAWING. SHOULD VERIFICATION BE LEFT UN-ADDRESSED IT WILL REMAIN AS SHOWN AND ASSUME TO BE CORRECT.

	DATE	REV.#	SENT FOR
6			
5			
4			
3			
2	5/21/15	1	REVISED PER APPROVAL
1	1/29/15	–	FOR APPROVAL

DIMENSION
DIMENSION FABRICATORS INC.
2000 7TH STREET
SCOTIA, N.Y. 12302
PH: (518) 374-1936
FAX (518) 374-4830
www.dimensionfabricators.com

STRUCTURE	VTAOT CAMBRIDGE BRO 1448(39)
LOCATION	CAMBRIDGE, VERMONT
ARCHITECT	
ENGINEER	
CUSTOMER	BLOW & COTE, INC.
DRAWN BY: KRIS J	DATE: 1/23/15 — DFI #: 9127
DRAWING COVERS: EAST ABUTMENT #2	DRAWING #: B

STATE OF VERMONT
AGENCY OF TRANSPORTATION
MATERIAL AND RESEARCH SECTION - STRUCTURAL CONCRETE UNIT

STRUCTURAL CONCRETE MIX DESIGN SUBMISSION

Agency Use Only	
Mix ID	PP00-0
Mix Design #	
Approved by	
Approved Date	
Spec Book Year	2011

Concrete class: Precast Prestressed
Additional Description
Ready Mix Supplier: HARRISON REDI-MIX, GEORGIA, VT
Designed By Todd Nelson
Design strength 5000 PRECAST PSI
Mix Design Style: Conventional
Agg weight - SSD or Dry: SSD

Mix designs are valid for a 12 month period from date of approval or unless there is a change in material, material property or design parameter.

Cement: 701.02	Source: CIMENT QUEBEC - ST BASILE, QUEBEC Brand Name:			Specific Gravity 3.150		488 lb/cy	2.48 cf
Cement Type III: 701.04	Source: Brand Name:			Specific Gravity		lb/cy	0.00 cf
Blended Cement: 701.06	Source: Brand Name:			Specific Gravity		lb/cy	0.00 cf
Cement with Slag: 701.07	Source: Brand Name:			Specific Gravity		lb/cy	0.00 cf
Pozzolan: 725.03(a)	Source: Brand Name:			Specific Gravity		lb/cy	0.00 cf
Fly Ash: 725.03(a)	Source: HEADWATERS RESOURCES - BRAYTON POINT, MA Brand Name:			Specific Gravity 2.360		132 lb/cy	0.90 cf
Silica Fume: 725.03(b)	Source: BASF CONSTRUCTION CHEMICALS - CHICAGO, IL Brand Name: Rheomac SF 100			Specific Gravity 2.200		40 lb/cy	0.29 cf
Slag: 725.03(c)	Source: Brand Name:			Specific Gravity		lb/cy	0.00 cf
Water					35 gals	292.1 lb/cy	4.68 cf
Air Content Target					7.0 %		1.89 cf
Coarse Aggregate 3/8" 704.02A	Source:	Absorption		Specific Gravity		lb/cy	0.00 cf
Coarse Aggregate 3/4" 704.02B	Source: RAINVILLE QUARRY - GEORGIA, VT	Absorption	0.20	Specific Gravity 2.750		1650 lb/cy	9.62 cf
Coarse Aggregate 1 1/2" 704.02C	Source:	Absorption		Specific Gravity		lb/cy	0.00 cf
Fine Aggregate: 704.01	Source: AIRPORT SAND AND FILL - HIGHGATE, VT	Absorption	1.30	Specific Gravity 2.720 Fineness Modulus 2.72		1212 lb/cy	7.14 cf
Air Entrainment Admixture 725.02(b)	Source: MASTER BUILDERS INC - MESQUITE, TX Brand Name: Micro Air			Specific Gravity		2 oz/cy	
Retarder Admixture: 725.02(c)	Source: MASTER BUILDERS INC - MESQUITE, TX Brand Name: Pozzilith 100 XR			Specific Gravity		2 oz/cwt	
High Range Water Reducer Admixture: 725.02(h)	Source: MASTER BUILDERS INC - MESQUITE, TX Brand Name: Glenium 7500			Specific Gravity		8 oz/cwt	
Other Admixtures:	Source: Brand Name:			Specific Gravity			0.00 cf
	Source: Brand Name:			Specific Gravity			0.00 cf
	Source: Brand Name:			Specific Gravity			0.00 cf
				TOTAL	52.030	3814 lb	27.00 cf

Maximum Water/Cementitious Ratio	0.44		
Maximum Water (gal/cy)	34.8		
Slump Min/Max (inch)		min	max
Air Content Min/Max (%)	5.0	min	9.0 max
Design Unit Wt. (lb/cf)	141.26		

Notes:

Guidelines for Use

Dosage: There is no standard dosage for Micro Air admixture. The exact quantity of air-entraining admixture needed for a given air content of concrete varies because of differences in concrete making materials and ambient conditions. Typical factors that might influence the amount of air entrained include: temperature, cementitious materials, sand gradation, sand-aggregate ratio, mixture proportions, slump, means of conveying and placement, consolidation and finishing technique.

The amount of Micro Air admixture used will depend upon the amount of entrained air required under actual job conditions. In a trial mixture, use 1/8 to 1-1/2 fl oz/cwt (8-98 mL/100 kg) of cement. In mixtures containing water-reducing or set-control admixtures, the amount of Micro Air admixture needed is somewhat less than the amount required in plain concrete. Due to possible changes in the factors that can affect the dosage of Micro Air admixture, frequent air content checks should be made during the course of the work. Adjustments to the dosage should be based on the amount of entrained air required in the mixture at the point of placement. If an unusually high or low dosage of Micro Air admixture is required to obtain the desired air content, consult your BASF Construction Chemicals representative. In such cases, it may be necessary to determine that, in addition to a proper air content in the fresh concrete, a suitable air-void system is achieved in the hardened concrete.

Dispensing and Mixing: Add Micro Air admixture to the concrete mixture using a dispenser designed for air-entraining admixtures; or add manually using a suitable measuring device that ensures accuracy within plus or minus 3% of the required amount. For optimum, consistent performance, the air-entraining admixture should be dispensed on damp, fine aggregate or with the initial batch water. If the concrete mixture contains lightweight aggregate, field evaluations should be conducted to determine the best method to dispense the air-entraining admixture.

Precaution

In a 2005 publication from the Portland Cement Association (PCA R&D Serial No. 2789), it was reported that problematic air-void clustering that can potentially lead to above normal decreases in strength was found to coincide with late additions of water to air-entrained concretes. Late additions of water include the conventional practice of holding back water during batching for addition at the jobsite. Therefore, caution should be exercised with delayed additions to air-entrained concrete. Furthermore, an air content check should be performed after any post-batching addition to an air-entrained concrete mixture.

Product Notes

Corrosivity – Non-Chloride, Non-Corrosive: Micro Air admixture will neither initiate nor promote corrosion of reinforcing and prestressing steel embedded in concrete, or of galvanized steel floor and roof systems. No calcium chloride or other chloride-based ingredients are used in the manufacture of this admixture.

Compatibility: Micro Air admixture may be used in combination with any BASF Construction Chemicals admixture, unless stated otherwise on the data sheet for the other product. When used in conjunction with other admixtures, each admixture must be dispensed separately into the mixture.

Storage and Handling

Storage Temperature: Micro Air admixture should be stored and dispensed at 35 °F (2 °C) or higher. Although freezing does not harm this product, precautions should be taken to protect it from freezing. If it freezes, thaw and reconstitute by mild mechanical agitation. ***Do not use pressurized air for agitation.***

Shelf Life: Micro Air admixture has a minimum shelf life of 18 months. Depending on storage conditions, the shelf life may be greater than stated. Please contact your BASF Construction Chemicals representative regarding suitability for use and dosage recommendations if the shelf life of Micro Air admixture has been exceeded.

Safety: Micro Air admixture is a caustic solution. Chemical goggles and gloves are recommended when transferring or handling this material. (See MSDS and/or product label for complete information.)

Packaging

Micro Air admixture is supplied in 55 gal (208 L) drums, 275 gal (1040 L) totes and by bulk delivery.

Related Documents

Material Safety Data Sheets: Micro Air admixture.

Additional Information

For suggested specification information or for additional product data on Micro Air admixture, contact your BASF Construction Chemicals representative.

The Admixture Systems business of BASF Construction Chemicals is a leading provider of innovative additives for specialty concrete used in the ready mix, precast, manufactured concrete products, underground construction and paving markets throughout the NAFTA region. The Company's respected Master Builders brand products are used to improve the placing, pumping, finishing, appearance and performance characteristics of concrete.

BASF Construction Chemicals, LLC
Admixture Systems
www.masterbuilders.com
United States 23700 Chagrin Boulevard, Cleveland, Ohio 44122-5544 Tel: 800 628-9990 Fax: 216 839-8821
Canada 1800 Clark Boulevard, Brampton, Ontario L6T 4M7 Tel: 800 387-5862 Fax: 905 792-0651

© Construction Research & Technology GMBH
© BASF Construction Chemicals, LLC 2007 Printed in USA 03/07 LIT # 1017034

Master Builders

BASF
The Chemical Company

3/4 | 03 30 00 Cast-in-Place Concrete | 03 40 00 Precast Concrete | 03 70 00 Mass Concrete | 04 05 16 Masonry Grouting | Product Data

GLENIUM® 7500

High-Range Water-Reducing Admixture

Description

GLENIUM® 7500 high-range water-reducing admixture is based on the next generation of polycarboxylate technology found in all of the Glenium 7000 series products. This technology combines state-of-the-art molecular engineering with a precise understanding of regional cements to provide specific and exceptional value to all phases of the concrete construction process.

GLENIUM 7500 admixture is very effective in producing concrete mixtures with different levels of workability including applications that require self-consolidating concrete (SCC). The use of GLENIUM 7500 admixture results in faster setting characteristics as well as improved early age compressive strength. GLENIUM 7500 admixture will meet ASTM C 494/C 494M requirements for Type A, water-reducing, and Type F, high-range water-reducing, admixtures.

Applications

Recommended for use in:

- Concrete with varying water reduction requirements (5-40%)
- Concrete where control of workability and setting time is critical
- Concrete where high flowability, increased stability, high early and ultimate strengths, and improved durability are needed
- Production of Rheodynamic® Self-Consolidating Concrete (SCC) mixtures
- 4x4™ Concrete for fast-track construction
- Pervious Concrete mixtures

Features

- Excellent early strength development
- Controls setting characteristics
- Optimizes slump retention/setting relationship
- Consistent air entrainment
- Dosage flexibility

Benefits

- Faster turnover of forms due to accelerated early strength development
- Reduces finishing labor costs due to optimized set times
- Use in fast track construction
- Minimizes the need for slump adjustments at the jobsite
- Less jobsite QC support required
- Fewer rejected loads
- Optimizes concrete mixture costs

Performance Characteristics

Concrete produced with GLENIUM 7500 admixture achieves significantly higher early age strength than first generation polycarboxylate high-range water-reducing admixtures. GLENIUM 7500 admixture also strikes the perfect balance between workability retention and setting characteristics in order to provide efficiency in placing and finishing concrete.

Guidelines for Use

Dosage: GLENIUM 7500 admixture has a recommended dosage range of 2-15 fl oz/cwt (130-975 mL/100 kg) of cementitious materials. For most applications, dosages in the range of 5-8 fl oz/cwt (325-520 mL/100 kg) will provide excellent performance. For high performance and Rheodynamic Self-Consolidating Concrete mixtures, dosages of up to 12 fl oz/cwt (780 mL/100 kg) of cementitious materials can be utilized. Because of variations in concrete materials, jobsite conditions and/or applications, dosages outside of the recommended range may be required. In such cases, contact your local BASF Admixtures representative.

Mixing: GLENIUM 7500 admixture can be added with the initial batch water or as a delayed addition. However, optimum water reduction is generally obtained with a delayed addition.

Master Builders

Product Notes

Corrosivity – Non-Chloride, Non-Corrosive: GLENIUM 7500 admixture will neither initiate nor promote corrosion of reinforcing steel embedded in concrete, prestressing steel or of galvanized steel floor and roof systems. Neither calcium chloride nor other chloride-based ingredients are used in the manufacture of GLENIUM 7500 admixture.

Compatibility: GLENIUM 7500 admixture is compatible with most admixtures used in the production of quality concrete, including normal, mid-range and high-range water-reducing admixtures, air-entrainers, accelerators, retarders, extended set control admixtures, corrosion inhibitors, and shrinkage reducers.

Do not use GLENIUM 7500 admixture with admixtures containing beta-naphthalene sulfonate. Erratic behaviors in slump, workability retention and pumpability may be experienced.

Storage and Handling

Storage Temperature: GLENIUM 7500 admixture must be stored at temperatures above 40 °F (5 °C). If GLENIUM 7500 admixture freezes, thaw and reconstitute by mechanical agitation.

Shelf Life: GLENIUM 7500 admixture has a minimum shelf life of 6 months. Depending on storage conditions, the shelf life may be greater than stated. Please contact your BASF Admixtures representative regarding suitability for use and dosage recommendations if the shelf life of GLENIUM 7500 admixture has been exceeded.

Packaging

GLENIUM 7500 admixture is supplied in 55 gal (208 L) drums, 275 gal (1040 L) totes and by bulk delivery.

Related Documents

Material Safety Data Sheets: GLENIUM 7500 admixture.

Additional Information

For additional information on GLENIUM 7500 admixture or on its use in developing concrete mixtures with special performance characteristics, contact your BASF Admixtures representative.

BASF Admixtures is a leading provider of innovative chemical admixtures and silica fume for specialty concrete used in the ready mix, precast, manufactured concrete products, underground construction and paving markets in the United States and Canada. The Company's respected Master Builders brand products are used to improve the placing, pumping, finishing, appearance and performance characteristics of concrete.

www.basf-admixtures.com
United States 23700 Chagrin Boulevard, Cleveland, Ohio 44122-5544 ■ Tel: 800 628-9990 ■ Fax: 216 839-8821
Canada 1800 Clark Boulevard, Brampton, Ontario L6T 4M7 ■ Tel: 800 387-5862 ■ Fax: 905 792-0651

® Construction Research & Technology GMBH

© BASF Admixtures 2007 ■ Printed in USA ■ 01/07 ■ LIT # 2000025

Master Builders

POZZOLITH® 100 XR

Set Retarding Admixture

Description

Pozzolith 100 XR ready-to-use liquid admixture is used for producing more uniform and predictable quality concrete. Placing and finishing requirements are facilitated because this admixture retards setting time. Pozzolith 100 XR admixture meets ASTM C 494/C 494M requirements for Type B, retarding, and Type D, water-reducing and retarding, admixtures.

Applications

Recommended for use in:

- Prestressed concrete
- Precast concrete
- Reinforced concrete
- Shotcrete
- Lightweight or normal weight concrete
- Pumped concrete
- 4x4™ Concrete
- Pervious Concrete
- Rheodynamic®Self-Consolidating Concrete

Features

- Reduced water content required for a given workability
- Retarded setting characteristics
- Controlled retardation – depending on the addition rate
- Dead-load deflection can take place (before concrete sets) in extended pours for bridge decks, cantilevers, nonshored structural elements, etc.

Benefits

- Improved workability
- Reduced segregation
- Superior finishing characteristics for flatwork and cast surfaces
- Flexibility in scheduling of placing and finishing operations
- Offsets effects of early stiffening during extended delays between mixing and placing
- Helps eliminate cold joints
- Peak temperature and/or rate of temperature rise in mass concrete lowered thereby reducing thermal cracking
- Increased compressive and flexural strength

Performance Characteristics

Rate of Hardening: The temperature of the concrete mixture and the ambient temperature (forms, earth, reinforcement, air, etc.) affect the hardening rate of concrete. At higher temperatures, concrete stiffens more rapidly which may cause problems with placing and finishing. Pozzolith 100 XR admixture retards the set of concrete. Within the normal dosage range, it will generally extend the setting time of concrete containing normal portland cement approximately 1-1/2 to 8 hours compared to that of a plain concrete mixture, depending on job materials and temperatures. Trial mixtures should be made with materials approximating job conditions to determine the dosage required.

Compressive Strength: Concrete produced with Pozzolith 100 XR admixture will have rapid strength development after initial set occurs. If retardation is within the normal ASTM C 494/C 494M Types B and D specifications, Pozzolith 100 XR admixture will develop higher early (24-hour) and ultimate strengths than plain concrete when used within the recommended dosage range and under normal, comparable curing conditions.

When Pozzolith 100 XR admixture is used in heat-cured concrete, the length of the preheating period should be increased until initial set of the concrete is achieved. The actual heat-curing period is then reduced accordingly to maintain existing production cycles without sacrificing early or ultimate strengths.

Guidelines for Use

Dosage: Pozzolith 100 XR admixture is recommended for use at a dosage of 3 ± 1 fl oz/cwt (195 ± 65 mL/100 kg) of cementitious materials for most concrete mixtures using typical concrete ingredients. Because of variations in job conditions and concrete materials, dosage rates other than the recommended amounts may be required. In such cases, contact your local sales representative.

Pozzolith 100 XR admixture may be used at less than the recommended dosage for the purpose of retardation only.

Product Notes

Corrosivity – Non-Chloride, Non-Corrosive: Pozzolith 100 XR admixture will neither initiate nor promote corrosion of reinforcing steel in concrete. This admixture does not contain intentionally-added calcium chloride or other chloride-based ingredients.

Compatibility: Pozzolith 100 XR admixture may be used in combination with any BASF Construction Chemicals admixtures. When used in conjunction with other admixtures, each admixture must be dispensed separately into the mix.

Storage and Handling

Storage Temperature: If this product freezes, thaw at 35 °F (2 °C) or above and completely reconstitute by mild mechanical agitation. ***Do not use pressurized air for agitation.***

Shelf Life: Pozzolith 100 XR admixture has a minimum shelf life of 18 months. Depending on storage conditions, the shelf life may be greater than stated. Please contact your local sales representative regarding suitability for use and dosage recommendations if the shelf life of Pozzolith 100 XR admixture has been exceeded.

Packaging

Pozzolith 100 XR admixture is supplied in 55 gal (208 L) drums, 275 gal (1040 L) totes and by bulk delivery.

Related Documents

Material Safety Data Sheets: Pozzolith 100 XR admixture.

Additional Information

For additional information on Pozzolith 100 XR admixture or its use in developing a concrete mix with special performance characteristics, contact your local sales representative.

The Admixture Systems business of BASF Construction Chemicals is a leading provider of innovative additives for specialty concrete used in the ready-mixed, precast, manufactured concrete products, underground construction and paving markets throughout the North American region. The Company's respected Master Builders brand products are used to improve the placing, pumping, finishing, appearance and performance characteristics of concrete.

BASF Construction Chemicals
Admixture Systems
www.masterbuilders.com
United States 23700 Chagrin Boulevard, Cleveland, Ohio 44122-5544 • Tel: 800 628-9990 • Fax: 216 839-8821
Canada 1800 Clark Boulevard, Brampton, Ontario L6T 4M7 • Tel: 800 387-5862 • Fax: 905 792-0651

® Construction Research & Technology GMBH
© BASF Construction Chemicals 2009 • Printed in USA • 08/09 • LIT # 1016963

Master Builders

STATE OF VERMONT
AGENCY OF TRANSPORTATION
CONSTRUCTION AND MATERIALS BUREAU

CONCRETE BATCH PLANT DAILY REPORT

Day & Date Friday, May 29, 2015

Plant Harrison Redi-Mix **Location** Georgia, VT

1 1/2" Stone		3/4" Stone		3/8" Stone		Fine Aggregate	
Sieve	% passing	Sieve	% passing	Sieve	% passing	Sieve	% passing
						3/8"	100
1 3/4"	100	1"	100	1/2"	100	4	100
1 1/2"	93	3/4"	97	3/8"		8	88
1"	36	1/2"	69	1/4"		16	70
3/4"	5	3/8"	48	4		30	48
1/2"	4	4	8	8		50	23
3/8"	2	8	3	16		100	6
flats					FM	2.65	
fractured					Color		

1 1/2 Stone Rainville Quarry Georgia
3/4 Stone Rainville Quarry Georgia
3/8 Stone N/A
Fine Agg. Airport Sand and Fill - Highgate, VT
Cement Ciment Quebec **Type** II
Silica Fume BASF Rheomac SF100
Fly Ash Headwaters, Brayton Pt. MA
Slag
Air Entrainer Micro Air
Retarder Pozz 100XR
Water Reducer Glenium 7500
Choose

	DRY BATCH WEIGHTS			MOISTURE TEST		ABSORB		WET BATCH WEIGHTS		
Class →	HPC B			PERCENT	TIME	PERCENT	CLASS →	HPC B		
1 1/2" Stone	888			0.9		0.2		896		
3/4" Stone	888			1.1		0.2		898		
3/8" Stone						N/A				
Fine Aggregate	1242			4.1		1.3		1293		
Cement	412			Air Entrainment (oz/cy)				10.00		
Silica Fume	40			Retarding Admixture (oz/cwt)				105.00		
Fly Ash / Slag	113			High Range/ Water Red Admixture (oz/cwt)				210.00		

PROJECT			PROJECT		PROJECT	
Name	Jericho		Name		Name	
Number	STP FTBR (3)		Number		Number	
Class	Mix #	QUANTITY	Class	QUANTITY	Class	QUANTITY
HPC B	HP15-B-280	10 CY				
Cement Sample		No	Cement Sample		Cement Sample	
Wear Sample		No	Wear Sample		Wear Sample	

Time required at plant 9:25 **AM** 1:30 **PM** **Visitors at plant**

Remarks Line item number 0410

Plant Inspector D. Connolly

Report Printed 7/25/2013 3:19:40 PM

Date Entered: 7/5/2013

Entered By:

Vermont Agency of Transportation
Materials and Research Section
1 National Life Drive
Montpelier, VT 05633-5001

Distribution list

Concrete

Greg Wilcox

Report on Sample of Structural Concrete

Acceptance Sample

Lab number: C130266 **Report version:** N/A

Project: Cambridge - BRF 027-1(4)

Pay item: 501.33 Concrete, High Perf.Class A

Spec number: 501.03A **Units:** m **Effective date:** 1/29/2010

Material name: CONCRETE **Class:** A-HPC

Quantity represented: 33.64 m³

Material source: Harrison Redi-Mix, Georgia

Location Used: Pier #1 Hammer Head

Coarse Agg: SWANTON LIME STONE, SWANTON, VT.

Fine Agg: Airport Sand +Fill, Georgia, VT

Cement brand: CIMENT QUEBEC BLENDED,

Admixture: MICRO-AIR **Dosage:** 57.3 ML/M3

Admixture: POZZOLITH 100-XR **Dosage:** 2.1 ML/KG

Admixture: Glenium 7500 **Dosage:** 4.8 ML/KG

Date Modified 7/25/2013

Modified By: DRL

Date/time sampled: 6/26/2013 11:00 AM

Sampled from: Truck chute

Field Test by: Darren C

Lab Test by:

Ident. No:

X-Ref No:

Total Agg. Dry Weight: 1591 kg/m³

Type: II **Quantity:** 266 kg/m³

Tests	Test Results	Specs Min	Specs Max	Outside Specs
T-121 Unit weight of fresh concrete, kg/m³				
T-152 Air content, %:	5.7	4.5	7.5	
T-119 Slump, mm:	140		180	
Total water, l/m³:	147.8		172.5	
W/C ratio:	0.41		0.44	
ASTM C 1064 Concrete temperature, °C	25	10	29	
Ambient temperature, °C	24	-12	32	

T-22 Compressive strength of PCC cylinders

Specimen	Unit density	Date Received	Date Broken	Age Brk	Des age	Break hour	F/S	Break type	ϕ mm	Area mm²	Load N	Brk MPa	28 Day Spec	Out of Spec
HH-3	2387	7/3/2013	7/3/2013	7	7	14:53	F	Shear	101.60	8107	254882	31.4	30	
HH-4	2387	7/3/2013	7/3/2013	7	7	14:57	F	Shear	101.60	8107	254437	31.4	30	
											Avg:	31.4	30	
HH-1	2403	7/3/2013	7/24/2013	28	28	9:58	S	Shear	101.60	8107	408790	50.4	30	
HH-2	2403	7/3/2013	7/24/2013	28	28	10:01	S	Shear	101.60	8107	416796	51.4	30	
											Avg:	50.9	30	

Remarks: The results of tests performed are in compliance with specifications

Comments:

Reviewed by: Dan Lessard, Structural Concrete Tech. IV
For: William E. Ahearn, PE, Materials & Research Engineer

DAL 7-25-2013
WEA

Inital

Quality Control Procedures

Blow & Cote QC Control Manager: Marc Cote*

1. A pre-production meeting shall be held a minimum of seven calendar days prior to the beginning of concrete placement. The pre-production meeting will be attended by the Project Superintendent, QC Control Manager, the Concrete Producer's QC, the Resident Engineer, the Project Manager and the Composite Materials Engineer.
2. VTrans will retain their responsibilities for Quality Acceptance testing.
3. Four extra cylinder sets per concrete placement shall be taken for early strength breaks or confirmation strength breaks.
4. All inside form dimensions, rebar spacing and clearances shall be reviewed and documented on the pre-pour inspection sheet (see page 10) by the Project Superintendent, the QC Control Manager and the resident engineer before casting is commenced.
5. Before forms are erected the contractor will inspect all form work for damage or residual concrete. Any deficiency in the form material shall be corrected prior to being incorporated into the form work. Forming shall conform to 2011 Standard Specification 541.09.
6. Forms shall be coated with form oil as needed prior to installing rebar. Caution will be taken not to over-oil the forms so no oil gets on the rebar. Oiled forms will be wet before concrete placement. Any wood forms or oil that may discolor the concrete will not be used.
7. Concrete tolerance to be +/- ¼"; Reinforcing steel placement tolerances to be +/- ¼" for cover and clearance and 1" for spacing of bars; Horizontal clearances shall be 3" top and bottom with vertical clearance of 3" both faces. Support material to maintain clearance will be plastic.
8. All precast will be inspected by both the contractor and resident engineer and documented on the post-pour inspection sheet (see page 11). Any minor repairs (defined as holes, honeycombing, or spalls, which are 150 mm (6 inches) or less in diameter, that do not penetrate deeper than 25 mm (1 inch) into the concrete) will be repaired with a vertical or overhead patch from the approved products list. Any issues requiring repair for an area over 6" in diameter will be cause for rejection. Cracks less than 0.25 mm (0.01 inch) in width shall be sealed by a method approved by the Engineer. Cracks in excess of 0.25 mm (0.01 inch) may be cause for rejection.
9. The date of manufacture, the production lot number, and the piece mark shall be clearly marked on each individual piece of precast concrete. The mark shall be in a location that will not be visible in the finished product.
10. Todd Nelson of Harrison Redi-Mix will be responsible for the QC for supplying the concrete to the project. See page 4 of this submittal for the approved mix design by Harrison Redi-Mix. Harrison to run aggregate gradations prior to producing concrete. Harrison will test concrete on project before placing it into forms to verify compliance to specifications. Should modifications need to be made in the field to comply with specifications, it will be done at this point (i.e. air content is low, more air entraining agent will be added as needed). The precast concrete will then be retested to confirm compliance with specification.

*Marc Cote's previous experience in this area:

1. Bristol BRO 1445(32): Cast-in-place abutments and deck
2. Fairground Road Bridge, Northfield, VT: Cast-in-place abutments, overlay.

Contractor Fabricated Precast Concrete Notes

1. Concrete abutment minimum compressive strength: 5,000 psi at 28 days
2. Only construction joints in abutments are between cheek walls and bridge seat, therefore no post-tensioning is required. All reinforcing will be tied and in place prior to placement of concrete below bridge seat. Construction joints will be constructed in accordance with VAOT Standard Spec 501.13.
3. All concrete to be supplied by Harrison Redi-Mix.
4. See page 4 of this submittal for the 5000 psi mix design by Harrison Redi-Mix
5. Concrete abutment bridge seats will have textured surface raked finish roughened to ¼" amplitude except area under bearing pads shall be troweled smooth to the proposed slope.
6. Tops of wingwalls to have smooth float finish.
7. All exposed concrete edges shall be chamfered 1"x1".
8. All lifting devices embedded in concrete shall be galvanized.
9. Abutments to be wet cured with forms in place per Table 501.17A "curing concrete components". The forms will be removed after 7 day cylinder breaks show a minimum design strength of 4,000 psi. The precast structure will not be handled and lifted until the cure period and the required 28 day design strength has been attained as demonstrated by field cured cylinder breaks.

Form Construction Notes

(Refer to page 9, Precast Form Details, for additional information)

- Level 8’ x 40’ area and compact native soil to construct abutments. Add 12” of compacted, dense graded stone with a ±1” shim layer of sand above and compact to a finished level surface.
- Lay down ¾” x 8’ x 40’ area of exterior plywood as a base to build abutments on. Attach 2”x6” plate to the ¾” plywood floor to maintain the correct exterior dimensions at the base of the abutment vertical forms. 2”x6” plate shall be fastened to plywood floor with (2) rows 16d common nails @ 6” o.c. each row, or equivalent.
- The exterior forms are ¾” exterior plywood with 2”x6” backers at 12” on center as shown on Page 9, Precast Form Details.
- (2)-2x6 walers @ 24” on center will be installed outboard of the 2”x6” backers on the form and be bolted thru to the wall ties inside the form to hold the assembly together.
- Strong backs will be installed approximately 18” and 6’-0” above the base. Strong backs to be made of (2)-2”x6” bolted to the walers to keep forms in alignment.
- 2x4 and 2x6 diagonal braces and kicker supports will be installed as required to hold the forms plumb.
- All rebar, pipes, lifting devices will be installed prior to building the second side of the form which will mirror the first side. The ends will be closed in last with ¾” plywood and similar backer, waler, and strong back construction as the long sides. Chamfer strips will be installed as needed to grade.
- Placement and curing of concrete in abutment forms as described above will be in accordance with State of Vermont Standard Specifications for Construction 2011 Edition, Subsection 501.10. All concrete will be placed in daylight and not in any adverse weather conditions.
- 1” form tie breakback per 501.09(f) will be achieved using Dayton/Richmond B-3 Screw-On Coil Ties with Dayton/Richmond B-30 Screw-On Plastic Cones (see pages 10-11).
- Vertical and horizontal spacing of forms ties shall be 24” o.c. maximum. First (lowest) row of form ties shall be 9” above the plywood floor as shown on page 9.

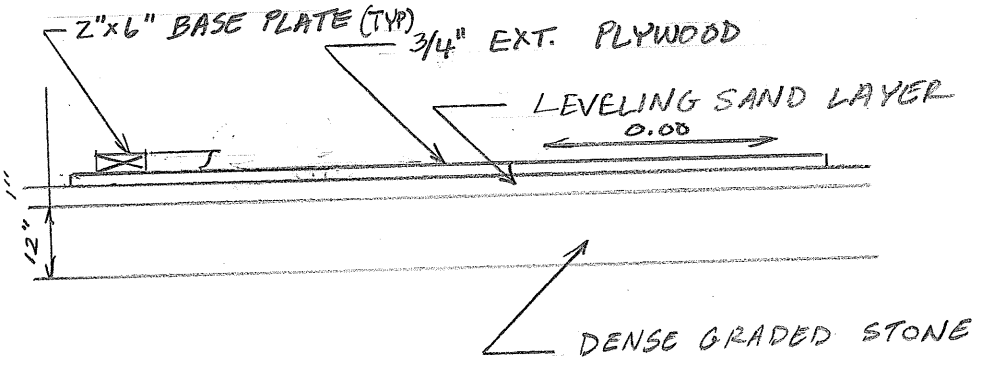

ABUTMENT CONST. PAD SECTION

NO SCALE

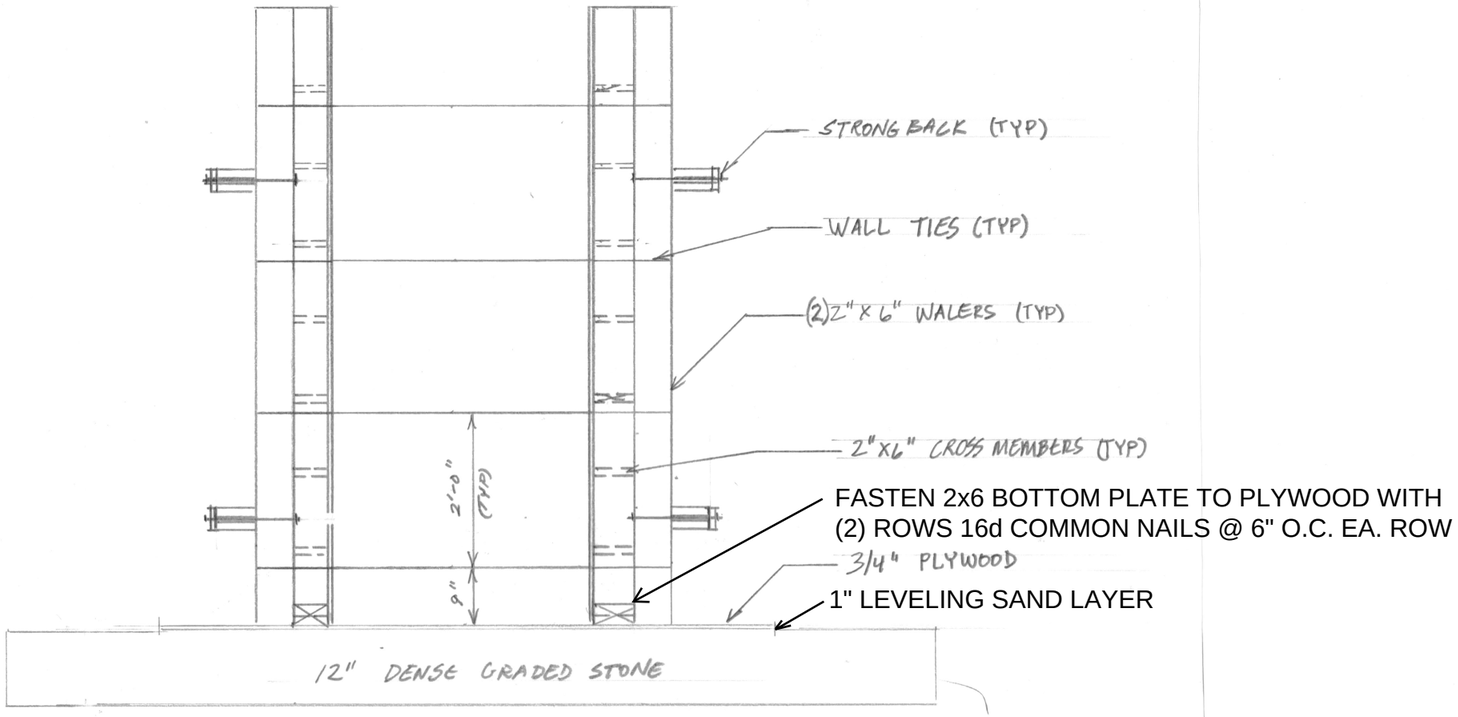

TYPICAL FORM SECTION
1/2" = 1'-0"

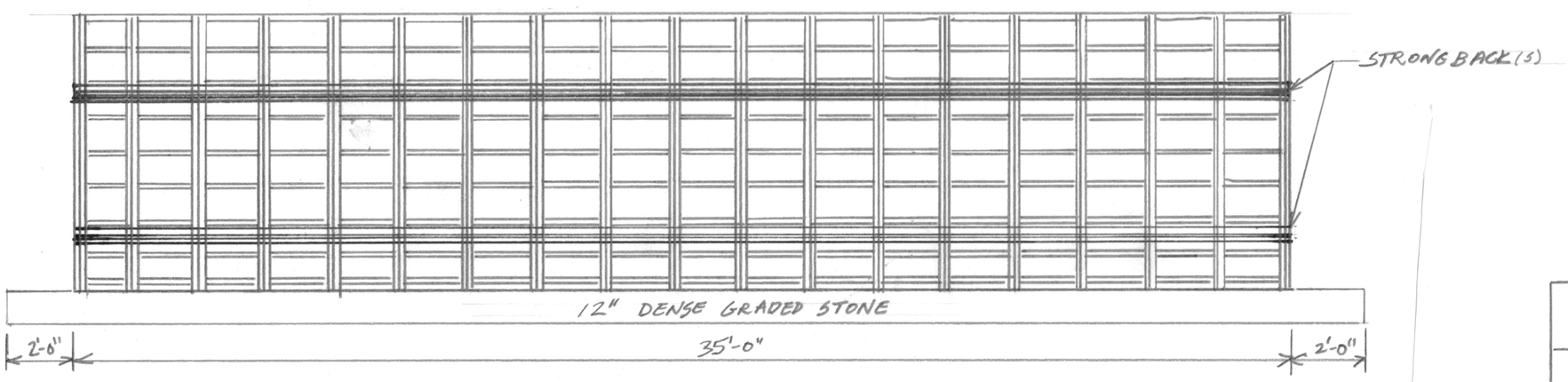

TYPICAL FORM ELEVATION
1/4" = 1'-0"

BLOW & COTE, INC.

CAMBRIDGE BRO 1448(39)

PRECAST FORM DETAILS

SCALE: AS SHOWN

2 FEB 15

B-30 Screw-On Plastic Cones

Dayton Richmond Screw-On Plastic Cones are designed to thread onto the protruding coil of a B-3 Screw-On Coil Tie. Use a B-15 Cone Removal Wrench to back the cone off the tie and out of the concrete. B-30 plastic cones are normally reusable.

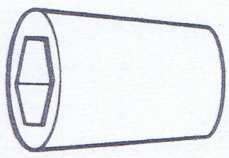

B-30 Screw-On Plastic Cone

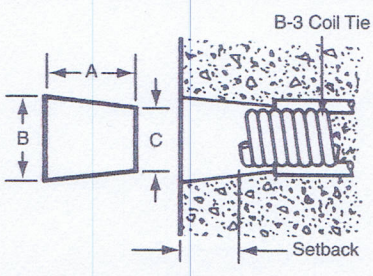

B-30 Screw-On Selection Chart				
Bolt Dia.	Setback	A	B	C
1/2"	1"	1-3/8"	1-1/4"	1"
1/2"	1-1/2"	1-7/8"	1-1/4"	1"
1/2"	2"	2-3/8"	1-1/4"	1"
3/4"	1"	1-1/2"	1-5/8"	1-7/16"
3/4"	2"	2-1/2"	1-3/4"	1-7/16"
1"	2"	2-1/2"	2-1/8"	1-13/16"
1-1/4"	2"	2-1/2"	2-3/8"	2-1/8"

Warning: Cones are to be used for spreader action only and are not designed for scaffold bracket or other accessory loads.

B-31 Rock Anchor

Dayton Richmond B-31 Rock Anchor is a preassembled unit tapped with 1/2". 3/4" or 1" diameter coil thread. NC thread is available on special order. Rock anchors used in sound rock or concrete allows one-sided forming of walls or similar applications to be completed quickly and economically.

The rock anchor is threaded onto the coil rod until the rod hits the backstop of the anchor. The plastic retaining sleeve is removed and the rock anchor/coil rod assembly is placed into the bore hole. The assembly is installed so that the anchor backstop "bottoms" in the bore hole. Tightening the coil rod will draw the anchor wedges forward to expand the anchor's shell. Care should be taken to not overtighten the anchor.

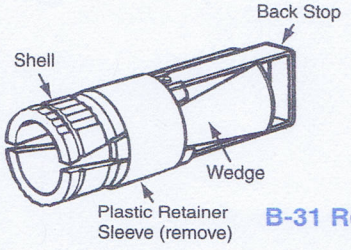

B-31 Rock Anchor

B-31 Rock Anchor Selection Chart			
Coil Rod Diameter	Minimum Hole Depth "L" *	Required Hole Diameter "D"	Safe Working Load Tension (lbs.) **
1/2"	6"	1-3/8"	4,500
3/4"	8"	1-5/8"	9,000
1"	10"	1-3/4"	18,000

SWL provides a factor of safety of approximately 2 to 1.

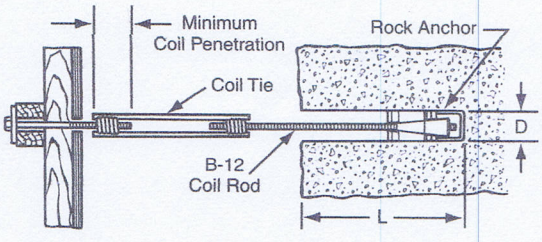

To Order:
Specify: (1) quantity, (2) name, (3) coil rod diameter.

Example:
600 pcs. B-31 Rock Anchor, 1/2" coil thread.

***NOTE:** It is extremely important to drill the proper size bore hole for the appropriate rock anchor. Avoid "dog leg" or "rifled" holes, they will hinder anchor installation. It is also important to avoid letting the drill dwell at the bottom of the hole. This can cause an enlargement at the bottom of the hole and result in a loss of anchorage strength.

The bore hole for the rock anchor must be drilled perpendicular to the exposed bearing surface. The load carrying capacity of the rock anchor is greatly reduced when there is an angle between the nut on the coil rod and the bearing surface.

The B-31 Rock Anchor is not a reusable device. After the rock anchor has been set and the forming completed, do not attempt to reuse the rock anchor.

****WARNING:** For safe construction practice, the most critical factor to consider is the actual anchorage capacity provided by the rock strata or concrete in which the rock anchor is to be installed. Correct hole depth and actual rock anchor capacity must always be determined by field tests before placing rock anchors into general use on a project.

DAYTON/RICHMOND CONCRETE ACCESSORIES
OR EQUAL

B-3 Screw-On Coil Tie

Dayton Richmond Screw-On Coil Tie is designed with longer coils that extend beyond the end of the struts. Plastic cones screw onto the projections to provide a positive setback and act as a fixed internal form spreader.

To determine proper screw-on coil tie length, subtract the required total setback (both sides) from the wall thickness.

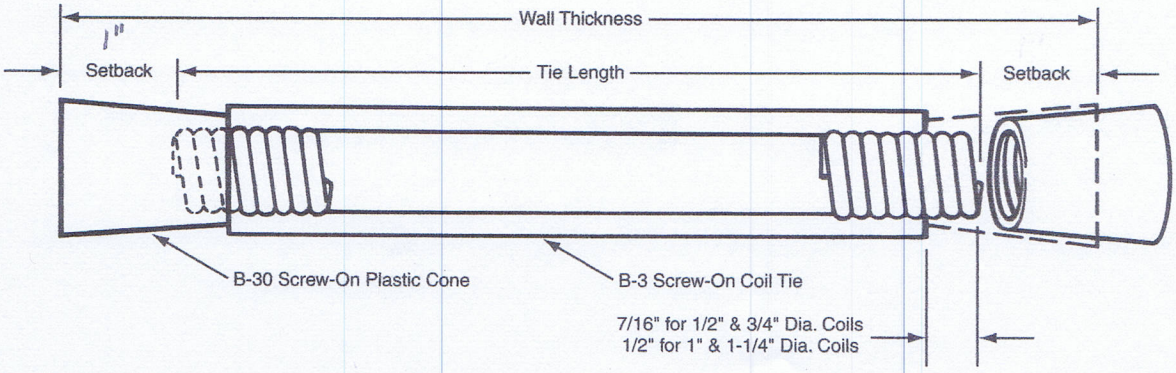

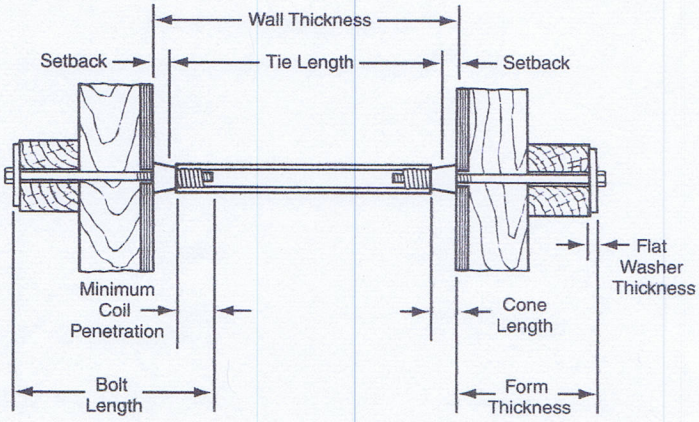

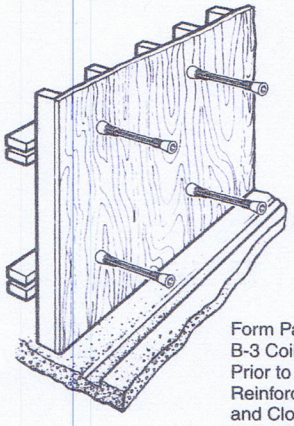

Form Panel Showing B-3 Coil Ties in Place Prior to Installation of Reinforcing Steel and Closure Form.

B-3 Screw-On Coil Tie Selection Chart			
Type	**Bolt Diameter**	**Number of Strut Wires**	**Safe Working Load Tension (lbs.)**
B-3 Standard	1/2"	2	4,500
B-3 Heavy	1/2"	2	6,750
B-3 Standard	3/4"	2	6,750
B-3 Heavy	3/4"	2	9,000
B-3 Standard	1"	2	13,500
B-3 Standard	1"	4	18,000
B-3 Standard	1-1/4"	4	27,000

SWL provides a factor of safety of approximately 2 to 1.
Warning: See Page 3.6 for minimum bolt length.

To Order:
Specify: (1) quantity, (2) name, (3) safe working load, (4) bolt diameter, (5) tie length, (6) wall thickness, (7) setback.

Example:
1,500 pcs. B-3 Screw-On Coil Tie, 6,750 lbs. SWL, 1/2" diameter, 22 long for a 24" wall, 1" setback.

CHECK CAPACITY:
DETERMINE MAX TENSION PER TIE:
T = γh x horizontal spacing x vertical spacing
T = 150 pcf x 5.67 ft x 2 ft x 2 ft
T = 3402 lbs < 4500 lbs OK

* SETBACKS ARE FILLED WITH A 3 PARTS SAND TO 1 PART CEMENT MIXTURE FROM ABUTMENT CONCRETE PRODUCER.

Prepour Inspection Form

Product or Job: _____

Inspection Date:	Mon	Tue	Wed	Thu	Fri	Sat
Form Condition						
Form Cleanliness						
Form Joints						
Release Agent / Retarder						
Design Length (ft/in)						
Set Up Length (ft/in)						
Design Width (ft/in)						
Set Up Width (ft/in)						
Design Depth (ft/in)						
Set Up Depth (ft/in)						
Blockouts						
Squareness						
End and Edge Details						
Reinforcing Steel						
Reinforcing Size						
Reinforcing Spacing						
Reinforcing Rustification						
Cast-in Items						
Lifting Devices						

Comments:_____

_____

_____

_____

_____

QC Inspector: _____ Date: _____

Post Pour Inspection Form

Product or Job: _____

	Mon	Tue	Wed	Thu	Fri	Sat
Casting Date: Inspection Date:						
Stripping Strength (psi)						
Casting Finish						
Coating Finish (if applicable)						
Cast Length (ft/in)						
Cast Width (ft/in)						
Cast Depth (ft/in)						
Cracks or Spalls						
Squareness						
Honeycombing / Bugholes						
Bowing / Camber						
Exposed reinforcement						
Embedment Item Locations						
Openings and Blockouts						
Lifting Devices						
Markings						
Outside temp </= 25 deg F.						
*Outside temp > 25 deg F.						

Comments:_____

_____

_____

_____

_____

QC Inspector: _____ Date: _____

Calculate precast abutment weight:

→ Assume reinforced concrete wt = 150 lb/ft³

area of Abutment face (from CAD)

→ Gross Volume = 214.72 ft² × 3.5 ft = 751.52 ft³

→ Volume Voids @ Piles = 4 (π×(1 ft)²)(5.5 ft) = 69.12 ft³

→ Net Volume = 751.52 ft³ − 69.12 ft³

= 682.4 ft³

→ Net Weight = 682.4 ft³ × 150 lb/ft³

= 102360.7 lbs

W = 51.2 tons

$$W = 51.2 \text{ tons} \times \frac{2000 \text{ lbs}}{\text{ton}} = 102{,}400 \text{ lbs}$$

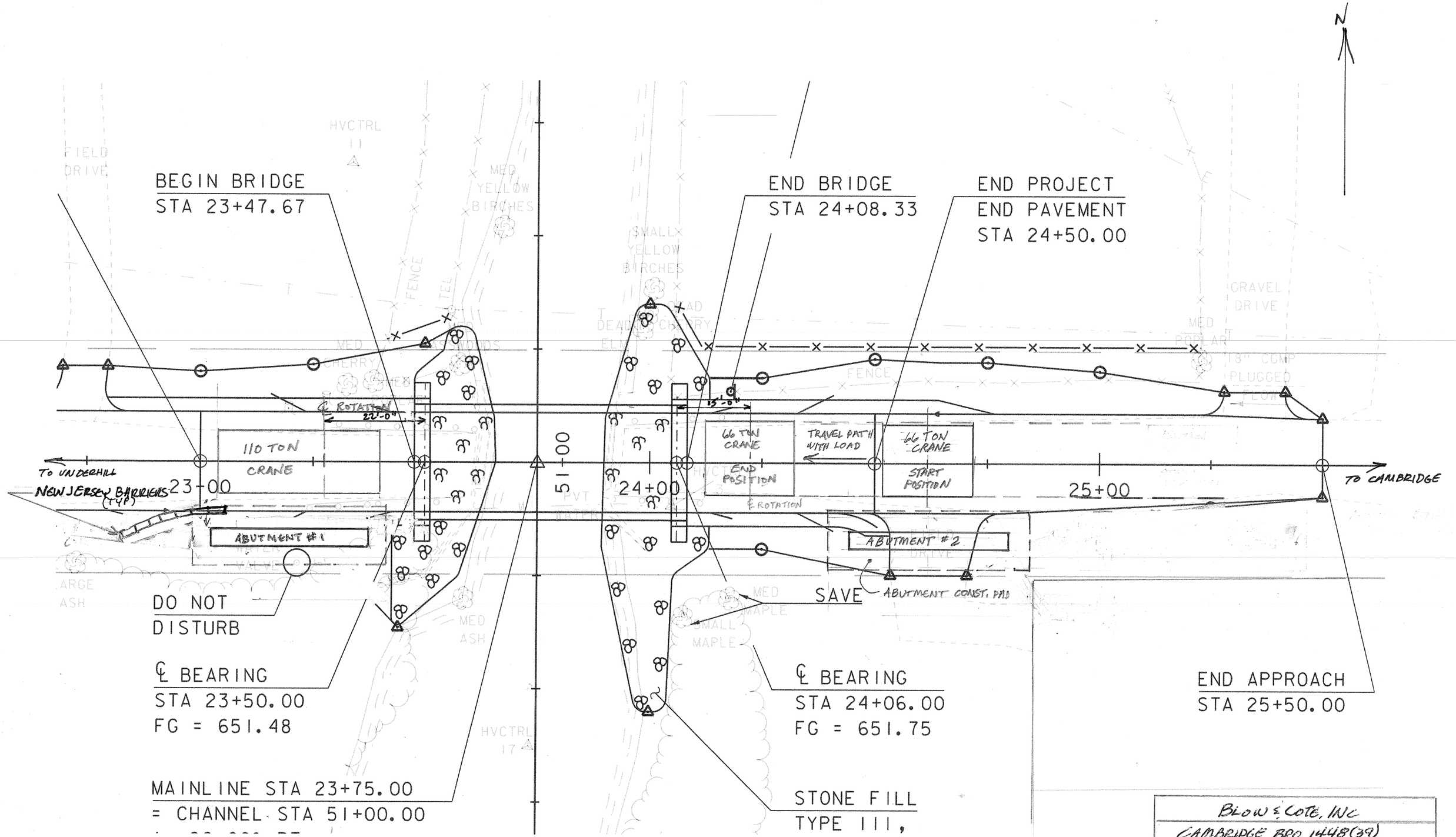

BLOW & COTE, INC
CAMBRIDGE BRO 1448(39)
ABUTMENT 1 & 2 LIFT
PLAN VIEW

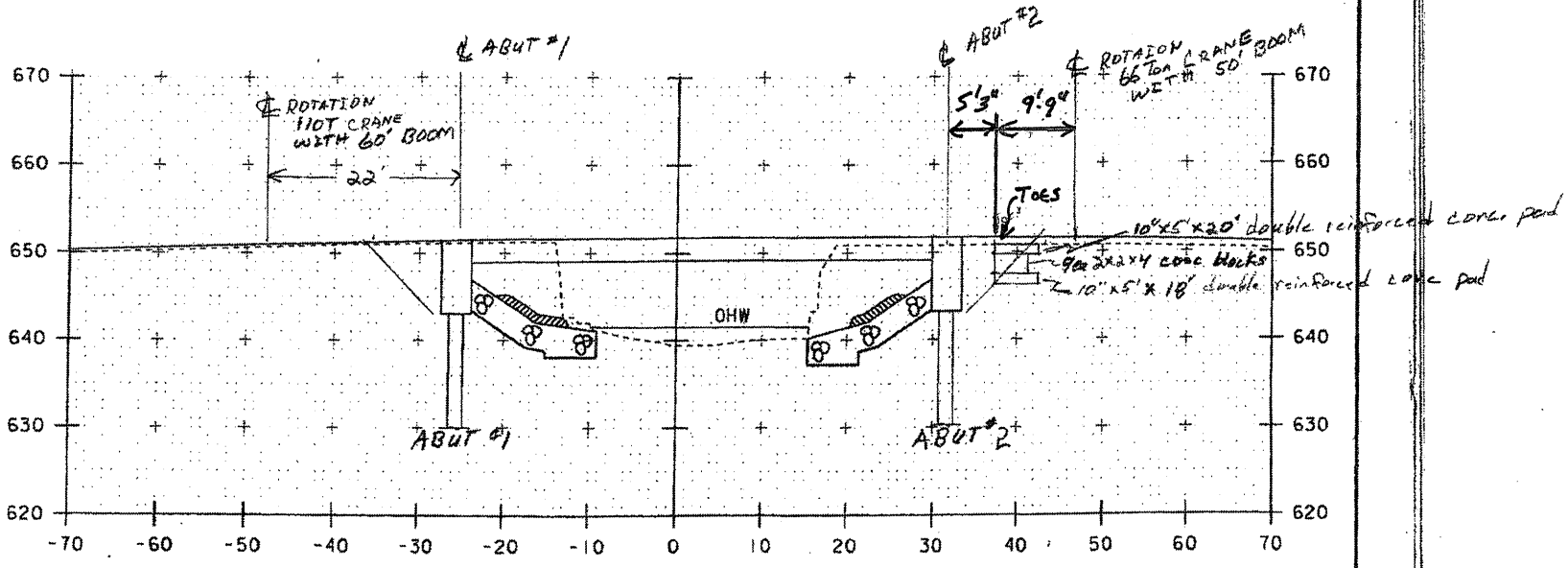

51+00

OVERALL ABUTMENT LIFT ELEVATION

PROJECT NAME:	CAMBRIDGE
PROJECT NUMBER:	BRO 1448(39)

BLOW & COTE, INC.
815 VT RTE 15E
MORRISVILLE, VT 05661

Abutment #1 Lifting Equipment and Sequence:

110T Truck Crane with 60' of boom, 22' lift radius and 7/8'' Lift Cable rigged with 8 Part Line and rigged as follows:

Qty	Rigging Item	Weight Each (lbs)	Weight Total (lbs)	Working Load Capacity (Each, lbs)	Required Load (Each, lbs)	Check**
1	6 Sheave 110 ton hook block	3,500	3,500	220,000	103,956	OK
2	14' 36 ton 2" cable sling	225	450	126,000*	103,506	OK
2	30 ton 1 ¾" lifting shackle	30	60	60,000	51,723	OK
2	HCLW 44 ton Tilt-Up block	320	640	88,000	51,403	OK
2	24' 42 ton 1 ½"cable sling	155	310	84,000	51,248	OK
4	17 ton lifting shackle	16	64	34,000	25,600	OK
4	WRA 160 Wire Rope Anchor	8	32	35,950	25,600	OK

* total capacity for 2-leg bridle 60 degree sling
**check that Required Load < Working Load Capacity

1. Crane will be set up with centerline of machine within 22' of Abutment #1.
2. Crane to lift Abutment #1 and swing 90 degrees to position Abutment #1 over rear of crane and lower it into position over piles #1-#4.
3. Crane will be moved away from the construction area.

Abutment #2 Lifting Equipment and Sequence:

66 Ton Sumitomo LS 120 RHDS Crane with 50' of boom, 15' lift radius and 1" Lift Cable rigged with 6 Part Line and rigged as follows:

Qty	Rigging Item	Weight Each (lbs)	Weight Total (lbs)	Working Load Capacity (Each, lbs)	Required Load (Each, lbs)	Check**
1	3 Sheave 60 ton hook block	3,500	3,500	120,000	103,956	OK
2	14' 36 ton 2" cable sling	225	450	126,000*	103,506	OK
2	30 ton 1 ¾" lifting shackle	30	60	60,000	51,723	OK
2	HCLW 44 ton Tilt-Up block	320	640	88,000	51,403	OK
2	24' 42 ton 1 ½"cable sling	155	310	84,000	51,248	OK
4	17 ton lifting shackle	16	64	34,000	25,600	OK
4	WRA 160 Wire Rope Anchor	8	32	35,950	25,600	OK

* total capacity for 2-leg bridle 60 degree sling
**check that Required Load < Working Load Capacity

1. Crane will be positioned and leveled on pad built behind Abutment #2 with centerline of machine within 15' of Abutment #2.
2. Crane to lift Abutment #2 and swing 90 degrees.
3. Crane to travel forward towards Abutment #2 final location with precast abutment positioned over the "toes" of the crawler and suspended 1' above ground.
4. Once the crane has reached position on the concrete pads the precast abutment will be lowered into position over piles #5-#8.
5. Crane will be moved away from the construction area.

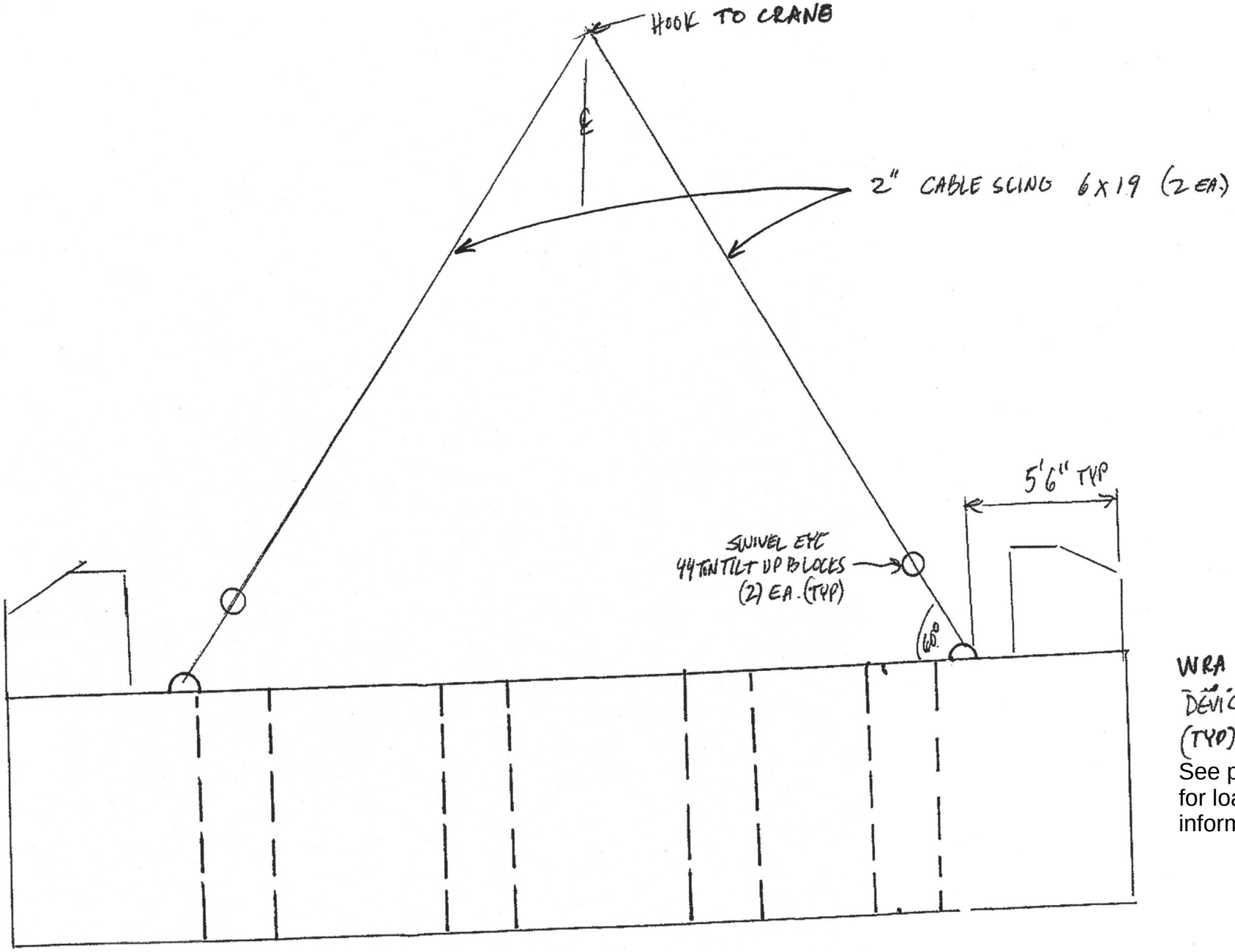

WRA 160 LIFTING DEVICE (4) PER ABUTMENT (TYP)

See page 17, 35 and 36 for load capacity information and check.

TYPICAL ABUTMENT LIFT DIAGRAM - SIDE VIEW

NO SCALE:

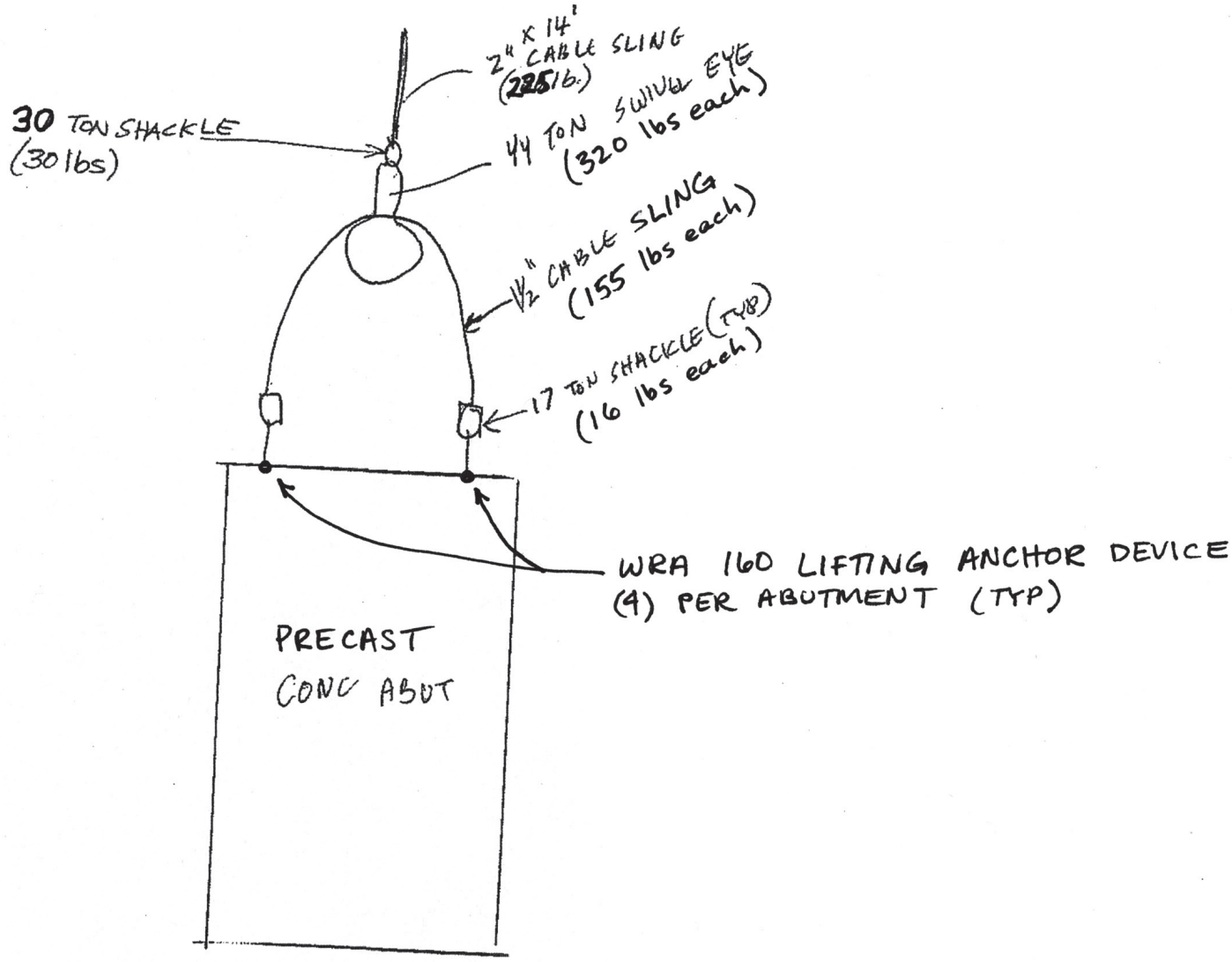

TYPICAL ABUTMENT LIFT DIAGRAM - END VIEW

Not to Scale

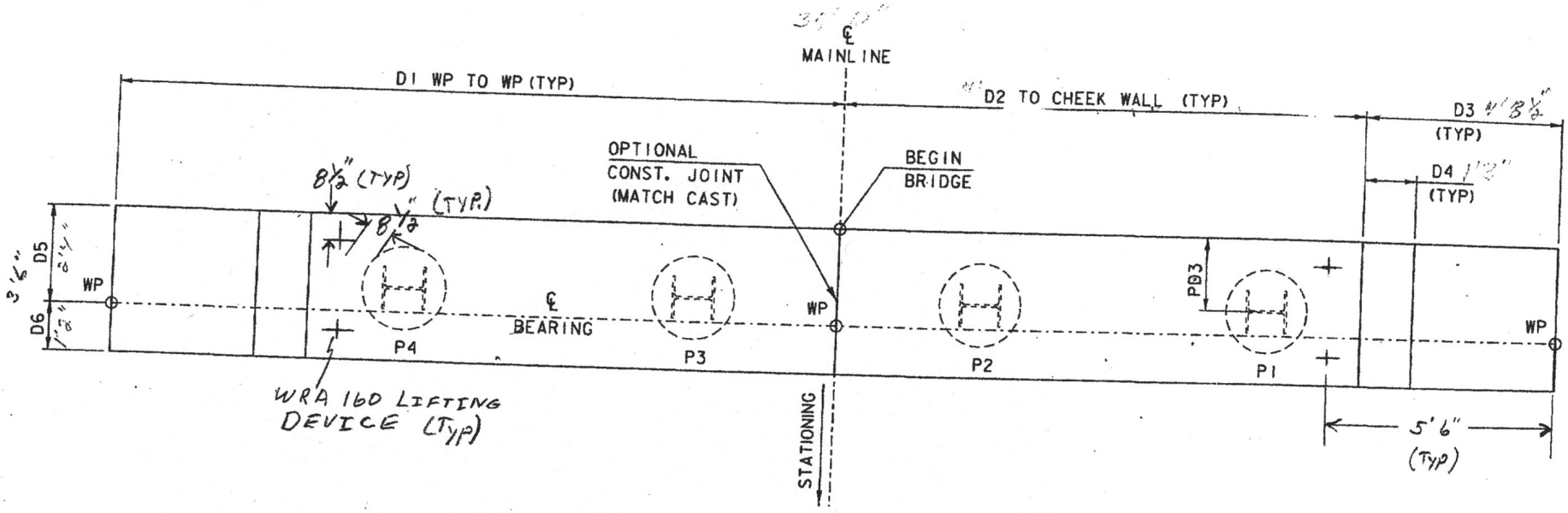

ABUTMENT WIRE ROPE LIFTING POINTS PLAN

SCALE ½" = 1'-0

BLOW & COTE, INC.
815 VT RTE 15E
MORRISVILLE, VT 05661

CAMBRIDGE
BRD 1448 (39)

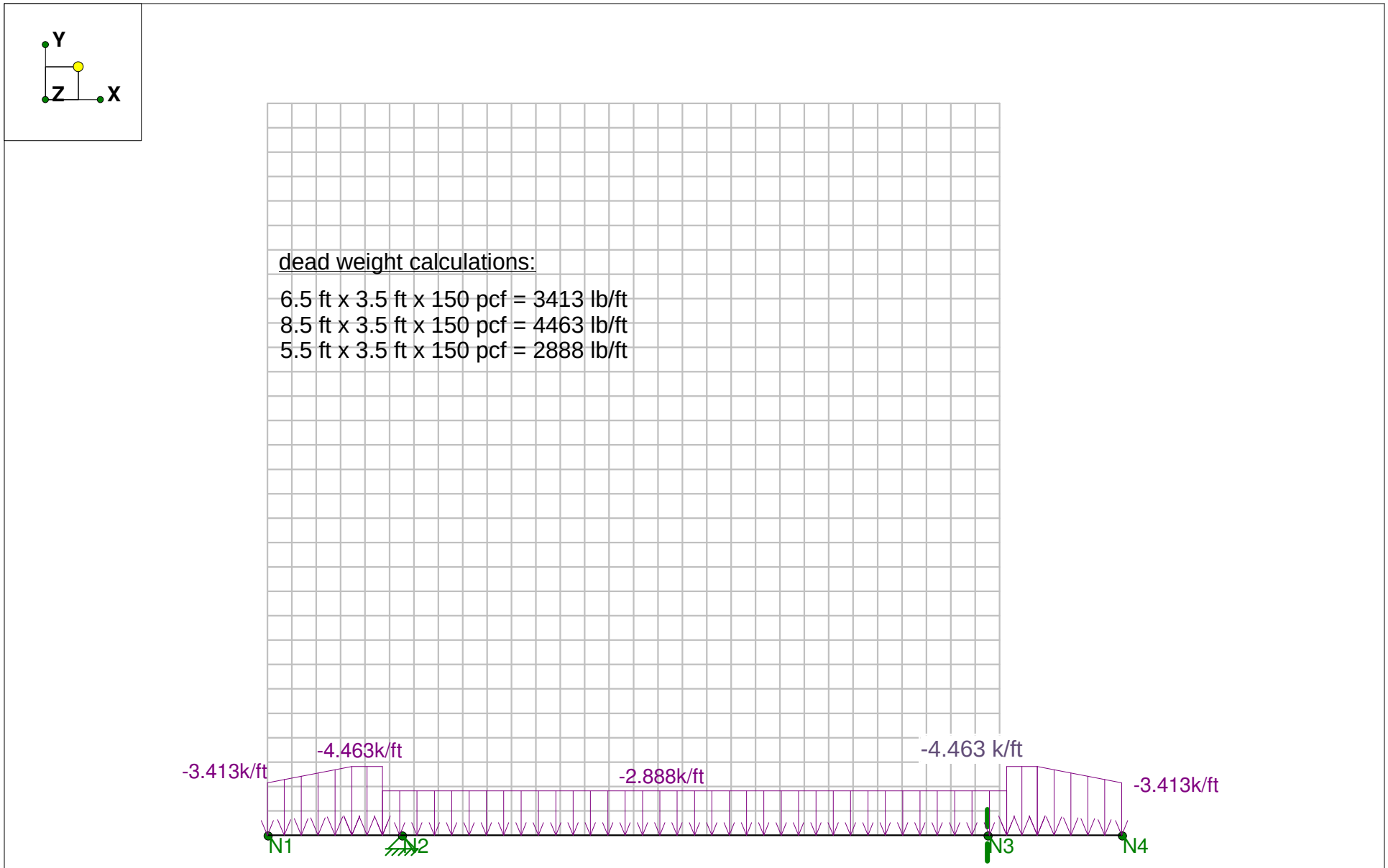

Loads: BLC 1,
Results for LC 1, dead weight

Thayer R. Fellows	ABUTMENT DEAD WEIGHT LOADING DIAGRAM	May 19, 2015
Kristin McCusker		11:01 AM
Page 21 of 37		Cambridge Abutments.r2d

Member: ***ABUTMENT***

Shape:
Length: **35 ft**
I Joint: **N1**
J Joint: **N4**

LC 1: dead weight

Max Code Check: **No Calc**

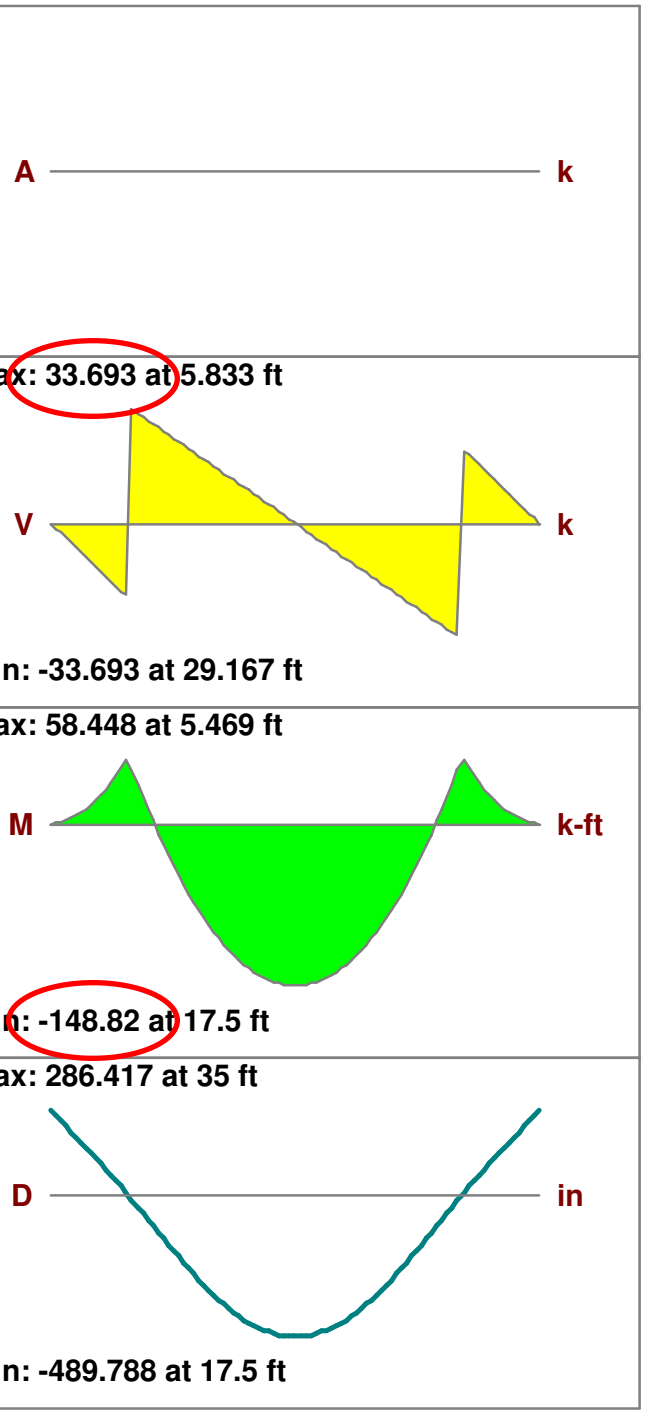

AISC ASD 9th Ed. Code Check

- Steel code check not calculated -

Max Defl Ratio **L/1**

T.R. Fellows Engineering - Reinforced Concrete Simple Beam Design

Reference: Reinforced Concrete Design, 2nd Edition, by Kenneth Leet

INPUT	value	units	description	Leet reference page	ACI 318-02 ref. section	CAMBRIDGE BRO1448(39) NOTES
fy	60,000	psi	reinforcing steel yield stress			
f'c	5,000	psi	concrete compressive stress			minimum required at 28 days
d	58.0	in	effective depth to center of reinforcing bar(s)			see Note 2 below regarding estimation of effective depth
h	67.0	in	gross beam depth			conservatively taken at middle section between cheek walls
b	18.0	in	width of beam section			reduced effective width at pile cavities (3.5' gross width - 2' diam pile cavity)
M_service	148,820	lb-ft	maximum bending moment due to service loads			see RISA analysis output, page 21
V_service	33,693	lbs	maximum shear due to service loads			see RISA analysis output, page 21
OUTPUT	**value**	**units**	**description**			
Mu	178,584	lb-ft	M_service x 1.2 dead load factor			Mu = required flexural strength
β	0.80	unitless	coefficient	Leet pg 90, eqn 3.32	ACI 10.2.7.3	
ρ_required	0.00066	unitless	min reinf. ratio required to meet Mu			user input, iterate to determine correct value
As_required	0.69	sq in	min area of reinforcing steel required to meet Mu			calculated from ρ_required
ρ_min	0.00088	unitless	min reinf. ratio required to meet ACI code		ACI 10.5.1 and 10.5.3	minimum of (200/fy) or (4/3*amount req'd by analysis)
As_provided	1.86	sq in	actual area of reinforcing steel provided in beam section			user input based on Cambridge BRO1448(39) beam section in question[1]
ρ_provided	0.00178	unitless	actual reinf. ratio provided in beam section			calculated from ρ_provided
a	0.539	in	depth of compression stress block	Leet pg 90, eqn 3.35 with ρ_required	ACI 10.2.7.1	
au	4.48	unitless	coefficient	Leet pg 108, Table 3.4 with ρ_required		
Mu=ΦMn	178,597	lb-ft	flexural design strength,Φ=0.9, using ρ_required	Leet pg 100, eqn 3.52 with ρ_required		
ΦMn	479,355	lb-ft	flexural design strength,Φ=0.9, using ρ_provided	Leet pg 100, eqn 3.52 with ρ_provided		flexural capacity of Cambridge beam section
fr	530	psi	modulus of rupture of concrete	Leet pg 50, eqn 3.1 & 3.2	ACI 9.5.2.3 eqn 9-10	
Mcr	595,163	lb-ft	cracking moment	Leet pg 50, eqn 3.2	ACI 9.5.2.3 eqn 9-9	cracking moment of Cambridge beam section, independent of reinf. ratio
Shear, Vc	147,644	lbs	shear strength of concrete	Leet pg 171, eqn 4.8	ACI 11.3.1.1	shear capacity of Cambridge beam section

Notes:

1. Estimate As_provided at the effective depth d = 58": (6) #5 bars or 6 x 0.31 sq in = 1.86 sq in
2. Estimate effective depth d: ±67" total beam depth - 3" cover - 6" = 58" ------- Assume (6) #5 bars symmetrically placed about this 58" depth.

CONCLUSIONS:

- The flexural capacity of the effective beam section (at the reduced effective width of 18" at pile cavities) with an area of steel, As = 1.86 sq in at an effective depth of 58 inches is 479,355 lb-ft. This capacity is more than twice the required flexural strength of 178,584 lb-ft.
- The cracking moment of the effective beam section (at the reduced effective width of 18" at pile cavities) is 595,163 lb-ft. This cracking moment is more than twice the appled (factored) moment of 178,584 lb-ft which indicates that no cracking will occur during the lift.
- The shear capacity of the effective beam section (at the reduced effective width of 18" at pile cavities) is 147,644 lbs. This capacity is more than four times the required shear strength of 33,693 lbs.
- Since the reinforcement in the section is symmetric above and below the neutral axis, the above analysis shows that the section is sufficient for both positive and negative moment regions.

Lift will be done within limits of lift chart capacities with 50' of main boom, no jib. Two concrete distribution pads to be placed on existing surface to distribute load. Each pad is 5' wide X 18' long and 10" thick.

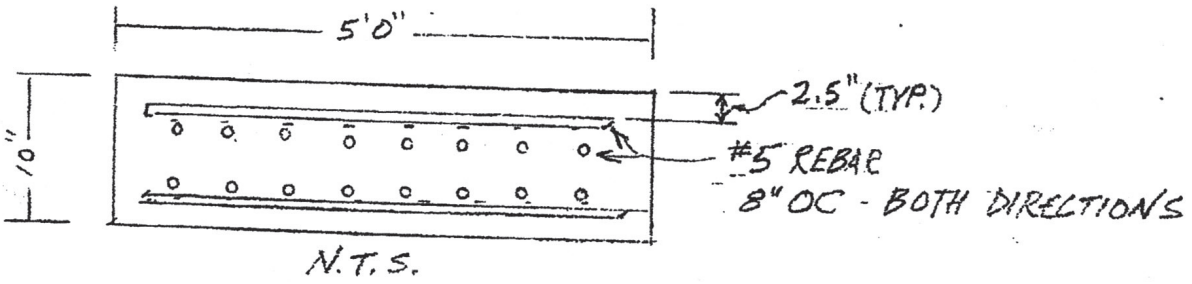

They will be placed perpendicular to the crane crawler tracks.

TYP. CONCRETE LOAD DISTRIBUTION PAD
Section & Notes

BLOW & COTE, INC.
815 VT RTE 15E
MORRISVILLE, VT 05661

CAMBRIDGE
BRD 1448 (37)

T.R. FELLOWS ENGINEERING

134 County Road
Walpole, NH 03608
PO Box 56
Rochester, VT 05767

REGISTERED PROFESSIONAL ENGINEERS
CIVIL – STRUCTURAL

603.756.4811
trifel@myfairpoint.net
802.318.7853
kricket@mapleridgevt.com

Lifting Analysis for Bucyrus-Erie 110T Truck Crane:

According to page 14 of this submittal, the total weight of each abutment is 51.2 tons (102,400 lbs). Assuming balanced loading, the maximum load to be carried by the Bucyrus-Erie 110T Truck Crane is the sum of the following: the total weight of the abutment (102,400 lbs), one 6-sheave 110-ton hook block (3,500 lbs), (2) 36-ton 2" cable slings (450 lbs), (2) 30-ton 1-3/4" shackles (60 lbs), (2) HCLW 44 ton Tilt-Up blocks (640 lbs), (2) 24' 42 ton 1-1/2" cable slings (310 lbs), (4) 17-ton shackles (64 lbs) and (4) WRA 160 Wire Rope Anchors (32 lbs). The maximum load to be carried by the crane is therefore:

102,400 lbs + 3,500 lbs + 640 lbs + 310 lbs + 450 lbs + 60 lbs + 64 lbs + 32 lbs = 107,500 lbs

Unbalanced loading is not an issue in this lifting situation when checking the crane lift capacity because each abutment is lifted by only one crane. Each abutment will be picked in accordance with the Abutment 1 & 2 Lift Plan View (see page 15), the Overall Abutment Lift Elevation (see page 16), the Abutment Lift Equipment and Sequence Descriptions (see page 17), the Typical Abutment Lift Diagram – Side View (see page 18), the Typical Abutment Lift Diagram – End View (see page 19), and the Abutment Wire Rope Lifting Point Plan (see page 20).

According to the attached lifting chart for the Bucyrus-Erie 110T Truck Crane (see page 27), with a 60 ft boom length, when the crane is positioned with maximum radius of load equal to 22 ft from centerline of machine, the lift capacity of the crane is 135,600 lbs. This safely exceeds the required capacity of 107,500 lbs. The outriggers must be set to achieve the required capacities.

During the lift, the crane will be supported on the (4) outriggers which will each bear on a 5' x 5' x 2" steel plate to distribute the outrigger load on the ground surface. The approximate uniform ground pressure exerted under the steel plates by the crane when loaded is as follows:

(107,500 lbs + 135,800 lbs) / (4 x 5 ft x 5 ft) = 2,433 psf

2,433 psf is less than the allowable soil bearing pressure of 3,000 psf.

Care shall be taken to ensure that the crane is positioned on a firm, level, and uniform supporting surface per manufacturer's recommendations.

BUCYRUS-ERIE

110-T

110 TON TRUCK CRANE SPECIFICATIONS

℄ rotation to rear of CRANE 12' 2"

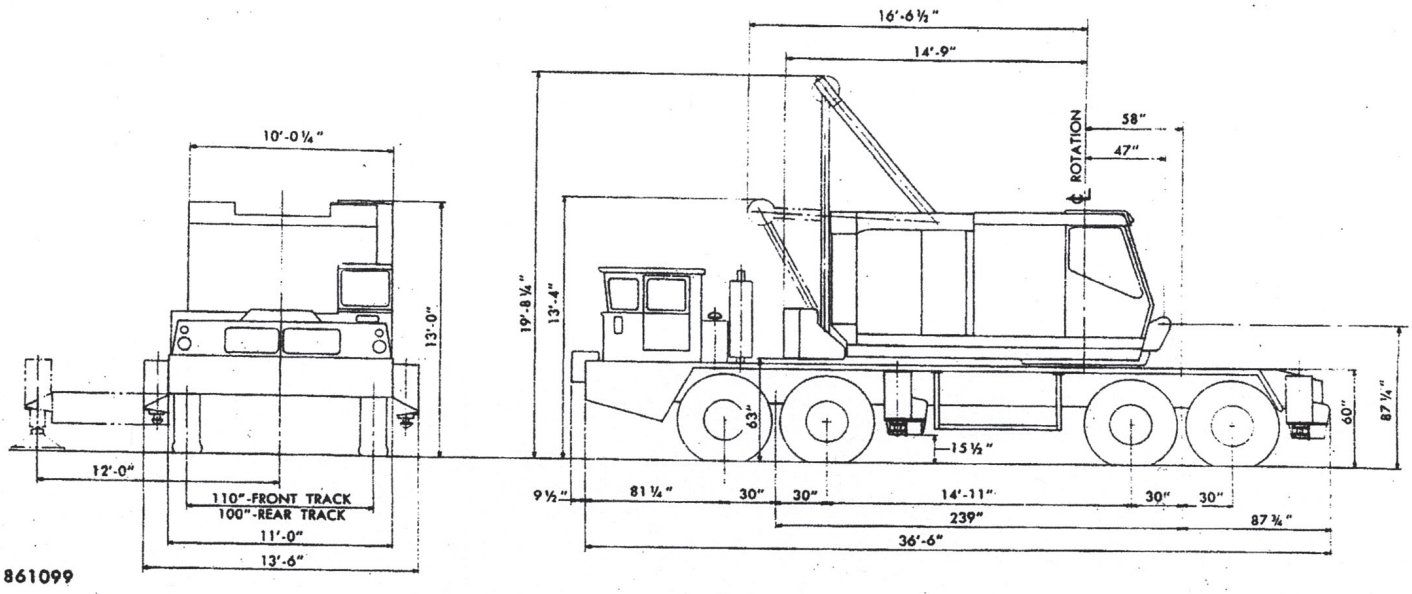

861099

CRANE

Front Shaft:

Main hoist drum, smooth .....16½ in. Pitch Diameter
Hoist rope .....¾ in. or ⅞ in. Diameter
Auxiliary hoist rope .....¾ in. or ⅞ in. Diameter
Auxiliary hoist drum, smooth .....16½ in. Pitch Diameter

Rear Shaft:

Boom hoist drum, smooth .....15 in. Pitch Diameter
Boom hoist rope .....¾ in. Diameter
Third drum, smooth .....12 in. Pitch Diameter
Third drum rope .....⅝ in. Diameter

Boom point sheaves (6) .....18 in. Pitch Diameter

⅞ in. diameter rope required for loads over 200,000 pounds.

LINE PULLS AND SPEEDS

	1-Part Line		2-Part Line	
Drum Pitch Diameter	Pull in Pounds	Speed (Feet/Minute)	Pull in Pounds	Speed (Feet/Minute)
16½ in.	21,100	157	41,600	78.5

Swing Speed:

Standard .....2.25 revolutions/minute
Micro-Swing .....0.65 revolutions/minute

Speeds and line pulls based on engine with torque converter drive operating at full load speed of the output shaft. When torque converter is operating at full stall, line pulls are approximately 220 per cent of those shown in table.

WEIGHTS IN POUNDS

	Crane 40 Ft. Boom
Net weight domestic, approx.	130,150
Working weight, approx.	135,800
Export shipping weight, approx.	135,450
Ship option tons	139

Hook block included in working weight and export shipping weight for lifting crane, but not in domestic net weight.

POWER SPECIFICATIONS

Make - Model	Cummins N-855P
Type	Diesel
Type of drive	Torque Converter
Cylinders	6
Bore x stroke, inches	5½ x 6
Displacement, cubic inches	855
H.P. net @ full load speed	149
Full load speed (R.P.M.)	2,000
Fuel tank capacity, gallons	75
Starting	Elec. - 12 volt
Altitude range, feet	0-9,000

BLOW & GOTE, INC.
815 VT RTE 15E
MORRISVILLE, VT 05661

CAMBRIDGE
RRD 1448 (39)

110 TON TRUCK CRANE

MAXIMUM ALLOWABLE LOADS IN POUNDS — CRANE SERVICE

Boom Length In Feet	Radius In Feet	Boom Angle In Degrees	Boom Point Pin Height (Ft. In.)	Outriggers Set† Over Side or Rear	Without Outriggers On Tires: Over Side	Without Outriggers On Tires: Over Rear
40	12	78	46-6	*220,000	96,900	139,700
	16	74	45-9	*185,000	68,600	97,400
	20	66	44-0	*149,000	45,900	64,600
	25	58	41-3	118,900	34,100	47,900
	30	49	37-6	86,700	26,900	37,800
	35	39	22-6	67,900	22,100	31,100
60	15	79	66-3	*180,000	67,900	97,000
	20	74	65-0	*147,000	45,200	63,900
	25	69	63-6	118,500	33,400	47,200
	30	64	61-3	86,200	26,200	37,100
	35	59	58-6	67,400	21,400	30,300
	40	53	55-3	54,700	17,900	25,500
	50	40	45-9	39,400	13,200	19,100
80	20	78	96-9	*145,000	44,600	63,300
	25	75	84-6	118,200	32,800	46,600
	30	71	83-0	85,900	25,600	36,500
	35	67	81-0	67,000	20,800	29,700
	40	63	78-9	54,300	17,300	24,900
	50	55	72-9	38,900	12,600	18,500
	60	45	64-2	29,900	9,550	14,300
	70	34	52-3	24,000	7,550	11,500
90	20	80	96-9	*143,000	44,300	63,100
	25	76	94-9	*117,200	32,500	46,300
	30	73	93-6	85,700	25,300	36,200
	40	66	89-9	54,100	17,000	24,600
	50	59	84-6	38,600	12,300	18,200
	60	51	77-9	29,600	9,250	14,100
	70	43	68-3	23,800	7,200	11,200
	80	32	56-3	19,600	5,650	9,150
100	25	78	105-0	*116,000	32,200	46,100
	30	75	103-9	85,500	25,000	36,000
	40	69	100-6	53,900	16,700	24,400
	50	63	96-0	38,400	10,600	17,900
	60	56	90-0	29,400	7,950	13,800
	70	49	82-3	23,500	6,100	11,000
	80	41	72-3	19,400	4,650	8,900
	90	31	56-3	16,300	3,700	7,300
110	25	80	115-3	*115,000	31,900	45,700
	30	76	114-3	85,300	24,700	35,600
	40	71	111-3	53,600	16,400	24,000
	50	65	107-3	38,200	11,700	17,600
	60	59	102-0	29,100	8,650	13,500
	70	53	96-3	23,200	6,550	10,600
	80	46	86-9	19,100	5,000	8,550
	90	39	75-9	16,000	3,850	6,950
	100	29	60-9	13,600	2,900	5,650
120	25	80	125-6	*114,000	31,600	45,500
	30	77	124-6	85,100	24,400	35,400
	40	73	121-9	53,400	16,100	23,800
	50	67	118-9	38,000	11,400	17,300
	60	62	113-3	28,900	8,400	13,200
	70	57	107-6	23,000	6,300	10,300
	80	51	100-0	18,800	4,750	8,300
	90	44	90-9	15,700	3,600	6,650
	100	37	79-3	13,300	2,650	5,400
	110	28	63-3	11,400	1,900	4,400
130	30	78	134-6	84,900	24,100	35,100
	40	74	132-3	53,200	15,800	23,500
	50	69	128-9	37,700	11,100	17,000
	60	64	124-6	28,700	8,100	12,900
	70	59	119-3	22,800	6,000	10,000
	80	54	112-6	18,600	4,450	8,000
	90	49	104-0	15,500	3,300	6,400
	100	42	94-9	13,000	2,350	5,100
	110	35	82-6	11,100	1,600	4,100
	120	27	65-9	9,600	950	3,250
140	30	79	144-9	84,700	23,900	34,800
	40	75	142-6	53,000	15,500	23,200
	50	71	139-6	37,500	10,800	16,800
	60	66	135-6	28,500	7,850	12,700
	70	62	130-9	22,500	5,750	9,800
	80	57	124-9	18,300	4,200	7,700
	90	52	117-9	15,200	3,000	6,100
	100	47	108-0	12,800	2,100	4,850
	110	41	98-9	10,900	1,350	3,850
	120	34	85-6	9,350	—	3,000
	130	26	68-3	8,050	—	2,250

Boom Length In Feet	Radius In Feet	Boom Angle In Degrees	Boom Point Pin Height (Ft. In.)	Outriggers Set† Over Side or Rear
150	35	78	154-0	65,600
	40	76	152-9	52,800
	50	72	150-0	37,200
	60	68	146-6	28,200
	70	64	142-0	22,200
	80	60	136-6	18,000
	90	55	130-0	14,900
	100	50	122-6	12,500
	110	45	113-3	10,600
	120	39	102-3	9,050
	130	33	88-6	7,750
160	35	80	164-3	65,300
	40	77	163-3	52,600
	50	73	160-6	37,000
	60	69	157-0	27,900
	70	66	153-0	22,000
	80	62	148-0	17,700
	90	57	142-3	14,600
	100	53	135-3	12,200
	110	48	127-0	10,300
	120	43	117-6	8,750
	130	38	105-9	7,450
170	40	78	173-6	52,400
	50	74	171-0	36,800
	60	71	167-9	27,700
	70	67	164-0	21,700
	80	63	159-3	17,500
	90	60	153-9	14,400
	100	56	147-6	11,900
	110	51	140-0	10,000
	120	47	131-6	8,450
	130	42	121-3	7,150
180	40	78	183-6	52,200
	50	75	180-3	36,500
	60	72	178-3	27,400
	70	68	174-9	21,500
	80	65	170-6	17,200
	90	61	165-3	14,100
	100	58	159-6	11,700
	110	54	152-6	9,800
	120	50	144-9	8,200
	130	46	136-9	6,900
	140	41	125-0	5,800
190	40	79	193-9	51,900
	50	76	191-6	36,300
	60	73	188-9	27,100
	70	70	185-6	21,200
	80	66	181-3	16,900
	90	63	176-9	13,800
	100	60	171-3	11,400
	110	56	165-0	9,450
	120	52	157-9	7,900
	130	48	149-6	6,600
	140	44	139-9	5,500
200	50	77	201-9	36,100
	60	74	199-3	26,900
	70	71	196-0	20,900
	80	68	192-3	16,700
	90	65	187-9	13,600
	100	61	182-9	11,100
	110	58	176-9	9,250
	120	55	170-3	7,650
	130	51	162-6	6,350
	140	47	153-9	5,250
210	50	77	212-3	35,800
	60	75	209-9	26,700
	70	72	206-6	20,700
	80	69	203-0	16,500
	90	66	198-9	13,300
	100	63	194-0	10,900
	110	60	188-6	8,950
	120	56	182-3	7,400
	130	53	175-3	6,050
	140	50	167-3	4,950
220	50	78	222-3	35,600
	60	75	220-0	26,500
	70	73	217-0	20,500
	80	70	213-9	16,200
	90	67	209-9	13,100
	100	64	206-3	10,600
	110	61	200-0	8,700
	120	58	194-3	7,150
	130	55	187-6	5,850
	140	52	180-3	4,700
	150	48	171-9	3,800
	160	45	162-3	2,950

The above ratings apply to machines that are level and standing on hard, level uniform supporting surfaces. Loads must be freely suspended. The radii specified are loaded radii. Ratings include blocks, hooks, slings or other equipment used in handling loads. Proper care must be exercised by the operator at all times to avoid shock or side loadings on the boom. Ratings apply only to machines having booms in first class condition built and recommended by Bucyrus-Erie Company.

†Entire machine supported on both outriggers with rear tires clear of ground.

*Indicates that maximum allowable load is limited by factors other than tipping.

INTERPOLATE: @ 22' RADIUS
= 118500 lbs + 3/5 (147000 − 118500)
= 135,600 LBS

BLOW & COTE, INC.
815 VT RTE 15E
MORRISVILLE, VT 05661

CAMBRIDGE
BRD 1448 (39)

110 TON TRUCK CRANE

BLOW & COTE, INC.
815 VT RTE 15E
MORRISVILLE, VT 05661

HOOK BLOCKS		
Capacity	No. Parts	Feet—Inches Y
8½ Ton	1	3'6"
25 Ton	2	9'0"
60 Ton	6	9'0"
110 Ton	12	9'0"

"Y" dimension determined with boom at 82°.

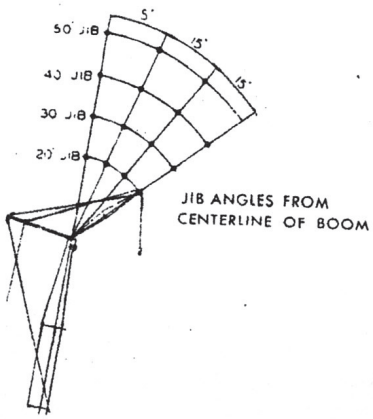

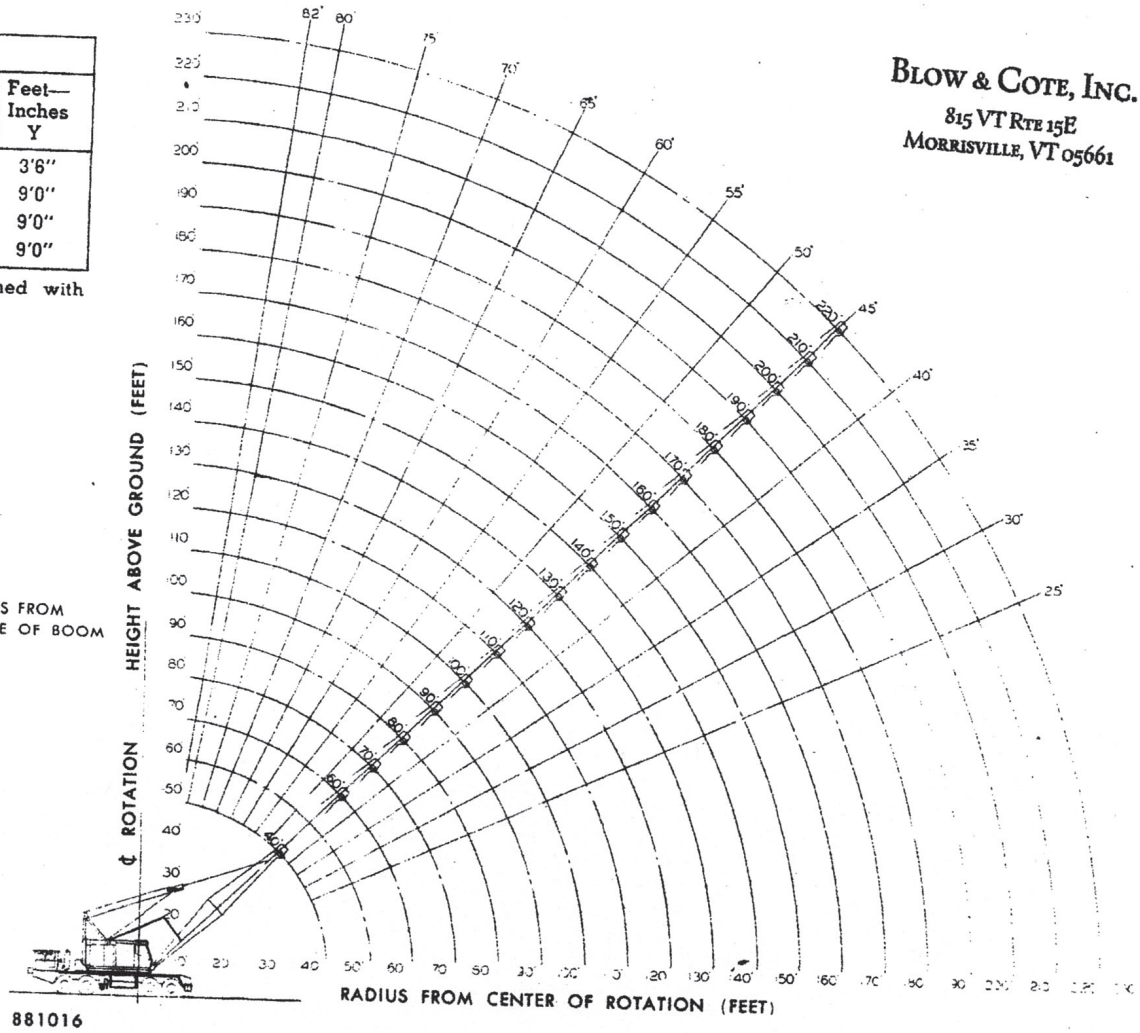

881016

CRANE SERVICE

Loads shown in table are for general crane service with the machine on firm, level ground, with tire pressures not less than 105 psi. For prolonged highway travel, reduce this pressure to 95 psi. Suspension — 14 part tackle with pendants. Intermediate suspension is required on booms 170' and longer. Maximum boom angle is 82°.

RECOMMENDED HOIST TACKLE

Loads Over	16,500	33,000	50,000	67,000	84,000	100,000
Part of Line	2	3	4	5	6	7
		117,000	134,000	151,000	168,000	184,000
		8	9	10	11	12*

*For loads over 200,000 lbs. use ⅞" hoist cable.
Deduct weight of hook blocks, hooks and slings from listed loads.

JIBS

Use jibs for lifting crane service only. Allowable loads on main boom sheaves, with jib attached, must be reduced as follows:

20 ft. jib.....1900 lbs.
30 ft. jib.....2100 lbs.
40 ft. jib.....2500 lbs.
50 ft. jib.....3000 lbs.

Maximum length of boom to which a jib may be attached is 200 feet.
Maximum allowable jib loads are as follows:

Jib Offset* in Degrees	Jib Length			
	20-ft.	30-ft.	40-ft.	50-ft.
0	20,000	17,000	13,000	10,000
15	20,000	17,000	13,000	10,000
30	15,000	12,000	9,000	6,000
45	10,000	7,000	4,000	—

*Maximum offset (angular) from centerline of boom to centerline of jib.

The allowable load over the jib sheave, at any radius from the centerline of rotation of the machine, is the same load that may be lifted over the boom point sheave (without jib) with boom lowered to that radius, but not to exceed the loads in the jib table. For jib loads over 16,500 lbs., use 2-part line.

GENERAL

Maximum boom or boom-jib combinations that can be lifted off the ground unassisted are:

	With Outriggers		
	With Bumper Ctwt.	Without Bumper Ctwt.	Without Outriggers
Boom			
Over Side	210 ft.	200 ft.	130 ft.
Over Rear	220 ft.	210 ft.	140 ft.
Boom-Jib			
Over Side	190 ft. + 30 ft.	170 ft + 50 ft.	100 ft. + 50 ft.
Over Rear	200 ft. + 50 ft.	180 ft + 40 ft.	120 ft. 50 ft.

The maximum boom-jib combination that can be lifted off the ground unassisted over the rear of the carrier with outriggers set and with a front bumper counterweight is 200' + 50'.

Maximum boom or boom-jib combination that can be carried in a lowered position and with A-frame in the lowered position is 110 ft. or 90 ft. plus a 30 ft. jib. With boom-jib combination in a horizontal position, clearance height over the jib mast is 17' 2".

MACHINE EQUIPMENT

Alloy steel tubular "Trigon" boom. 15,600 lbs. outside counterweight, 31" high and 27½" wide, distance between center of jacks with outriggers fully extended is 24' 0", 9,500 lb. front bumper counterweight is used for erection purposes only. Remove bumper counterweight when traveling.

CAMBRIDGE BRD 1448 (39)

T.R. FELLOWS ENGINEERING

134 County Road
Walpole, NH 03608
PO Box 56
Rochester, VT 05767

REGISTERED PROFESSIONAL ENGINEERS
CIVIL – STRUCTURAL

603.756.4811
trifel@myfairpoint.net
802.318.7853
kricket@mapleridgevt.com

Lifting Analysis for 66 Ton Sumitomo LS 120 RHD5 Crane

According to page 14 of this submittal, the total weight of each abutment is 51.2 tons (102,400 lbs). Assuming balanced loading, the maximum load to be carried by the LS 120 RHD5 crane is the sum of the following (see page 17): the total weight of the abutment (102,400 lbs), one 6-sheave 110-ton hook block (3,500 lbs), (2) 36-ton 2" cable slings (450 lbs), (2) 30-ton 1-3/4" shackles (60 lbs), (2) HCLW 44 ton Tilt-Up blocks (640 lbs), (2) 24' 42 ton 1-1/2" cable slings (310 lbs), (4) 17-ton shackles (64 lbs) and (4) WRA 160 Wire Rope Anchors (32 lbs). The maximum load to be carried by the crane is therefore:

102,400 lbs + 3,500 lbs + 640 lbs + 310 lbs + 450 lbs + 60 lbs + 64 lbs + 32 lbs = 107,500 lbs

Unbalanced loading is not an issue in this lifting situation when checking the crane lift capacity because each abutment is lifted by only one crane. Each abutment will be picked in accordance with the Abutment 1 & 2 Lift Plan View (see page 15), the Overall Abutment Lift Elevation (see page 16), the Abutment Lift Equipment and Sequence Descriptions (see page 17), the Typical Abutment Lift Diagram – Side View (see page 18), the Typical Abutment Lift Diagram – End View (see page 19), and the Abutment Wire Rope Lifting Point Plan (see page 20).

According to the attached lifting charts for the 66 Ton Sumitomo LS 120 RHD5 Crane (see page 30), with a 50 ft boom length, when the crane is positioned with maximum radius of load equal to 15 ft from centerline of machine, the lift capacity of the crane is 120,813 lbs. This safely exceeds the required capacity of 107,500 lbs.

The approximate uniform average pressure exerted by the crane tracks when loaded is as follows:

(140,000 lbs + 107,500 lbs) / (2 x 16.9 ft x 2.6 ft) = 2816 psf

This pressure is averaged over the full area of the crane tracks. In order to reduce the ground pressure under the toe of the tracks during the lift, and to ensure the influence line extending at a 45 degree angle from the toe of the crane tracks remains behind the final abutment location (see page 16), (2)-5'x18'x10" thick reinforced concrete distribution pads (see page 24) will be placed under the toes of the tracks. Conservatively assuming the entire lifted load is transferred through the toe of the tracks to these distribution pads, this will reduce the average ground pressure to:

(140,000 lbs + 107,500 lbs) / (2 x 5 ft x 18 ft) = 1375 psf

In fact, some of the load will still be transferred to the ground surface through the portion of the crane tracks bearing directly on the ground surface (not on the distribution pads), so the above ground pressure is conservative.

Care shall be taken to ensure that the crane is positioned on a firm, level, and uniform supporting surface per the manufacturer's recommendations.

LS-120RHD-5 SN: LS120-0065

Boom Rated Load Table

Boom Length (ft)	40		50		60		70		80		90		100	
	Load	Angle	Load	Angle	Load	Angle	Load	Angle	Load	Angle	Load	Angle	Load	Angle
Working Radius (ft)	lbs	deg	lbs	deg	lbs	deg	lbs	deg	lbs	deg	lbs	deg	lbs	deg
12	132277	78.9												
13	132277	77.4	131175	80.0										
15	123018	75.0	120813	78.0										
16	102735	72.5	102295	76.1	102074	78.5								
18	87964	70.0	87744	74.1	87524	76.9	87303	78.8						
20	76941	67.4	76721	72.2	76500	75.2	76280	77.4	76059	79.0				
23	61289	62.2	61068	68.1	60848	71.9	60627	74.6	60407	76.6	59966	78.1	59745	79.3
26	50706	56.6	50486	64.0	50265	68.6	50045	71.8	49824	74.1	49604	75.9	49384	77.4
28	43211	50.7	42990	59.7	42770	65.2	42549	68.9	42329	71.7	42108	73.9	41888	75.4
33	37699	44.1	37479	55.1	37258	61.6	37038	66.0	36817	69.2	36597	71.6	36376	73.5
39	30424/25794	30.3	29321	45.1	29101	54.1	28881	59.9	28660	64.0	28440	67.1	28219	69.5
46			24030	32.8	23810	45.8	23589	53.4	23369	58.6	23149	62.4	22928	65.4
53					19842	36.0	19621	46.3	19401	52.9	19180	57.5	18960	61.2
59							16986	38.1	16755	46.6	16535	52.4	16314	56.8
66							15212/43211	30.3	14551	39.6	14110	46.9	13889	52.1
72									12566	31.4	12346	40.9	12125	47.1
79											10803	33.9	10582	41.7
85											9921/54895	30.1	9480	35.6
92													8378/60627	30.3
98														
105														
112														
118														
125														
Parts of Line	6		6		5		4		4		3		3	

Rated load/working radius

1. The rated loads shown in the table above are values that apply to a machine on a firm level and uniform supporting surface and that satisfy 2 conditions:
(a) <78% of the tipping load and (b) front stability >/= 1.15 x front stablity prescribed by the mobile crane constrcution code.
2. The load that can be lifted during operation is the value computed by subtracting the entire weight of the lifting attachments, such as a hook and a bucket, from the value listed in the table above (60-ton hook: 1.1tons; 20-ton hook: 0.64tons; 9-ton hook: 0.4 tons).
3. When performing work, be sure to extend crawler to high mast.
4. If the number of reevings is greater than the value in the table above, then the hook will not descend to the ground.
5. When working with a clam shell excavator, a grab bucket, or a lifting magnet, the maximum boom length is 70ft.
6. If a jib is fitted then the rated load of the main boom is the value computed by subtracting the offset load (fitted with hook for jib) in the table below from the value listed in the table above.
7. The range of the length of the boom to which a jib can be mounted is 70 to 140ft.
8. The range of the length of boom to which a short jib can be mounted is 40 to 170ft.
9. The rated load of a short jib is the value computed by subtracting 441lbs from the rated load at the same working radius for the main boom, but the maximum rated 14,330lbs.

CAMBRIDGE BRD 1448 (39)

BLOW & COTE, INC.
815 VT RTE 15E
MORRISVILLE, VT 05661

Working Range Diagram LS-120RH-5

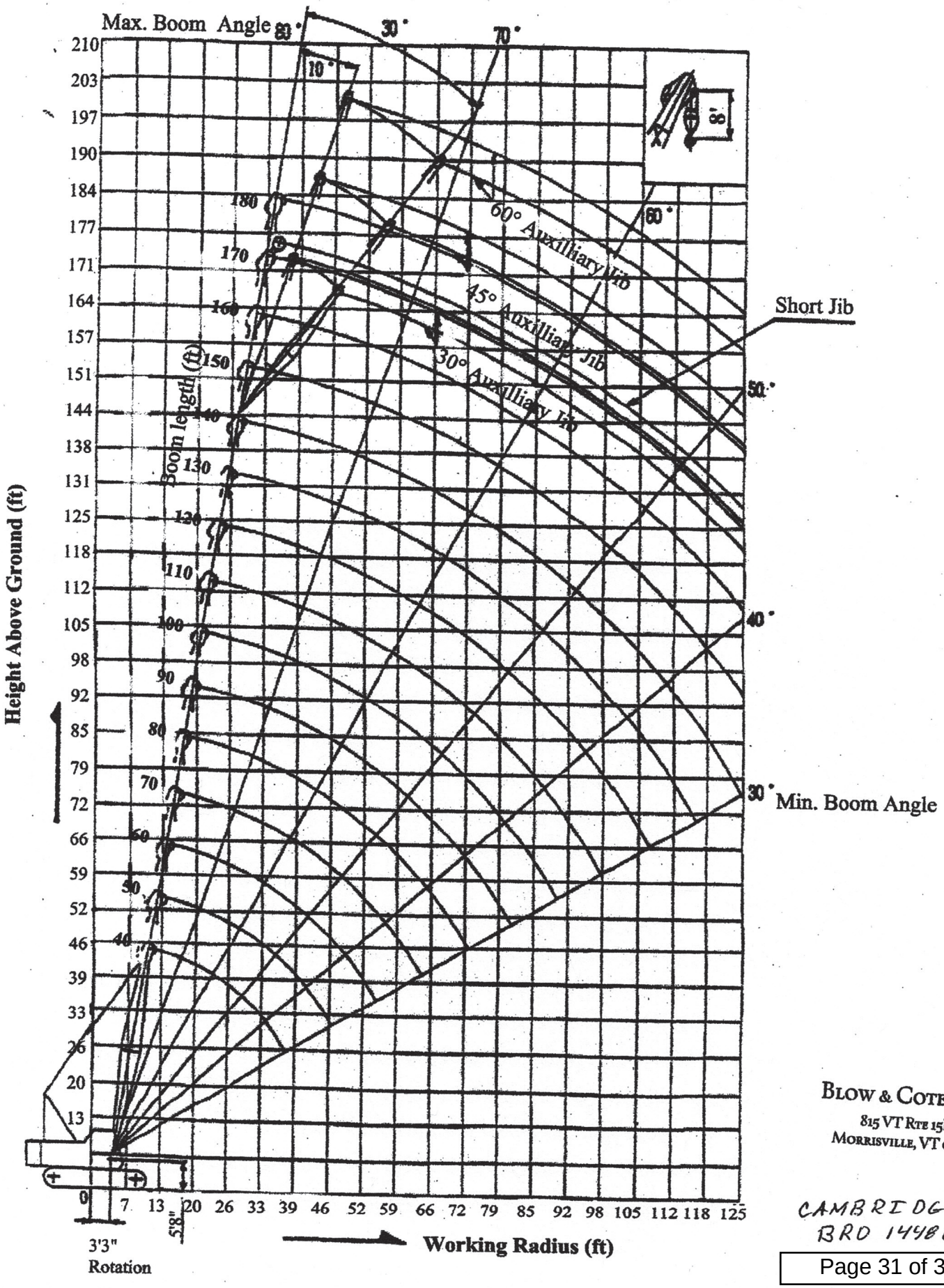

BLOW & COTE, INC.
815 VT RTE 15E
MORRISVILLE, VT 05661

CAMBRIDGE
BRO 1448(39)

LS-120RH-D

Main Boom
54"x51"
10' Inserts, 1
20' Inserts, 2
30' Inserts, 1
120' Total

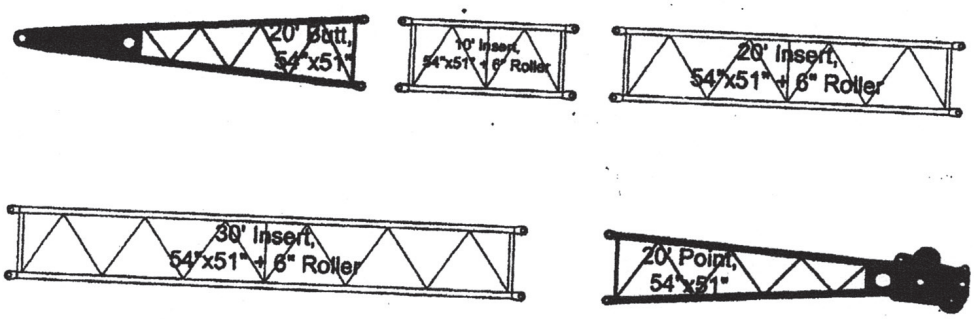

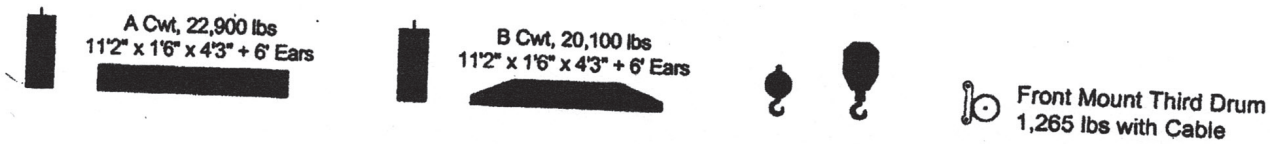

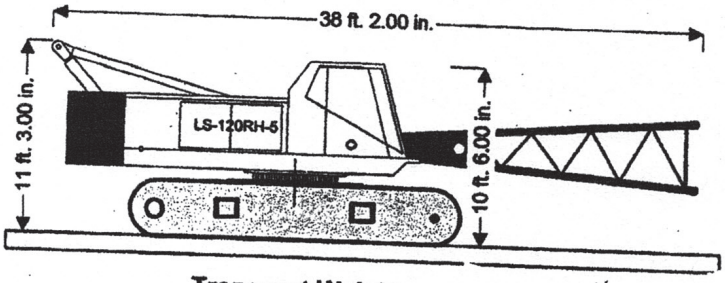

Transport Weight
20' Base Section
92,000 Lbs

Width Retracted 11' 6"
Width Extended 15' 7"
Length of Sideframe 19' 6"
Track Shoes 31"

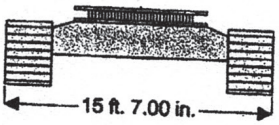

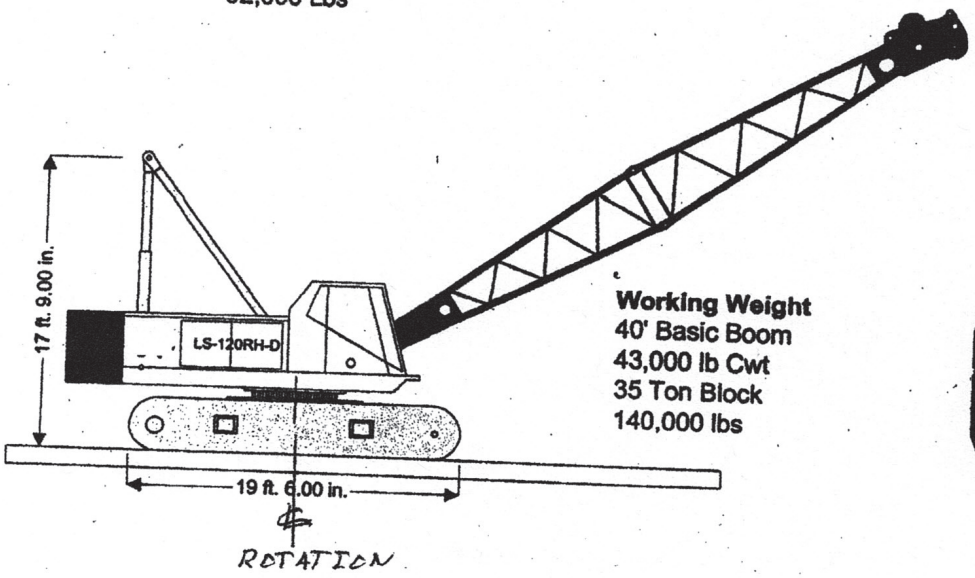

Working Weight
40' Basic Boom
43,000 lb Cwt
35 Ton Block
140,000 lbs

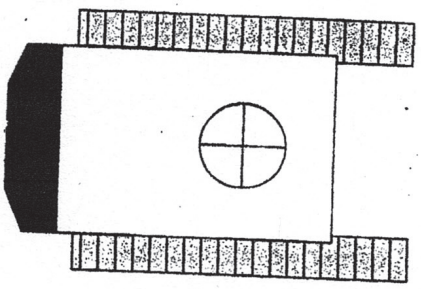

BLOW & COTE, INC.
815 VT RTE 15E
MORRISVILLE, VT 05661

CAMBRIDGE
BRO 1448 (39)

1-Part Slings

MECHANICAL SPLICE
IWRC

2-LEG BRIDLE

RATED CAPACITY IN TONS OF 2,000 lbs.
RATED CAPACITIES SHOWN APPLY ONLY TO 6X19 AND 6X36 CLASSIFICATION WIRE ROPE

ROPE DIA. (IN)	VERTICAL			60°			45°			30°		
	IPS	EIPS	EEIPS	IPS	EIPS	EEIPS	IPS	EIPS	EEIPS	IPS	EIPS	EEIPS
1/4	1.1	1.3	1.4	0.97	1.1	1.2	0.79	0.91	1.0	0.56	0.65	0.7[illegible]
5/16	1.7	2.0	2.2	1.5	1.7	1.9	1.2	1.4	1.6	0.87	1.0	1.1[illegible]
3/8	2.5	2.9	3.2	2.2	2.5	2.7	1.8	2.0	2.2	1.2	1.4	1.6
7/16	3.4	3.9	4.3	2.9	3.4	3.7	2.4	2.7	3.0	1.7	1.9	2.1
1/2	4.4	5.1	5.5	3.8	4.4	4.8	3.1	3.6	3.9	2.2	2.5	2.8
9/16	5.5	6.4	7.0	4.8	5.5	6.1	3.9	4.5	5.0	2.8	3.2	3.5
5/8	6.8	7.8	8.6	5.9	6.8	7.5	4.8	5.5	6.1	3.4	3.9	4.3
3/4	9.7	11	12	8.4	9.7	11	6.9	7.9	8.7	4.9	5.6	6.2
7/8	13	15	17	11	13	14	9.3	11	12	6.6	7.6	8.3
1	17	20	22	15	17	19	12	14	15	8.5	9.8	11
1 1/8	21	24		18	21		15	17		10	12	
1 1/4	26	30		22	26		18	21		13	15	
1 3/8	31	36		27	31		22	25		15	18	
1 1/2	37	42		32	37		26	30		18	21	
1 5/8	43	49		37	42		30	35		21	24	
1 3/4	49	57		43	49		35	40		25	28	
1 7/8	56	64		49	56		40	46		28	32	
2	64	73		55	63		45	52		32	37	
2 1/8	69	80		60	69		49	56		35	40	
2 1/4	77	89		67	77		55	63		39	44	
2 3/8	86	99		75	85		61	70		43	49	
2 1/2	94	109		82	94		67	77		47	54	
2 5/8	104	119		90	103		73	84		52	60	
2 3/4	113	130		98	113		80	92		57	65	
2 7/8	123	141		106	122		87	100		61	71	
3	133	153		115	133		94	108		67	77	
3 1/8	144	165		124	143		102	117		72	82	
3 1/4	154	177		134	153		109	125		77	89	
3 3/8	165	190		143	165		117	135		83	95	
3 1/2	177	203		153	176		125	144		88	102	

RATED CAPACITIES BASKET HITCH BASED ON D/d RATIO OF 25
RATED CAPACITIES BASED ON PIN DIAMETER NO LARGER THAN NATURAL EYE WIDTH OR LESS THAN THE NOMINAL SLING DIAMETER
RATED CAPACITIES BASED ON DESIGN FACTOR OF 5
HORIZONTAL SLING ANGLES LESS THAN 30 DEGREES SHALL NOT BE USED

BLOW & COTE, INC.
815 VT RTE 15E
MORRISVILLE, VT 05661

CAMBRIDGE
BRD 1448 (39)

MECHANICAL SPLICE
IWRC

VERTICAL, CHOKER OR VERTICAL BASKET

RATED CAPACITY IN TONS OF 2,000 lbs.
RATED CAPACITIES SHOWN APPLY ONLY TO 6X19 AND 6X36 CLASSIFICATION WIRE ROPE

ROPE DIAMETER (INCHES)	VERTICAL			CHOKER			VERTICAL BASKET		
	IPS	EIPS	EEIPS	IPS	EIPS	EEIPS	IPS	EIPS	EEIPS
1/4	0.56	0.65	0.71	0.41	0.48	0.52	1.1	1.3	1.4
5/16	0.87	1.0	1.1	0.64	0.74	0.81	1.7	2.0	2.2
3/8	1.2	1.4	1.6	0.92	1.1	1.2	2.5	2.9	3.2
7/16	1.7	1.9	2.1	1.2	1.4	1.6	3.4	3.9	4.3
1/2	2.2	2.5	2.8	1.6	1.9	2.0	4.4	5.1	5.5
9/16	2.8	3.2	3.5	2.0	2.4	2.6	5.5	6.4	7.0
5/8	3.4	3.9	4.3	2.5	2.9	3.2	6.8	7.8	8.6
3/4	4.9	5.6	6.2	3.6	4.1	4.5	9.7	11	12
7/8	6.6	7.6	8.3	4.8	5.6	6.1	13	15	17
1	8.5	9.8	11	6.3	7.2	8.0	17	20	22
1 1/8	10	12		7.9	9.1		21	24	
1 1/4	13	15		10	11		26	30	
1 3/8	15	18		12	13		31	36	
1 1/2	18	21		14	16		37	42	
1 5/8	21	24		16	18		43	49	
1 3/4	25	28		19	21		49	57	
1 7/8	28	32		21	24		56	64	
2	32	37		24	28		64	73	
2 1/8	35	40		27	31		69	80	
2 1/4	39	44		30	35		77	89	
2 3/8	43	49		33	38		86	99	
2 1/2	47	54		37	42		94	109	
2 5/8	52	60		40	46		104	119	
2 3/4	57	65		44	51		113	130	
2 7/8	61	71		48	55		123	141	
3	67	77		52	60		133	153	
3 1/8	72	82		56	64		144	165	
3 1/4	77	89		60	69		154	177	
3 3/8	83	95		64	74		165	190	
3 1/2	88	102		69	79		177	203	

RATED CAPACITIES BASKET HITCH BASED ON D/d RATIO OF 25
RATED CAPACITIES BASED ON PIN DIAMETER NO LARGER THAN NATURAL EYE WIDTH OR LESS THAN THE NOMINAL SLING DIAMETER
RATED CAPACITIES BASED ON DESIGN FACTOR OF 5
HORIZONTAL SLING ANGLES LESS THAN 30 DEGREES SHALL NOT BE USED

BLOW & COTE, INC.
815 VT RTE 15E
MORRISVILLE, VT 05661

CAMBRIDGE
BRO 1448 (39)

CONAC

WIRE ROPE ANCHORS - DATA SHEET

Clearances - Projected Installation			Parallel Installation		Transverse Install'n	
Anchor Part No.	Suggested Projection A [in]	Min End Distance B [in]	Edge Dist. at 2,200 psi E_{22} [in]	Edge Dist. at 4,500 psi E_{45} [in]	Edge Dist. at 2,200 psi F_{22} [in]	Edge Dist. at 4,500 psi F_{45} [in]
WRA 008	2-3/8	10-1/2	1-1/2	1-1/4	2-5/8	2-5/8
WRA 012	2-1/2	12	1-3/4	1-1/2	2-3/4	2-3/4
WRA 016	2-3/4	13-3/4	2-3/8	1-3/4	3-3/8	3-3/8
WRA 020	3-1/8	16-1/2	2-3/4	2	3-1/2	3-1/2
WRA 025	3-3/8	17-3/4	3-1/8	2-1/8	3-5/8	3-5/8
WRA 038	4	19-1/2	4-3/8	3	4-3/8	4-3/8
WRA 050	4	20-1/2	5-3/4	4	5-3/4	4-3/8
WRA 063	4-1/2	22-3/4	6-1/4	4-3/8	6-1/4	5-3/8
WRA 080	5	25-1/2	7-7/8	5-1/2	7-7/8	5-1/2
WRA 099	5-1/2	28-3/4	8-3/4	6-1/8	8-3/4	6-1/8
WRA 120	6	31-3/4	11	7-5/8	11	7-5/8
WRA 160	6-3/4	36-1/2	12	8-1/2	12	8-1/2
WRA 180	7	41-3/4	13-3/8	9-3/8	13-3/8	9-3/8
WRA 250	8	47-1/2	14-3/4	10-1/2	14-3/4	10-1/2

NOTE: Minimum spacing between adjacent anchors = 2 x B
Minimum panel thickness = 2 x E for parallel installation.
Minimum panel thickness = 2 x F for transverse installation.

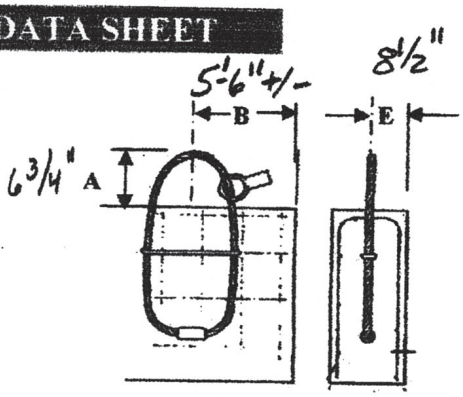

Projected and Parallel Installation

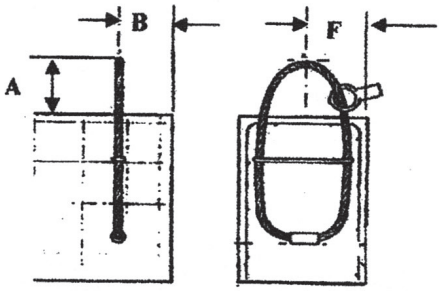

Projected and Transverse Installation

Clearances - Recessed Installation			Parallel Installation		Transverse Install'n	
Anchor Part No.	Depth below surface G [in]	Min End Distance H [in]	Edge Dist. at 2,200 psi J_{22} [in]	Edge Dist. at 4,500 psi J_{45} [in]	Edge Dist. at 2,200 psi K_{22} [in]	Edge Dist. at 4,500 psi K_{45} [in]
WRA 020	9/16	23-1/2	1-3/4	1-1/2	3-3/8	3-3/8
WRA 038	9/16	29	3-1/8	2-1/8	4	4
WRA 063	11/16	33-1/2	4-3/4	3-3/8	5-3/8	5-3/8
WRA 099	1/2	42-1/2	7	5	7	6
WRA 160	1/2	53	9-1/2	6-5/8	9-1/2	7-1/8
WRA 250	1/2	67	12	8-1/2	12	8-5/8

NOTE: Minimum spacing between adjacent anchors = 2 x H
Minimum panel thickness = 2 x J for parallel installation.
Minimum panel thickness = 2 x K for transverse installation.

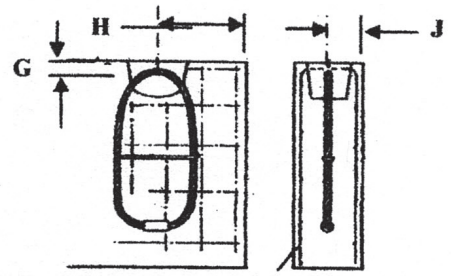

Recessed and Parallel Installation

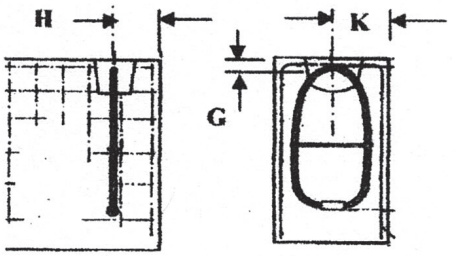

Recessed and Transverse Installation

(4) WRA 160 (2) EACH END PER ABUTMENT

BLOW & COTE, INC.
815 VT RTE 15E
MORRISVILLE, VT 05661

CAMBREDGE
BRD 1448 (39)

CONAC

WIRE ROPE ANCHORS - DATA SHEET

WRA Series WIRE ROPE ANCHORS

Manufactured from high-quality wire rope, with steel swage.

Dimensions & Load Capacities

Nominal System Capacity	Anchor Part No.	Color Code	Allowable Capacity T_A [lb]	Loop Length L [in]	Rope Diameter D [in]	Weight 100 pcs [lb]	Min. Reinf. Mesh Depth M [in]	Min. Reinf. Mesh Area [in^2/ft]
0.8 T	**WRA 008**	White	1,800	8	0.236	18	12	0.062
1.2 T	**WRA 012**	Red	2,700	9	0.276	26	14	0.062
1.6 T	**WRA 016**	Pink	3,600	9-3/4	0.315	38	14	0.062
2 T	**WRA 020**	Lt green	4,500	11-3/4	0.354	60	17	0.089
2.5 T	**WRA 025**	Dark gray	5,600	12-3/4	0.394	66	20	0.089
3.8 T	**WRA 038**	Emerald	9,000	14-1/2	0.472	110	22	0.089
5 T	**WRA 050**	Lt yellow	11,700	15	0.551	181	22	0.089
6.3 T	**WRA 063**	Lt blue	14,150	16-3/4	0.630	242	24	0.089
8 T	**WRA 080**	Lt gray	18,000	18-7/8	0.709	353	27	0.104
10 T	**WRA 099**	Dark purple	22,450	21	0.787	463	31	0.104
12 T	**WRA 120**	Yellow	28,100	23-1/4	0.866	661	35	0.104
16 T	**WRA 160**	Lt purple	35,950	26-3/8	1.024	1,036	39	0.104
18 T	**WRA 180**	Yellow-grn	44,950	29-1/2	1.102	1,300	45	0.178
25 T	**WRA 250**	Lt brown	56,200	33-1/2	1.260	1,850	51	0.178

NOTE: Allowable Tension Capacity is based on a Safety Factor of 4:1 against wire rope breakage
Allowable Tension Capacity is based on use in 2,200 psi normal weight concrete.
No additional strength increase can be gained in higher strength concrete.
Additional sizes available with capacities up to 220,000 lb [110 tons].

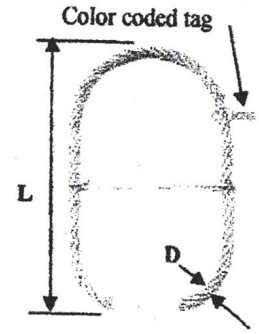

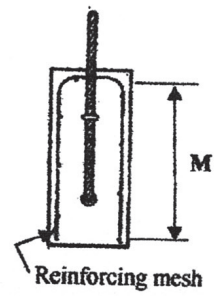

INSTALLATION METHODS

PROJECTED INSTALLATION
No extra reinforcement required
See following page.

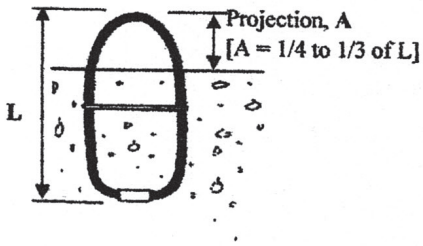

RECESSED INSTALLATION
No extra reinforcement required
See following page.

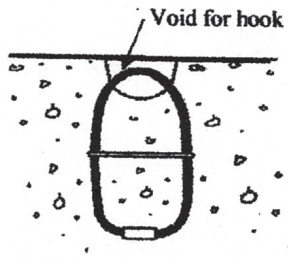

PROJECTED INSTALLATION
WITH REINFORCEMENT

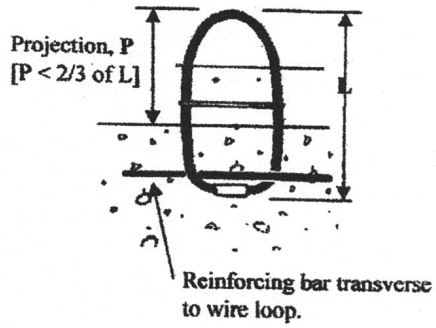

WBR Series SHEAR BARS

Use for reinforcement of Wire Rope Anchor

Nominal System Capacity	Anchor Part No.	Use with Wire Rope Part No.	Projection P [in]	Diameter R [in]	Length S [in]	Weight 100 pcs [lb]
0.8 T	**WBR 008**	WRA 008	5	[#3] 7/16	13-3/4	68
1.2 T	**WBR 012**	WRA 012	5-1/2	[#3] 7/16	15-3/4	76
1.6 T	**WBR 016**	WRA 016	6	[#3] 7/16	17-3/4	84
2 T	**WBR 020**	WRA 020	7	[#4] 9/16	19-1/4	128
2.5 T	**WBR 025**	WRA 025	8	[#4] 9/16	21-1/2	144
3.8 T	**WBR 040**	WRA 038	9	[#5] 5/8	23	198
5 T	**WBR 063**	WRA 050	9-1/2	[#5] 5/8	27-1/2	238
6.3 T	**WBR 063**	WRA 063	10-1/2	[#5] 5/8	27-1/2	238
8 T	**WBR 080**	WRA 080	12	[#6] 3/4	33-1/2	450
10 T	**WBR 125**	WRA 099	13-1/2	[#6] 3/4	39-1/2	546
12 T	**WBR 125**	WRA 120	14-1/2	[#6] 3/4	39-1/2	546
16 T	No Part #	WRA 160	16-1/2	[#7] 7/8	48	818
18 T	No Part #	WRA 180	18-1/2	[#8] 1	54	1,156
25 T	No Part #	WRA 250	21	[#9] 1-1/8	60	1,700

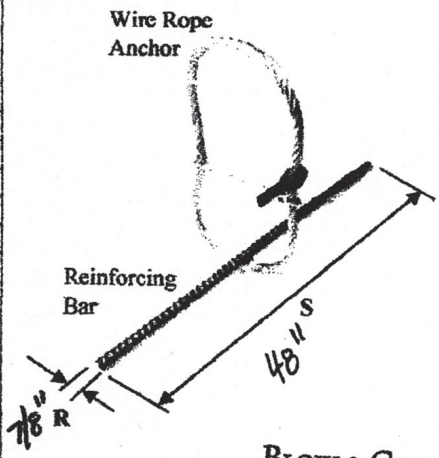

BLOW & COTE, INC.
815 VT RTE 15E
MORRISVILLE, VT 05661

CAMBRIDGE
BRD 1448 (39)

HCLW Series Tilt-Up Blocks

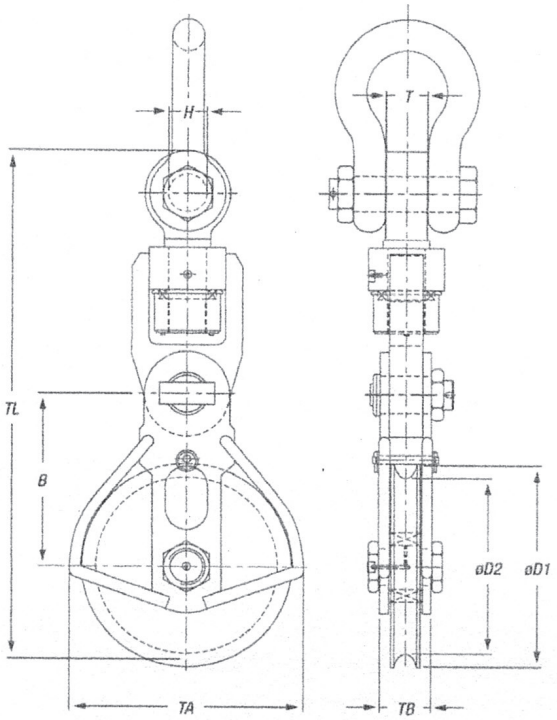

Swivel Eye

Stock Number	WLL (US Tons)	Wire Diameter (Inches)	Dimensions (Inches)								Weight (lbs)
			D1	D2	B	H	T	TA	TB	TL	
HCLW 355.32.1.27.S	30	1-1/8 - 1-1/4	16-9/16	14	14-3/4	1-3/4	2-1/4	18-3/4	4-7/16	39-1/8	265
HCLW 355.36.1.32.S	35	1-1/4 - 1-7/16	16-9/16	14	14-3/4	1-3/4	2-1/4	18-3/4	4-13/16	39-1/8	265
HCLW 430.38.1.32.S	35	1-1/4 - 1-1/2	19-1/2	16-15/16	16-5/16	1-3/4	2-1/4	21-11/16	4-7/8	42-3/16	290
HCLW 430.38.1.40.S	44	1-1/4 - 1-1/2	19-1/2	16-15/16	16-5/16	2-1/16	2-3/4	21-11/16	4-13/16	43-9/16	320
HCLW 520.44.1.55.S	60	1-3/4 - 2	23-7/8	20-1/2	19-1/8	2-13/16	3-15/16	25-5/8	4-7/8	51-13/16	465
HCLW 520.52.1.55.S	60	1-3/4 - 2	23-7/16	20-1/2	19-1/8	2-5/16	3-1/8	25-5/8	5-3/16	51-1/2	490
HCLW 630.58.1.81.S	89	1-3/4 - 2-1/4	27-15/16	24-13/16	22-5/8	3-9/16	3-15/16	30-9/16	6	73-1/4	882
HCLW 630.64.1.81.S	89	2-1/4 - 2-1/2	27-15/16	24-13/16	22-5/8	3-9/16	3-15/16	30-9/16	6	73-1/4	882

Minimum Ultimate Strength = 4 x WLL
Models available up to 350 Ton Capacity
Other wire rope sizes available on request
Available with jaw end, hook, round or oblong swivel eye
All blocks Proof Tested and supplied with Factory Cerfiticates

www.associatedwirerope.com

ROPEBLOCK

Office 310.448.5444
Fax 310.448.5446
sales@awrrinc.com

Associated WIRE ROPE & RIGGING