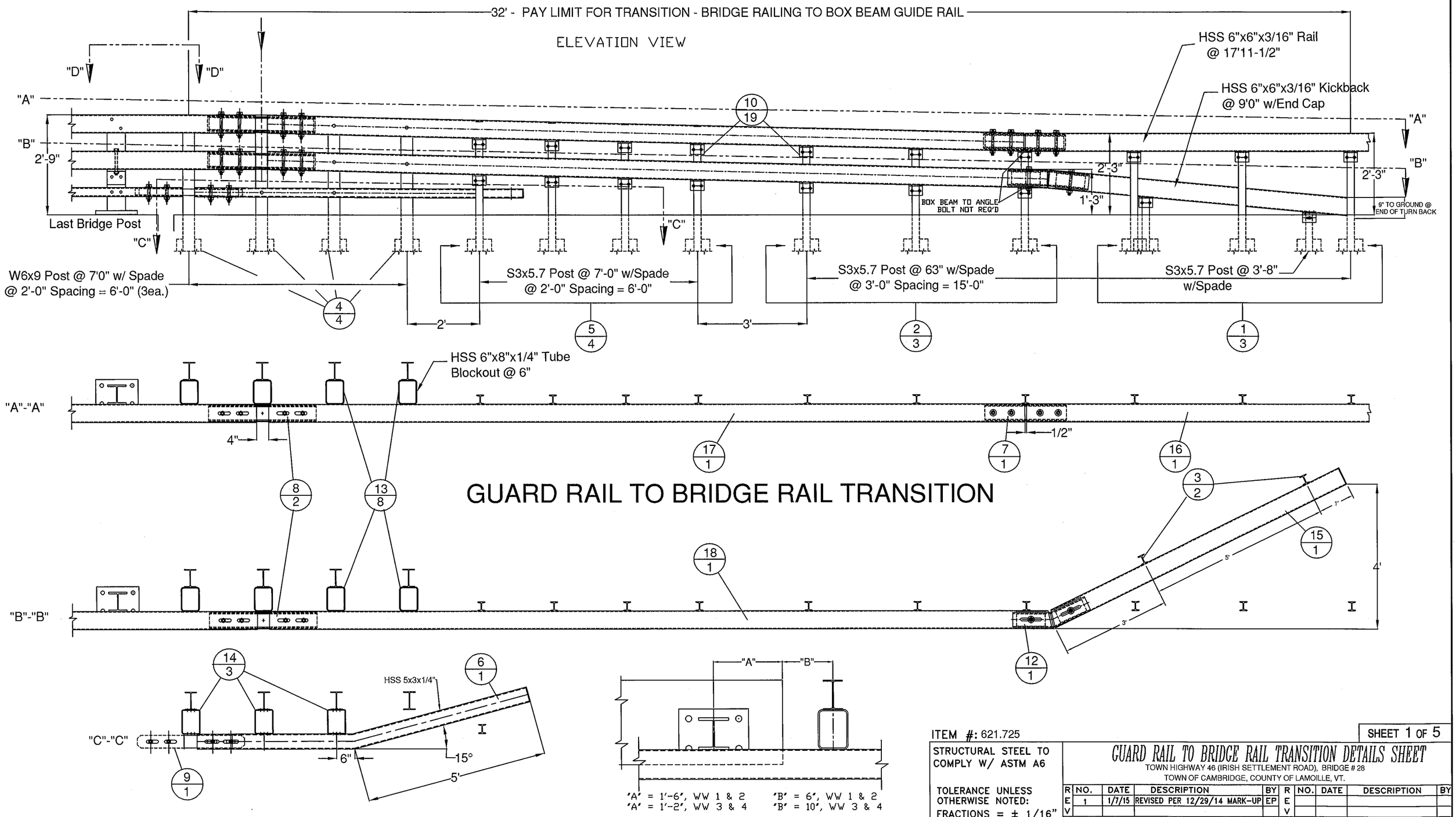

ITEM #: 621.725

STRUCTURAL STEEL TO COMPLY W/ ASTM A6

TOLERANCE UNLESS OTHERWISE NOTED:
FRACTIONS = ± 1/16"
ANGLES = ± 1/2°
DIAMETERS = ± 1/32"

SHEET 1 OF 5

GUARD RAIL TO BRIDGE RAIL TRANSITION DETAILS SHEET

TOWN HIGHWAY 46 (IRISH SETTLEMENT ROAD), BRIDGE # 28
TOWN OF CAMBRIDGE, COUNTY OF LAMOILLE, VT.

REV	NO.	DATE	DESCRIPTION	BY
1	1	1/7/15	REVISED PER 12/29/14 MARK-UP	EP

REV	NO.	DATE	DESCRIPTION	BY

ELDERLEE, INC.
OAKS CORNERS, NEW YORK 14518
E-Mail: dlong@elderlee.com / epeek@elderlee.com
Tel: 315-789-6670 Fax: 315-789-6615

AISC CERTIFIED FABRICATOR

DRAWN	E.P.	12/3/14
CHECKED	D.L.	12/3/14
APPROVED	.	.
SCALE	SCHEMATIC	
DRAWING NO.	F.R.L.-CAMBRIDGE-T	

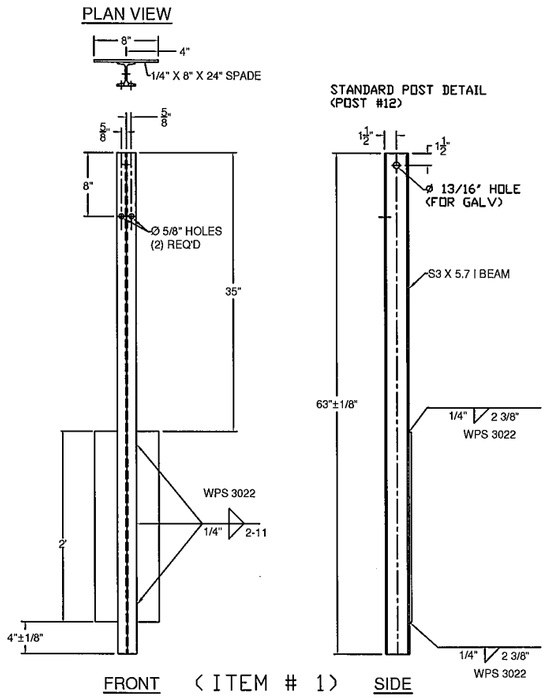

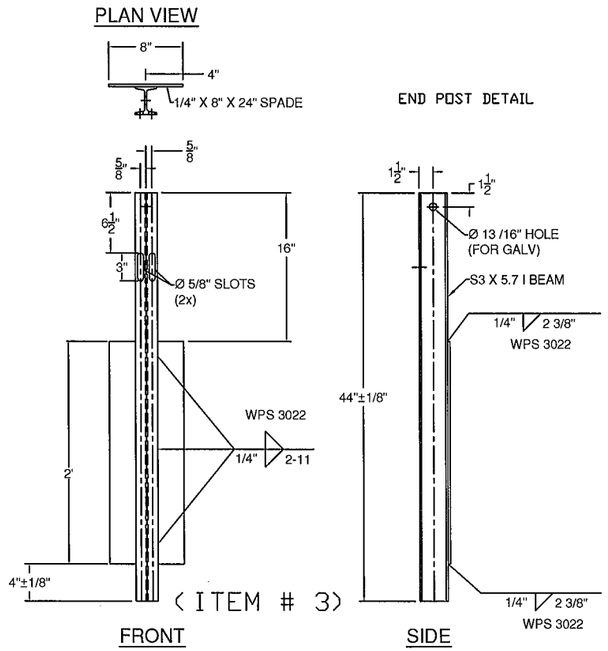

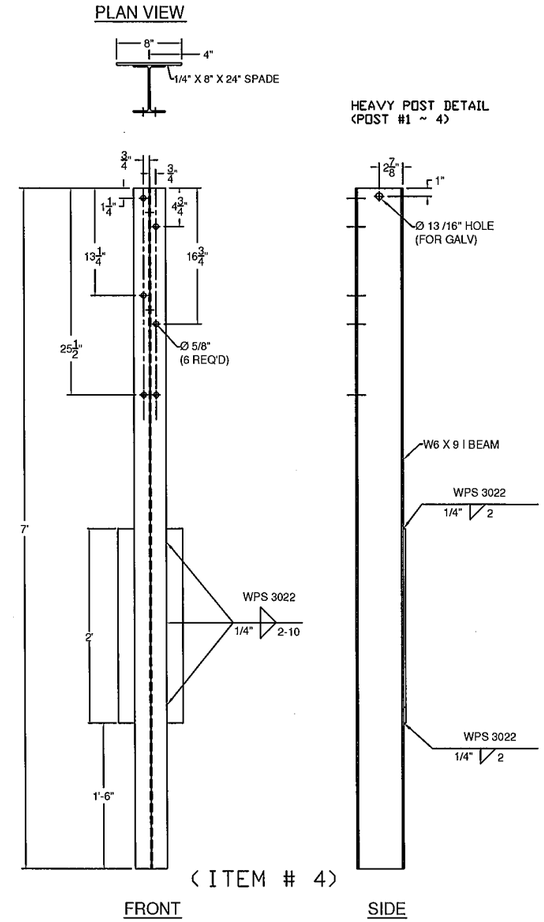

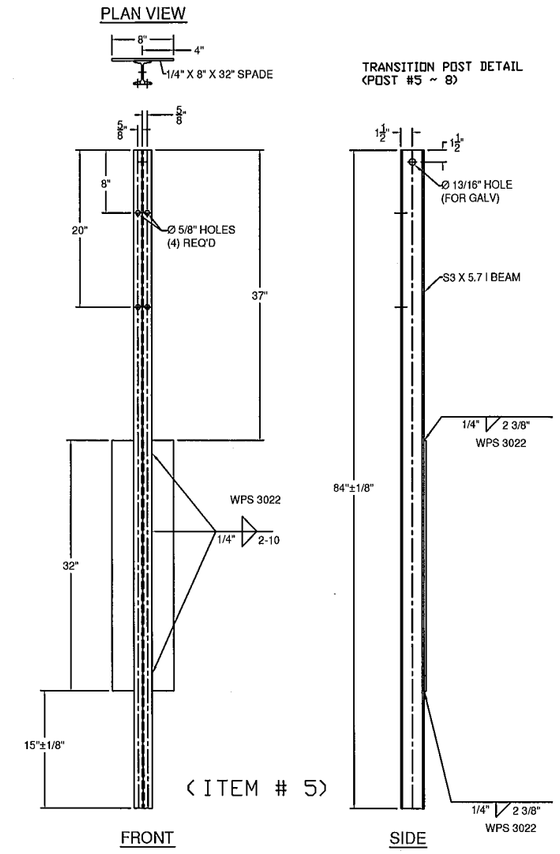

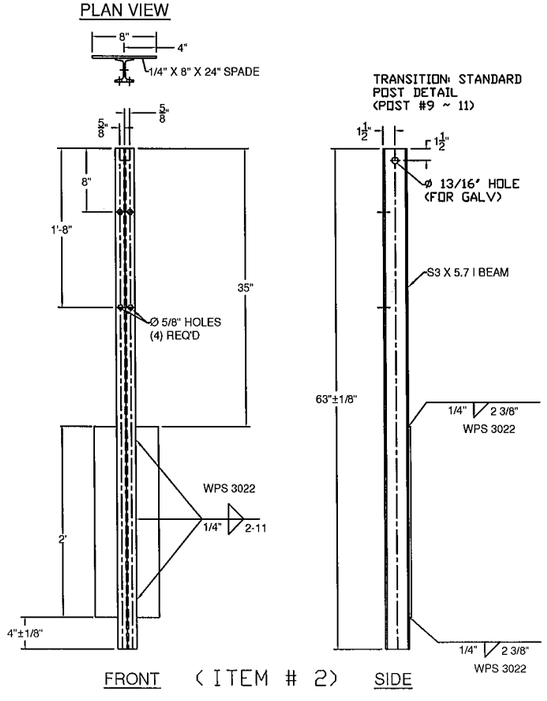

GENERAL NOTES:

1) ALL RAILING IS TO BE FABRICATED AND ERECTED ACCORDING TO SECTION 525 OF THE STANDARD SPECIFICATIONS.
2) BOLTS SHALL BE TORQUED SNUG TIGHT (APPROXIMATELY 100 FT-LB).
3) PROTRUSIONS CAUSED BY WELDING OR GALVANIZING ARE NOT PERMITTED ON THE ADJOINING SURFACES OF THE BOX BEAM RAILS, SPLICE TUBES AND FILL PLATES.
4) BOX BEAM TUBE AND STEEL POST MATERIALS, DIMENSION SIZES AND NOTES SHALL BE THE SAME AS THOSE OF THE BRIDGE RAIL, UNLESS OTHERWISE NOTED.
5) ANY BENDING OF RAIL SHALL BE DONE AT THE FABRICATION PLANT. RADII GREATER THAN 16' TO BE CURVED ON A TUBE BENDING MACHINE, RADII EQUAL OR LESS THAN 16' TO BE "PIE CUT" AND WELDED. CURVED RAILING WIIL HAVE AN 18" LENGTH ON EACH END STRAIGHT TO ACCOMADATE SPLICES. "PIE CUTS ARE LOCATED SO AS TO NOT CONFLICT WITH POST FASTENING HOLES. PIE CUTS WILL BE WELDED ACCORDING TO PROCEDURE WPS-3026.

BILL OF MATERIALS (EACH CORNER)

ITEM #	QTY.	COMPONENT #	DESCRIPTION	MATERIAL (ASTM)
1	3	0013.57021	S3 X 5.7 POST, PUNCH 8' W/SPD @ 63' LG	ASTM A572 Gr. 50
2	3	0013.57025	S3 X 5.7 POST, PUNCH 8', & 20' W/SPD @ 63' LG	ASTM A572 Gr. 50
3	2	0013.57060	S3 X 5.7 END POST W/SPD @ 3'-8' LG	ASTM A572 Gr. 50
4	4	0013.09001	W6 X 9 POST @ 7' W/SPD & 5/8' HOLES	ASTM A572 Gr. 50
5	4	0013.57010	S3 X 5.7 POST, PUNCH 8' & 20', W/8X32' SPADE @7'	ASTM A572 Gr. 50
6	1	0033.80403	3 X 5' BTM TRANS RAIL W/5'-0" KB, EXP END	A500 Gr. B
7	1	0033.00640	HSS 5X5 TUBE SPLICE @27' LG W/ 1/4' SHIMS	A500 Gr. B / A572 Gr 50
8	2	0033.00730	HSS 5x5 EXP TUBE SPLICE @ 36' LG W/ 1/4' SHIMS	A500 Gr. B / A572 Gr 50
9	1	0033.00930	BR EXP BAR SPLICE 2-1/8' X 4-1/4' @ 36' LG	ASTM A36
10	19	0054.00050	REG BB SHELF ANGLES @ 4-1/2'	ASTM A36
12	1	0054.00074	HSS 5 X 5 X 5/16' DBL BEND TUBE SPL @ 27' LG,	A500 Gr. B / A572 Gr 50
13	8	0054.00563	6 X 8 X 1/4' TRANS. TUBE B/□ @ 6' LG	A500 Gr. B
14	3	0054.00565	6 X 8 X 1/4' TRANS. TUBE B/□ @ 3' LG	A500 Gr. B
15	1	0054.09000	6 X 6 x 3/16' BB @ 9'-0' KICKBACK, W/ CAP, & 13° MITER	A500 Gr. B / A36
*16	1	0054.18000	6 X 6 x 3/16' BB @ 9'-0' (THIS PAY ITEM), DRILL 3' CC	A500 Gr. B
17	1	0054.90092	6 X 6 x 3/16' BB TOP TRANS @ 20'-9 5/8' LG W/EXP END	A500 Gr. B
18	1	0054.90093	6 X 6 x 3/16' BB BTM TRANS @ 21'-4 5/8' LG W/EXP END	A500 Gr. B
19	18	0080.03355	3/8' X 7 1/2' BOLT, NUT, & 2 FW	A307, A563 DH, F436
20	19	0080.04100	1/2' x 1-1/2' BOLT, NUT, & FW	A307, A563 DH, F436
21	22	0080.04120	1/2' x 1-1/2' BOLT, NUT, 2 FW & LW	A307, A563 DH, F436
22	4	0080.06255	3/4' X 4-1/2' BOLT, NUT, 2 FW	A325, A563 DH, F436
23	12	0080.06340	3/4' X 7-1/2' BOLT, NUT, 2 FW	A325, A563 DH, F436
24	6	0080.06370	3/4' X 8' CARR BOLT, NUT, FW & LW	A307, A563 DH, F436
25	2	0080.06400	3/4' X 8' BOLT, NUT, 2 FW, & LW	A325, A563 DH, F436

* - WW #4 - SPECIAL LENGTH W/ 16' RADIUS IN PAY ITEM 621.30

HARDWARE NOTES

ITEM #	FUNCTION
19	BOLT RAIL TO SHELF ANGLE (ITEM #10)
20	BOLT SHELF ANGLE (ITEM #'S 10 & 11) TO POST
21	BOLT BLOCK-OUTS (ITEM #'S 13 & 14) TO HEAVY POST
22	(4) PER SPLICE BAR (ITEM #9)
23	(4) PER SPLICE TUBING (ITEM #'S 7 & 8)
24	BOLT RAIL (ITEMS #'S 6,17, & 18 TO BLOCK-OUTS (ITEM #'S 13 & 14) [WHERE FASTENED]
25	BOLT DOUBLE BEND SPLICE TUBE (ITEM #12) TO RAIL (ITEM #18) & KICKBACK (ITEM #15)

APPLICABLE NOTES IN THE BRIDGE RAIL DRAWING SHALL ALSO BE APPLICABLE ON THESE DRAWINGS

ITEM #: 621.725

SHEET 2 OF 5

STRUCTURAL STEEL TO COMPLY W/ ASTM A6

TOLERANCE UNLESS OTHERWISE NOTED:
FRACTIONS = ± 1/16"
ANGLES = ± 1/2°
DIAMETERS = ± 1/32"

GUARD RAIL TO BRIDGE RAIL TRANSITION DETAILS SHEET

TOWN HIGHWAY 46 (IRISH SETTLEMENT ROAD), BRIDGE # 28
TOWN OF CAMBRIDGE, COUNTY OF LAMOILLE, VT.

R E V	NO.	DATE	DESCRIPTION	BY
	1	1/7/15	REVISED PER 12/29/14 MARK-UP	EP

R E V	NO.	DATE	DESCRIPTION	BY

ELDERLEE, INC.
OAKS CORNERS, NEW YORK 14518
E-Mail: dlong@elderlee.com / epeek@elderlee.com
Tel: 315-789-6670 Fax: 315-789-6615

AISC CERTIFIED FABRICATOR

DRAWN	E.P.	12/3/14
CHECKED	D.L.	12/3/14
APPROVED		
SCALE	SCHEMATIC	
DRAWING NO.	F.R.L.-CAMBRIDGE-T	

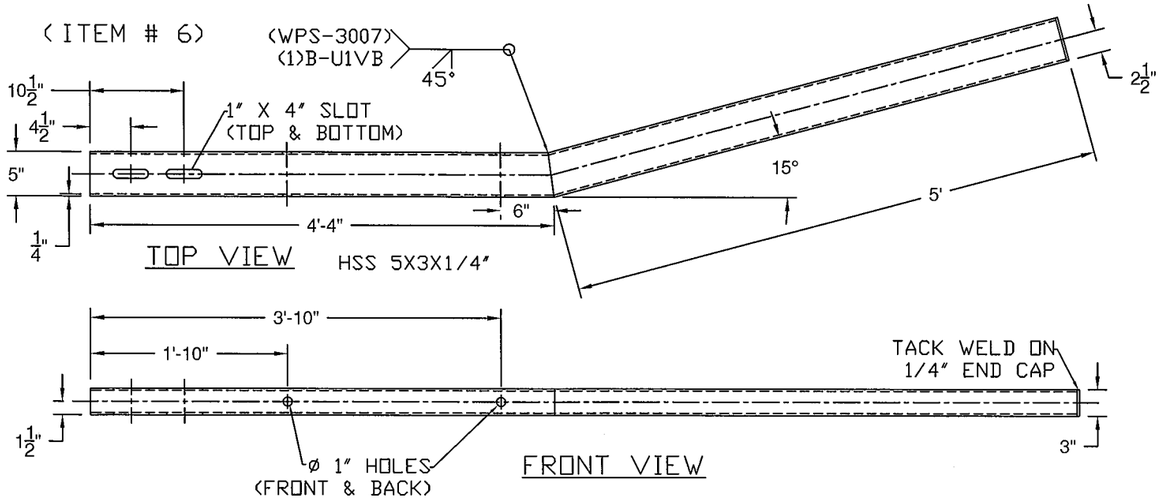

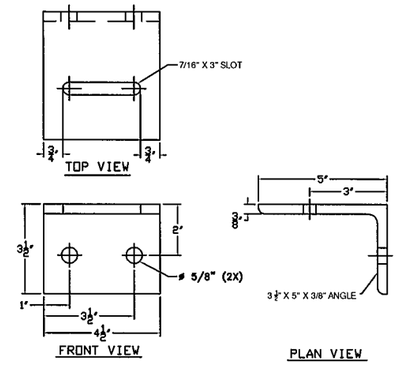

(ITEM # 10)

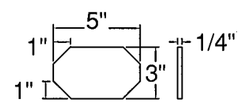

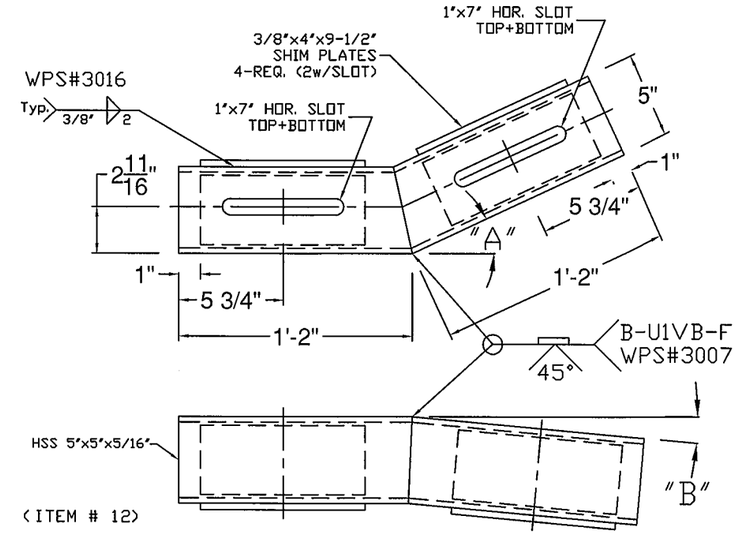

(ITEM # 12)

"A" - 26°
"B" - TURN DOWN ANGLE SET BY THE 9" MEASURMENT AT THE END OF THE BOX BEAM.

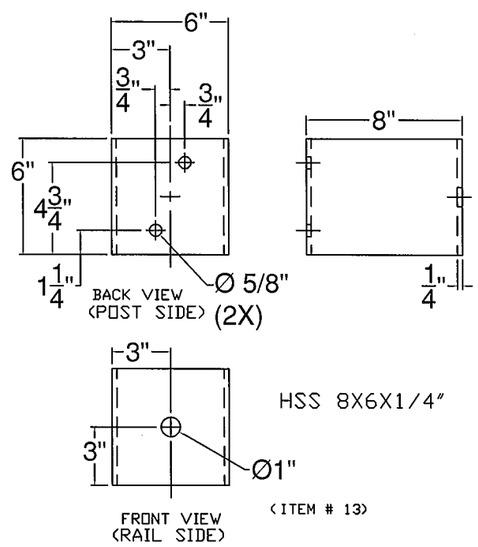

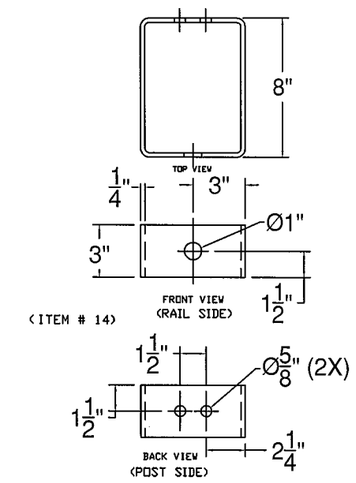

(ITEM # 14)

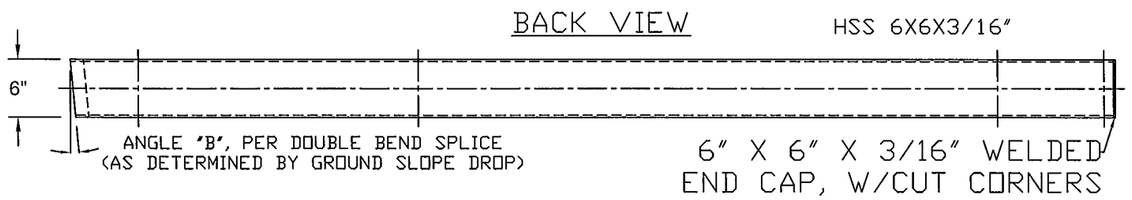

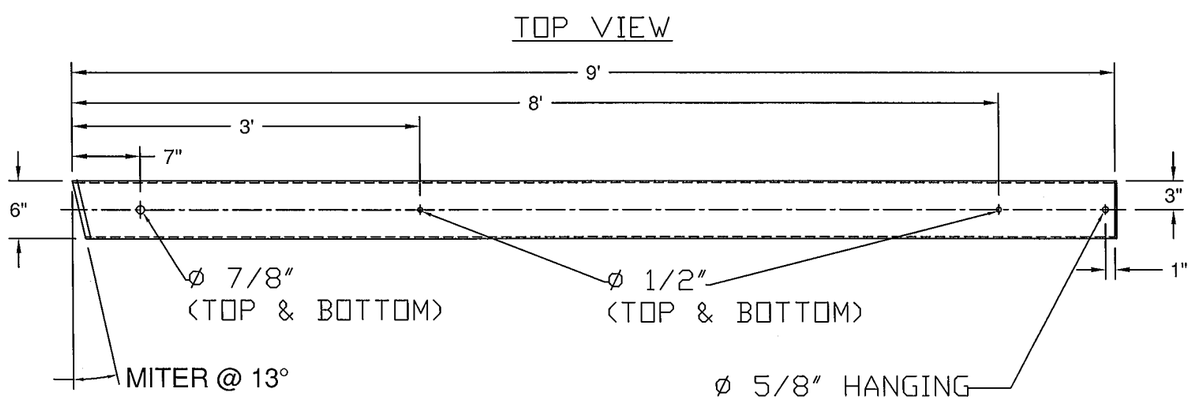

(ITEM # 15)

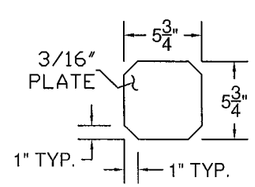

ITEM #: 621.725

SHEET 3 OF 5

STRUCTURAL STEEL TO COMPLY W/ ASTM A6

TOLERANCE UNLESS OTHERWISE NOTED:
FRACTIONS = ± 1/16"
ANGLES = ± 1/2°
DIAMETERS = ± 1/32"

GUARD RAIL TO BRIDGE RAIL TRANSITION DETAILS SHEET

TOWN HIGHWAY 46 (IRISH SETTLEMENT ROAD), BRIDGE # 28
TOWN OF CAMBRIDGE, COUNTY OF LAMOILLE, VT.

REV	NO.	DATE	DESCRIPTION	BY
E	1	1/7/15	REVISED PER 12/29/14 MARK-UP	EP
V				

REV	NO.	DATE	DESCRIPTION	BY
E				
V				

ELDERLEE, INC.
OAKS CORNERS, NEW YORK 14518
E-Mail: dlong@elderlee.com / epeek@elderlee.com
Tel: 315-789-6670 Fax: 315-789-6615

AISC CERTIFIED FABRICATOR

DRAWN	E.P.	12/3/14
CHECKED	D.L.	12/3/14
APPROVED		
SCALE	SCHEMATIC	
DRAWING NO.	F.R.L.-CAMBRIDGE-T	

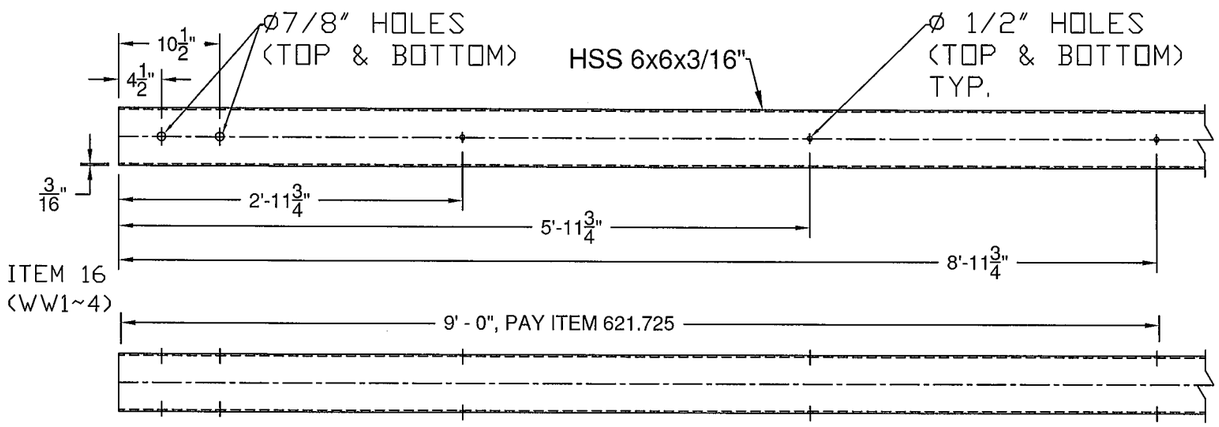

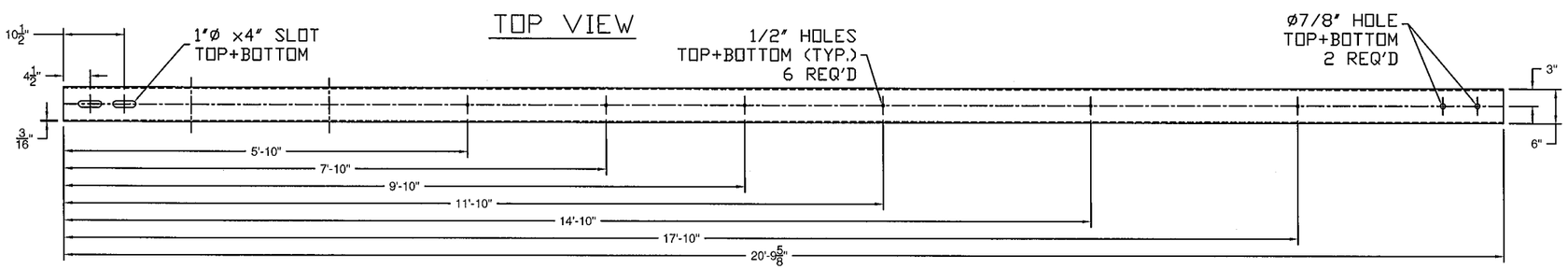

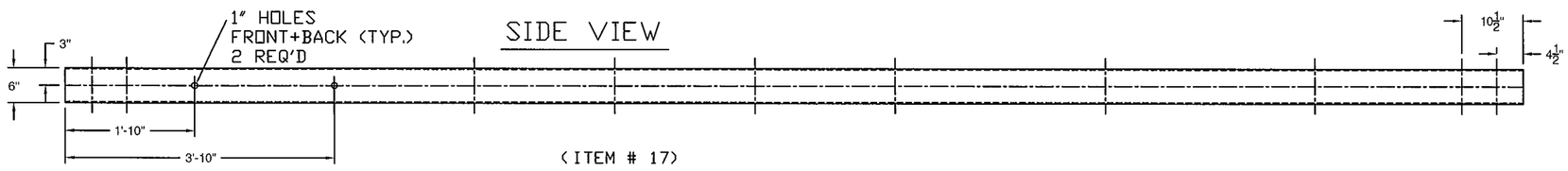

(ITEM # 17)

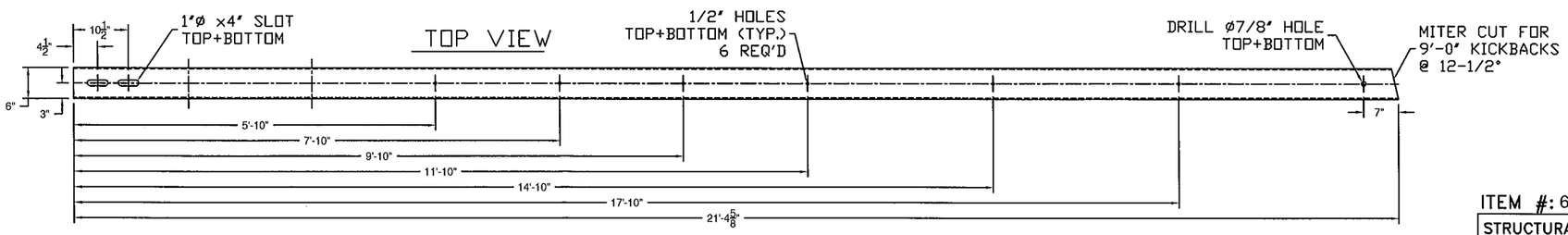

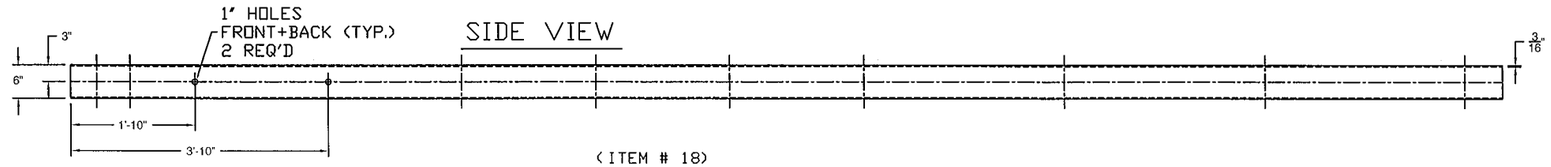

(ITEM # 18)

ITEM #: 621.725

SHEET 4 OF 5

STRUCTURAL STEEL TO COMPLY W/ ASTM A6

TOLERANCE UNLESS OTHERWISE NOTED:
FRACTIONS = ± 1/16"
ANGLES = ± 1/2°
DIAMETERS = ± 1/32"

GUARD RAIL TO BRIDGE RAIL TRANSITION DETAILS SHEET

TOWN HIGHWAY 46 (IRISH SETTLEMENT ROAD), BRIDGE # 28
TOWN OF CAMBRIDGE, COUNTY OF LAMOILLE, VT.

REV	NO.	DATE	DESCRIPTION	BY
	1	1/7/15	REVISED PER 12/29/14 MARK-UP	EP

REV	NO.	DATE	DESCRIPTION	BY

ELDERLEE, INC.
OAKS CORNERS, NEW YORK 14518
E-Mail: dlong@elderlee.com / epeek@elderlee.com
Tel: 315-789-6670 Fax: 315-789-6615

AISC CERTIFIED FABRICATOR

DRAWN	E.P.	12/3/14
CHECKED	D.L.	12/3/14
APPROVED	.	.
SCALE	SCHEMATIC	
DRAWING NO.	F.R.L.-CAMBRIDGE-T	

SPLICE BAR - EXPANSION

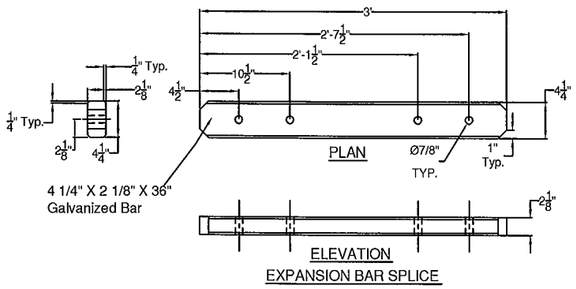

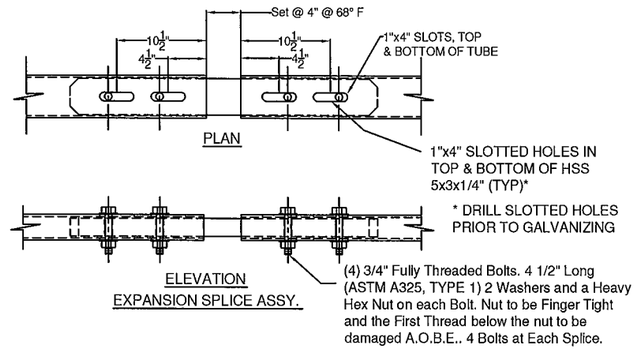

(ITEM # 9)

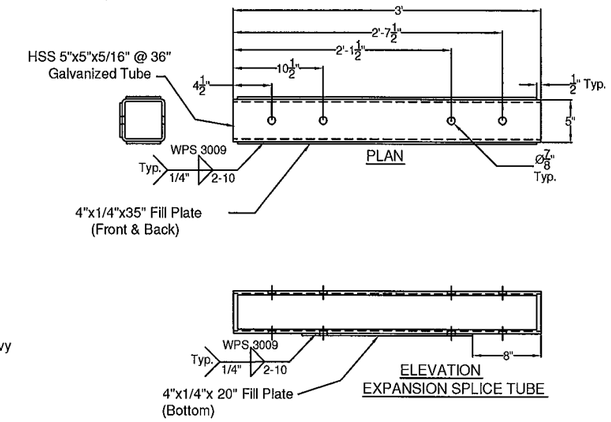

SPLICE TUBE - EXPANSION

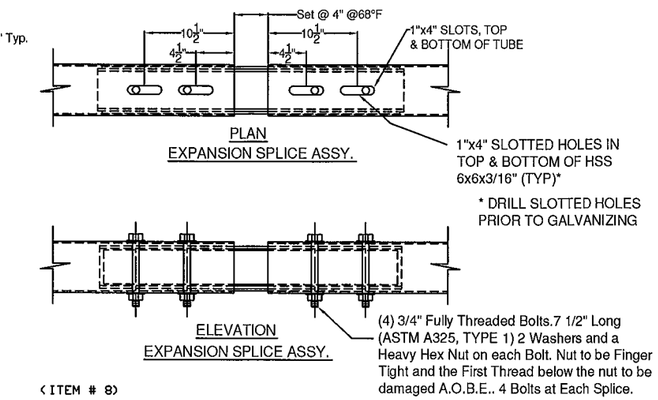

(ITEM # 8)

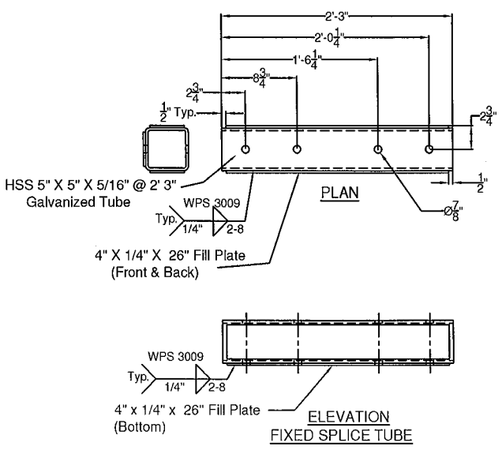

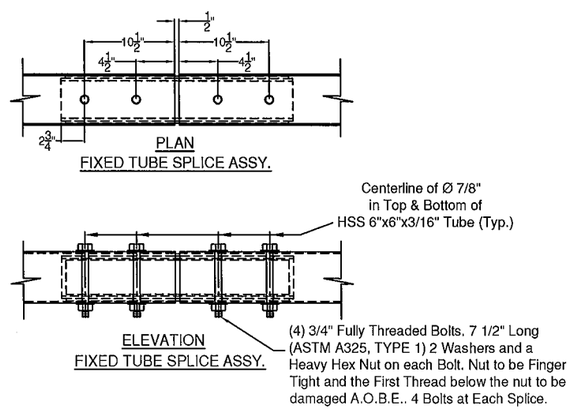

(ITEM # 7)

SPLICE TUBE - FIXED

ITEM #: 621.725

SHEET 5 OF 5

STRUCTURAL STEEL TO COMPLY W/ ASTM A6

TOLERANCE UNLESS OTHERWISE NOTED:
FRACTIONS = ± 1/16"
ANGLES = ± 1/2°
DIAMETERS = ± 1/32"

GUARD RAIL TO BRIDGE RAIL TRANSITION DETAILS SHEET

TOWN HIGHWAY 46 (IRISH SETTLEMENT ROAD), BRIDGE # 28
TOWN OF CAMBRIDGE, COUNTY OF LAMOILLE, VT.

REV	NO.	DATE	DESCRIPTION	BY
	1	1/7/15	REVISED PER 12/29/14 MARK-UP	EP

REV	NO.	DATE	DESCRIPTION	BY

ELDERLEE, INC.
OAKS CORNERS, NEW YORK 14518
E-Mail: dlong@elderlee.com / epeek@elderlee.com
Tel: 315-789-6670 Fax: 315-789-6615

AISC CERTIFIED FABRICATOR

DRAWN	E.P.	12/3/14
CHECKED	D.L.	12/3/14
APPROVED	.	.
SCALE	SCHEMATIC	
DRAWING NO.	F.R.L.-CAMBRIDGE-T	