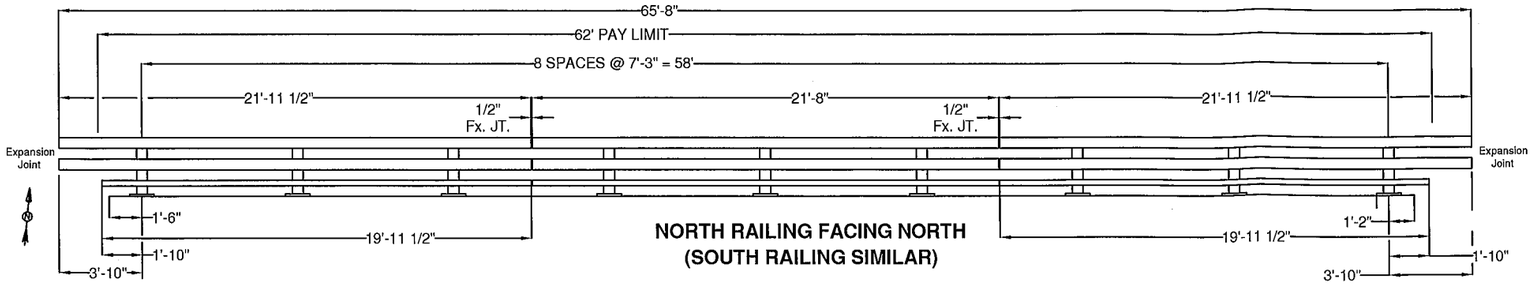

NORTH RAILING FACING NORTH
(SOUTH RAILING SIMILAR)

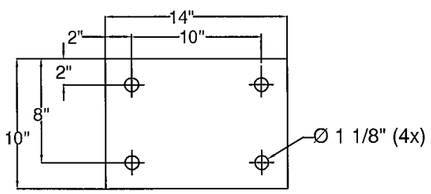

1/8" FABRIC PAD

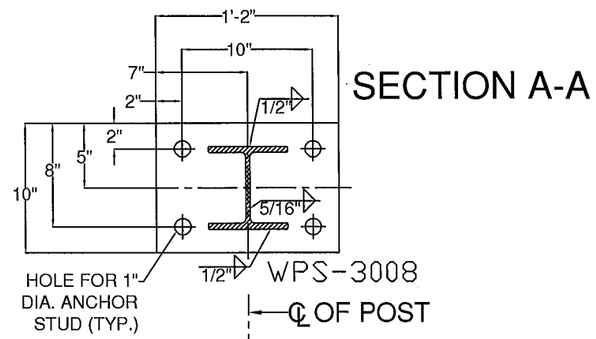

SECTION A-A

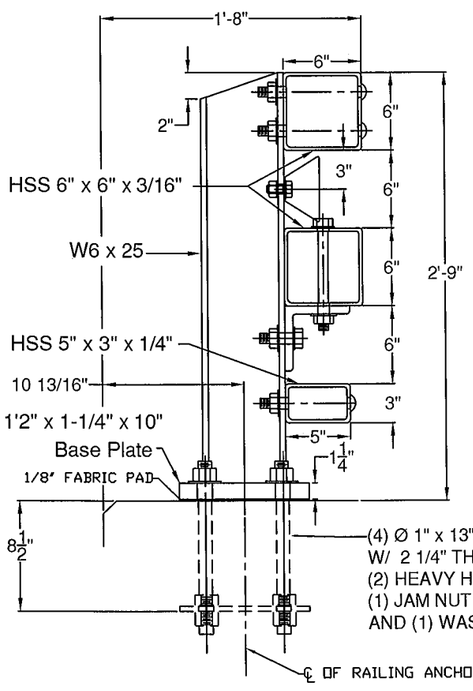

SECTION

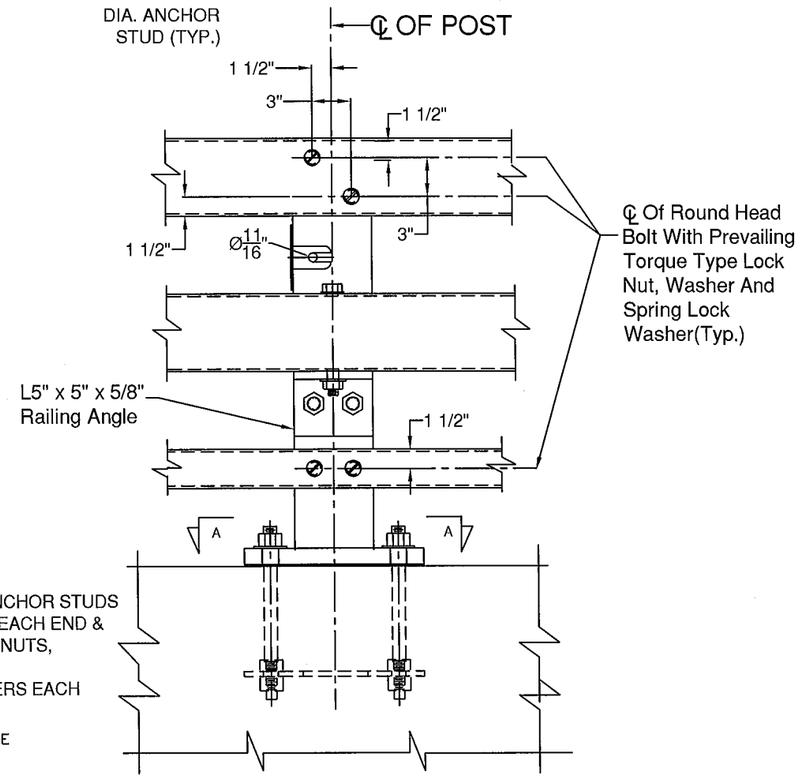

ELEVATION

STEEL BRIDGE RAILING

BILL OF MATERIAL

ITEM #	QTY	PART #	DESCRIPTION	ASTM DESIGNATION
1	18	0033.03610	W6x25, THREE RAIL POST @ 2'-9" DA DN 1 1/4x10x1'-2" B.P.	A572 Gr. 50
2	4	0033.91283	HSS 3" X 5" X 1/4" RAIL @ 19'-11 1/2"	A500 Gr. B
3	2	0033.91284	HSS 3" X 5" X 1/4" RAIL @ 21'-8"	A500 Gr. B
5	8	0033.91285	HSS 6" X 6" X 3/16" RAIL @ 21'-11 1/2"	A500 Gr. B
6	4	0033.91286	HSS 6" X 6" X 3/16" RAIL @ 21'-8"	A500 Gr. B
8	4	0033.00840	2-1/8" X 4-1/4" FIX. SPLICE BAR @ 2'-3"	A572 Gr. 50
9	8	0033.00640	HSS 5" X 5" X 5/16" FIX. SPLICE TUBE @ 2'-3"	A500 Gr. B, A572 Gr. 50
10	18	0033.00220	3/8" X 10" X 14" ANCHOR PLATES	A572 Gr. 50
11	18	0033.90050	1/8" X 10" X 14" FABRIC PAD	AASHTO M251
12	74*	0042.21013	Ø 1" X 13" ANCHOR STUDS, W/ 2 1/4" THD. EACH END	A449 TYPE 1
13	146*	0080.18901	Ø 1" HEAVY HEX NUTS	A563
14	72	0080.18911	Ø 1" FLAT WASHERS	F436
15	72	0080.18905	Ø 1" HEX JAM NUTS	A563
16	72	0080.07500	Ø 7/8" X 8" ROUND HEAD BOLT, NUT, SQ. WASHER, L.W.	A449, A563, F436, ASME D18.2
17	18	0080.06400	Ø 3/4" X 8" HEX BOLT, NUT, (2) F.W., & L.W.	A325, A563, F436, & ASME D18.2
18	36	0080.06140	Ø 3/4" X 2-3/4" HEX BOLT, NUT, (2) F.W., & L.W.	A325, A563, F436, & ASME D18.2
19	32	0080.06340	Ø 3/4" X 7-1/2" HEX BOLT, NUT, & (2) F.W.	A325, A563, & F436
20	16	0080.06255	Ø 3/4" X 4-1/2" HEX BOLT, NUT, & (2) F.W.	A325, A563, & F436
21	18	0033.00500	L5" X 5" X 5/8" RAILING ANGLE @ 6'	A572 Gr. 50
22	6		DELINEATORS - NOT SHOWN	(SUPPLIED BY CUSTOMER)

*-2 EXTRA FOR VDAT TESTING

GENERAL NOTES:

1) ALL RAILING IS TO BE FABRICATED AND ERECTED ACCORDING TO SECTION 525 OF THE STANDARD SPECIFICATIONS.
2) PRIOR TO GALVANIZING THE ASSEMBLED POST, GRIND ALL EDGES TO A MINIMUM RADIUS OF 1/16".
3) ALL POST SHALL BE SET NORMAL TO GRADE. THE MAXIMUM CENTER TO CENTER SPACING OF BRIDGE RAIL POST IS 8' 3".
4) SECTIONS OF RAIL TUBE SHALL BE ATTACHED TO A MINIMUM OF TWO BRIDGE POSTS AND PREFERABLY TO AT LEAST 4 POSTS.
5) RAIL TUBE EXPANSION JOINTS SHALL BE PROVIDED IN ANY RAIL BAY SPANNING THE END OF AN INTEGRAL ABUTMENT BRIDGE AND AT ALL SUPER STRUCTURE EXPANSION JOINTS. EXPANSION JOINT WIDTH SHALL BE 4"@ 68°F AND WILL BE ADJUSTED IN THE FIELD BY THE ENGINEER FOR OTHER TEMPERATURES.
6) STD. SPLICE HOLES ONLY IN BRIDGE RAIL TUBES. REST TO BE DRILLED BY CUSTOMER. FIELD DRILLED HOLES TO BE COATED WITH AN APPROVED ZINC-RICH PAINT PRIOR TO INSTALLATION.
7) BOLTS SHALL BE TORQUED SNUG TIGHT (APPROXIMATELY 100 FT-LB).
8) SEE STANDARD DRAWING G-I FOR DETAILS OF DELINEATORS. A DELINEATOR SHALL BE INSTALLED AT 30 FOOT SPACING OR THE NEAREST POST. WHITE IS TO BE INSTALLED ON THE DRIVER'S RIGHT. FOR ONE WAY BRIDGES, YELLOW IS TO BE INSTALLED ON THE DRIVER'S LEFT. PAYMENT FOR DELINEATORS SHALL BE INCIDENTAL TO OTHER ITEMS.
9) ANY BENDING OF RAIL SHALL BE DONE AT THE FABRICATION PLANT ACCORDING TO A PROCEDURE PROVIDED BY THE FABRICATOR.
10) THE MINIMUM DISTANCE FROM THE POST TO AN EXPANSION JOINT SHALL BE DETERMINED BY THE MINIMUM EDGE DISTANCE OF 5" FROM ANY ANCHOR STUD TO THE END OF THE SLAB, OR THE EXPANSION JOINT RECESS POUR, IF ONE IS USED.
11) PROTRUSIONS CAUSED BY WELDING OR GALVANIZING ARE NOT PERMITTED ON THE ADJOINING SURFACES OF THE BOX BEAM RAILS, SPLICE TUBES AND FILL PLATES.
12) THIS RAILING MEETS THE REQUIREMENTS FOR A TL-4 SERVICE LEVEL.

ITEM #: 525.335

SHEET 1 OF 2

STRUCTURAL STEEL TO COMPLY W/ ASTM A6

TOLERANCE UNLESS OTHERWISE NOTED:
FRACTIONS = ± 1/16"
ANGLES = ± 1/2°
DIAMETERS = ± 1/32"

BRIDGE RAIL DETAILS SHEET

TOWN HIGHWAY 46 (IRISH SETTLEMENT ROAD), BRIDGE # 28
TOWN OF CAMBRIDGE, COUNTY OF LAMOILLE, VT.

REV	NO.	DATE	DESCRIPTION	BY	REV	NO.	DATE	DESCRIPTION	BY

ELDERLEE, INC.
OAKS CORNERS, NEW YORK 14518
E-Mail: dlong@elderlee.com, epeek@elderlee.com
Tel: 315-789-6670 Fax: 315-789-6615

AISC CERTIFIED FABRICATOR

DRAWN	E.P.	11/21/14
CHECKED	D.L.	11/21/14
APPROVED	.	.
SCALE	SCHEMATIC	
DRAWING NO.	F.R. LaFAYETTE-CAMBRIDGE	

SPLICE BAR - FIXED

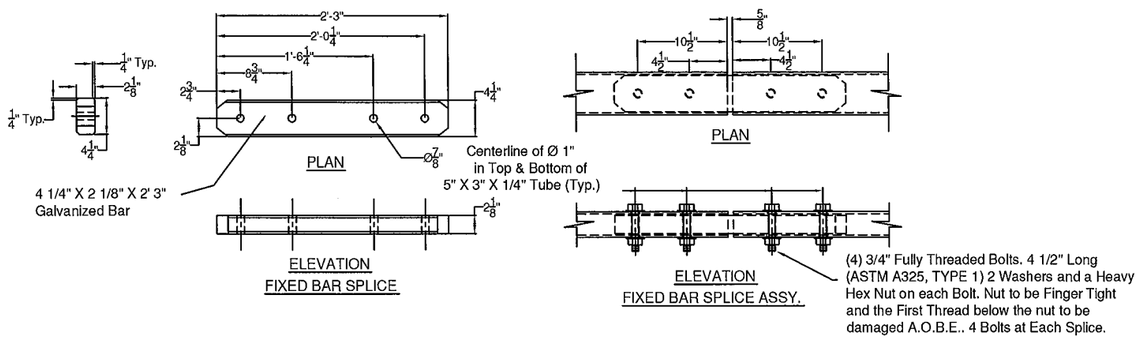

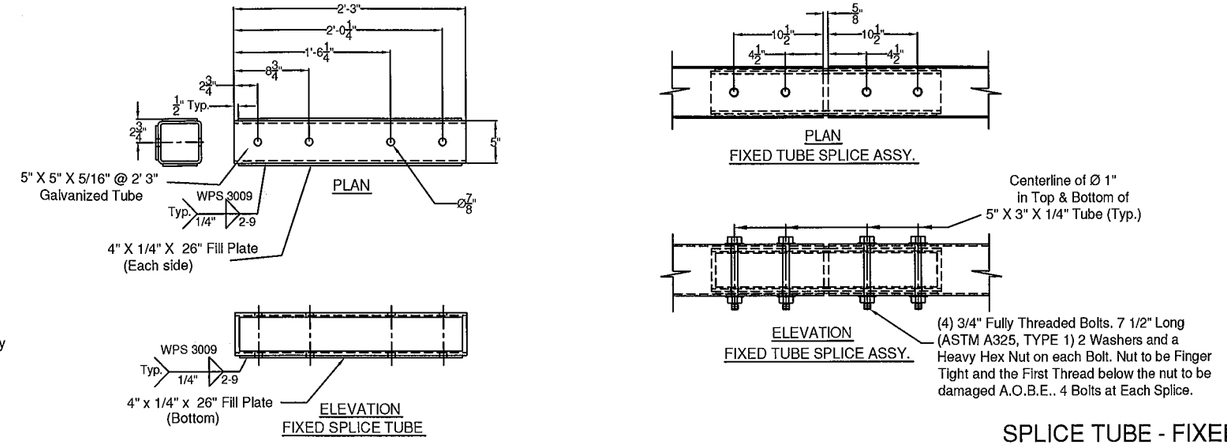

SPLICE TUBE - FIXED

BRIDGE POST DETAIL

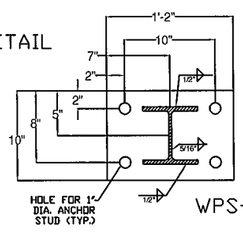

WPS-3008

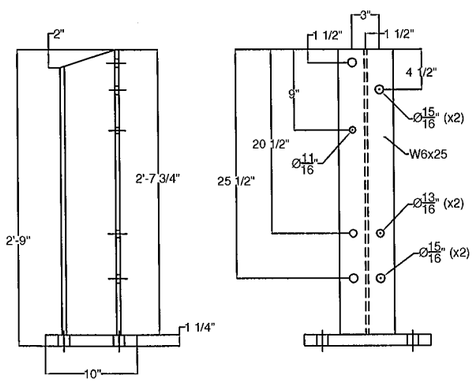

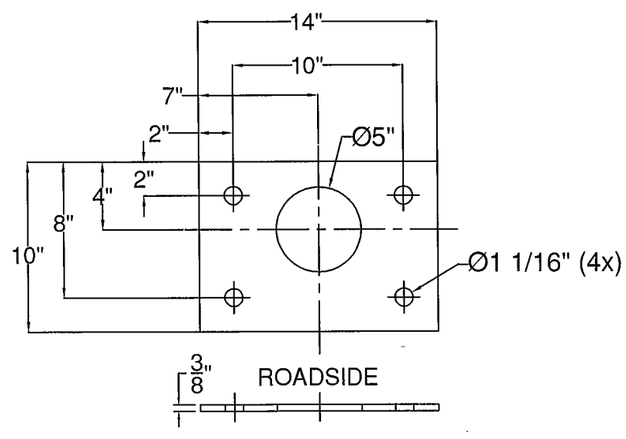

ANCHOR PLATE

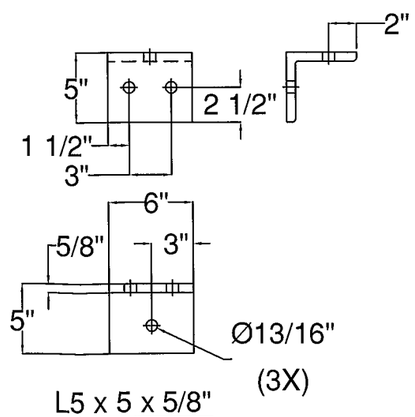

L5 x 5 x 5/8"
RAILING ANGLE

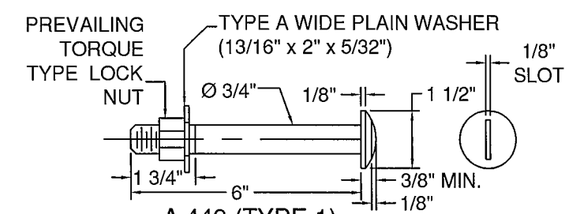

A 449 (TYPE 1)
ROUND HEAD BOLT

ITEM #: 525.335

STRUCTURAL STEEL TO COMPLY W/ ASTM A6

TOLERANCE UNLESS OTHERWISE NOTED:
FRACTIONS = ± 1/16"
ANGLES = ± 1/2°
DIAMETERS = ± 1/32"

SHEET 2 OF 2

BRIDGE RAIL DETAILS SHEET

TOWN HIGHWAY 46 (IRISH SETTLEMENT ROAD), BRIDGE # 28
TOWN OF CAMBRIDGE, COUNTY OF LAMOILLE, VT.

REV	NO.	DATE	DESCRIPTION	BY	REV	NO.	DATE	DESCRIPTION	BY

ELDERLEE, INC.
OAKS CORNERS, NEW YORK 14518
E-Mail: dlong@elderlee.com, epeek@elderlee.com
Tel: 315-789-6670 Fax: 315-789-6615

AISC CERTIFIED FABRICATOR

DRAWN	E.P.	11/21/14
CHECKED	D.L.	11/21/14
APPROVED		
SCALE	SCHEMATIC	
DRAWING NO.	F.R. LaFAYETTE-CAMBRIDGE	

WELDING PROCEDURE SPECIFICATION

PQR ELDERLEE#1

Material Specification	A572 GRD. 50 /A992-06a
Welding Process	FCAW
Manual or Machine	SEMAUTOMATIC
Position of Welding	FLAT/HORIZONTAL
Filler Metal Specification	A5.20
Filler Metal Classification	E70 LINCOLN OUTERSHEILD
Flux	N/A
Shielding Gas	CO 2 Dew Point -40DEG F Flow Rate 50 CFM (45 TO 63 CFM)
Single or Multiple Pass	SINGLE
Single or Multiple Arc	N/A
Welding Current	DC
Polarity	DCEP
Welding Progression	STRINGER
Root Treatment	PER D1.5
Preheat and Interpass Temperature	PER D1.5
Postheat Temperature	NONE
Heat Input	Min _____ Max _____

WELDING PROCEDURE

Pass no.	Electrode size	Welding Current Amperes	Welding Current Volts	Travel speed	Joint detail
1	3/32	390	27	12	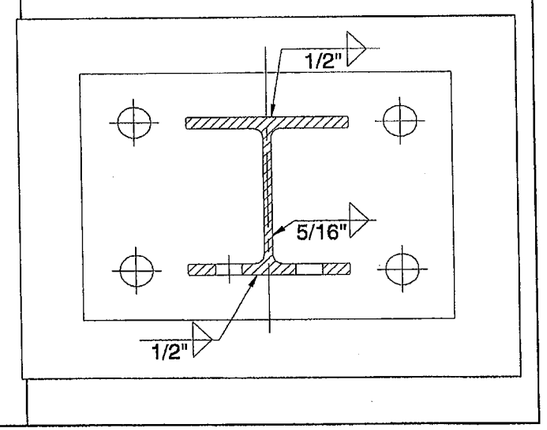
Variable	LIMITS	351 TO 429	25 TO 29	11 TO 13	

This procedure may vary due to fabrication sequence, fit-up, pass size, etc., within the limitation of variables given in Section 5.

Procedure No.	3008	Contractor	Elderlee, Inc.
Revision No.		Authorized By	RANDY SCOTT
		Date	5/29/2013

WELDING PROCEDURE SPECIFICATION

PQR ELDERLEE #3

Material Specification	A709 TO A500 GR B
Welding Process	FCAW-G
Manual or Machine	SEMAUTOMATIC
Position of Welding	FLAT/HORIZONTAL
Filler Metal Specification	A5.29
Filler Metal Classification	E81T1-Ni1C-JH4
Flux	N/A
Shielding Gas	CO 2 Dew Point -40DEG F Flow Rate 50CFH
Single or Multiple Pass	SINGLE
Single or Multiple Arc	SINGLE
Welding Current	DC
Polarity	REVERSE ELECTRODE POSITIVE
Welding Progression	STRINGER
Root Treatment	D1.5
Preheat and Interpass Temperature	D1.5
Postheat Temperature	NONE
Heat Input	Min Max

WELDING PROCEDURE

Pass no.	Electrode size	Welding Current Amperes	Welding Current Volts	Travel speed	Joint detail
1	1/16	310	25	11	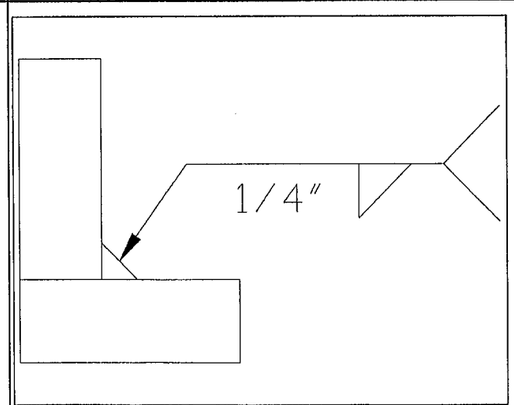
Variable	LIMITS	341 TO 269	27 TO 23	12 TO 10	

This procedure may vary due to fabrication sequence, fit-up, pass size, etc., within the limitation of variables given in Section 5.

Procedure No. 3009

Revision No.

Contractor Elderlee, Inc.

Authorized By RANDY SCOTT

Date 3/20/2014